ARMY TM 9-2320-365-24P
AIR FORCE T.O. 36A12-1B-1095-24
*Supersedes copy dated February 1996.

UNIT, DIRECT SUPPORT, AND GENERAL SUPPORT MAINTENANCE REPAIR PARTS AND SPECIAL TOOLS LIST FOR M1078 SERIES, 2-1/2-TON, 4X4, LIGHT MEDIUM TACTICAL VEHICLE (LMTV)

MODEL	NSN	EIC
TRK, CAR., LMTV, M1078		
W/WN	2320-01-360-1898	BHH
W/O WN	2320-01-354-3385	BHD
TRK, VAN, LMTV, M1079		
W/WN	2320-01-360-1891	BHG
W/O WN	2320-01-354-3384	BHE
TRK, CHAS, LMTV, M1080	2320-01-353-9098	BHC
TRK, CAR., LMTV, AIRDROP, M1081		
W/WN	2320-01-360-1899	BHJ
W/O WN	2320-01-355-3064	BHF

DISTRIBUTION STATEMENT A. Approved for public release; distribution is unlimited.

HEADQUARTERS, DEPARTMENTS OF THE ARMY AND THE AIR FORCE

JUNE 1998

TECHNICAL MANUAL
NO. 9-2320-365-24P

TECHNICAL ORDER
NO. 36A12-1B-1095-24

HEADQUARTERS
DEPARTMENTS OF THE ARMY
AND THE AIR FORCE
Washington D.C., 17 June 1998

UNIT, DIRECT SUPPORT, AND
GENERAL SUPPORT MAINTENANCE
REPAIR PARTS AND SPECIAL TOOLS LIST
FOR

M1078 SERIES, 2-1/2-TON, 4X4
LIGHT MEDIUM TACTICAL VEHICLE (LMTV)

MODEL	NSN	EIC
Trk, Car., LMTV, M1078		
W/WN	2320-01-360-1898	BHH
W/O WN	2320-01-354-3385	BHD
TRK, VAN, LMTV, M1079		
W/WN	2320-01-360-1691	BHG
W/O WN	2320-01-354-3384	BHE
Trk, Chas, LMTV, M1080	2320-01-353-9098	BHC
Trk, Car., LMTV, AIRDROP, M1081		
W/WN	2320-01-360-1899	BHJ
W/O WN	2320-01-355-3064	BHF

REPORTING ERRORS AND RECOMMENDING IMPROVEMENTS

You can help improve this manual. If you find any mistakes or if you know a way to improve the procedures, please let us know. Mail your letter, DA Form 2028 (Recommended Changes to Publications and Blank Forms), or DA Form 2028-2 located in the back of this manual directly to: Commander, U.S. Army Tank-Automotive and Armament Command, ATTN: AMSTA-AC-NMLI, Rock Island, Illinois 61299. A reply will be furnished to you.

DISTRIBUTION STATEMENT A. Approved for public release; distribution is unlimited.

*This publication supersedes TM 9-2320-365-24P dated 27 February 1996.

TABLE OF CONTENTS

	Page	Illus./ Figure
Section I. INTRODUCTION	1	
Section I I. REPAIR PARTS LIST		
Group 01 Engine		
0100 Dressed Engine with Container	1-1	1
0100 Engine Mounts	2-1	2
0100 Engine Brackets	3-1	3
0101 Cylinder Head with Valves and Gasket	4-1	4
0101 Cylinder Block	5-1	5
0102 Crankshaft	6-1	6
0102 Pulley and Dampener	7-1	7
0103 Flywheel Housing and Flex Plates	8-1	8
0104 Piston and Push Rods	9-1	9
0105 Idler Gear	10-1	10
0105 Camshaft	11-1	11
0105 Front and Side Housing Covers and Cam Followers	12-1	12
0105 Valve Cover and Gasket	13-1	13
0105 Rocker Arms..	14-1	14
0105 Push Rods, Valves, Valve Springs	15-1	15
0106 Oil Cooler	16-1	16
0106 Oil Pan and Oil Pump	17-1	17
0106 Oil Hoses and Tubes	18-1	18
0106 Engine Oil Sampling Valve	19-1	19
0106 Engine Oil Filter and Filter Base	20-1	20
0106 Engine Oil Dipstick and Filler Tube	21-1	21
0106 Crankcase Breather	22-1	22
0108 Inlet Manifold, Gasket and Cover	23-1	23
0108 Exhaust Manifold	24-1	24
Group 03 Fuel System		
0301 Fuel Injector	25-1	25
0304 Air Cleaner	26-1	26
0305 Turbocharger	27-1	27
0305 Charge Air Cooler, Pipes, Brackets and Hoses	28-1	28
0306 Fuel Regulating Valve, Tubes, Fittings and Hoses	29-1	29
0306 Fuel Tank, Clamps and Brackets	30-1	30
0308 Governor and Fuel Transfer	31-1	31
0308 Fuel Control Linkage	32-1	32
0309 Fuel Filter	33-1	33
0309 Fuel/Water Separator	34-1	34
0311 Ether Starting Aid	35-1	35
0312 Accelerator, Hand Throttle and Linkage	36-1	36
Group 04 Exhaust System		
0401 Exhaust Pipe Heat Shield	37-1	37
0401 Exhaust Pipes, Brackets and Clamps	38-1	38
0401 Muffler, Ejector, Clamps and Brackets	39-1	39
0401 Muffler Heat Shield, Clamps and Resilient Mounts	40-1	40
Group 05 Cooling System		
0501 Radiator, Overflow Tank, Hoses and Fittings	41-1	41

	Page	Illus./ Figure
Group 05 Cooling System (continued)		
0502 Radiator Fan Shroud.	42-1	42
0503 Thermostat and Cooling Tubes	43-1	43
0504 Water Pump and Drive	44-1	44
0505 Engine Fan and Clutch Assembly	45-1	45
Group 06 Electrical System		
0601 100 AMP Alternator and Regulator..	46-1	46
0603 Starting Motor and Solenoid	47-1	47
0603 Auxiliary Starter Solenoid	48-1	48
0606 Fuel Shutoff Solenoid	49-1	49
0607 Instrument Panel	50-1	50
0607 Auxiliary Panel and Switches	51-1	51
0607 WTEC II Dashboard Cable Assembly and Power Distribution Panel	52-1	52
0607 WTEC III Dashboard Cable Assembly and Power Distribution Panel	53-1	53
0608 Turn Signal Control	54-1	54
0608 Flasher Unit	55-1	55
0608 Fan Solenoid	56-1	56
0608 CTIS ECU, ECU Dimmer Module, and Frequency ECU	57-1	57
0608 100A Reverse Polarity Relay and Starter Shunt	58-1	58
0609 Headlamp Assembly	59-1	59
0609 Composite Taillight Assembly	60-1	60
0609 Cab and Door Clearance and Marker Lights	61-1	61
0609 Chassis Clearance and Marker Lights	62-1	62
0609 Backup Light	63-1	63
0609 Blackout Drive Light	64-1	64
0609 Composite Front Light Assembly	65-1	65
0610 Sensors, Switches and Transducers	66-1	66
0610 Air Brakes Pneumatic Switch	67-1	67
0611 Horn	68-1	68
0612 Batteries, Battery Box and Cables	69-1	69
0613 Engine Cable Routing Clamps and Insulators	70-1	70
0613 Engine Control Cable Assembly	71-1	71
0613 STE/ICE Cable Assembly.	72-1	72
0613 12 Pin Intervehicle Cable	73-1	73
0613 Transmission Wiring Harness	74-1	74
0613 WTEC III Transmission Wiring Harness	75-1	75
0613 Windshield Washer Pump/EM1 Cable	76-1	76
0613 7 Pin Intervehicle Cable	77-1	77
0613 Cab Cable Routing Clamps and Brackets	78-1	78
0613 Warning Light Cable Assembly	79-1	79
0613 Door and Cab Marker Light Cable Assembly	80-1	80
0613 Air Drop Cab Clearance and Marker Lights Lower Cable Assembly	81-1	81
0613 Air Drop Cab Clearance and Marker Lights Upper Cable Assembly	82-1	82
0613 Winch Control Cable Assembly	83-1	83
0613 Rear Lights Cable Assembly	84-1	84
0613 Front Lights Cable Assembly	85-1	85
0613 Start and Charge Cable Assembly	86-1	86
0613 PTO Cable Assembly	87-1	87

	Page	Illus./ Figure
Group 06 Electrical System (continued)		
0613 Door Ajar, Marker and Blackout Control Cable Assembly..	88-1	88
0613 Windshield Wiper EMI Cable Assembly	89-1	89
0613 Chemical Kit Cable Assembly	90-1	90
0613 Starter Ground Cable Assembly	91-1	91
0613 24V Reverse Polarity Relay Cable Assembly	92-1	92
0613 24V Alternator Cable Assembly	93-1	93
0613 24V Power Distribution Panel Cable Assembly..	94-1	94
0613 12V Power Distribution Panel Cable Assembly..	95-1	95
0613 Power Distribution Panel Ground Cable Assembly..	96-1	96
0613 Starter Power Cable Assembly	97-1	97
0613 Battery Ground Cable Assembly	98-1	98
0613 12V Alternator Cable Assembly..	99-1	99
0613 12V Reverse Polarity Relay Cable Assembly	100-1	100
0613 Clearance Light Cable Assembly	101-1	101
0613 Starter to Chassis Ground Cable and Clamps	102-1	102
0613 CTIS Cable Assembly..	103-1	103
0613 Auxiliary Panel Cable Assembly	104-1	104
Group 07 Transmission		
0705 WTEC II Transmission Electronic Control Unit	105-1	105
0705 WTEC II Vehicle Interface Module	106-1	106
0705 WTEC III Transmission Gear Selector	107-1	107
0705 WTEC III Transmission Electronic Control Unit	108-1	108
0708 Torque Converter Module	109-1	109
0710 Transmission with Container	110-1	110
0710 Transmission Mounts	111-1	111
0710 Transmission Dipstick	112-1	112
0710 Front Support Assembly	113-1	113
0710 P1 Planetary Carrier..	114-1	114
0710 P2 Planetary Carrier	115-1	115
0710 P3 Planetary Carrier	116-1	116
0710 Converter Housing Module..	117-1	117
0710 Mainshaft Module..	118-1	118
0710 Adapter Housing Module	119-1	119
0713 C3, C4 and C5 Clutch	120-1	120
0713 Rotating Clutch Module	121-1	121
0714 Control Valve Module..	122-1	122
0721 Transmission Oil Filters	123-1	123
0721 Transmission Oil Filler Tube and Cooler..	124-1	124
0721 Scavenge Pump, Hose and Fittings..	125-1	125
0721 Transmission Oil Sampling Valve	126-1	126
Group 08 Transfer and Final Drive Assembly		
0801 Transfer Case Module	127-1	127
Group 09 Propeller Shafts/Universal Joints Assembly		
0900 Driveshafts	128-1	128
Group 10 Front Axles		
1000 Front Axle and Wheel End Assembly	129-1	129
1002 Front Axle Differential Carrier	130-1	130
Group 11 Rear Axles		
1100 Rear Axle and Wheel End Assembly	131-1	131
1102 Rear Axle Differential Carrier	132-1	132

	Page	Illus./ Figure
Group 12 Brakes		
1202 Front Brake Assembly	133-1	133
1202 Rear Brake Assembly	134-1	134
1208 Front Gladhands, Hoses and Fittings	135-1	135
1208 Rear Gladhands, Hoses and Fittings	136-1	136
1208 Front Axle Quick Release Valve, Hoses, Clamps and Fittings..	137-1	137
1208 Air Tanks, Clamps, Hoses and Fittings	138-1	138
1208 CTIS Quick Release Valves, Hoses and Fittings	139-1	139
1208 Load Sensing Valve, Hoses and Fittings	140-1	140
1208 Air Brake Protection Valve, Hoses and Fittings	141-1	141
1208 Anti-Compounding Relay Valve, Hoses, and Fittings	142-1	142
1208 Air Relay Valve, Hoses and Fittings	143-1	143
1208 Two Way Check Valve, Hoses and Fittings	144-1	144
1208 Inversion Valve, Hoses and Fittings	145-1	145
1208 Rear Brake Hoses, Brackets and Fittings	146-1	146
1208 Rear Brake Hose Clamps and Brackets	147-1	147
1208 Pneumatic Hose Routing Loop Clamps and Brackets	148-1	148
1208 Brake Pedal, Foot Control Valve, Hoses and Fittings	149-1	149
1208 Park and Trailer Air Supply Valves, Hoses and Fittings..	150-1	150
1208 Low Pressure Transmitter Two Way Check Valves, Hoses and Fittings	151-1	151
1208 Park Control, Emergency/Service Glandhand Two Way Check Valve, Hoses and Fittings	152-1	152
1208 Manifold Valve, Hoses and Fittings	153-1	153
1209 Air Compressor	154-1	154
Group 13 Wheels		
1311 Wheel Assembly and CTIS Valve	155-1	155
1313 Tire	156-1	156
Group 14 Steering		
1401 Tie Rod and Tie Rod Ends	157-1	157
1401 Steering Wheel and Column	158-1	158
1407 Steering Gear, Pitman Arm and Drag Link	159-1	159
1410 Power Steering Pump	160-1	160
1411 Power Steering Hoses	161-1	161
1413 Power Steering Reservoir	162-1	162
Group 15 Frame		
1501 M1078, M1079, M1080 Frame Assembly	163-1	163
1501 M1081 Frame Assembly	164-1	164
1501 Rear Light Carrier	165-1	165
1501 Airdrop Parachute Suspension Assembly	166-1	166
1501 Front Bumper and Gravel Deflector	167-1	167
1501 Front Lift Beam	168-1	168
1501 Air Drop Extraction Assembly	169-1	169
1501 Air Drop Extraction Assembly Brackets	170-1	170
1503 Pintle Hook..	171-1	171
1504 Spare Tire Retainer	172-1	172

	Page	Illus./ Figure
Group 16 Springs and Shocks		
1601 Front Leaf Spring Suspension	173-1	173
1601 Front Resilient Mount and Angle Brackets	174-1	174
1601 Rear Leaf Spring and Torque Rods	175-1	175
1601 Rear Resilient Mount and Mechanical Stop	176-1	176
1604 Front Shocks	177-1	177
1604 Rear Shocks	178-1	178
1605 Rear Stabilizer Bar	179-1	179
Group 18 Body and Cab		
1801 Standard Cab Assembly, Doors, and Hinges	180-1	180
1801 Air Drop Cab Assembly, Doors, and Hinges	181-1	181
1801 Dashboard	182-1	182
1801 Cab Roof Hatch and Front Grille	183-1	183
1801 Engine Splash Guards	184-1	184
1801 Cab Door Fittings	185-1	185
1801 Door Locks, Handles and Key	186-1	186
1801 Air Drop Davit Boom Assembly	187-1	187
1801 Front Cab Supports	188-1	188
1801 Rear Cab Support, Leveling Valve, Latch, Air Spring, Hoses and Fittings	189-1	189
1801 Cab Fenders	190-1	190
1801 Van Splash Shields	191-1	191
1802 Standard Cab Windows	192-1	192
1802 Air Drop Cab Windows	193-1	193
1802 Cab Door, Windows and Fittings	194-1	194
1802 Rear Fenders and Splash Guards	195-1	195
1802 Cab Steps	196-1	196
1804 Cab Drain Plugs	197-1	197
1805 Cab Floor Coverings and Door Seals..	198-1	198
1806 Standard Cab Liners,Boarding Handles and Sun Visors..	199-1	199
1806 Air Drop Panels, Visors and Boarding Handles..	200-1	200
1806 Center Seat and Seat Belt	201-1	201
1806 Passenger Seat and Seat Belt	202-1	202
1806 Driver Seat and Seat Belt	203-1	203
1808 Tool Box	204-1	204
1808 Cab Storage Box Assembly	205-1	205
1810 M1078 Cargo Bed, Dropside Assembly and Ladder..	206-1	206
1810 M1081 Cargo Bed, Dropside Assembly and Ladder..	207-1	207
1810 Dropside Assembly	208-1	208
1810 Load Spreader Rear Lift Beam	209-1	209
1810 M1078 and M1081 Cargo Bed Sub-Assembly	210-1	210
1812 Van Body Upper Subframe	211-1	211
1812 Van Lifting Arm Assembly	212-1	212
1812 Van Pod Assembly	213-1	213
1812 Van Spreader Bar	214-1	214

	Page	Illus./ Figure
Group 18 Body and Cab (continued)		
1812 Van Body Panels, Fittings and Hardware	215-1	215
1812 Van Steps..	216-1	216
1812 Van Door Catch Striker and Fittings..	217-1	217
1812 Van RH Door Assembly..	218-1	218
1812 Van RH Door, Window and Blackout Shield..	219-1	219
1812 Van LH Door Assembly..	220-1	220
1812 Van Door Check Assembly..	221-1	221
1812 Van Large Window Assembly..	222-1	222
1812 Van Small Window Assembly, Screen and Cover..	223-1	223
1812 Van Tapping Plates..	224-1	224
1812 Van Electrical Boxes, Switches and Fittings..	225-1	225
1812 Van Electrical Conduits	226-1	226
1812 Van Blackout Switches..	227-1	227
1812 Van Blackout and Emergency Lights	228-1	228
1812 Van Lighting Fixture..	229-1	229
1812 Van Clearance Lights..	230-1	230
1812 Van Relay Box Assembly	231-1	231
1812 Van Breaker Box Assembly	232-1	232
1812 Van Exhaust Fan Assembly..	233-1	233
1812 Van 110/208V Power Panel..	234-1	234
1812 Van 12/24V Power Panel..	235-1	235
1812 Van Data and Identification Plates..	236-1	236
Group 20 Hoist, Winch, Power Control Unit and Power Take-Off		
2001 11 K Self Recovery Winch Assembly..	237-1	237
2001 11 K Self Recovery Winch Cable, Guides, Rollers, Brackets	238-1	238
2004 Power Take-Off Assembly..	239-1	239
Group 22 Body Chassis and Accessories		
2202 Windshield Washer Reservoir	240-1	240
2202 Windshield Wiper and Motor	241-1	241
2202 Cab Mirrors..	242-1	242
2202 Front Reflectors	243-1	243
2202 Rear Reflectors	244-1	244
2207 Personnel Heater Assembly..	245-1	245
2210 Data and identification Plates	246-1	246
Group 24 Body Hydraulic Lift Components		
2401 Air/Hydraulic Power Unit, Hoses and Fittings..	247-1	247
2401 Back-up Hydraulic Pump, Hoses and Fittings..	248-1	248
2402 Hydraulic Manifold, Hoses and' Fittings	249-1	249
2404 Cab Hydraulic Cylinder, Hoses and Fittings..	250-1	250
2404 Spare Tire Retainer Lift Cylinder, Hoses and Fittings	251-1	251
2406 Hydraulic Rotary Pump, Winch Control Valve, Hoses and Fittings..	252-1	252
2407 Suspension Cylinder, Hoses and Fittings	253-1	253
2408 Hydraulic Reservoir and Filter	254-1	254
Group 33 Special Purpose Kits		
3301 Engine Container	255-1	255
3301 Transmission Container	256-1	256
3303 Arctic Swing Fire Kit..	257-1	257
3303 Cargo Furnace Assembly	258-1	258

	Page	Illus./ Figure
Group 33 Special Purpose Kits (Cont)		
3303 Cargo Furnace Control Unit	259-1	259
3303 Cargo Furnace Heater Assembly	260-1	260
3303 Cargo Furnace Blower Power Cable Assembly	261-1	261
3303 Cargo Furnace Power Cable Assembly	262-1	262
3303 Arctic Cargo Furnace Exhaust Kit	263-1	263
3303 Cab Arctic Heater Kit	264-1	264
3303 Cab Arctic Heater Assembly	265-1	265
3303 Van Heater Kit	266-1	266
3303 Van Air Conditioner Kit	267-1	267
3305 Fording Kit	268-1	268
3307 Amber Warning Light	269-1	269
3307 M1078 and M1081 Troopseat Kit..	270-1	270
3307 Soft Top Cover Kit	271-1	271
3307 200A Alternator Kit	272-1	272
3307 200A Alternator Assembly and Regulator	273-1	273
3307 Light Material Handling Crane Kit	274-1	274
3307 Light Material Handling Crane Winch Assembly	275-1	275
3307 Light Material Handling Crane Hoist Assembly	276-1	276
3307 Light Material Handling Crane Mast and Swing Assembly..	277-1	277
3307 Light Material Handling Crane Handle	278-1	278
3307 Light Material Handling Crane Boom Assembly..	279-1	279
3307 Light Material Handling Crane Cable Extension	280-1	280
3307 Light Material Handling Crane Plug and Circuit Breaker..	281-1	281
3307 Shelter Tiedown Kit	282-1	282
Group 34 Armaments, Sighting and Fire Control Material		
3402 Machine Gun Mounting Kit..	283-1	283
3402 Small Arms Mount..	284-1	284
3402 Air Dryer, Hoses and Fittings..	285-1	285
Group 47 Measuring Gages		
4705 Air Filter Warning Indicator..	286-1	286
Repair Kits	Kits-1	
Bulk Items..	Bulk-1	
Section III. SPECIAL TOOLS LIST		
Group 26 Tools and Test Equipment		
2604 Unit Maintenance Special Tools	287-1	287
2604 Direct Support Maintenance Special Tools	288-1	288
2604 General Support Maintenance Special Tools..	289-1	289
Section IV. CROSS REFERENCE INDEX		
Part Number Index	I-1	
National Stock Number Index	I-111	
Figure and Item Number Index	I-161	

UNIT, DIRECT SUPPORT, AND GENERAL SUPPORT MAINTENANCE REPAIR PARTS AND SPECIAL TOOLS LIST

SECTION I. INTRODUCTION

1.Scope.
This RPSTL lists and authorizes spares and repair parts; special tools; special test, measurement, diagnostic equipment (TMDE); and other special support equipment required for performance of unit, direct support, and general support maintenance of the M1078 Series LMTV. It authorizes the requisitioning, issue, and disposition of spares, repair parts and special tools as indicated by the source, maintenance and recoverability (SMR) codes.

2.General.
In addition to Section I, Introduction, this Repair Parts and Special Tools List is divided into the following sections:

a.Section II. Repair Parts List. A list of spares and repair parts authorized by this RPSTL for use in the performance of maintenance. The lists also includes parts which must be removed for replacement of authorized parts. Parts lists are composed of functional groups in ascending alphanumeric sequence, with the parts in each group listed in ascending figure and item number sequence. Bulk materials are listed by item name in FIG. BULK at the end of the section. Repair parts kits are listed separately in their own functional group within Section II. Repair parts for repairable special tools are also listed in this section.

b.Section III. Special Tools List. A list of special tools, special TDME, and other special support equipment authorized by this RPSTL (as indicated by Basis of Issue (BOI) information in DESCRIPTION AND USABLE ON CODE column) for the performance of maintenance.

c.Section IV. Cross-Reference Index. A list, in National Item Identification Number (NIIN) sequence, of all National stock numbered items appearing in the listings, followed by a list in alphanumeric sequence of all part numbers appearing in the listings. National stock numbers and part numbers are cross-referenced to each illustration figure and item number appearance. The figure and item number index lists figure and item numbers in alphanumeric sequence and cross-references NSN, CAGEC and part numbers.

3.Explanation of Columns (Sections II and III).

a.ITEM NO. (Column (1). Indicates the number used to identify items called out in the illustration.

b.SMR CODE (Column (2)). The Source, Maintenance, and Recoverability (SMR) code is a 5-position code containing supply/requisitioning information, maintenance category authorization criteria, and disposition instruction, as shown in the following breakout:

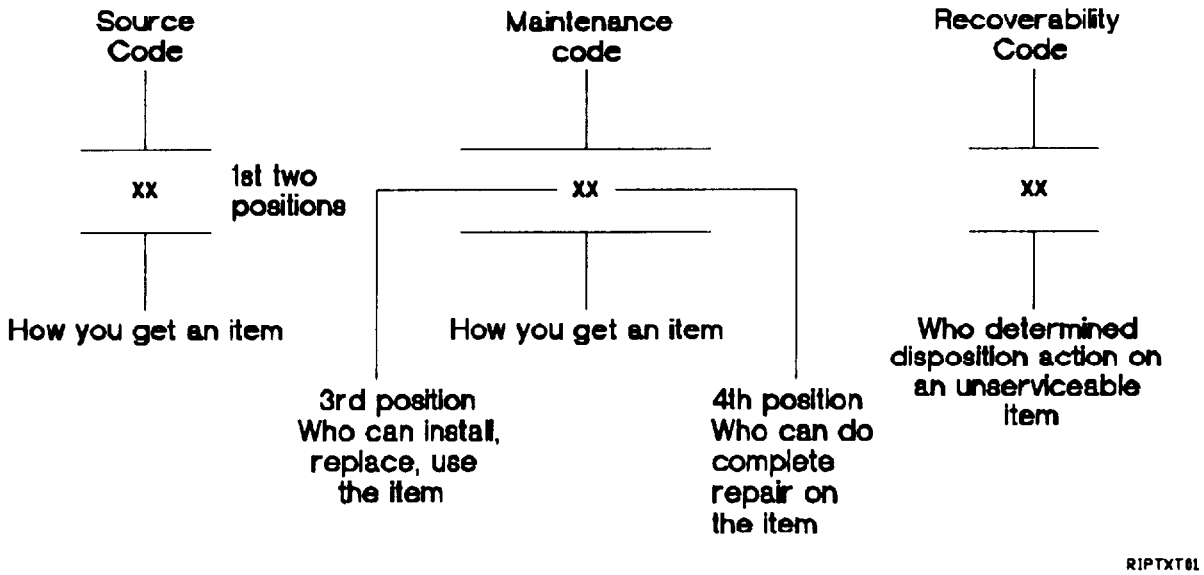

*Complete Repair: Maintenance capacity, capability, and authority to perform all corrective maintenance tasks of the “Repair” function in a use/user environment in order to restore serviceability to a failed item.

(1)Source Code. The source code tells you how to get an item needed for maintenance, repair, or overhaul of an end item/equipment. Explanation of source codes follows:

Code	Explanation
PA PB PC PD PE PF PG	Stocked items; use the applicable NSN to request/requisition items with these source codes. They are authorized to the category indicated by the code entered in the 3rd position of the SMR code.

**NOTE: Items coded PC are subject to deterioration.

Code	Explanation
KD KF KB	Items with these codes are not to be requested/requisitioned individually. They are part of a kit which is authorized to the maintenance category indicated in the 3rd position of the SMR code. The complete kit must be requisitioned and applied.
MO - (Made at org level) MF - (Made at DS level) MH - (Made at GS level) ML - (Made at Specialized Repair Act (SRA) MD - (Made at Depot)	Items with these codes are not to be requested/requisitioned individually. They must be made from bulk material which is identified by the part number in the DESCRIPTION AND USABLE ON CODE (UOC) column and listed in the Bulk Material group of the repair parts list in this RPSTL. If the item is authorized to you by the 3rd position of the SMR code, but the source code indicates it is made at a higher level, order the item from the higher level of maintenance.
AO - (Assembled by org level) AF - (Assembled by DS level) AH - (Assembled by GS level) AL - (Assembled by SRA) AD - (Assembled by Depot)	Items with these codes are not to be requested/requisitioned individually. The parts that make up the assembled item must be requisitioned or fabricated and assembled at the level of maintenance indicated by the source code. If the 3rd position code of the SMR code authorizes you to replace the item, but the source code indicates the item is assembled at a higher level, order the item from the higher level of maintenance.

XA -Do not requisition an “XA”-coded item. Order its next higher assembly. (Also, refer to the NOTE below.)

XB -If an “XB” item is not available from salvage, order it using the CAGEC and part number given.

XC -Installation drawing diagram, instruction sheet, field service drawing, that is identified by manufacturer’s part number.

XD -Item is not stocked. Order an “XD”-coded item through normal supply channels using the CAGEC and part number given, if no NSN is available.

NOTE: Cannibalization or controlled exchange, when authorized, may be used as a source of supply for items with the above source codes, except for those source coded “XA”.

(2) Maintenance Code. Maintenance codes tells you the level(s) of maintenance authorized to USE and REPAIR support items. The maintenance codes are entered in the third and fourth positions of the SMR code as follows:

(a) The maintenance code entered in the third position tells the lowest maintenance level authorized to remove, replace, and use an item. The maintenance code entered in the third position will indicate authorization to one of the following levels of maintenance.

Code	Application/Explanation
C	-Crew or operator maintenance done within organizational level.
O	-Organizational level can remove, replace, and use the item.
F	-Direct support level can remove, replace, and use the item.
H	-General support level can remove, replace, and use the item.
L	-Specialized repair activity can remove, replace and use the item.
D	-Depot level can remove, replace, and use the item.

(b) The maintenance code entered in the fourth position tells whether or not the item is to be repaired and identifies the lowest maintenance level with the capability to do complete repair (i.e., perform all authorized repair functions.) (NOTE: Some limited repair may be done on the item at a lower level of maintenance, if authorized by the Maintenance Allocation Chart (MAC) and SMR codes.) This position will contain one of the following maintenance codes.

Code	Application/Explanation
O	-Organizational is the lowest level that can do complete repair of the item.
F	-Direct support is the lowest level that can do complete repair of the item.
H	-General support is the lowest level that can do complete repair of the item.
D	-Depot is the lowest level that can do complete repair of the item.
Z	-Nonrepairable. No repair is authorized.
B	-No repair is authorized. (No parts or special tools are authorized for the maintenance of a “B” coded item). However, the item may be reconditioned by adjusting, lubricating, etc., at the user level.

(3) Recoverability Code. Recoverability codes are assigned to items to indicate the disposition action on unserviceable items. The recoverability code is entered in the fifth position of the SMR Code as follows:

Code	Application/Explanation
Z	-Nonrepairable item. When unserviceable, condemn and dispose of the item at the level of maintenance shown in 3rd position of SMR Code.
O	-Reparable item. When uneconomically reparable, condemn and dispose of the item at organizational level.
F	-Reparable item. When uneconomically reparable, condemn and dispose of the item at the direct support level.
H	-Reparable item. When uneconomically reparable, condemn and dispose of the item at the general support level.
D	-Reparable item. When beyond lower level repair capability, return to depot. Condemnation and disposal of item not authorized below depot level.
L	-Reparable item. Condemnation and disposal not authorized below specialized repair activity (SRA).
A	-Item requires special handling or condemnation procedures because of specific reasons (e.g., precious metal content, high dollar value, critical material, or hazardous material). Refer to appropriate manuals/directives for specific instructions.

c. CAGEC (Column (3)). The Commercial and Government Entity Code (CAGEC) is a 5-digit alphanumeric code which is used to identify the manufacturer, distributor, or Government agency, etc., that supplies the item.

d. PART NUMBER (Column (4)). Indicates the primary number used by the manufacturer (individual, company, firm, corporation, or Government activity), which controls the design and characteristics of the item by means of its engineering drawings, specifications standards, and inspection requirements to identify an item or range of items.

NOTE: When you use an NSN to requisition an item, the item received may have a different part number from the part ordered.

e. DESCRIPTION AND USABLE ON CODE (UOC) (Column (5)). This column includes the following information:

(1) The Federal item name and, when required, a minimum description to identify the item.

(2) The physical security classification of the item is indicated by the parenthetical entry (none).

(3) Items that are included in kits and sets are listed below the name of the kit or set.

(4) Spare/repair parts that make up an assembled item are listed immediately following the assembled item line entry.

(5) Part numbers for bulk materials are referenced in this column in the line item entry for the item to be manufactured/fabricated.

(6) When the item is not used with all serial numbers of the same model, the effective serial numbers are shown on the last line(s) of the description (before UOC).

(7) The usable on code, when applicable (see paragraph 5, Special information).

(8) In the Special Tools List section, the basis of issue (BOI) appears as the last line(s) in the entry for each special tool, special TMDE, and other special support equipment. When density of equipments supported exceeds spread indicated in the basis of issue, the total authorization is increased proportionately.

(9) The statement “END OF FIGURE” appears just below the last item description in Column 5 for a given figure in both Section II and Section Ill.

f. QTY (Column (6)). The QTY (quantity per figure column) indicates the quantity of the item used in the breakout shown on the illustration figure, which is prepared for a functional group, subfunctional group, or an assembly. A “V” appearing in this column in lieu of a quantity indicates that the quantity is variable and the quantity may vary from application to application.

4. Explanation of Columns (Section IV).

a. NATIONAL STOCK NUMBER (NSN) INDEX.

(1) STOCK NUMBER column. This column lists the NSN by National item identification number (NIIN) sequence. The NIIN consists of the last nine digits of the NSN (i.e., 5305-01-674-1467). When using this column to locate an item, ignore the first 4 digits of the NSN. However, the complete NSN should be used when ordering items by stock number.

(2) FIG. column. This column lists the number of the figure where the item is identified/located. The figures are in numerical order in Section II and Section Ill.

(3) ITEM column. The item number identifies the item associated with the figure listed in the adjacent FIG. column. This item is also identified by the NSN listed on the same line.

b. PART NUMBER INDEX. Part numbers in this index are listed in ascending alphanumeric sequence (i.e., vertical arrangement of letter and number combination which places the first letter or digit of each group in order A through Z, followed by the numbers 0 through 9 and each following letter or digit in like order).

(1) CAGEC column. The Commercial and Government Entity Code (CAGEC) is a 5-digit alphanumeric code used to identify the manufacturer, distributor, or Government agency, etc., that supplies the item.

(2) PART NUMBER column. Indicates the primary number used by the manufacturer (individual, firm, corporation or Government activity), which controls the design and characteristics of the item by means of its engineering drawings, specifications standards, and inspection requirements to identify an item or range of items.

(3) STOCK NUMBER column. This column lists the NSN for the associated part number and manufacturer identified in the PART NUMBER and CAGEC columns to the left.

(4) FIG. column. This column lists the number of the figure where the item is identified/located in Section II and Ill.

(5) ITEM column. The item number is that number assigned to the item as it appears in the figure referenced in the adjacent figure number column.

c. FIGURE AND ITEM NUMBER INDEX.

(1) FIG. column. This column lists the number of the figure where the item is identified/located in Section II and Ill.

(2) ITEM column. The item number is that number assigned to the item as it appears in the figure referenced in the adjacent figure number column.

(3) STOCK NUMBER column. This column lists the NSN for the item.

(4) CAGEC column. The Commercial and Government Entity Code (CAGEC) is a 5-digit alphanumeric code used to identify the manufacturer, distributor, or Government agency, etc., that supplies the item.

(5) PART NUMBER column. Indicates the primary number used by the manufacturer (individual, firm, corporation or Government activity), which controls the design and characteristics of the item by means of its engineering drawings, specifications standards, and inspection requirements to identify an item or range of items.

5. Special Information.

USABLE ON CODE The usable on code appears in the lower left corner of the Description column heading. Usable on codes are shown as "UOC: . . . . . " in the description column (left justified) on the first line applicable item description/ nomenclature. Uncoded items are applicable to all models. Identification of UOC's used in this RPSTL are:

Code	Used on
	Trk, Car., LMTV M1078
	LWB*W/WN
	LAB W/O WN
	Trk, Van, LMTV M1079
	LWD*W/WN
	LAD W/O WN
	LAATrk, Chas, LMTV M1080
	Trk, Car., LMTV/AIRDROP M1081
	LWC * W/WN
	LACW/O WN

* = With PTO.

b. FABRICATION INSTRUCTIONS. Bulk materials required to manufacture items are listed in the Bulk Material Functional Group of this RPSTL. Part numbers for bulk materials are also referenced in the description column of the line item entry for the item to be manufactured/fabricated. Detailed fabrication instructions for items source coded to be manufactured or fabricated are found in TM 9-2320-365-20 and TM 9-2320-365-34.

c. ASSEMBLY INSTRUCTION. Detailed assembly instructions for items source coded to be assembled from component spare/repair parts are found in TM 9-2320-365-20 and TM 9-2320-365-34. Items that make up the assembly are listed immediately following the assembly item entry or reference is made to an applicable figure.

d. KITS. Line item entry for repair parts kits appear in a group in Section II (see table of contents).

e. INDEX NUMBERS. Items which have the word BULK in the figure column will have an index number shown in the item number column. This index number is a cross-reference between the National Stock Number/Part Number Index and the bulk material list in Section II.

f. ASSOCIATED PUBLICATIONS. The publication(s) listed below pertain to the MTV and its components.

Publication	Short Title
TB 9-2300-365-15	Technical Bulletin, Warranty, LMTV
TM 9-2320-365-10	Operator's Instructions
TM 9-2320-365-10HR	Hand Receipt
TM 9-2320-365-20	Unit Maintenance Manual
TM 9-2320-365-34	Direct Support (DS)/General Support (GS) Maintenance Manual
TM 9-2320-365-24P	Unit, Direct Support (DS) and General Support (GS) Repair Parts and Special Tools List (RPSTL)

6. How to Locate Repair Parts.

a. When National Stock Number or Part Number Is Not Known.

(1) First. Using the Table of Contents, determine the assembly group or subassembly group to which the item belongs, This is necessary since figures are prepared for assembly groups and subassembly groups, and listings are divided into the same groups.

(2) Second. Find the figure covering the assembly group or subassembly group to which the item belongs.

(3) Third. Identify the item on the figure and use the Figure and Item Number Index to find the NSN.

b. When National Stock Number or Part Number is Known.

(1) First. Using the National Stock Number or Part Number Index, find the pertinent NSN or PN. The NSN index is in National Item Identification Number (NIIN) sequence (see 4a(1)). The part numbers in the PN index are listed in ascending alphanumeric sequence (see 4b). Both indexes cross-reference to the illustration/figure and item number of the item.

(2) Second. Turn to the figure and item number, verify the item is the one you're looking for, then locate the item number in the repair parts list for the figure.

7. Abbreviations.

Abbreviation	Explanation
LMTV	Light Medium Tactical Vehicle
W/WN	With Winch
STE/ICE	Simplified Test Equipment/Internal Combustion Engines
CTIS	Central Tire Inflation System

Section II. REPAIR PARTS LIST

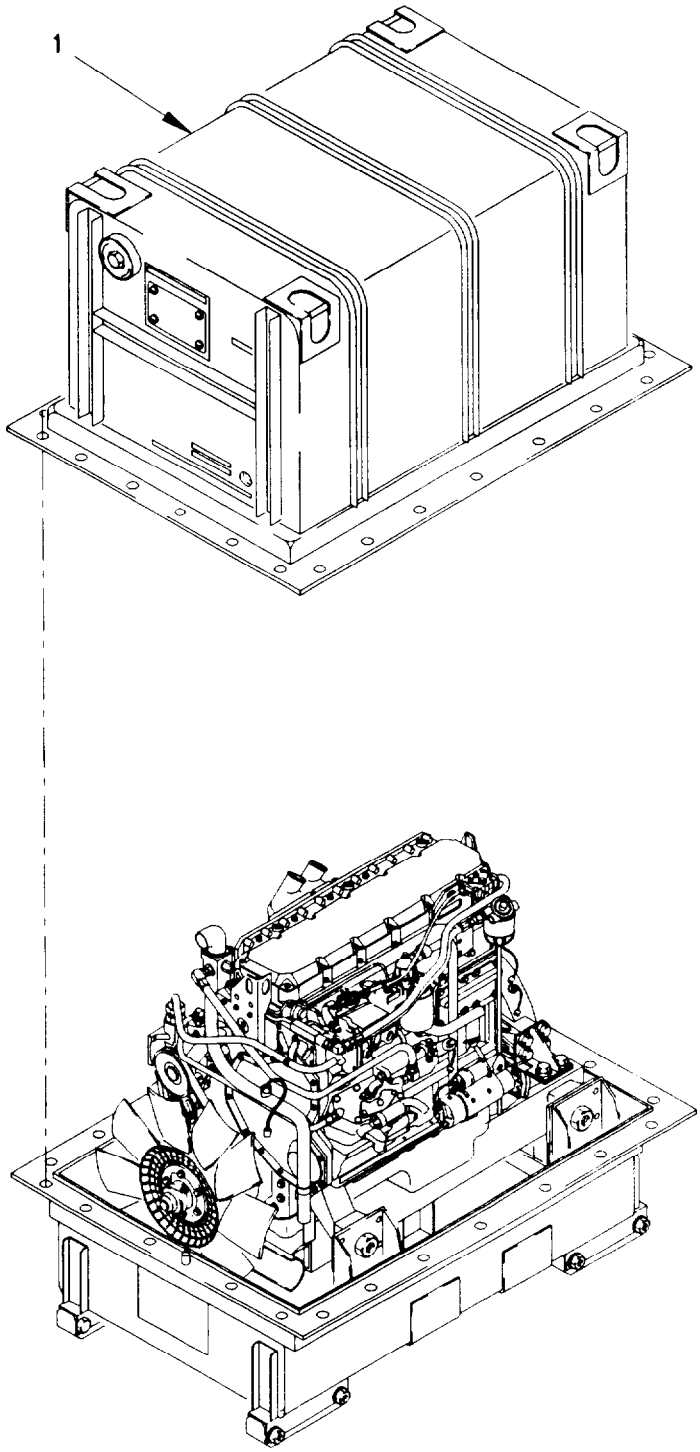

0100A-1A

Figure 1. Dressed Engine With Container

(1) ITEM NO	(2) SMR CODE	(3) FSCM	(4) PART NUMBER	(5) DESCRIPTION AND USABLE ON CODE (UOC)	(6) QTY
				GROUP 0100: ENGINE ASSEMBLY FIG. 1 DRESSED ENGINE WITH CONTAINER	
1	PAFHH	0FW39	12414398-003	ENGINE, DIESEL	1
				END OF FIGURE	

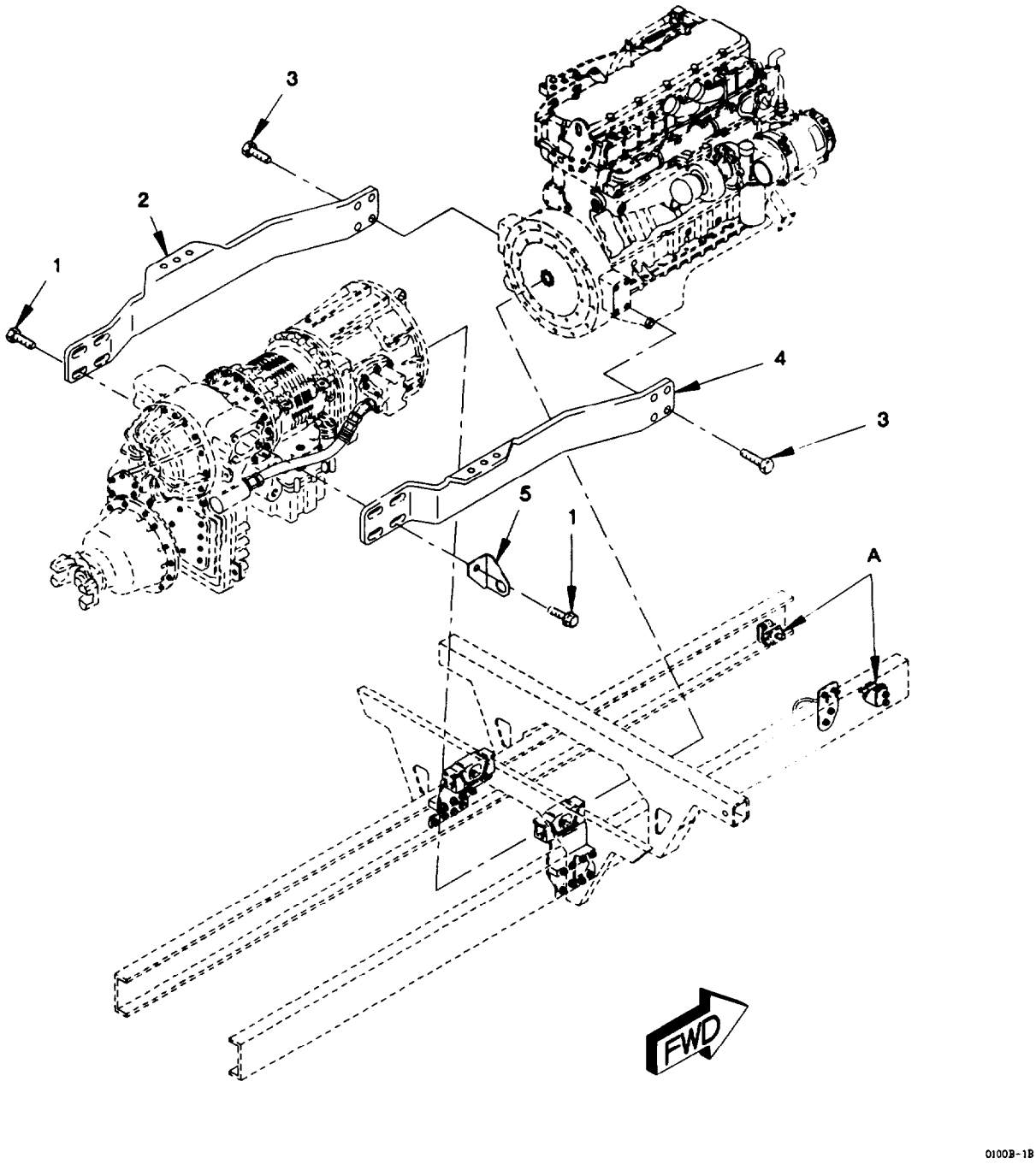

Figure 2. Engine Mounts (Sheet 1 of 2)

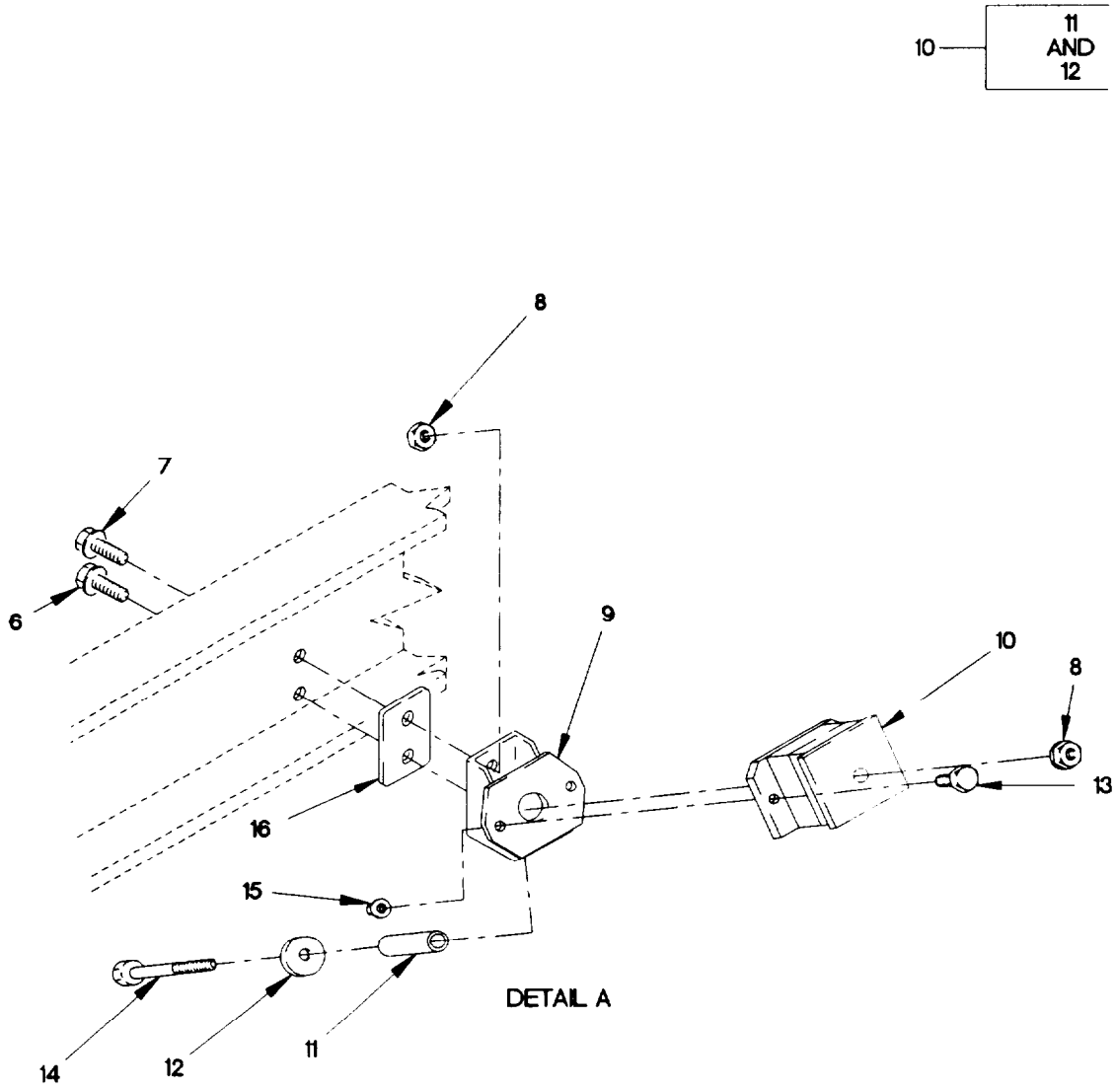

0100B-2B

Figure 2 Engine Mounts (Sheet 2 of 2)

(1) ITEM NO	(2) SMR CODE	(3) FSCM	(4) PART NUMBER	(5) DESCRIPTION AND USABLE ON CODE (UOC)	(6) QTY
				GROUP 0100: ENGINE ASSEMBLY	
				FIG. 2 ENGINE MOUNTS	
1	PAFZZ	19207	12414307-194	SCREW, CAP, HEXAGON H M20 X 2.5 X 60	8
2	PAFZZ	19207	12414290-001	BRACKET, ENGINE MOUN	1
3	PAFZZ	19207	12414566-001	SCREW, CAP, HEXAGON H M14 X 2 X 35	8
4	PAFZZ	19207	12414289-001	BRACKET, ENGINE MOUN	1
5	PAOZZ	19207	12420840-001	BRACKET, ANGLE	1
6	PAFZZ	19207	12414307-078	BOLT, MACHINE M12 X 1.5 X 35	3
7	PAFZZ	19207	12414307-079	BOLT, MACHINE M12 X 1.5 X 40	1
8	PAFZZ	19207	12414308-021	NUT, SELF-LOCKING, EX M12 X 1.5	6
9	PAFZZ	19207	12414285	BRACKET, ENGINE MOUN	2
10	PAFZZ	81860	26112	MOUNT, RESILIENT	2
11	PAFZZ	19207	12419221	.BOLT, SHOULDER	2
12	PAFZZ	19207	12419222	.WASHER, FLAT 1/2	2
13	PAFZZ	19207	12414307-037	BOLT, MACHINE M8 X 1.25 X 25	4
14	PAFZZ	19207	12414307-087	BOLT, MACHINE M12 X 1.5 X 90	2
15	PAFZZ	19207	12414308-18	NUT, SELF-LOCKING, EX M8 X 1.25	4
16	PAFZZ	19207	12414665	SPACER, PLATE	2
				END OF FIGURE	

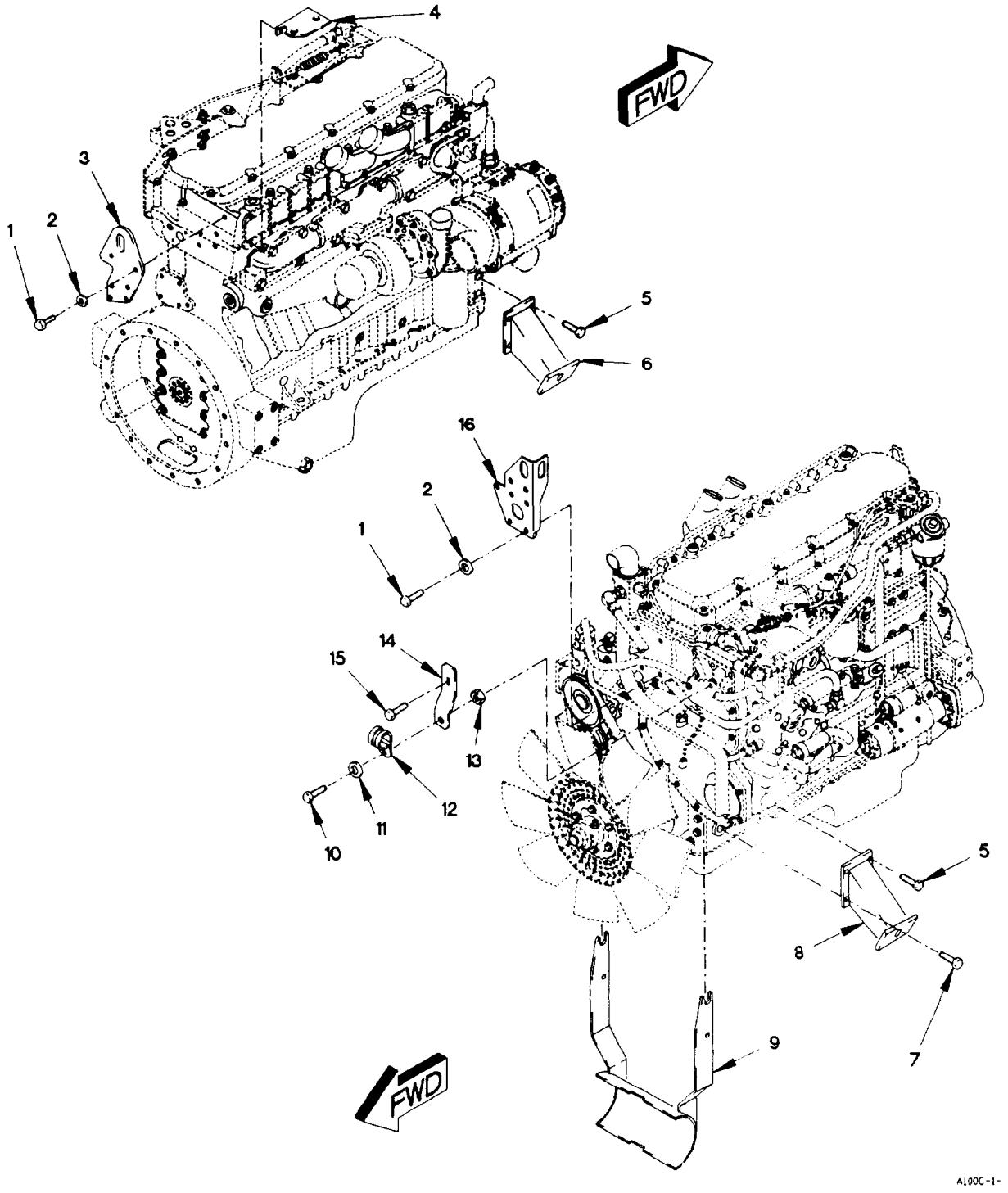

Figure 3. Engine Brackets

(1) ITEM NO	(2) SMR CODE	(3) FSCM	(4) PART NUMBER	(5) DESCRIPTION AND USABLE ON CODE (UOC)	(6) QTY
				GROUP 0100: ENGINE ASSEMBLY	
				FIG. 3 ENGINE BRACKETS	
1	PAOZZ	11083	8T4136	BOLT, MACHINE M10 X 1.5 X 25	9
2	PAOZZ	11083	8T4121	WASHER, FLAT M11	9
3	PAOZZ	11083	4R9234	PLATE, MOUNTING	1
4	PAOZZ	19207	12421149	BRACKET, ANGLE	1
5	PAFZZ	19207	12414566-002	SCREW, CAP, HEXAGON H M14 X 2 X 40	6
6	PAFZZ	19207	12414287	BRACKET, ENGINE MOUN	1
7	PAFZZ	19207	12414566-001	SCREW, CAP, HEXAGON H M14 X 2 X 35	2
8	PGOZZ	19207	12414286	BRACKET, VEHICULAR C	1
9	PGOZZ	0FW39	12414432	BRACKET, MOUNTING	1
10	PAOZZ	64678	000933 006058	SCREW, CAP, HEXAGON H M6 X 1 X 25	1
11	PAOZZ	19200	12524631-1	WASHER, FLAT M6	1
12	PAOZZ	96906	MS21333-107	CLAMP, LOOP 1 IN	1
13	PAOZZ	15526	DIN 934 ST M6	NUT, SELF-LOCKING, HE M6 X 1	1
14	PAOZZ	19207	12414401	BRACKET, ENGINE MOUN	1
15	PAOZZ	15526	DIN933-M10X20-8.8-A4C	BOLT, MACHINE M10 X 1.5 X 20	1
16	PAOZZ	11083	4R9233	BRACKET, ANGLE	1
				END OF FIGURE	

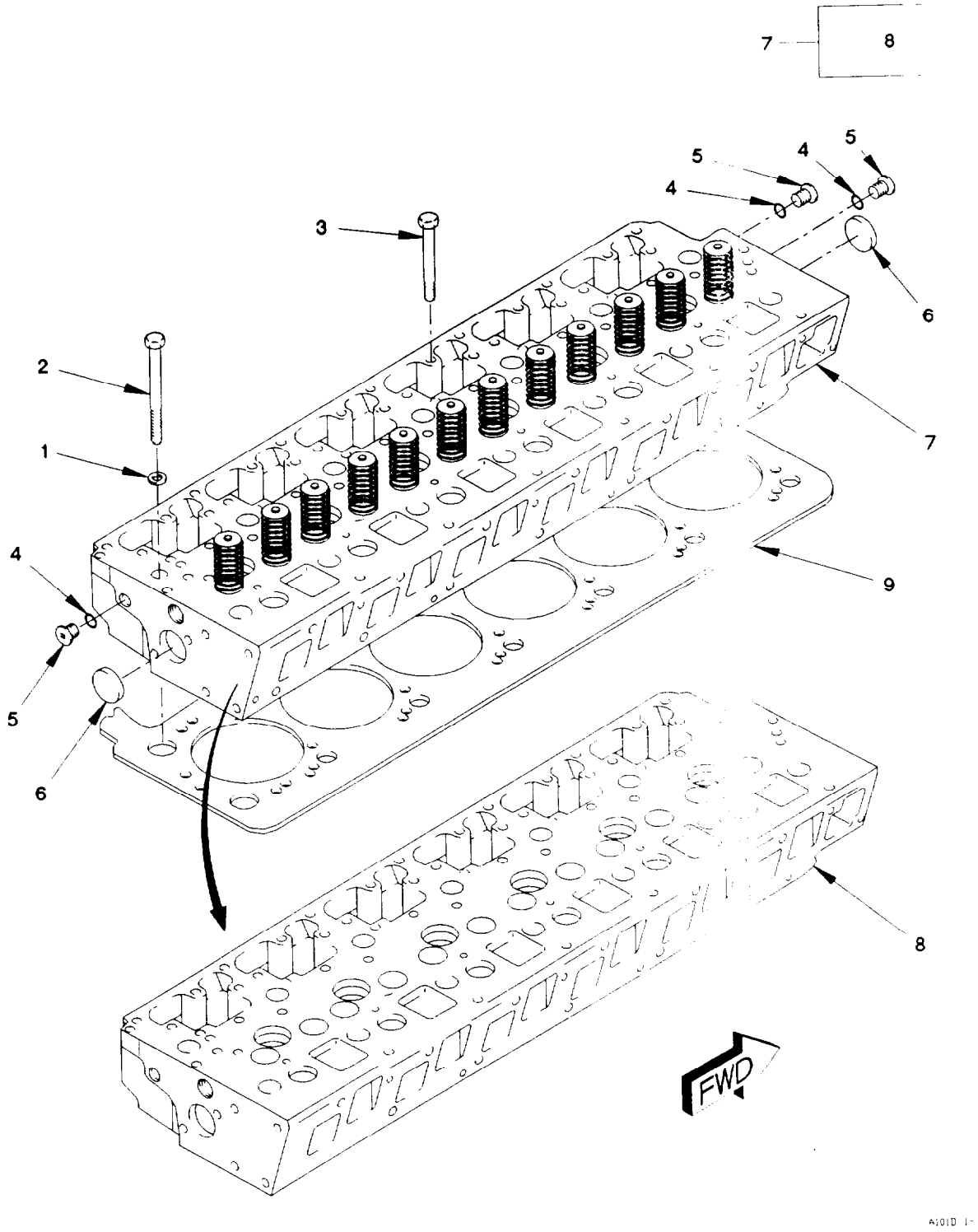

Figure 4. Cylinder Head with Valves and Gasket

(1) ITEM NO	(2) SMR CODE	(3) FSCM	(4) PART NUMBER	(5) DESCRIPTION AND USABLE ON CODE (UOC)	(6) QTY
				GROUP 0101: CRANKCASE, BLOCK, CYLINDER HEAD	
				FIG. 4 CYLINDER HEAD WITH VALVES AND GASKET	
1	PAFZZ	11083	8T3282	SPACER, RING	14
2	PAFZZ	11083	8T0657	SCREW, CAP, HEXAGON H M20 X 2.5 X 160	14
3	PAFZZ	11083	8T5030	SCREW, CAP, HEXAGON H M10 X 1.5 X 120	6
4	PAFZZ	11083	1J9671	PACKING, PREFORMED PART OF KIT P/N 9X8318	3
5	PAFZZ	11083	9S8003	PLUG, MACHINE THREAD	3
6	PAFZZ	11083	2M6471	PLUG, EXPANSION	2
7	PAFHH	11083	115-4165	CYLINDER HEAD, DIESE	1
8	PAHHH	11083	9Y6166	.CYLINDER HEAD, DIESE (WITH GUIDES, INSERTS AND SLEEVES)	1
9	PAFZZ	11083	4P6930	GASKET PART OF KIT P/N 9X8318	1
				END OF FIGURE	

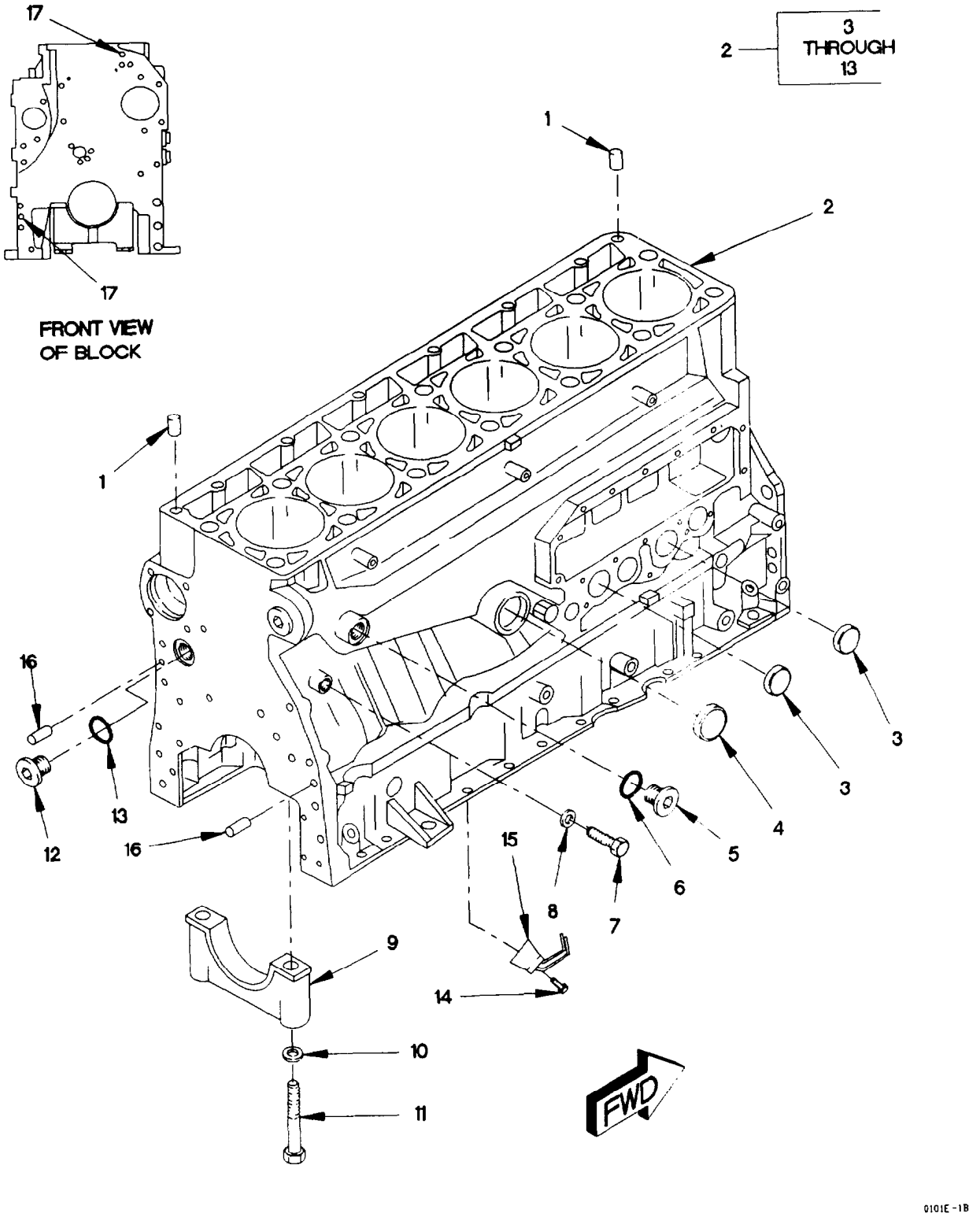

Figure 5. Cylinder Block

(1) ITEM NO	(2) SMR CODE	(3) FSCM	(4) PART NUMBER	(5) DESCRIPTION AND USABLE ON CODE (UOC)	(6) QTY
				GROUP 0101: CRANKCASE, BLOCK CYLINDER HEAD	
				FIG. 5 CYLINDER BLOCK	
1	PAHZZ	11083	1W8407	BUSHING, SLEEVE	2
2	PAHZZ	11083	100-4948	ENGINE BLOCK, DIESEL	1
3	PAFZZ	11083	2M6471	.PLUG, EXPANSION	2
4	PAFZZ	11083	3H5552	.PLUG	1
5	PAFZZ	11083	9S8008	.PLUG	2
6	PAFZZ	11083	3D2824	.O-RING PART OF KIT P/N 7X2521, 7X2524, 7X2528, 9X8318	2
7	PAFZZ	11083	8T0293	.BOLT, MACHINE M12 X 1.75 X 20	2
8	PAFZZ	11083	6F7062	.WASHER, FLAT PART OF KIT P/N 7X2521	2
9	XAHZZ	11083	7E2968	.CAP, PILLOW BLOCK	7
10	PAHZZ	11083	5P8247	.WASHER, FLAT M17	14
11	PAHZZ	11083	9X8916	.BOLT, MACHINE M16 X 2 X 140	14
12	PAHZZ	11083	9S8006	.PLUG	1
13	PAHZZ	11083	2M9780	.PACKING, PREFORMED	1
14	PAFZZ	11083	6V3940	SCREW, CAP, HEXAGON H M8 X 1.25 X 25	6
15	PAFZZ	11083	4P5651	TUBE ASSEMBLY, METAL	6
16	PAHZZ	11083	7N5683	PIN, STRAIGHT, HEADLE	2
17	PAHZZ	11083	6V3538	PIN, STRAIGHT, HEADLE	2

END OF FIGURE

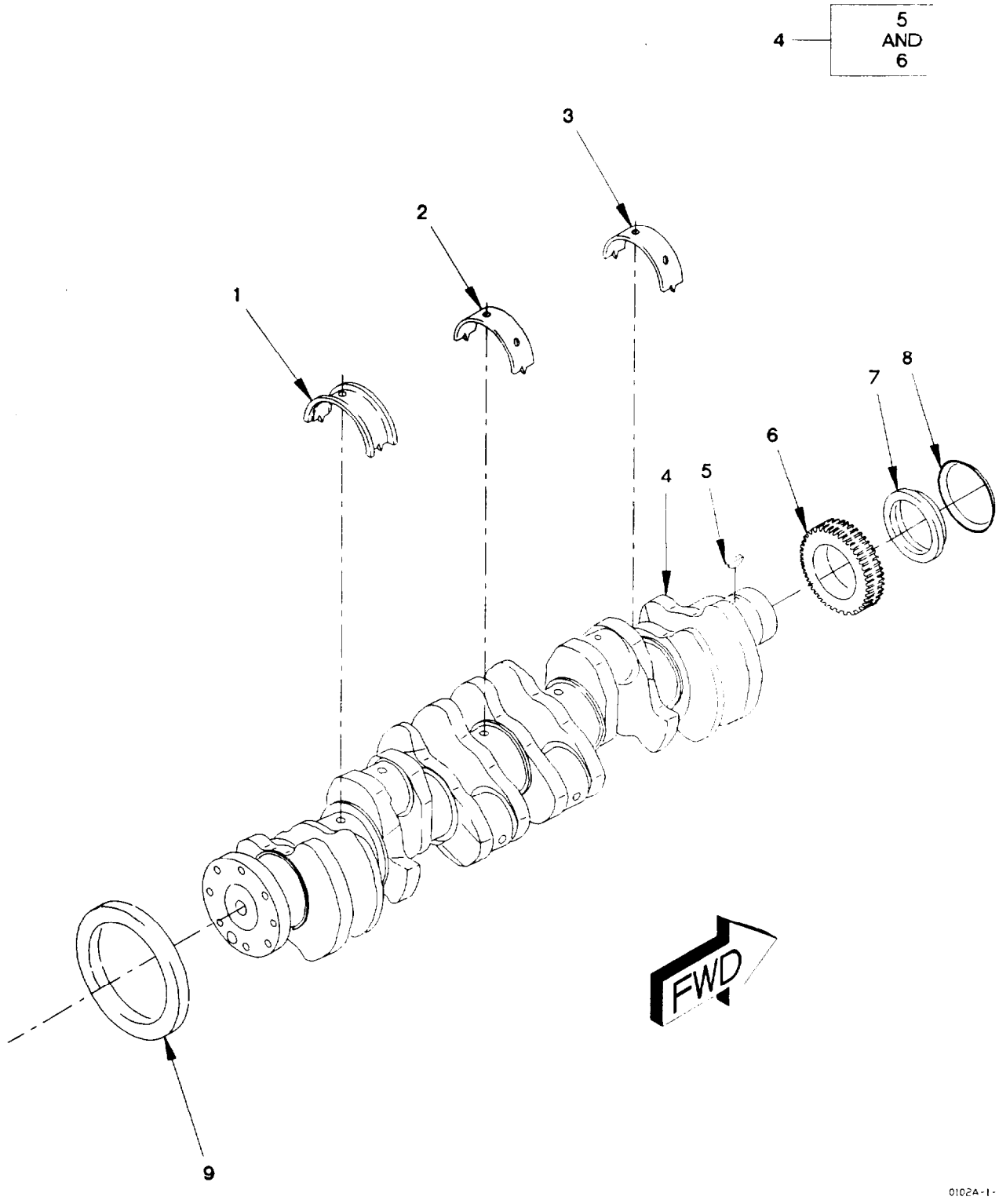

Figure 6. Crankshaft

(1) ITEM NO	(2) SMR CODE	(3) FSCM	(4) PART NUMBER	(5) DESCRIPTION AND USABLE ON CODE (UOC)	(6) QTY
				GROUP 0102: CRANKSHAFT	
				FIG. 6 CRANKSHAFT	
1	PAHZZ	11083	7C6966	BEARING, SLEEVE 0.25MM US	1
1	PAHZZ	11083	7C6967	BEARING, SLEEVE 0.5MM	1
1	PAHZZ	11083	7C6969	BEARING, SLEEVE 0.5MM OS	1
1	PAHZZ	11083	7C6970	BEARING, SLEEVE 0.5MM US-0.5MM OS	1
1	PAHZZ	11083	107-7602	BEARING, WASHER, THRU	1
2	PAHZZ	11083	7C6971	BEARING, SLEEVE 0.25MM US	3
2	PAHZZ	11083	7C6972	BEARING, SLEEVE 0.5 MM	3
2	PAHZZ	11083	7C6974	BEARING, SLEEVE 0.5MM OS	3
2	PAHZZ	11083	7C6975	BEARING, SLEEVE 0.5MM US-0.5MM OS	3
2	PAHZZ	11083	7W9417	BEARING, SLEEVE	3
3	PAHZZ	11083	7C6961	BEARING, SLEEVE 0.25MM US	3
3	PAHZZ	11083	7C6962	BEARING, SLEEVE 0.5MM US	3
3	PAHZZ	11083	7C6964	BEARING, SLEEVE 0.5MM OS	3
3	PAHZZ	11083	7C6965	BEARING, SLEEVE 0.5MM US-0.5MM OS	3
3	PAHZZ	11083	7W9414	BEARING, SLEEVE	3
4	PAHHH	11083	105-1725	CRANKSHAFT, ENGINE	1
5	PAHZZ	96906	MS35756-9	.KEY, WOODRUFF	1
6	PAHZZ	11083	2W8147	.GEAR, SPUR	1
7	PAHZZ	11083	4R8831	SEAL, PLAIN ENCASED PART OF KIT P/N 5R9051	1
8	KFFZZ	11083	4R9999	EXCLUDER PART OF KIT P/N 5R9051	1
9	PAHZZ	11083	115-4109	SEAL, PLAIN ENCASED PART OF KIT P/N 7X2525	1

END OF FIGURE

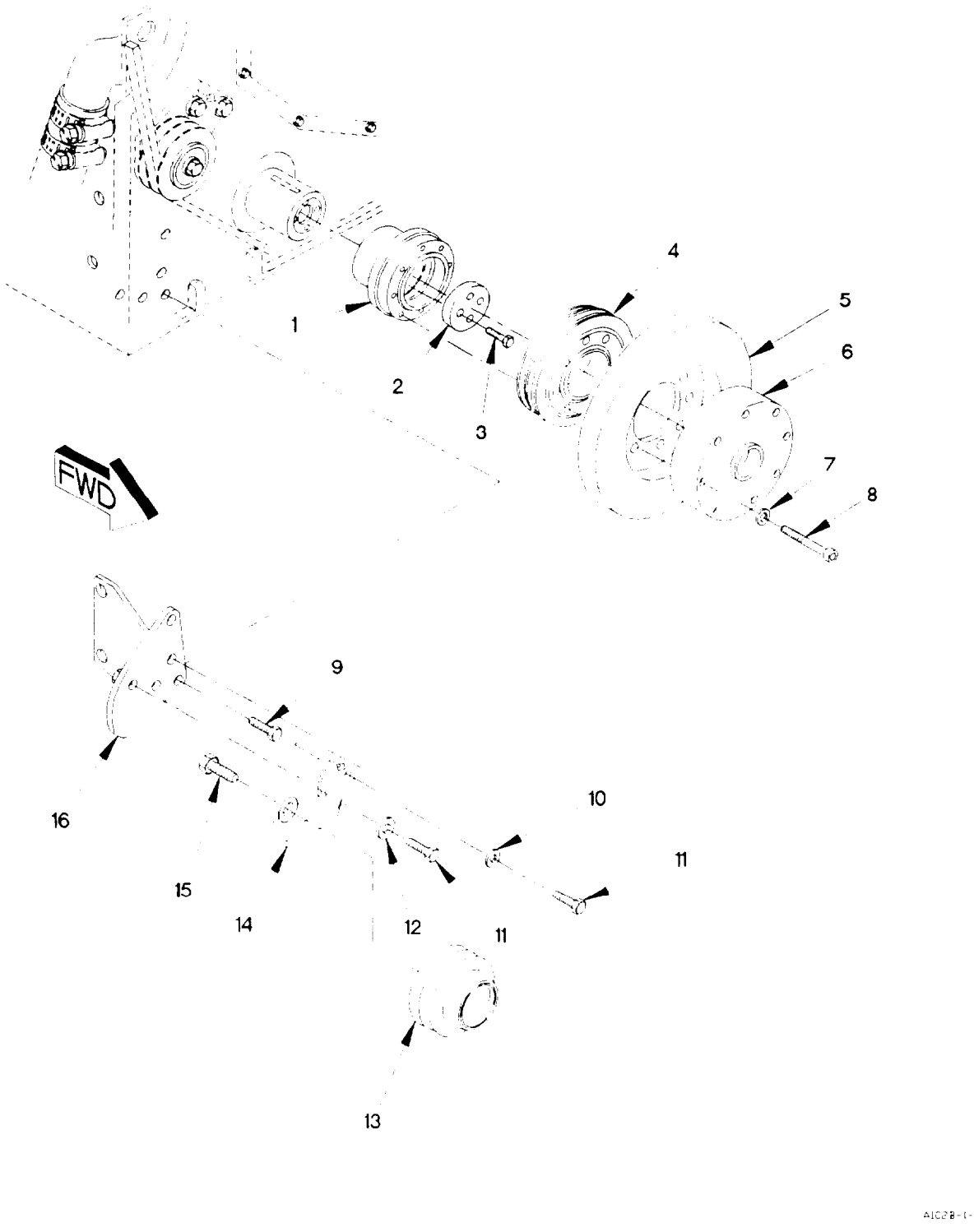

Figure 7. Pulley and Damper

(1) ITEM NO	(2) SMR CODE	(3) FSCM	(4) PART NUMBER	(5) DESCRIPTION AND USABLE ON CODE (UOC)	(6) QTY
				GROUP 0102: CRANKSHAFT FIG. 7 PULLEY AND DAMPER	
1	PAFZZ	11083	7W3773	PULLEY, GROOVE	1
2	PAFZZ	11083	2W7381	PLATE, RETAINING, SHA	1
3	PAFZZ	11083	8T3666	SCREW, CAP, HEXAGON H M14 X 2 X 60	4
4	PAFZZ	11083	4R8832	PULLEY, GROOVE	1
5	PAFZZ	11083	7C8444	DAMPENER, VIBRATION	1
6	PAFZZ	11083	4R8939	DAMPENER, VIBRATION	1
7	PAFZZ	11083	3V2431	WASHER, FLAT #8	8
8	PAFZZ	11083	8T4186	BOLT, MACHINE	8
9	PAOZZ	11083	6V8336	SCREW, CAP, HEXAGON H M12 X 1.75 X 70	3
10	PAOZZ	81349	MIL-W-70342/4	WASHER, FLAT M10	1
11	PAOZZ	19207	12414419-112	SCREW, CAP, HEXAGON H M10 X 1.5 X 25	2
12	PAOZZ	19207	12414473-014	WASHER, FLAT M10	1
13	PAOZZ	19207	12420812	PULLEY, GROOVE	1
14	PAOZZ	19207	12414377	ARM, ADJUSTING, BELT	1
15	PAOZZ	15526	933-M16X50	SCREW, CAP, HEXAGON H M16 X 2.0 X 50	1
16	PAOZZ	19207	12414374	BRACKET, ENGINE ACCE	1
				END OF FIGURE	

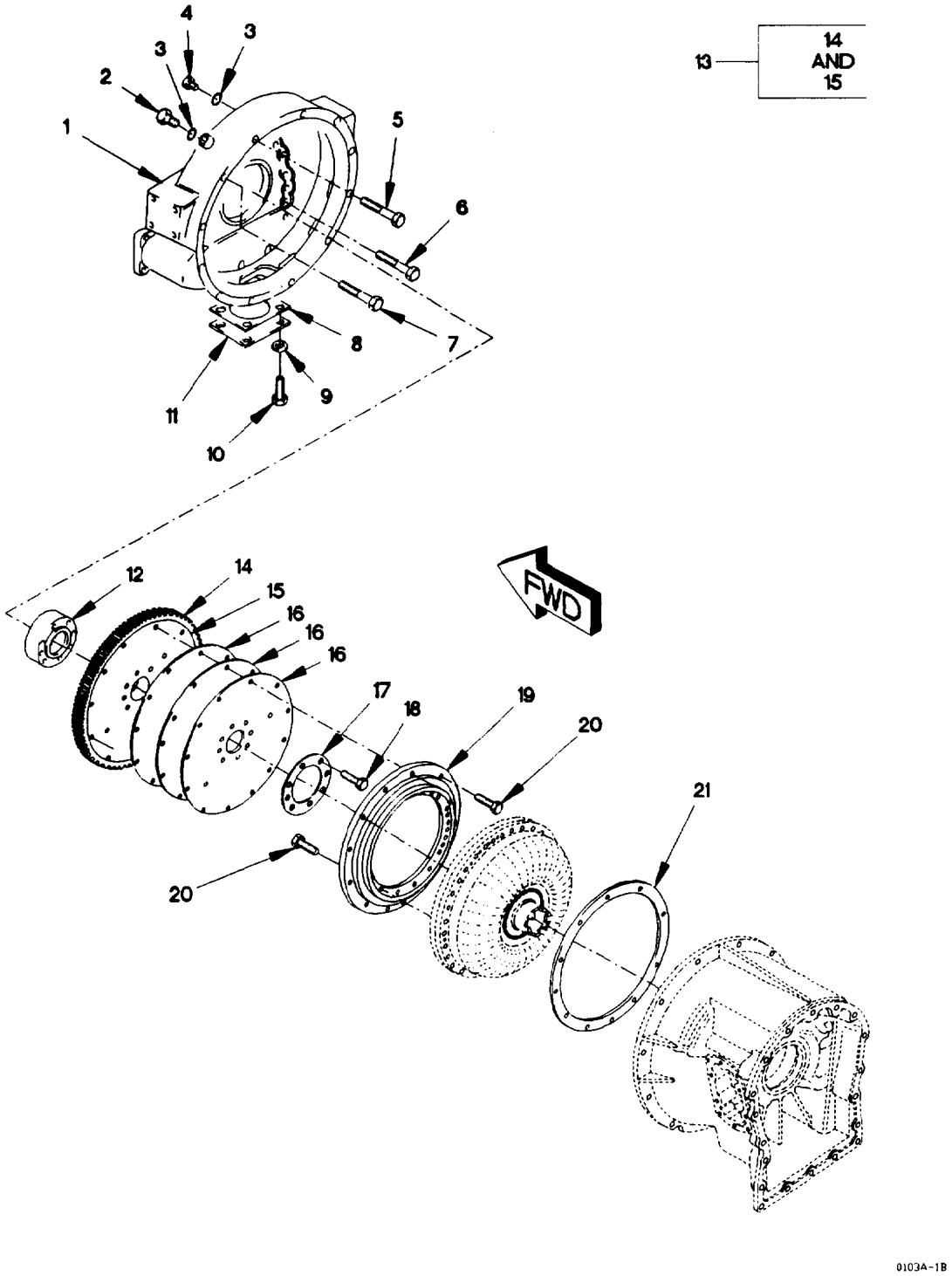

Figure 8. Flywheel, Housing and Flex Plates (Sheet 1 of 2)

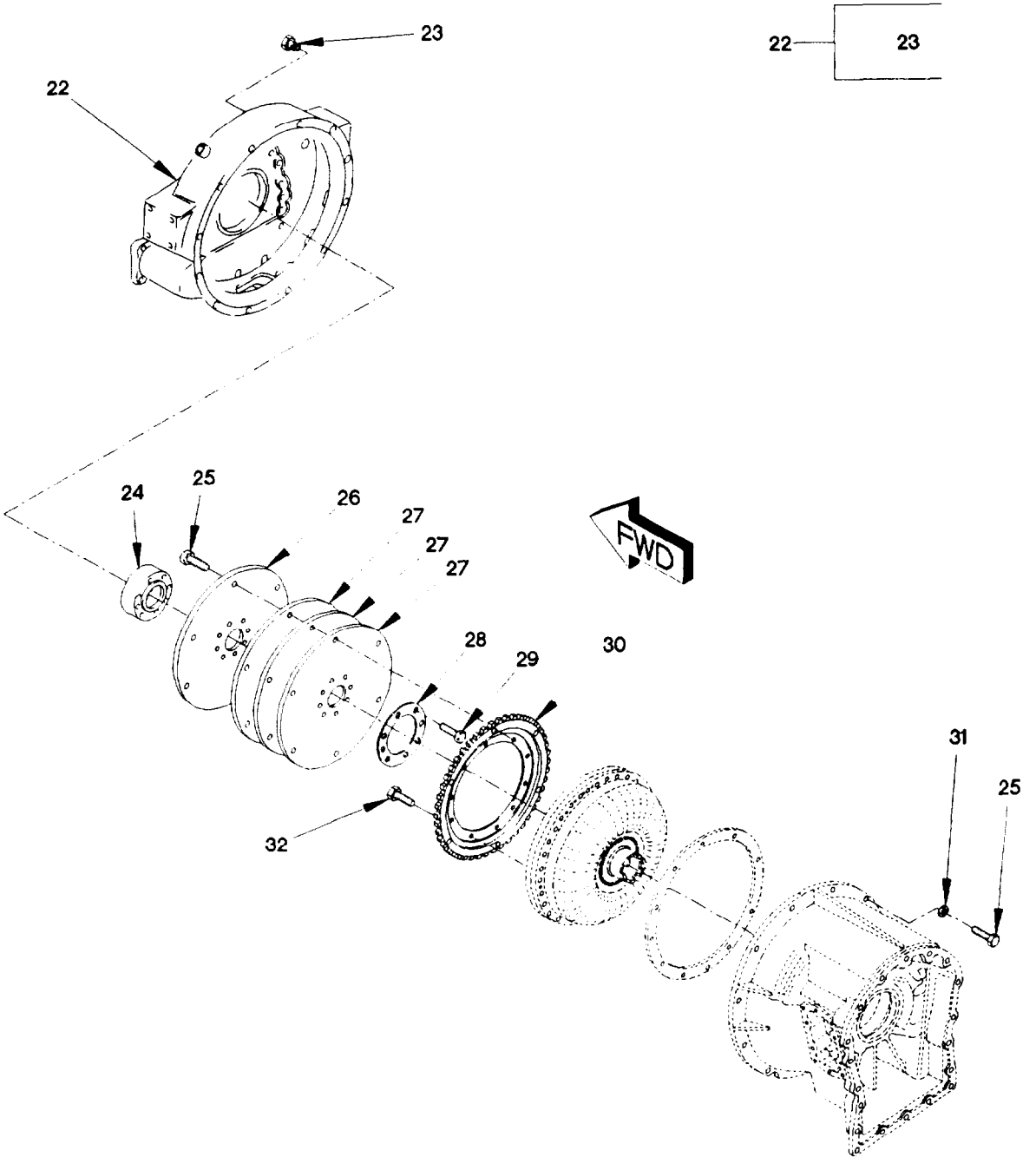

Figure 8. Flywheel, Housing and Flex Plates (Sheet 2 of 2)

(1) ITEM NO	(2) SMR CODE	(3) FSCM	(4) PART NUMBER	(5) DESCRIPTION AND USABLE ON CODE (UOC)	(6) QTY
				GROUP 0103: FLYWHEEL ASSEMBLY	
				FIG. 8 FLYWHEEL, HOUSING AND FLEX PLATES	
1	PAFZZ	11083	9Y7451	HOUSING, FLYWHEEL	1
2	PAFZZ	11083	9S4185	PLUG, MACHINE THREAD	1
3	PAFZZ	11083	3J7354	O-RING PART OF KIT P/N 7X2521	2
4	PAFZZ	11083	9S4182	PLUG, PROTECTIVE, DUS	1
5	PAFZZ	11083	8T4196	SCREW, CAP, HEXAGON H M10 X 1.5 X 35	2
6	PAFZZ	11083	7X3347	SCREW, SELF-LOCKING	10
7	PAFZZ	11083	8T7547	SCREW, CAP, HEXAGON H M8 X 1.25 X 30	1
8	PAFZZ	11083	3N4087	GASKET	1
9	PAFZZ	11083	8T4224	WASHER, FLAT	4
10	PAFZZ	11083	8T4189	BOLT, MACHINE M8 X 1.25 X 20	4
11	PAFZZ	11083	3N4088	COVER, ACCESS	1
12	PAFZZ	73342	29503046	PLATE, RETAINING, SHA	1
13	PAFFF	73342	29503042	GEAR AND DISC ASSEM	1
14	PAFZZ	73342	29503043	.GEAR, SPUR	1
15	PAFZZ	73342	29503045	.SHIM	1
16	PAFZZ	73342	29503045	SHIM	3
17	PAFZZ	73342	29503797	SPACER, PLATE	1
18	PAFZZ	56161	10501611	SCREW, CAP, HEXAGON H M12 X 1.75 X 45	8
19	PAFZZ	73342	29503525	PRESSURE PLATE ASSE	1
20	PAFZZ	73342	11505232	SCREW, CAP, HEXAGON H M8 X 1.25 X 25	22
21	PAFZZ	97907	6776456	GASKET	1
22	PAFZZ	11083	126-5874	HOUSING, FLYWHEEL	1
23	PAFZZ	11083	1B5170	.PLUG, PIPE	1
24	PAFZZ	73342	29523709	HUB, BODY	1
25	PAFZZ	73342	11515393	SCREW, CAP, HEXAGON H M10 X 1.25 X 30	18
26	KFFZZ	73342	29527691	FLEX PLATE/BOLT PLATE ASSEMBLY PART OF KIT P/N 29527692	1
27	KFFZZ	73342	29527690	FLEX PLATE PART OF KIT P/N 29527692	3
28	PAFZZ	73342	29523128	PLATE, WEAR, ROTARY P	1
29	PAFZZ	56161	10501611	SCREW, CAP, HEXAGON H M12 X 1.75 X 45	8
30	KFFZZ	73342	29511624	GEAR, SPUR PART OF KIT P/N 29513126	1
31	PAOZZ	27618	12084P11	WASHER, FLAT 13/32	12
32	PAFZZ	73342	11505232	SCREW, CAP, HEXAGON H M8 X 1.25 X 25	10
				END OF FIGURE	

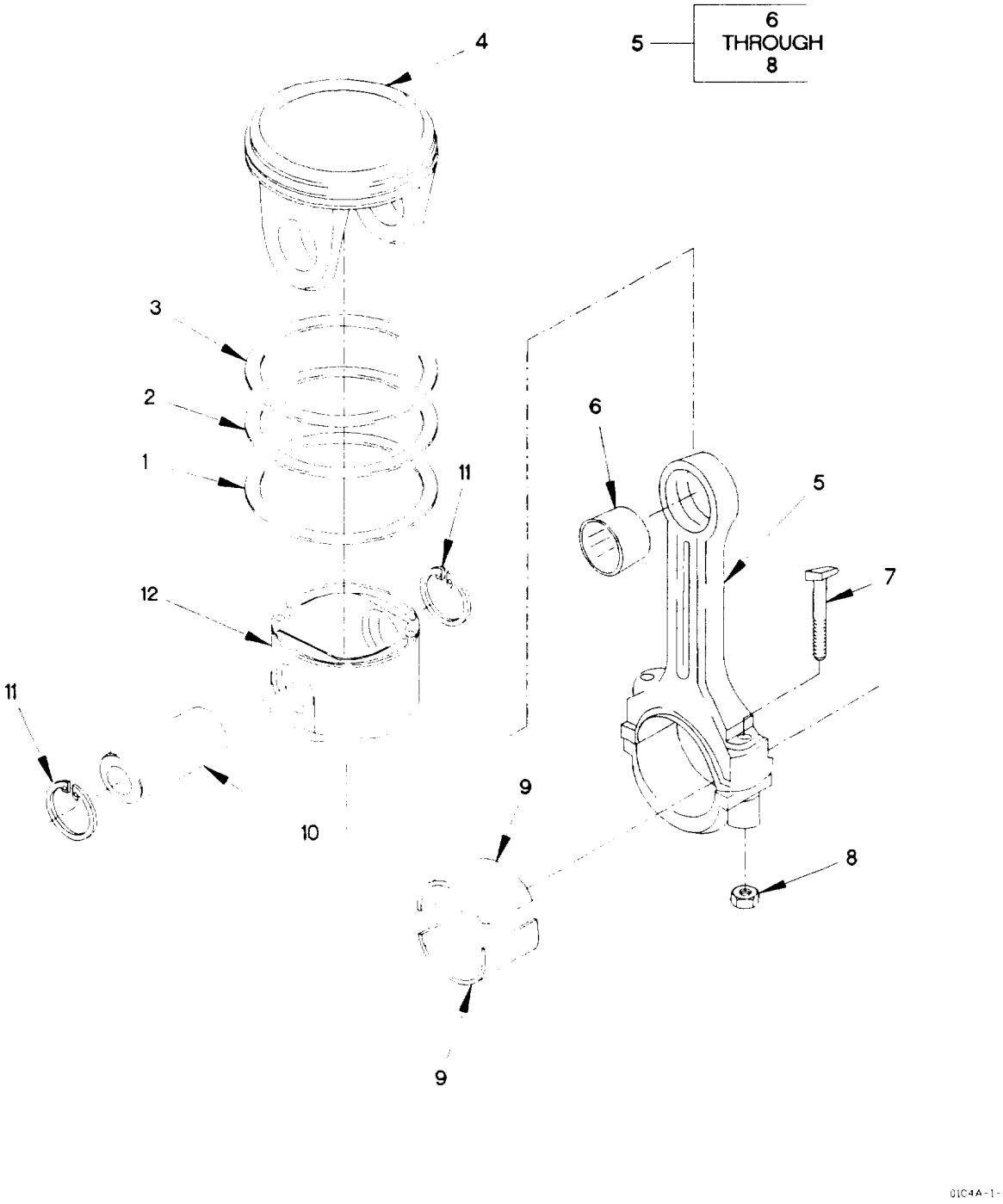

Figure 9. Piston and Push Rods

(1) ITEM NO	(2) SMR CODE	(3) FSCM	(4) PART NUMBER	(5) DESCRIPTION AND USABLE ON CODE (UOC)	(6) QTY
				GROUP 0104: PISTON, CONNECTING RODS	
				FIG. 9 PISTON AND PUSH RODS	
1	PAHZZ	11083	4P1806	RING, PISTON	6
2	PAHZZ	11083	4P1807	RING, PISTON	6
3	PAHZZ	11083	107-7548	RING, PISTON	6
4	PAHZZ	11083	6I4248	CROWN, PISTON INTERN	6
5	PAHZZ	11083	2W9128	CONNECTING ROD, PIST	6
6	PAHZZ	11083	2W0027	.BEARING, SLEEVE	1
7	PAHZZ	11083	9N3832	.BOLT	2
8	PAHZZ	11083	9L7669	.NUT, PLAIN, SINGLE BA 7/16-20	2
9	PAHZZ	11083	7C6976	BEARING, SLEEVE .25MM	6
9	PAHZZ	11083	7C6977	BEARING, SLEEVE .50MM	6
9	PAHZZ	11083	7W9415	BEARING, SLEEVE STANDARD	6
10	PAHZZ	11083	7C3901	PIN, PISTON	6
11	PAHZZ	11083	7C0111	RING, RETAINING	12
12	PAHZZ	11083	1077791	SKIRT PISTON	6
				END OF FIGURE	

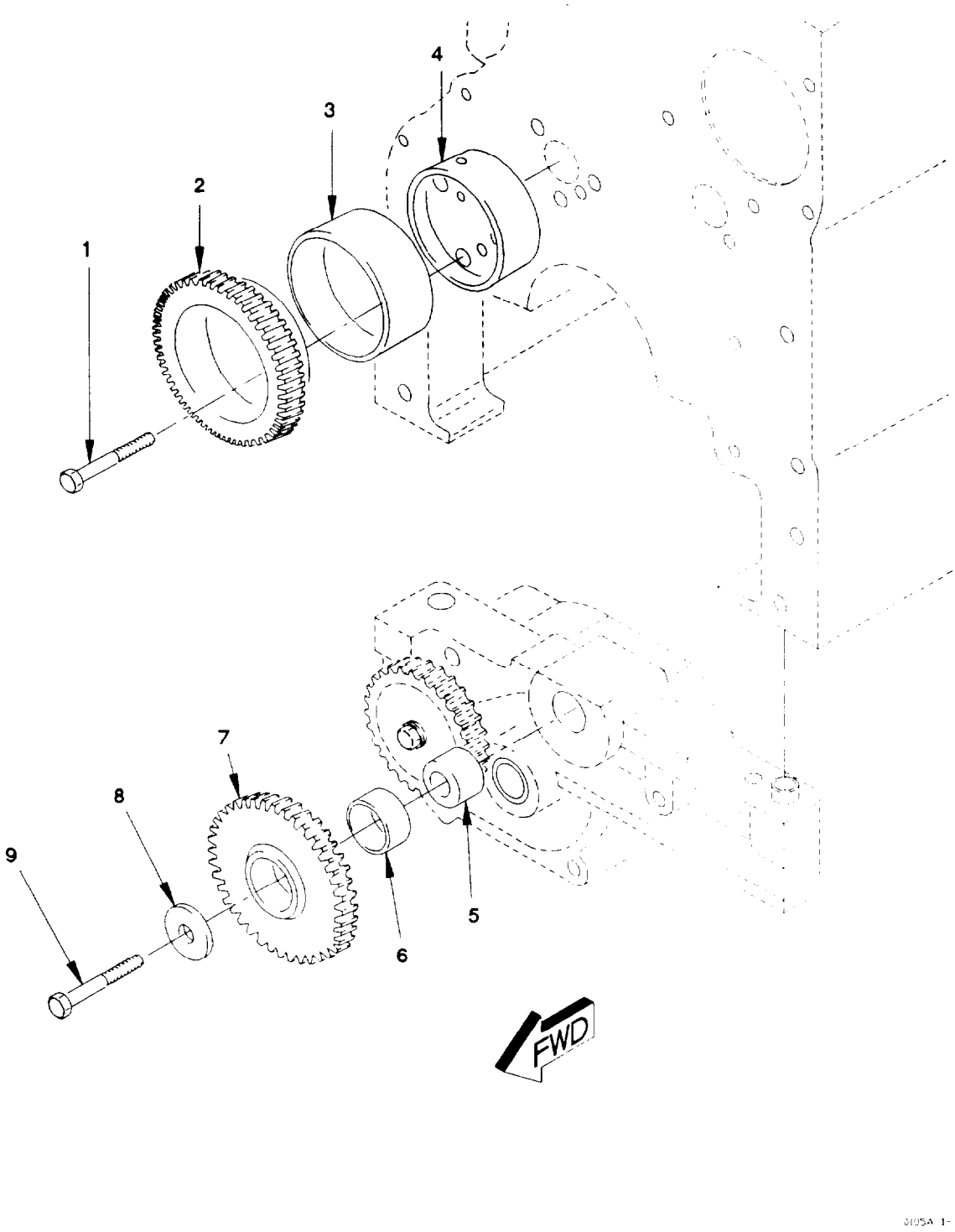

Figure 10. Idler Gear

(1) ITEM NO	(2) SMR CODE	(3) FSCM	(4) PART NUMBER	(5) DESCRIPTION AND USABLE ON CODE (UOC)	(6) QTY
				GROUP 0105: VALVES, CAMSHAFTS, AND TIMING SYSTEMS	
				FIG. 10 IDLER GEAR	
1	PAFZZ	11083	6V3822	SCREW, CAP, HEXAGON H M10 X 1.5 35	3
2	PAFZZ	11083	2W8476	GEAR, SPUR	1
3	PAFZZ	11083	2W7566	BEARING, SLEEVE	1
4	PAFZZ	11083	2W7565	HUB, BODY	1
5	PAFZZ	11083	7W9737	SPACER, RING	1
6	PAFZZ	11083	7W9930	BEARING, SLEEVE	1
7	PAFFF	11083	7W9740	GEAR, SPUR	1
8	PAFZZ	11083	7W9738	WASHER, FLAT	1
9	PAFZZ	11083	9X2305	SCREW, CAP, HEXAGON H M10 X 1.5 X 50	1
				END OF FIGURE	

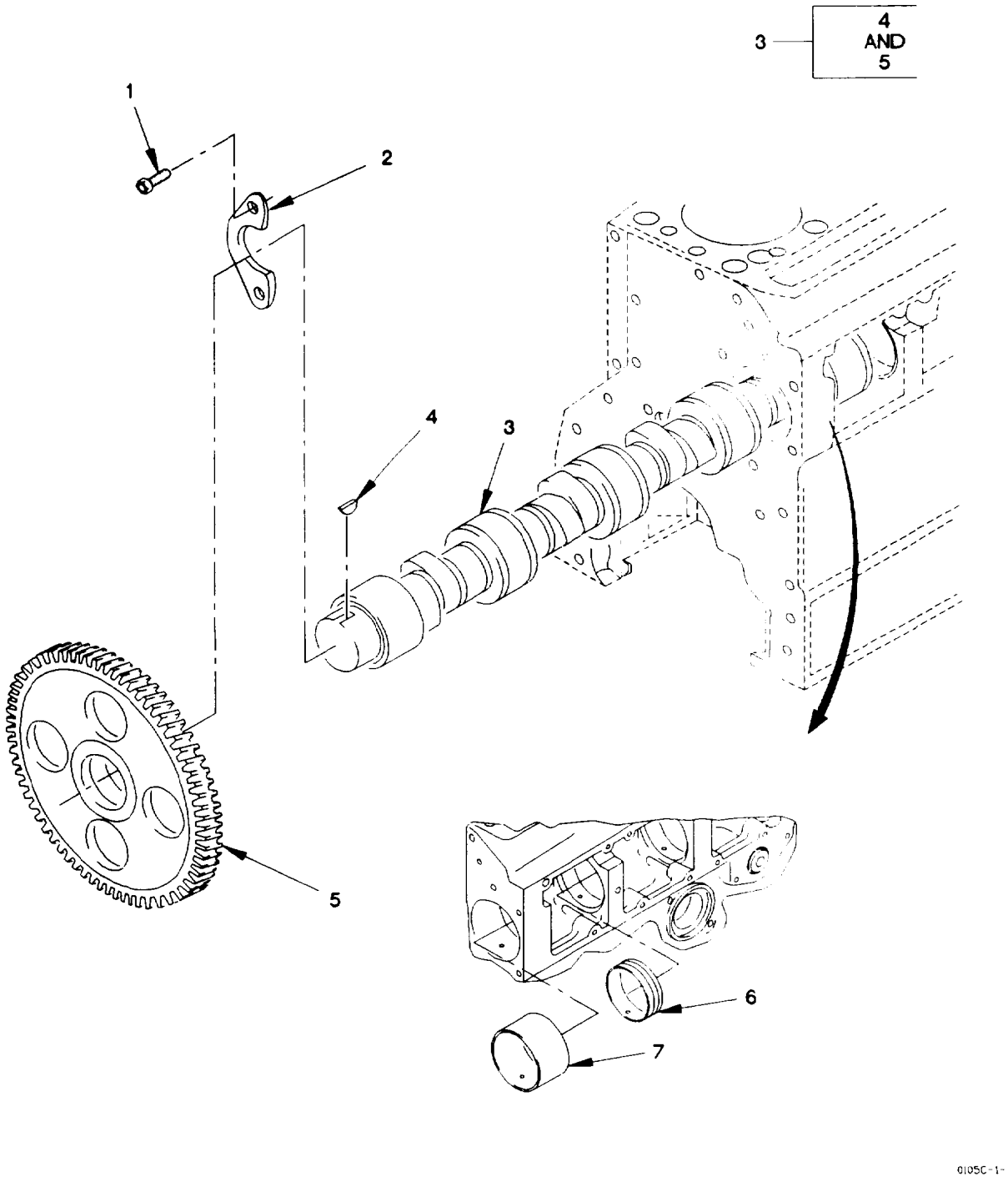

Figure 11. Camshaft

(1) ITEM NO	(2) SMR CODE	(3) FSCM	(4) PART NUMBER	(5) DESCRIPTION AND USABLE ON CODE (UOC)	(6) QTY
				GROUP 0105: VALVES, CAMSHAFTS, AND TIMING SYSTEMS	
				FIG. 11 CAMSHAFT	
1	PAHZZ	11083	6V3940	SCREW, CAP, HEXAGON H M8 X 1.25 X 25	2
2	PAHZZ	11083	107-7694	PLATE, RETAINING, SHA	1
3	PAHHH	11083	7W5426	CAMSHAFT, ENGINE	1
4	PAHZZ	96906	MS35756-9	.KEY, WOODRUFF	1
5	PAHZZ	11083	7W4070	.GEAR, SPUR	1
6	PAHZZ	11083	2W7213	BEARING, SLEEVE	6
7	PAHZZ	11083	2W7211	BEARING, SLEEVE	1
				END OF FIGURE	

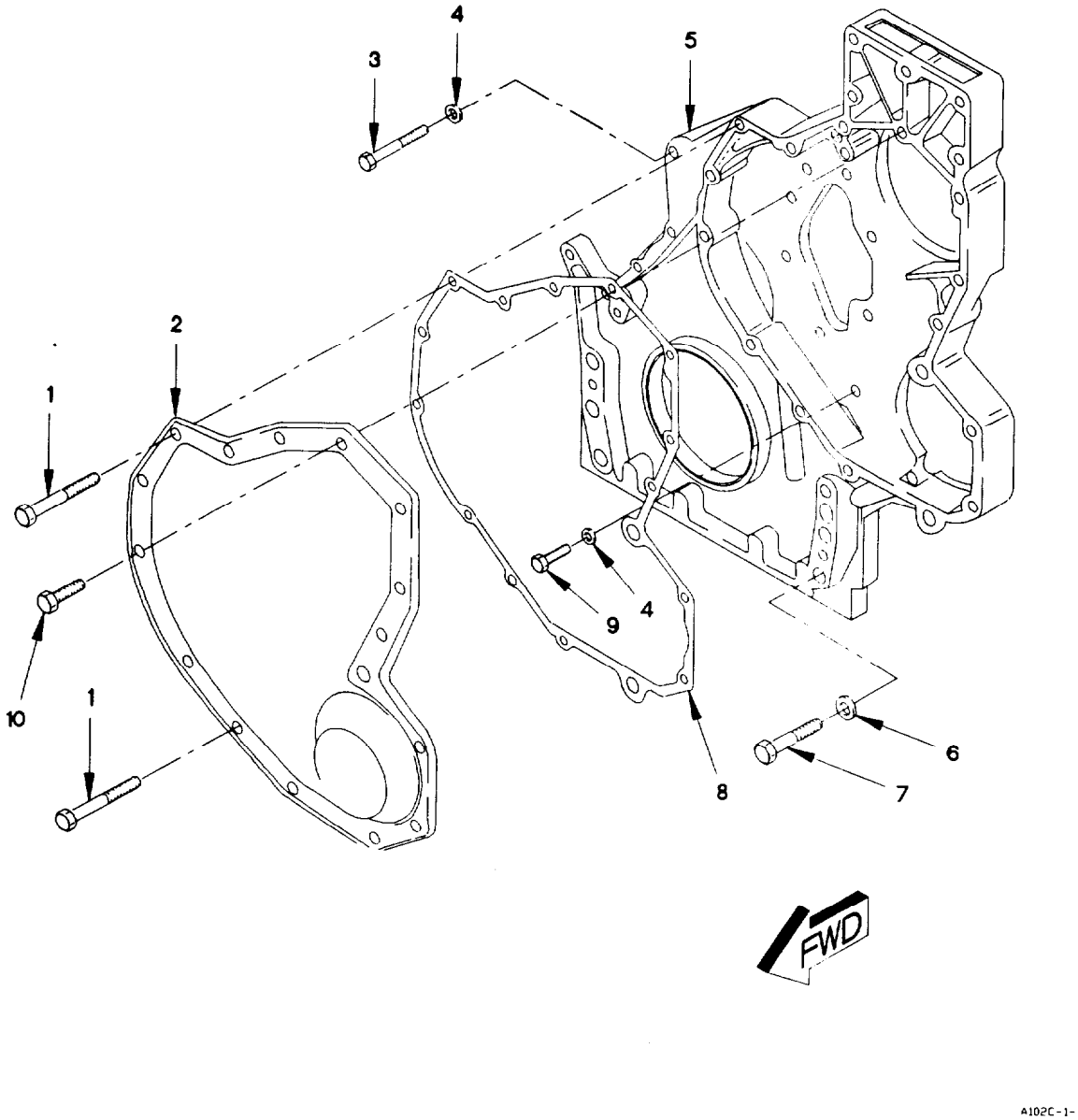

Figure 12. Front and Side Housing Covers, and Cam Followers
(Sheet 1 of 2)

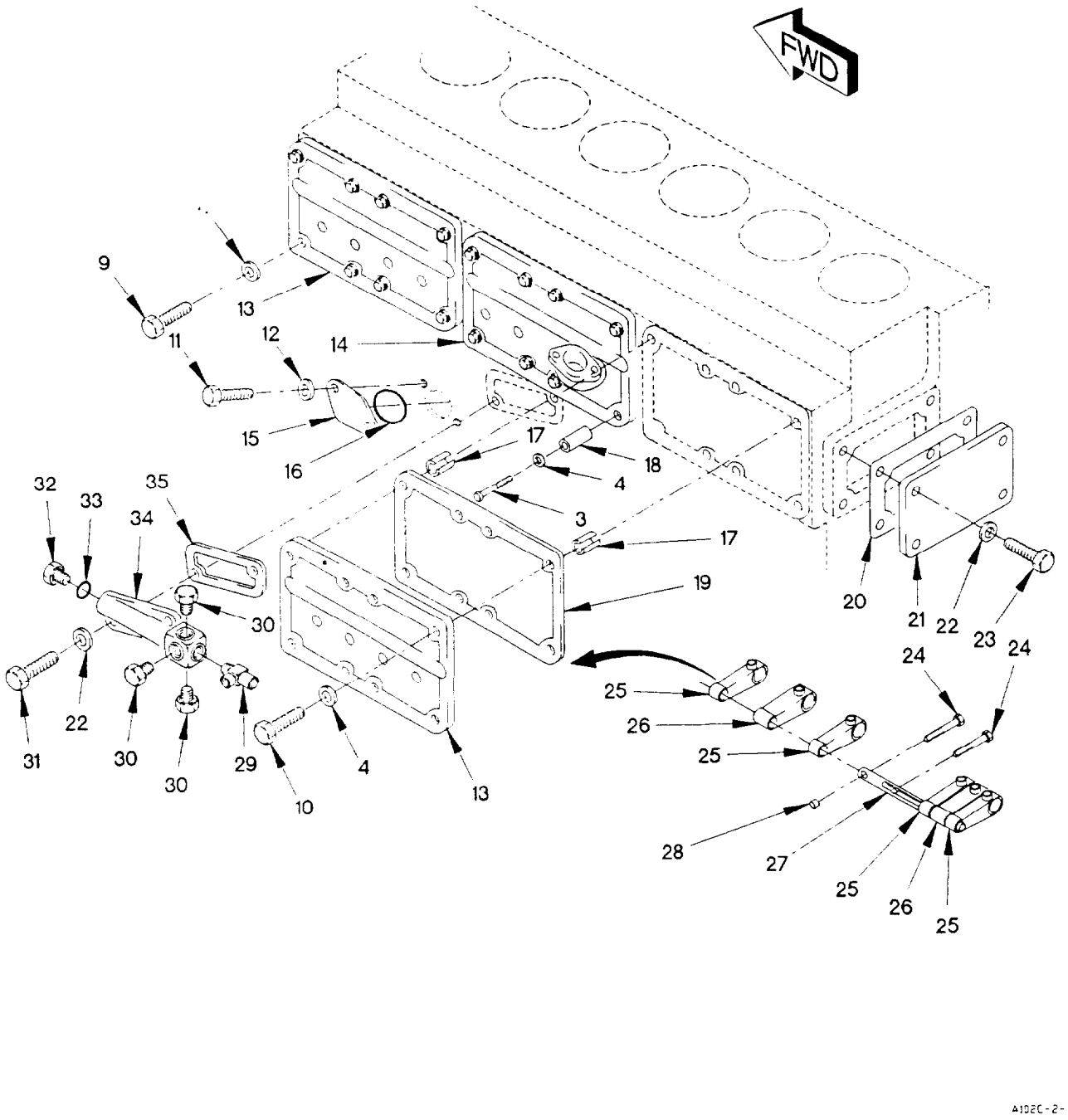

Figure 12. Front and Side Housing Covers, and Cam Followers
(Sheet 2 of 2)

(1) ITEM NO	(2) SMR CODE	(3) FSCM	(4) PART NUMBER	(5) DESCRIPTION AND USABLE ON CODE (UOC)	(6) QTY
				GROUP 0105: VALVES, CAMSHAFT, AND TIMING SYSTEMS	
				FIG. 12 FRONT AND SIDE HOUSING COVERS AND CAM FOLLOWERS	
1	PAFZZ	11083	8T0100	SCREW, CAP, HEXAGON H M8 X 1.25 X 60	2
2	PAFZZ	11083	9Y6668	COVER, ACCESS	1
3	PAFZZ	11083	6V3918	SCREW, CAP, HEXAGON H M8 X 1.25 X 50	3
4	PAFZZ	11083	9M1974	WASHER, FLAT M8.8	34
5	PAFZZ	11083	7E6366	HOUSING, MECHANICAL	1
6	PAFZZ	11083	5P8245	WASHER, FLAT M13.5	3
7	PAFZZ	11083	6V8336	SCREW, CAP, HEXAGON H M12 X 1.75 X 70	3
8	PAFZZ	11083	7W6552	GASKET PART OF KIT P/N 5R9051	1
9	PAFZZ	11083	6V5217	BOLT, MACHINE M8 X 1.25 X 20	19
10	PAFZZ	11083	6V2317	BOLT, MACHINE M8 X 1.25 X30	35
11	PAFZZ	11083	8T4137	BOLT, MACHINE M10 X 1.5 X 20	2
12	PAFZZ	11083	8T4121	WASHER, FLAT M11	2
13	PAFZZ	11083	7W3871	COVER, ENGINE POPPET	2
14	PAFZZ	11083	7W9395	COVER, ENGINE POPPET	1
15	PAFZZ	11083	4W8339	COVER, ACCESS	1
16	PAFZZ	11083	4F9653	O-RING PART OF KIT P/N 7X2521	1
17	PAFZZ	11083	7W3872	SHIELD, EXPANSION	6
18	PAFZZ	11083	392281	SPACER, SLEEVE	1
19	PAFZZ	11083	7W9699	GASKET PART OF KIT P/N 7X2521	3
20	PAFZZ	11083	7W2426	GASKET PART OF KIT P/N 7X2521	1
21	PAFZZ	11083	2W6544	COVER, ACCESS	1
22	PAFZZ	11083	8T4224	WASHER, FLAT	6
23	PAFZZ	11083	8T4189	BOLT, MACHINE M8 X 1.25 X 20	4
24	PAFZZ	11083	8T8442	SCREW, CAP, SOCKET HE M6 X 1 X 30	12
25	PAFZZ	11083	7W3989	ROCKER ARM, ENGINE P	12
26	PAFZZ	11083	7E6794	ROCKER ARM, ENGINE P	6
27	PAFZZ	11083	7W4339	SHAFT, STRAIGHT	3
28	PAFZZ	11083	7W4069	SPACER, SLEEVE	6
29	PAFZZ	11083	2D7325	TEE, PIPE	1
30	PAOZZ	11083	5M6213	PLUG, PIPE	3
31	PAFZZ	11083	7X0818	BOLT, MACHINE M8 X 1.25 X 45	2
32	PAFZZ	11083	9S4182	PLUG, PROTECTIVE, DUS	1
33	PAFZZ	11083	3J7354	O-RING	1
34	PAFZZ	11083	4P5153	MANIFOLD, HYDRAULIC	1
35	PAFZZ	11083	4F9029	O-RING PART OF KIT P/N 7X2521	1

END OF FIGURE

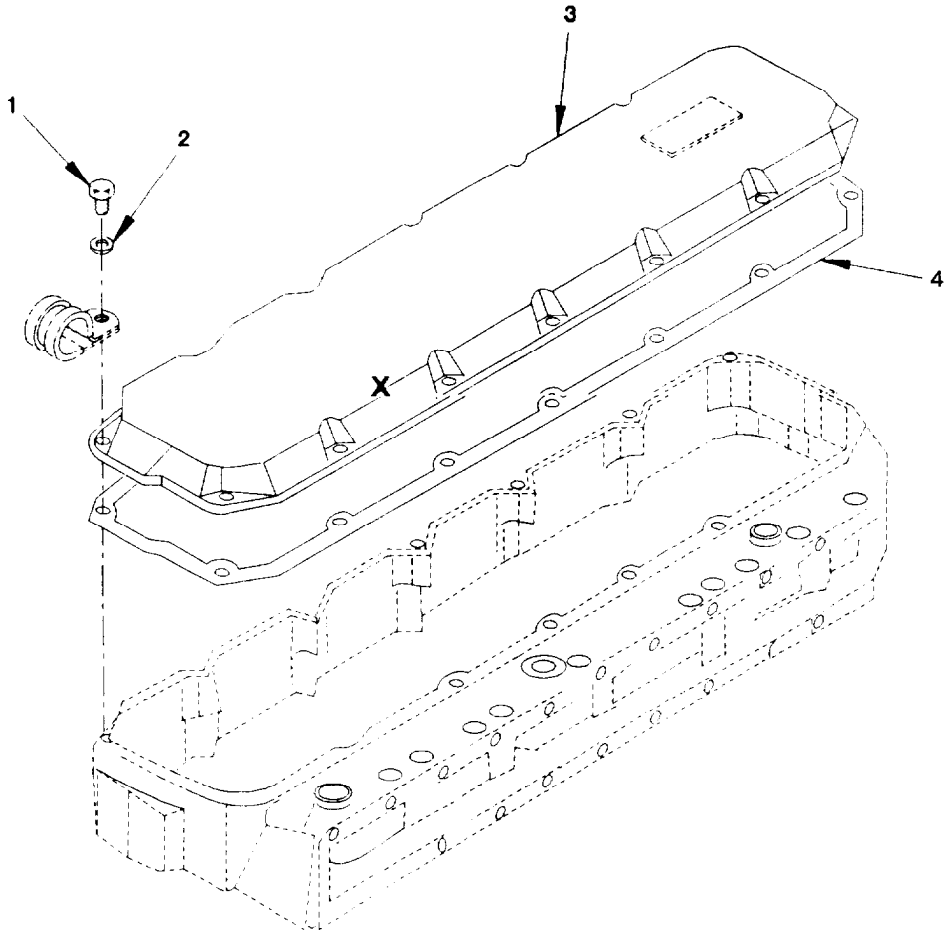

G105D-1-

Figure 13. Valve Cover and Gasket

(1) ITEM NO	(2) SMR CODE	(3) FSCM	(4) PART NUMBER	(5) DESCRIPTION AND USABLE ON CODE (UOC)	(6) QTY
				GROUP 0105: VALVES, CAMSHAFTS, AND TIMING SYSTEMS	
				FIG. 13 VALVE COVER AND GASKET	
1	PAOZZ	11083	6V2315	BOLT, MACHINE M6 X 1 X 35	14
2	PAOZZ	11083	5P0537	WASHER	14
3	PAOZZ	11083	119-2960	COVER, ENGINE POPPET	1
4	PAOZZ	11083	119-2940	GASKET	1
				END OF FIGURE	

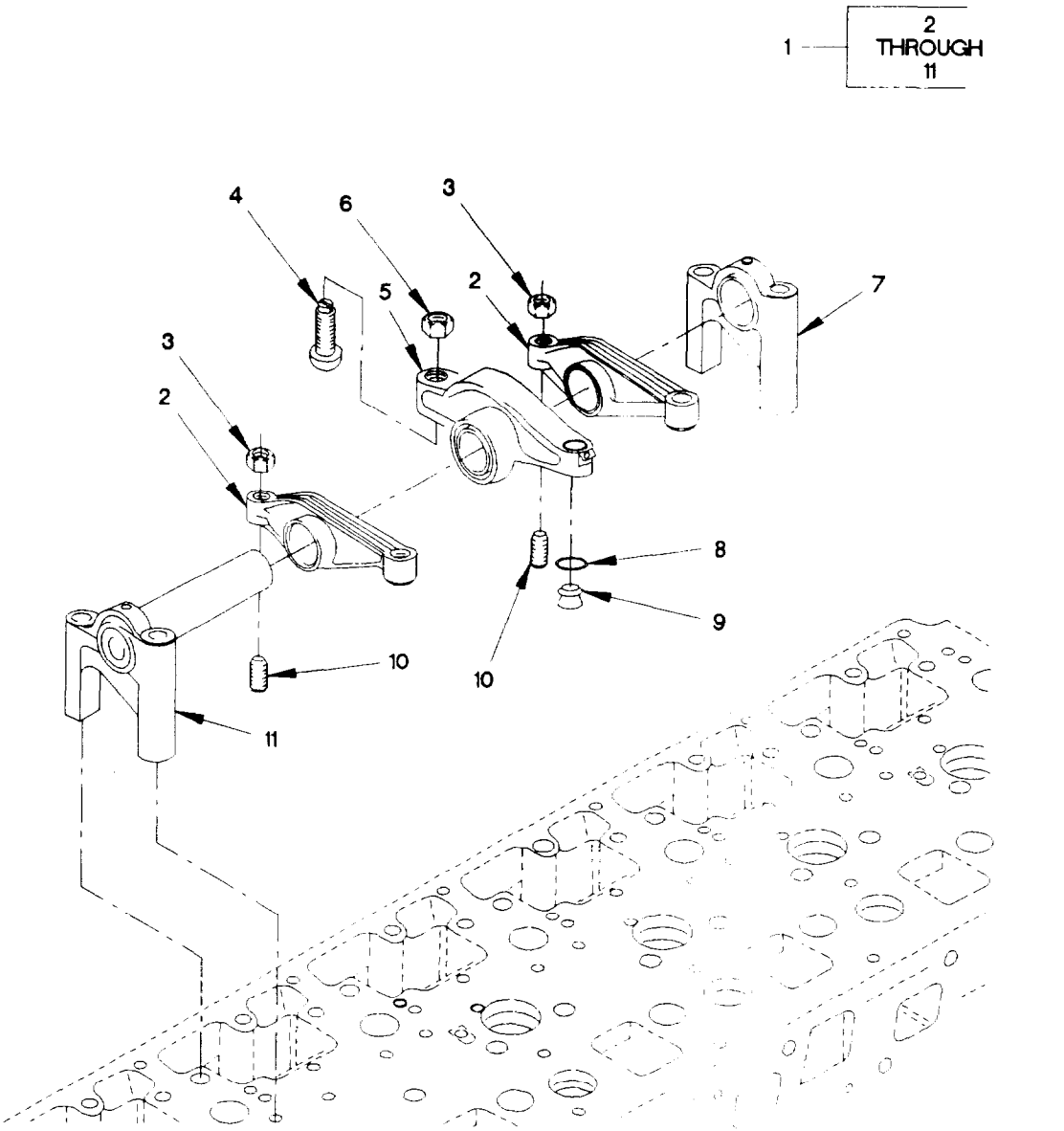

Figure 14. Rocker Arms

(1) ITEM NO	(2) SMR CODE	(3) FSCM	(4) PART NUMBER	(5) DESCRIPTION AND USABLE ON CODE (UOC)	(6) QTY
				GROUP 0105: VALVES, CAMSHAFTS, AND TIMING SYSTEMS	
				FIG. 14 ROCKER ARMS	
1	PAFFF	11083	107-7722	ROCKER ARM ASSEMBLY	6
2	PAFZZ	11083	6I0924	.ROCKER ARM, ENGINE P	2
3	PAFZZ	11083	2Y5829	.NUT, PLAIN, HEXAGON	2
4	PAFZZ	11083	9Y4973	.SCREW, ADJUSTING, VAL	1
5	PAFZZ	11083	105-1776	.ROCKER ARM, ENGINE P	1
6	PAFZZ	11083	7W4117	.NUT, PLAIN, HEXAGON M12 X 1.25	1
7	PAFZZ	11083	9Y8534	.BRACKET, ROCKER ARM	1
8	PAFZZ	11083	7W3983	.RING, RETAINING	1
9	PAFZZ	11083	9Y1582	.BUTTON, ROCKER ARM A	1
10	PAFZZ	11083	9Y4832	.SCREW, ADJUSTING, VAL	2
11	PAFZZ	11083	4P7792	.BRACKET, EYE, ROTATIN	1
				END OF FIGURE	

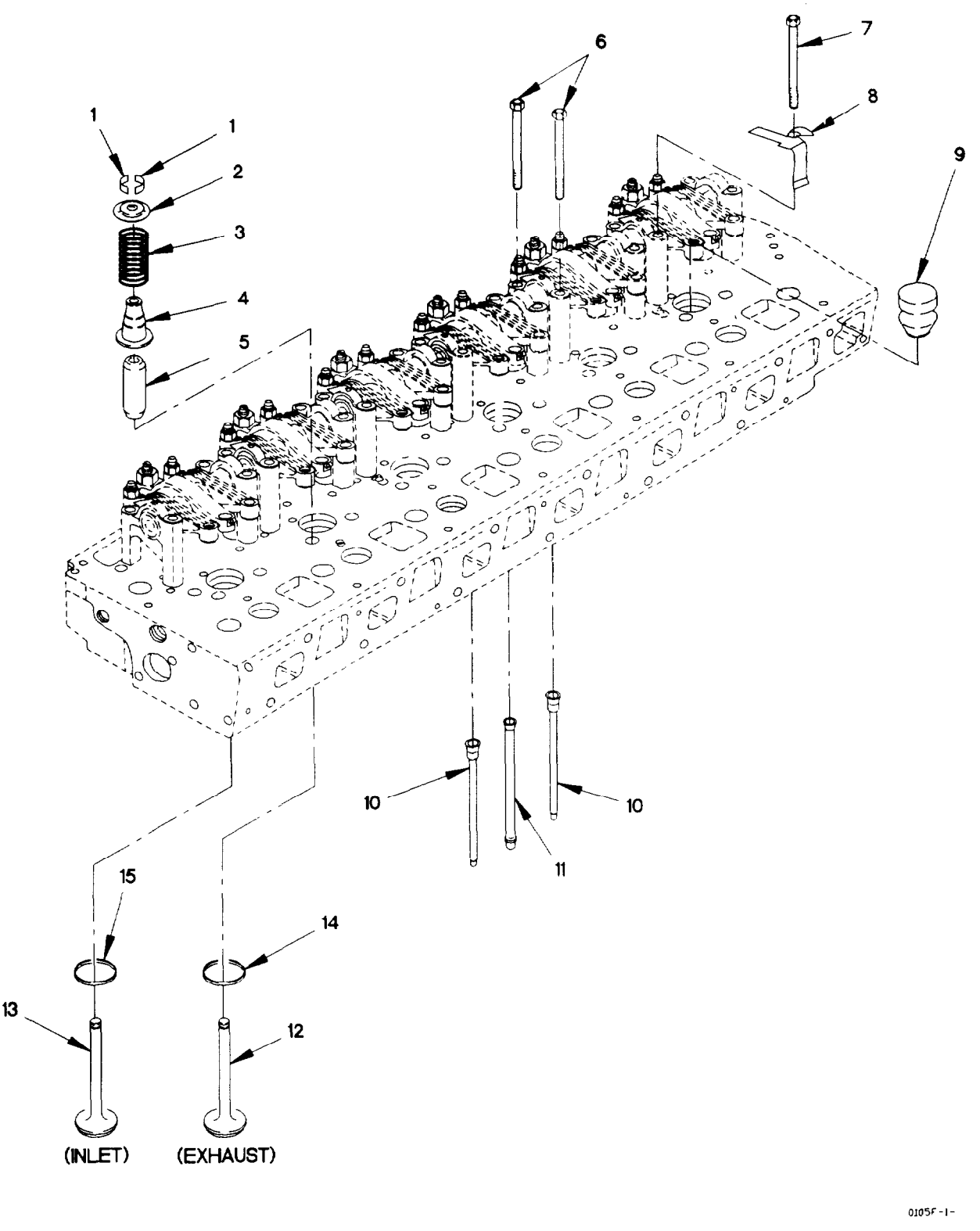

Figure 15. Push Rods, Valves, And Valve Springs

(1) ITEM NO	(2) SMR CODE	(3) FSCM	(4) PART NUMBER	(5) DESCRIPTION AND USABLE ON CODE (UOC)	(6) QTY
				GROUP 0105: VALVES, CAMSHAFTS, AND TIMING SYSTEMS	
				FIG. 15 PUSH RODS, VALVES AND VALVE SPRINGS	
1	PAHZZ	11083	1W2715	LOCK, VALVE SPRING R	24
2	PAHZZ	11083	7E7779	RETAINER, DISK, VALVE	12
3	PAHZZ	11083	7C4273	SPRING, HELICAL, COMP	12
4	KFHZZ	11083	119-3036	SEAL, "V" STEM PART OF KIT P/N 9X8318	12
5	PAHZZ	11083	9Y8848	GUIDE, VALVE STEM	12
6	PAFZZ	11083	6V5223	SCREW, CAP, HEXAGON H M8 X 1.25 X 100	23
7	PAFZZ	11083	9X6005	SCREW, CAP, HEXAGON H M8 X 1.25 X 100	1
8	PAFZZ	11083	7E5984	COVER, ACCESS	1
9	PAHZZ	11083	119-3061	CYLINDER SLEEVE	6
10	PAFZZ	11083	6I1241	PUSH ROD, ENGINE POP	12
11	PAFZZ	11083	4P8577	PUSH ROD, ENGINE POP POPPET VALVE	6
12	PAHZZ	11083	105-1779	VALVE, POPPET, ENGINE EXHAUST	6
13	PAHZZ	11083	7W8064	VALVE, POPPET, ENGINE INLET	6
14	PAHZZ	11083	1W2713	SEAT, VALVE	6
15	PAHZZ	11083	7W8065	SEAT, VALVE	6
				END OF FIGURE	

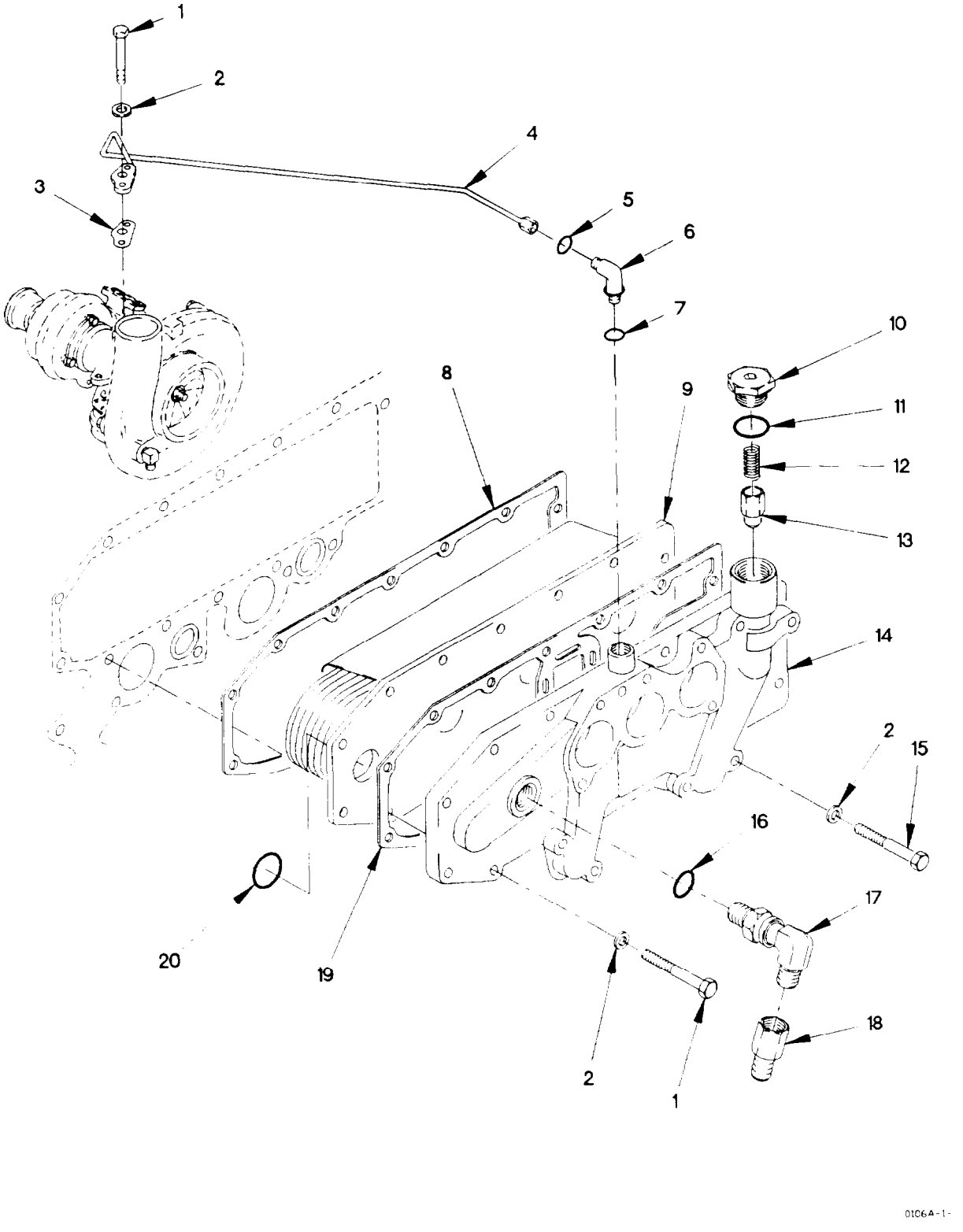

Figure 16. Oil Cooler

(1) ITEM NO	(2) SMR CODE	(3) FSCM	(4) PART NUMBER	(5) DESCRIPTION AND USABLE ON CODE (UOC)	(6) QTY
				GROUP 0106: ENGINE LUBRICATION SYSTEM	
				FIG. 16 OIL COOLER	
1	PAFZZ	11083	6V5218	SCREW, CAP, HEXAGON H M8 X 1.25 X 35	7
2	PAFZZ	11083	9M1974	WASHER, FLAT M8.8	14
3	PAFZZ	11083	1S7057	GASKET PART OF KIT P/N 4R9803, 7X2524, 7X2526, 9X8318	1
4	PAFZZ	11083	4P2907	TUBE ASSEMBLY, METAL	1
5	PAFZZ	11083	A82777	O-RING PART OF KIT P/N 7X2526	1
6	PAFZZ	11083	6V8724	ELBOW, PIPE	1
7	PAFZZ	11083	3J1907	O-RING PART OF KIT P/N 7X2526	1
8	PAFZZ	11083	7C1160	GASKET PART OF KIT P/N 7X2524	1
9	PAFZZ	11083	7W5903	CORE ASSEMBLY, FLUID	1
10	PAFZZ	11083	5P8196	PLUG, PROTECTIVE, DUS	1
11	PAFZZ	11083	2M9780	PACKING, PREFORMED PART OF KIT P/N 7X2524	1
12	PAFZZ	11083	9L9188	SPRING, HELICAL, COMP	1
13	PAFZZ	11083	7C1493	VALVE, CHECK	1
14	PAFZZ	11083	9Y9293	COOLER, FLUID, TRANSM	1
15	PAFZZ	11083	8T0276	SCREW, CAP, HEXAGON H M8 X 1.25 X 45	7
16	PAFZZ	11083	3K0360	O-RING PART OF KIT P/N 7X2524	1
17	PAFZZ	11083	307947	ELBOW, TUBE TO BOSS	1
18	PAOZZ	96906	MS51534A6-4	REDUCER, TUBE	1
19	PAFZZ	11083	7E9817	GASKET PART OF KIT P/N 7X2524	1
20	PAFZZ	11083	8M4445	O-RING PART OF KIT P/N 7X2524	2
				END OF FIGURE	

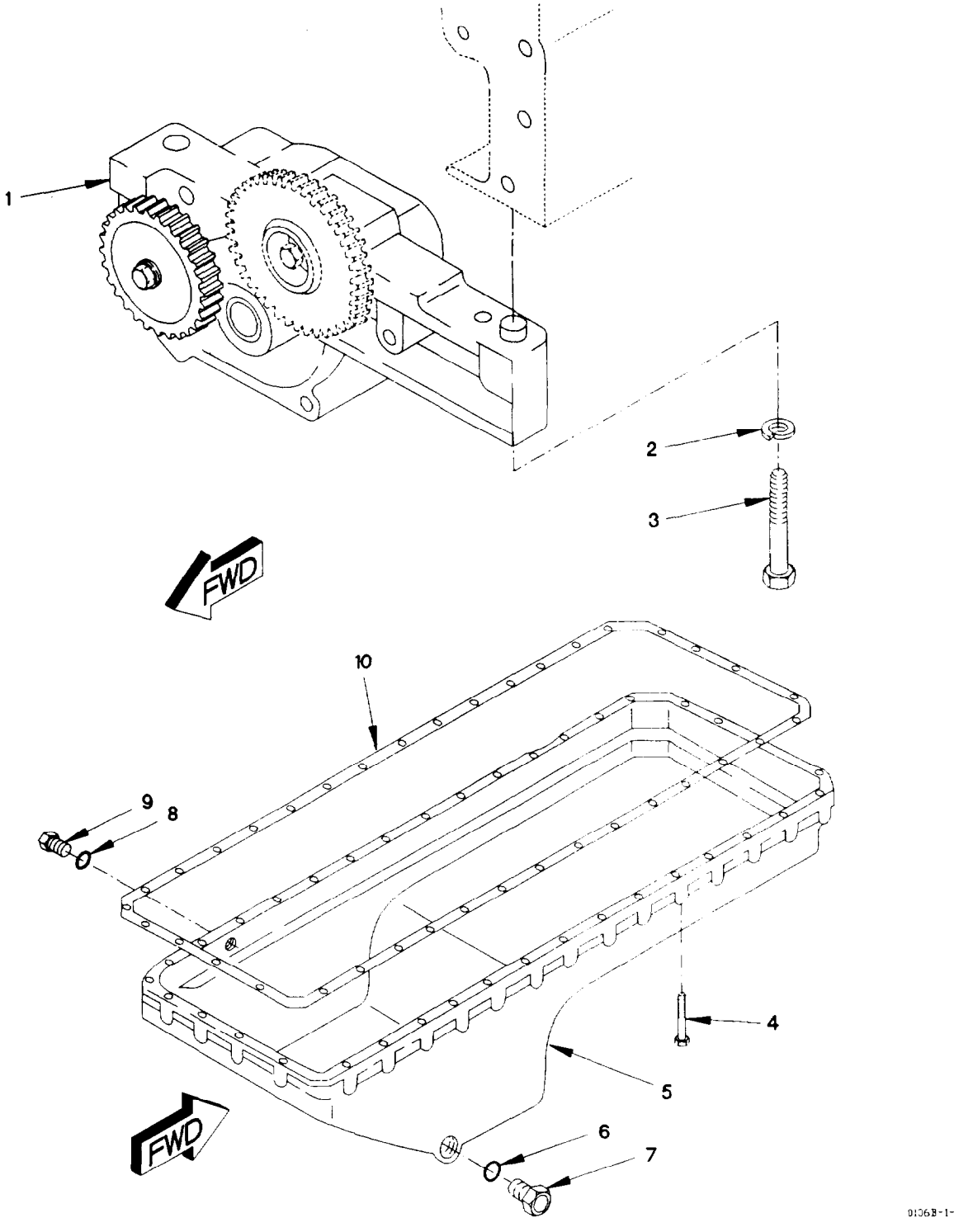

Figure 17. Oil Pan and Oil Pump

(1) ITEM NO	(2) SMR CODE	(3) FSCM	(4) PART NUMBER	(5) DESCRIPTION AND USABLE ON CODE (UOC)	(6) QTY
				GROUP 0106: ENGINE LUBRICATION SYSTEM FIG. 17 OIL PAN AND OIL PUMP	
1	PAFZZ	11083	119-2924	PUMP, ROTARY	1
2	PAFZZ	11083	6V5839	WASHER, LOCK	2
3	PAFZZ	11083	6V5815	SCREW, CAP, HEXAGON H M10 X 1.5 X 75	2
4	PAFZZ	11083	6I3812	BOLT, ASSEMBLED WASH	36
5	PAFZZ	11083	146-7477	OIL PAN	1
6	PAOZZ	78640	8L2786	PACKING, PREFORMED PART OF KIT P/N 7X2521	1
7	PAOZZ	11083	7E2313	PLUG, PIPE	1
8	PAOZZ	11083	3J1907	O-RING PART OF KIT P/N 7X2524	1
9	PAOZZ	11083	9S8004	PLUG, MACHINE THREAD	1
10	PAFZZ	11083	115-4202	GASKET PART OF KIT P/N 7X2521	1
				END OF FIGURE	

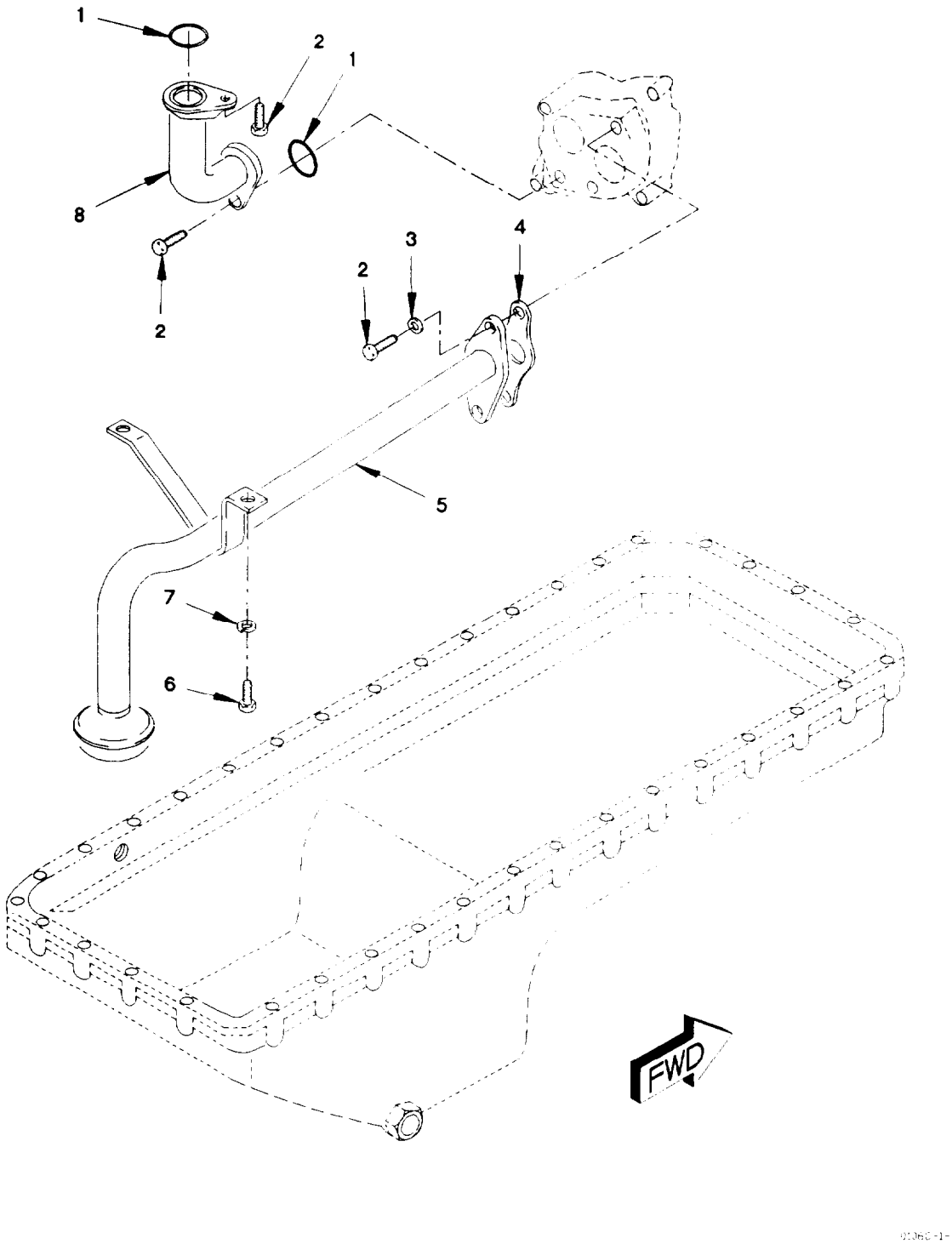

Figure 18. Oil Hoses and Tubes

(1) ITEM NO	(2) SMR CODE	(3) FSCM	(4) PART NUMBER	(5) DESCRIPTION AND USABLE ON CODE (UOC)	(6) QTY
				GROUP 0106: ENGINE LUBRICATION SYSTEM FIG. 18 OIL HOSES AND TUBES	
1	PAFZZ	11083	3P1156	PACKING, PREFORMED PART OF KIT P/N 7X2521	2
2	PAFZZ	11083	6V3940	SCREW, CAP, HEXAGON H M8 X 1.25 X 25	4
3	PAFZZ	11083	9M1974	WASHER, FLAT M8.8	2
4	PAFZZ	11083	7W5340	GASKET PART OF KIT P/N 7X2521	1
5	PAFZZ	11083	9Y9854	TUBE ASSEMBLY, METAL	1
6	PAFZZ	11083	6V4248	SCREW, CAP, HEXAGON H M10 X 1.5 X 25	2
7	PAFZZ	11083	6V5839	WASHER, LOCK	2
8	PAFZZ	11083	4W2232	ELBOW, PIPE	1
				END OF FIGURE	

Figure 19. Engine Oil Sampling Valve

(1) ITEM NO	(2) SMR CODE	(3) FSCM	(4) PART NUMBER	(5) DESCRIPTION AND USABLE ON CODE (UOC)	(6) QTY
				GROUP 0106: ENGINE LUBRICATION SYSTEM	
				FIG. 19 ENGINE OIL SAMPLING VALVE	
1	PAOZZ	19207	12418003	HOSE ASSEMBLY, NONME	1
2	PAOZZ	81343	4-070118C	RING, EXTERNALLY THR	1
3	PAOZZ	19207	12418005	BRACKET, MOUNTING	1
4	PAOZZ	0FW39	12414643	SLEEVE, DIRECTIONAL	1
				END OF FIGURE	

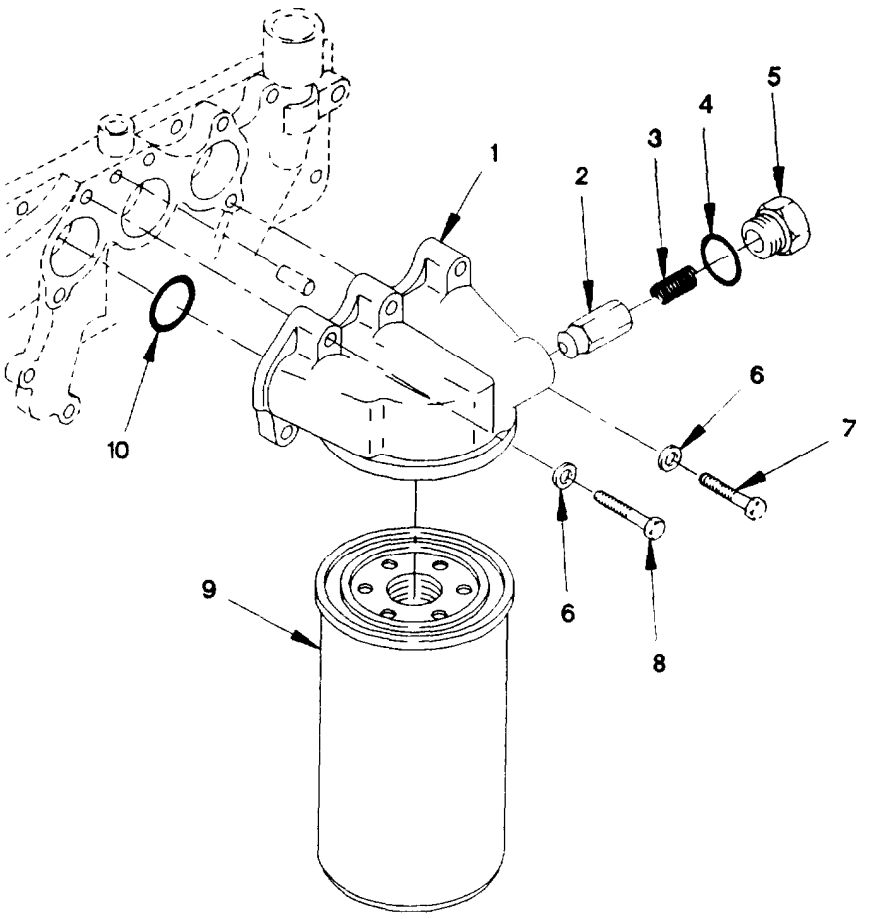

Figure 20. Engine Oil Filter and Filter Base

(1) ITEM NO	(2) SMR CODE	(3) FSCM	(4) PART NUMBER	(5) DESCRIPTION AND USABLE ON CODE (UOC)	(6) QTY
				GROUP 0106: ENGINE LUBRICATION SYSTEM	
				FIG. 20 ENGINE OIL FILTER AND FILTER BASE	
1	PAFZZ	11083	7W9028	HEAD, FLUID FILTER	1
2	PAFZZ	11083	7C1493	VALVE, CHECK	1
3	PAFZZ	11083	9L9188	SPRING, HELICAL COMP	1
4	PAFZZ	11083	2M9780	PACKING, PREFORMED	1
5	PAFZZ	11083	5P8196	PLUG, PROTECTIVE, DUS	1
6	PAFZZ	11083	9M1974	WASHER, FLAT M8.8	5
7	PAOZZ	11083	6V2317	BOLT, MACHINE M8 X 1.25 X 30	2
8	PAFZZ	11083	6V5219	SCREW, CAP, HEXAGON H M8 X 1.25 X 40	3
9	PAOZZ	11083	1R0739	FILTER ELEMENT, FLUI	1
10	PAFZZ	11083	5F9657	O-RING PART OF KIT P/N 7X2524	3
				END OF FIGURE	

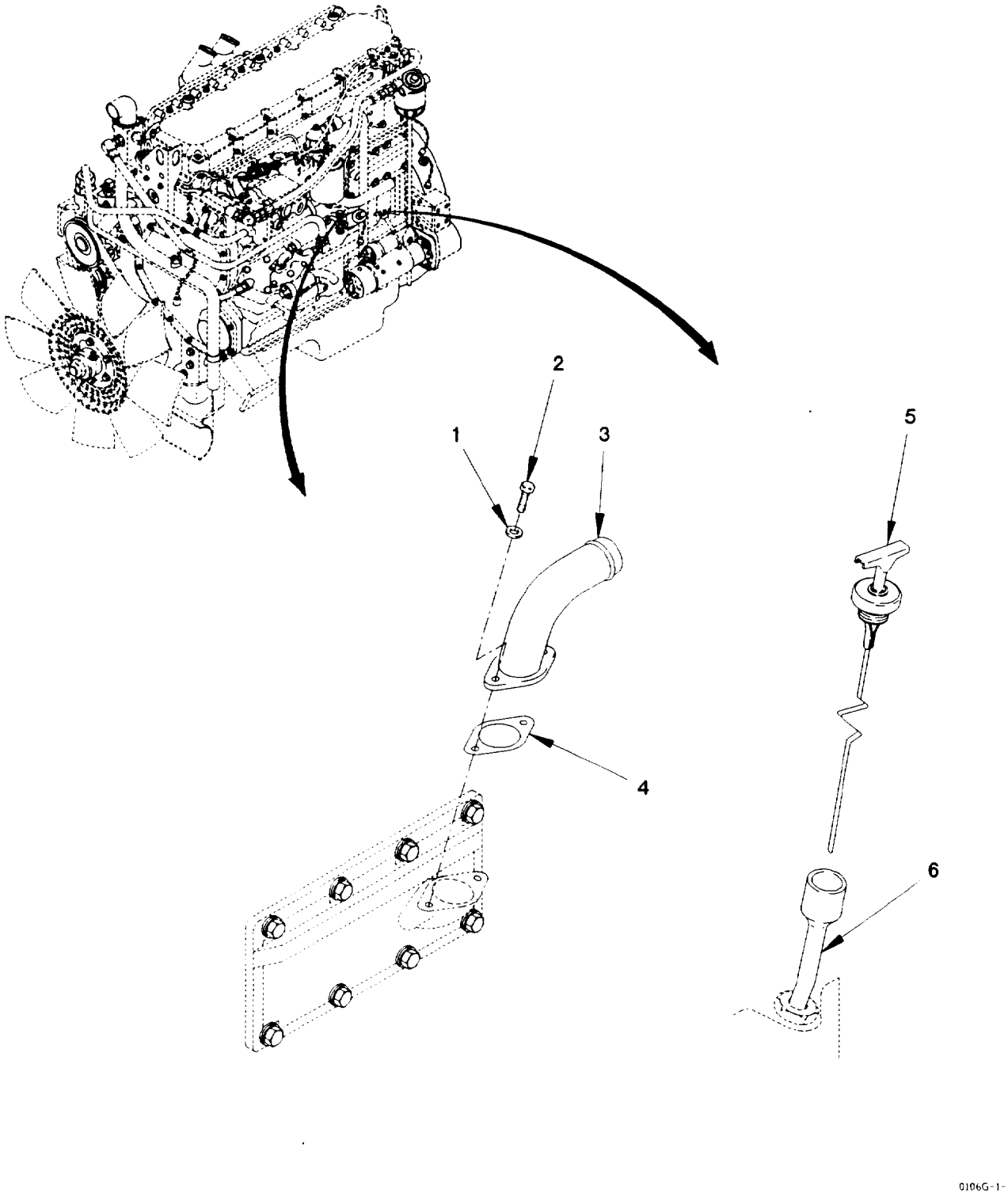

Figure 21. Engine Oil Dipstick and Filler Tube (Sheet 1 of 3)

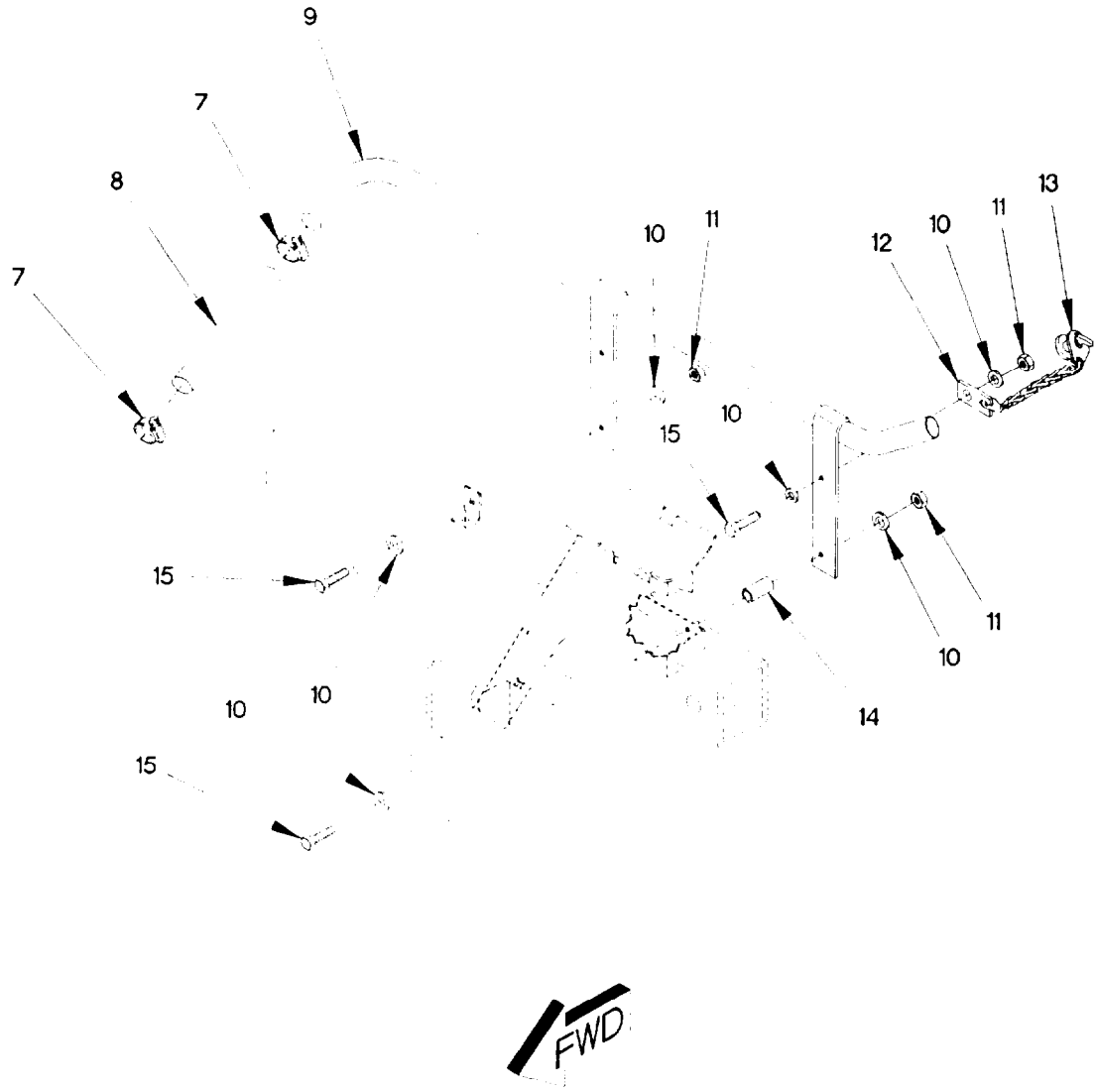

A106G-2-

Figure 21. Engine Oil Dipstick and Filler Tube (Sheet 2 of 3)

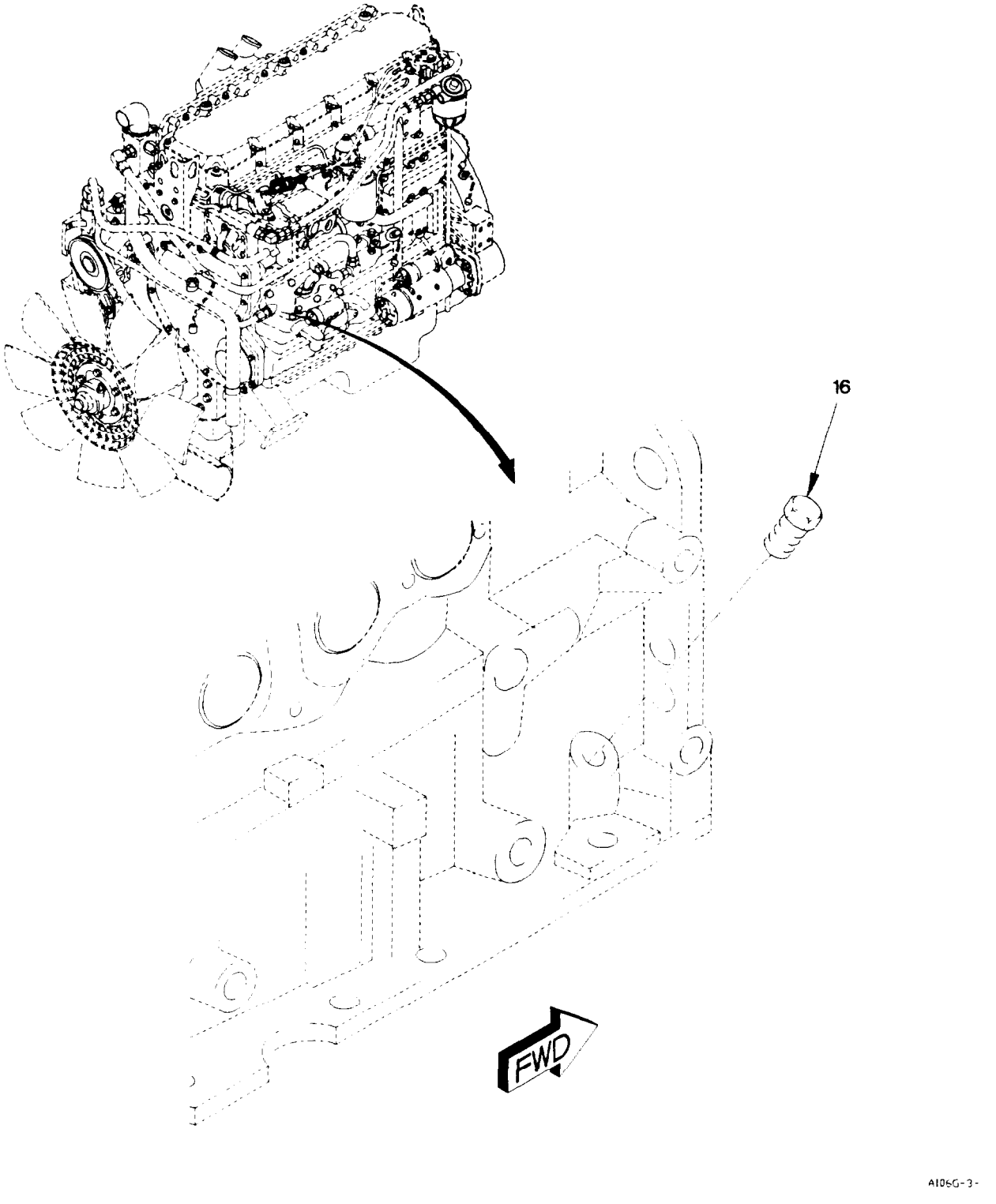

Figure 21. Engine Oil Dipstick and Filler Tube (Sheet 3 of 3)

(1) ITEM NO	(2) SMR CODE	(3) FSCM	(4) PART NUMBER	(5) DESCRIPTION AND USABLE ON CODE (UOC)	(6) QTY
				GROUP 0106: ENGINE LUBRICATION SYSTEM	
				FIG. 21 ENGINE OIL DIPSTICK AND FILLER TUBE	
1	PAOZZ	11083	9M1974	WASHER, FLAT M8.8	2
2	PAOZZ	11083	6V3940	SCREW, CAP, HEXAGON H M8 X 1.25 X 25	2
3	PAOZZ	11083	4R9237	TUBE ASSEMBLY, METAL	1
4	PAOZZ	11083	7C0358	GASKET PART OF KIT P/N 7X2521	1
5	PAOZZ	11083	109-2988	GAGE ROD, LIQUID LEV ENGINE OIL DIPSTICK	1
6	PAOZZ	11083	5R8833	TUBE ASSEMBLY, METAL	1
7	PAOZZ	66295	WWD48-58H	CLAMP, HOSE	2
8	PAOZZ	19207	12418460-001	HOSE, PREFORMED	1
9	PAOZZ	19207	12414442	TUBE, BENT, METALLIC UOC: LAA, LAB, LAD, LWB, LWD,	1
9	PAOZZ	19207	12420425	TUBE, METALLIC, BRANC UOC: LAC, LWC,	1
10	PAOZZ	34914	990 3861	WASHER, FLAT M8.4	9
11	PAOZZ	19207	12414315-006	NUT, SELF-LOCKING, HE M8 X 1.25 UOC: LAA, LAB, LAD, LWB, LWD,	4
12	PAOZZ	19207	12414461	PLATE, MOUNTING	1
13	PAOZZ	01943	EXP25359	CAP, FILLER OPENING	1
14	PAOZZ	19207	12417700	BEARING, SLEEVE UOC: LAC, LWC,	1
15	PAOZZ	81495	071 408 32	BOLT, MACHINE M8 X 1.25 X 45 UOC: LAA, LAB, LAD, LWB, LWD,	4
15	PAOZZ	19207	12414419-097	SCREW, CAP, HEXAGON H M8 X 1.25 X 45 UOC: LAC, LWC,	1
16	PAHZZ	11083	1S2563	PLUG	1
				END OF FIGURE	

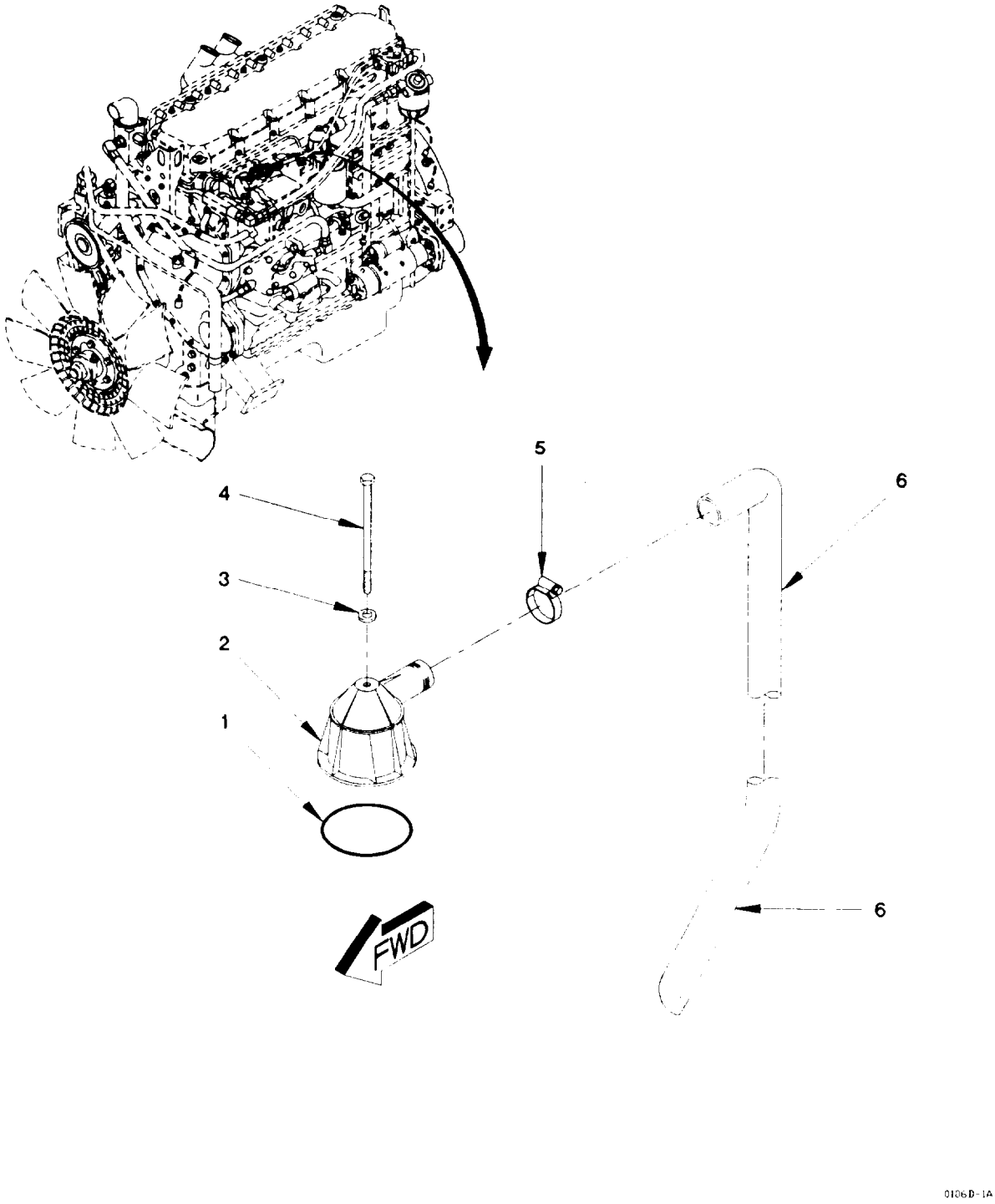

Figure 22. Crankcase Breather

(1) ITEM NO	(2) SMR CODE	(3) FSCM	(4) PART NUMBER	(5) DESCRIPTION AND USABLE ON CODE (UOC)	(6) QTY
				GROUP 0106: ENGINE LUBRICATION SYSTEM FIG. 22 CRANKCASE BREATHER	
1	PAOZZ	11083	4L9564	PACKING, PREFORMED PART OF KIT P/N 9X8318	1
2	PFOZZ	18265	BAS02-0072	BREATHER	1
3	PAOZZ	11083	9N869	WASHER	1
4	PAOZZ	11083	6V3821	SCREW, CAP, HEXAGON H M8 X 1.25 X 110	1
5	PAOZZ	11083	9M2904	CLAMP	1
6	PAOZZ	11083	7C0952	HOSE, PREFORMED	1
				END OF FIGURE	

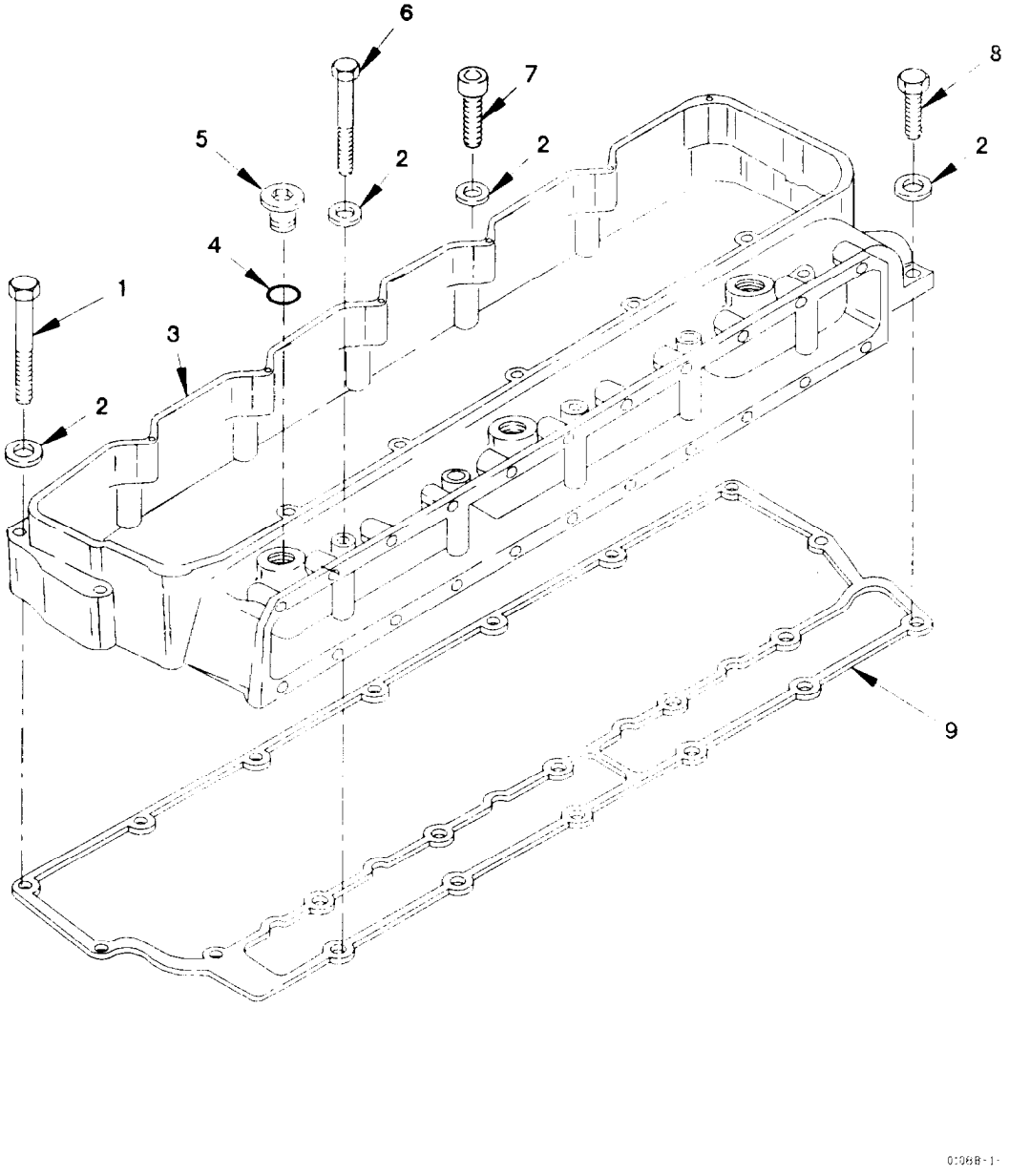

Figure 23. Inlet Manifold, Gasket, and Cover (Sheet 1 of 2)

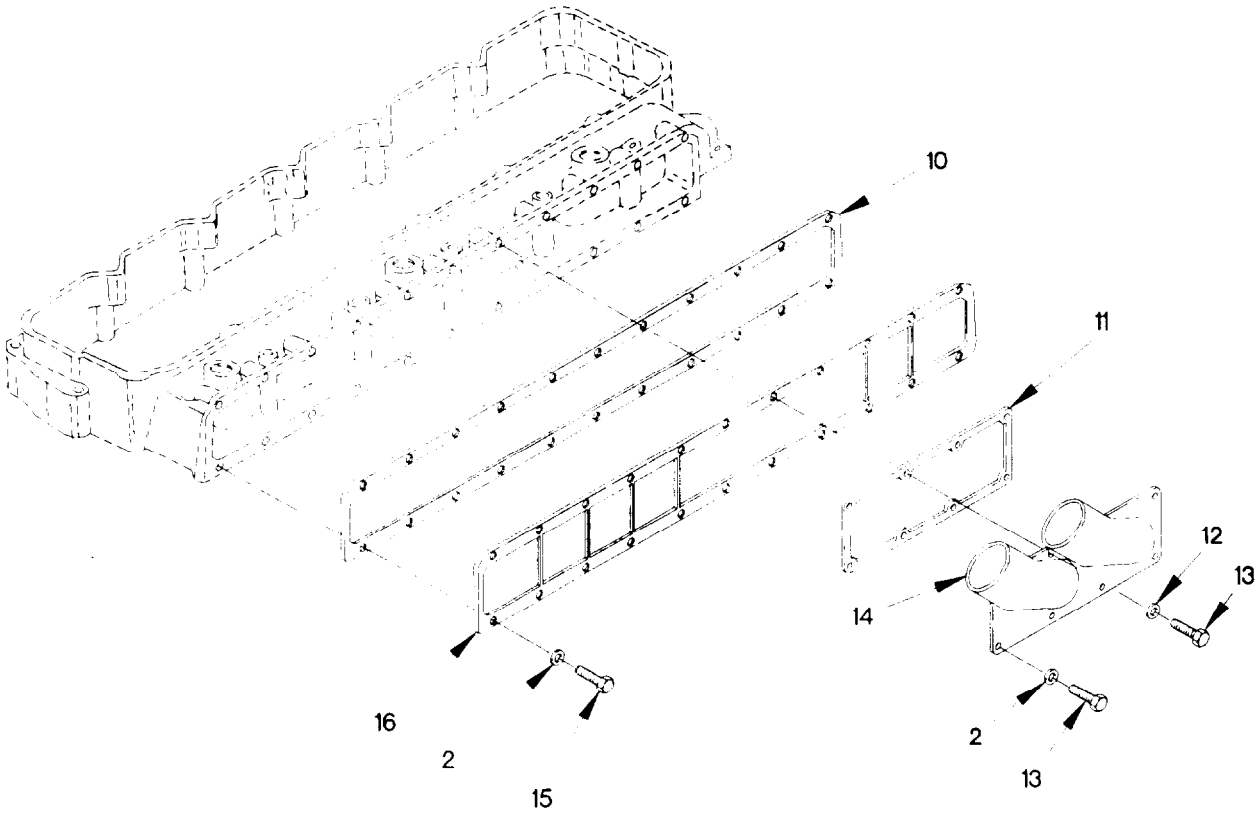

0108B-2-

Figure 23. Inlet Manifold, Gasket, and Cover (Sheet 2 of 2)

(1) ITEM NO	(2) SMR CODE	(3) FSCM	(4) PART NUMBER	(5) DESCRIPTION AND USABLE ON CODE (UOC)	(6) QTY
				GROUP 0108: MANIFOLDS FIG. 23 INLET MANIFOLD, GASKET AND COVER	
1	PAFZZ	11083	5P8347	SCREW, CAP, HEXAGON H M8 X 1.25 X 70	14
2	PAFZZ	11083	9M1974	WASHER, FLAT M8.8	41
3	PAFZZ	11083	7E9314	MANIFOLD, INTAKE	1
4	PAFZZ	11083	3K0360	O-RING PART OF KIT P/N 7X2521	3
5	PAFZZ	19207	11621436-3	PLUG, MACHINE THREAD	3
6	PAFZZ	11083	6V5223	SCREW, CAP, HEXAGON H M8 X 1.25 X 100	5
7	PAFZZ	11083	6V8213	SCREW, CAP, SOCKET HE M8 X 1.25 X 70	1
8	PAFZZ	11083	6V5218	SCREW, CAP, HEXAGON H M8 X 1.25 X 35	1
9	PAFZZ	11083	113-6250	GASKET	1
10	PAFZZ	11083	4P1624	GASKET	1
11	PAFZZ	11083	4P1623	GASKET	1
12	PAFZZ	11083	8M9024	WASHER, FLAT 13/32	2
13	PAFZZ	11083	8T0100	SCREW, CAP, HEXAGON H	8
14	PAFZZ	11083	4P2901	ELBOW, PIPE	1
15	PAFZZ	11083	8T0276	SCREW, CAP, HEXAGON H M8 X 1.25 X 45	14
16	PAFZZ	11083	4P1847	COVER, INTAKE MANIFO	1
				END OF FIGURE	

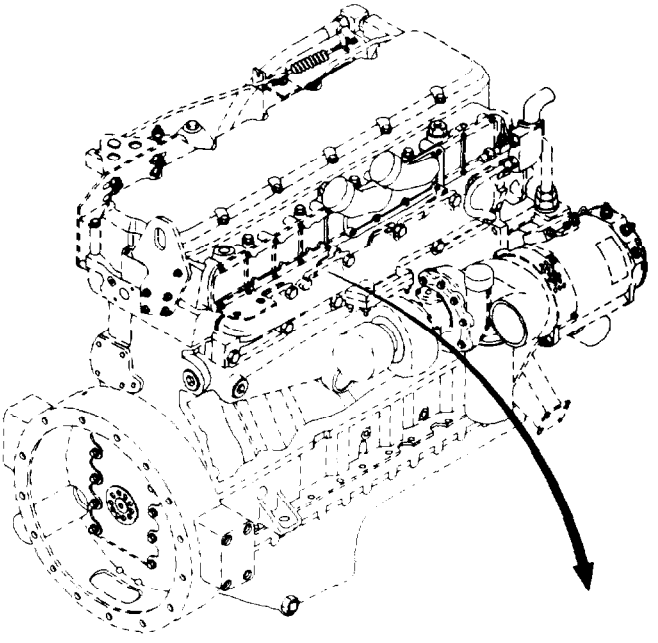

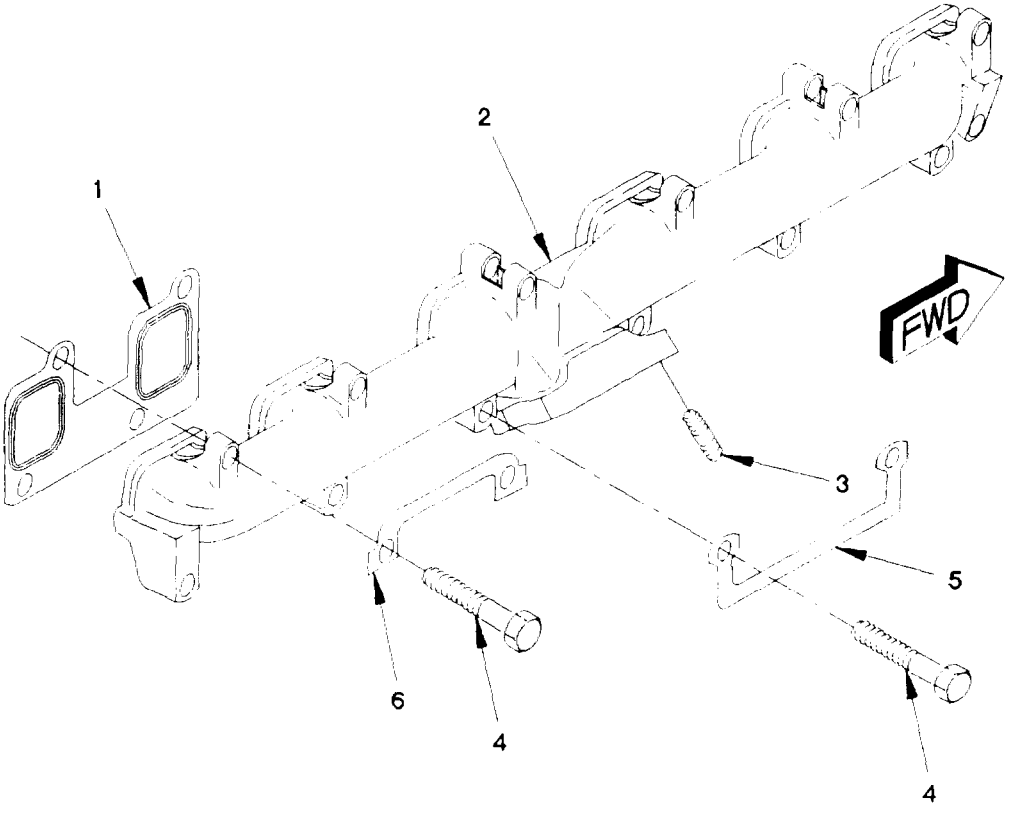

0108A-2-

Figure 24. Exhaust Manifold

(1) ITEM NO	(2) SMR CODE	(3) FSCM	(4) PART NUMBER	(5) DESCRIPTION AND USABLE ON CODE (UOC)	(6) QTY
				GROUP 0108: MANIFOLDS FIG. 24 EXHAUST MANIFOLD	
1	PAFZZ	11083	1136200	GASKET	3
2	PAFZZ	11083	100-6599	MANIFOLD, EXHAUST	1
3	PAFZZ	11083	8T7044	STUD, PLAIN	4
4	PAFZZ	11083	8T5035	SCREW, CAP, HEXAGON H M10 X 1.5 X 65	12
5	PAFZZ	11083	6I3033	RING, RETAINING PART OF KIT P/N 4R9803	1
6	PAFZZ	11083	6I3035	RING, RETAINING PART OF KIT P/N 4R9803, 9X8318	5
				END OF FIGURE	

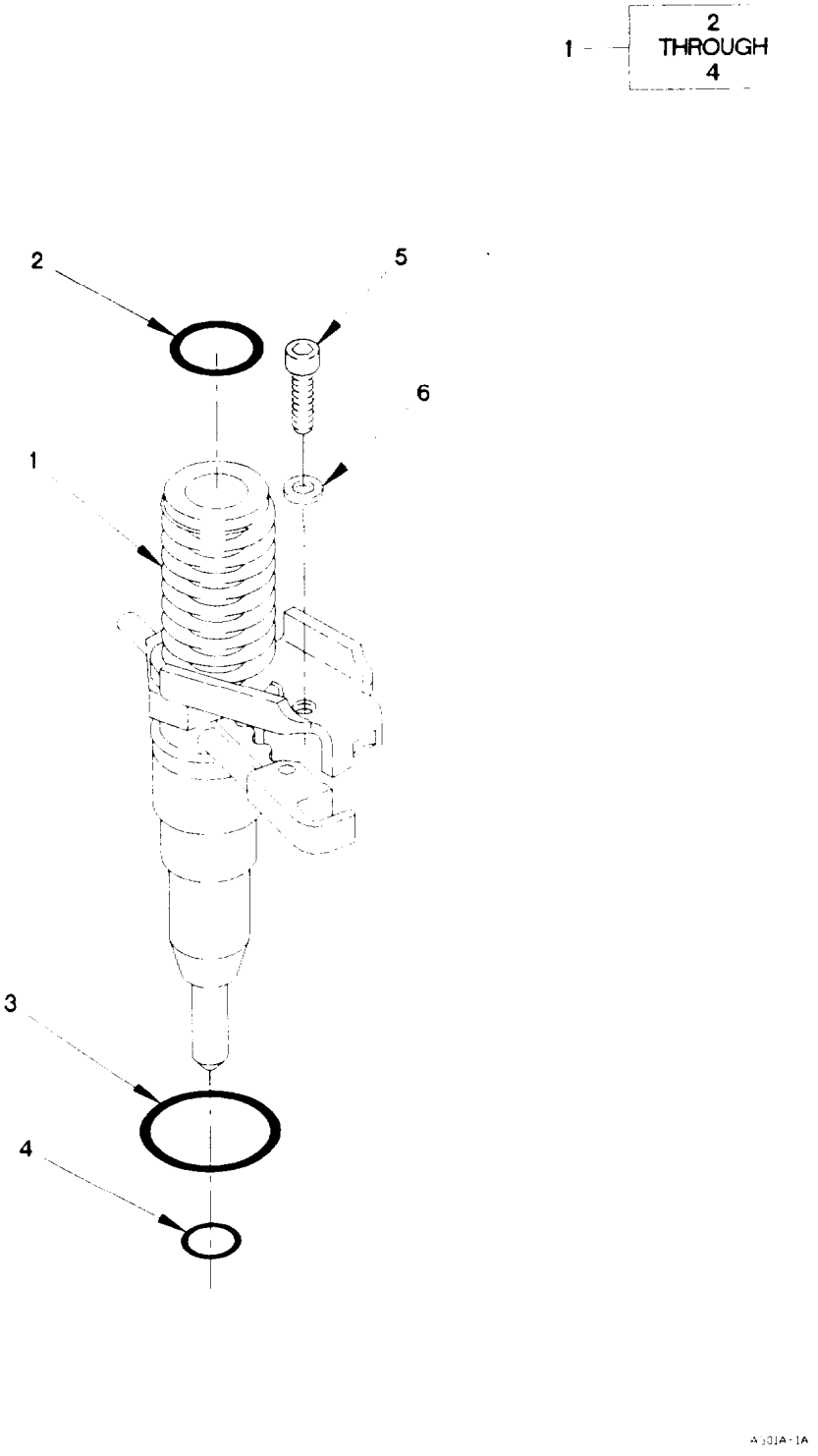

Figure 25. Fuel Injector

(1) ITEM NO	(2) SMR CODE	(3) FSCM	(4) PART NUMBER	(5) DESCRIPTION AND USABLE ON CODE (UOC)	(6) QTY
				GROUP 0301: CARBURETOR, FUEL INJECTOR	
				FIG. 25 FUEL INJECTOR	
1	PAFZZ	11083	4P2995	INJECTOR ASSEMBLY, F	6
2	PAFZZ	11083	1P8116	.O-RING	1
3	PAFZZ	11083	114-8718	.PACKING, PREFORMED	1
4	PAFZZ	11083	125-8274	.O-RING	1
5	PAFZZ	11083	8T8442	SCREW, CAP, SOCKET HE M6 X 1 X 30	6
6	PAFZZ	11083	9X8267	WASHER, FLAT	6
				END OF FIGURE	

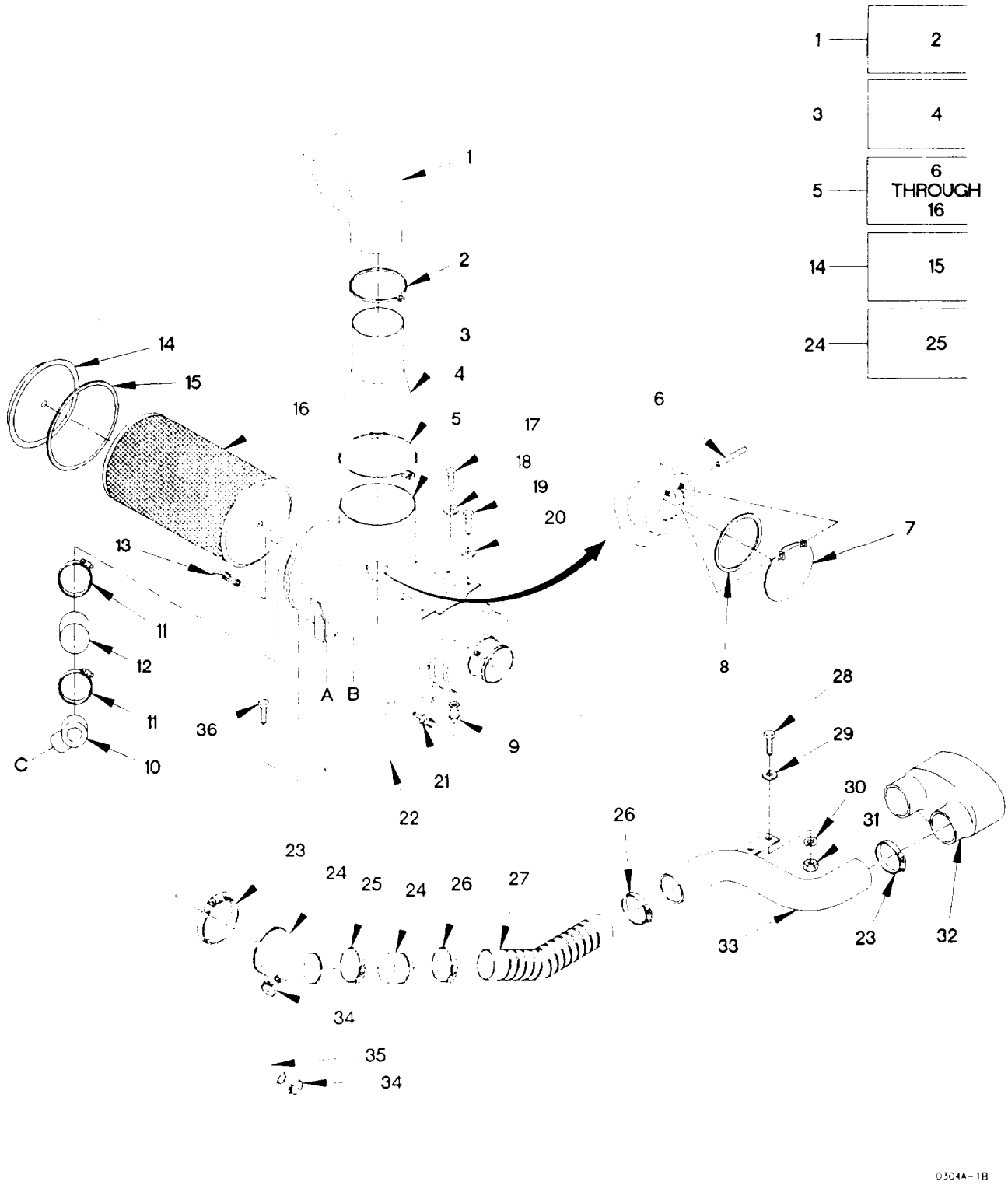

Figure 26. Air Cleaner (Sheet 1 of 3)

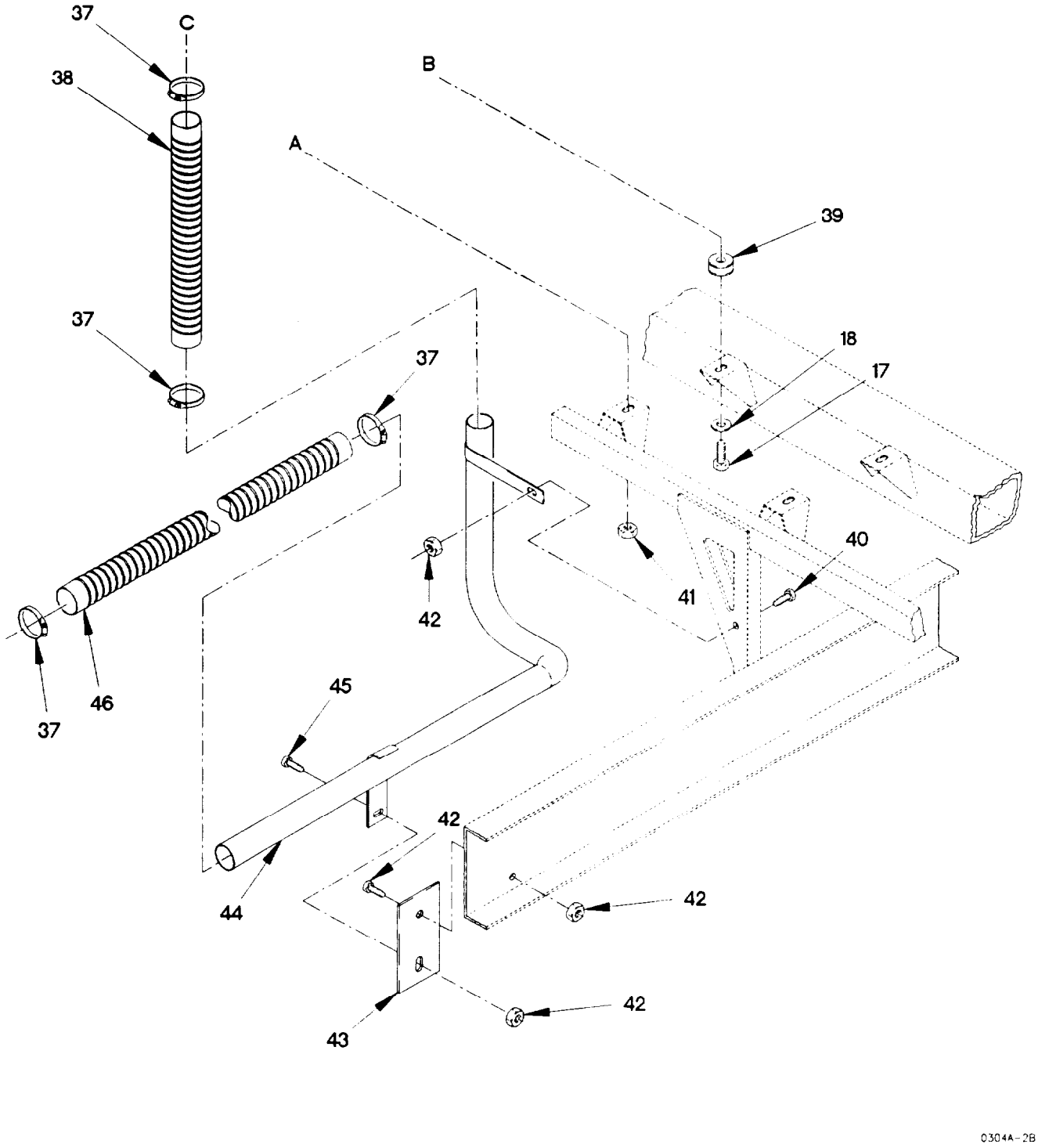

Figure 26. Air Cleaner (Sheet 2 of 3)

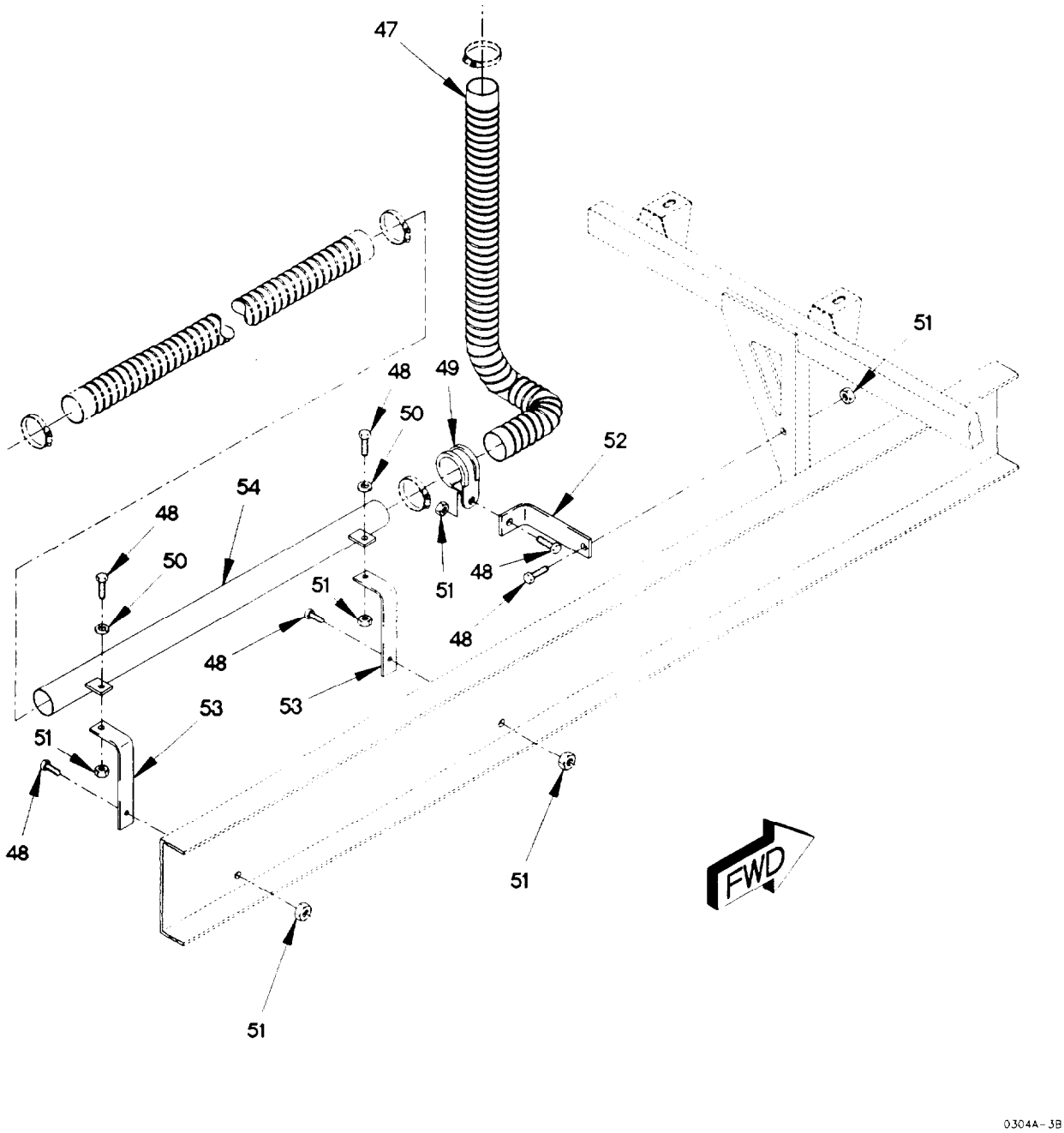

Figure 26. Air Cleaner (Sheet 3 of 3)

(1) ITEM NO	(2) SMR CODE	(3) FSCM	(4) PART NUMBER	(5) DESCRIPTION AND USABLE ON CODE (UOC)	(6) QTY
				GROUP 0304: AIR CLEANER	
				FIG. 26 AIR CLEANER	
1	PAOZZ	18265	GSH001725	AIR CLEANER, INTAKE	1
2	PAOZZ	18265	P128160	.CLAMP, HOSE 7 5/8 IN	1
3	PAOZZ	19207	12421380	ADAPTER, INTAKE MANI	1
4	PAOZZ	0FW39	12421379-001 SB	.CLAMP, UTILITY BAND	1
5	PAOOO	18265	STB14202REV14	AIR CLEANER, INTAKE	1
6	PAOZZ	18265	P10-9281	.PIN, STRAIGHT, HEADLE	1
7	PAOZZ	18265	P10-9270	.CAP ASSEMBLY, PROTEC	1
8	PAOZZ	18265	P11-3550	.SEAL, NONMETALLIC RO	1
9	PAOZZ	81343	2-2 140138C	.COUPLING, PIPE	1
10	PAOZZ	18265	P530245	.CAP ASSEMBLY, AIR CL	1
11	PAOZZ	18265	P530946	.CLAMP, INSTRUMENT MO	2
12	PAOZZ	18265	P52-7751	.MOUNT, RESILIENT	1
13	XDOZZ	0FW39	P539693	LATCH	3
14	PAOZZ	18265	P530288	.COVER, ACCESS	1
15	PAOZZ	18265	P01-6972	. .PACKING, PREFORMED	1
16	PAOZZ	18265	P52-7750	.FILTER ELEMENT, INTA	1
17	PAOZZ	56161	10503777	SCREW, CAP, HEXAGON H M10 X 1.5 X 16.0	2
				UOC: LAA, LAB, LAD, LWB, LWD,	
17	PAOZZ	19207	12414419-109	SCREW, CAP, HEXAGON H M10 X 1.5 X 12	2
				UOC: LAC, LWC,	
18	PAOZZ	19207	12414473-014	WASHER, FLAT M10	2
19	PAFZZ	96906	MS51849-75	SCREW, MACHINE 10-24 X 5/8	4
				UOC: LAA, LAB, LAD, LWB, LWD,	
20	PAOZZ	19207	12417975-005	WASHER, FLAT M5.3	4
				UOC: LAA, LAB, LAD, LWB, LWD,	
21	PAOZZ	59150	1675-013	SENSOR, AIR CHARGES	1
22	PAOZZ	59150	1775-822	HOSE, NONMETALLIC	1
23	PAOZZ	75160	C16054	CLAMP, HOSE	2
24	PAOZZ	18265	P530414	AIR CLEANER, ADAPTER	1
25	PAOZZ	75160	C16054	.CLAMP, HOSE	1
26	PAOZZ	06481	T-218758	CLAMP, HOSE	2
27	PAOZZ	18265	P5539	HOSE, NONMETALLIC	1
				UOC: LAA, LAB, LAD, LWB, LWD,	
27	PAOZZ	18265	P5540	HOSE, NONMETALLIC	1
				UOC: LAC, LWC,	
28	PAOZZ	81495	071 408 32	BOLT, MACHINE M8 X 1.25 X 25	2
29	PAOZZ	34914	990 3861	WASHER, FLAT M8.4	2
30	PAOZZ	D8286	DIN128A-8FST	WASHER, LOCK M8	2
31	PAOZZ	1FH08	DIN555M8	NUT, PLAIN, HEXAGON M8 X 1.25	2
32	PAOZZ	19207	12414502	HOSE, AIR DUCT	1
33	PAOZZ	19207	12414636	TUBE, BENT, METALLIC	1
34	PAOZZ	96906	MS35842-11	CLAMP, HOSE	2
35	PAOZZ	19207	12419827	AIR CLEANER, INTAKE	1

(1) ITEM NO	(2) SMR CODE	(3) FSCM	(4) PART NUMBER	(5) DESCRIPTION AND USABLE ON CODE (UOC)	(6) QTY
36	PAOZZ	19207	12414307-063	BOLT, MACHINE M10 X 1.5 X 25	3
37	PAOZZ	01276	FF9311-36	CLAMP, HOSE	4
38	PAOZZ	18265	P535537	HOSE, NONMETALLIC UOC: LAA, LAB, LAD, LWB, LWD,	1
39	PAOZZ	81860	25922	MOUNT, RESILIENT	1
40	PAOZZ	19207	12414307-050	BOLT, MACHINE M10 X 1.25 X 30 UOC: LAA, LAB, LAD, LWB, LWD,	3
41	PAOZZ	19207	12414308-019	NUT, SELF-LOCKING, EX M10 X 1.5	3
42	PAOZZ	19207	12414308-020	NUT, SELF-LOCKING, EX M10 X 1.25 UOC: LAA, LAB, LAD, LWB, LWD,	3
42	PAOZZ	19207	12414308-020	NUT, SELF-LOCKING, EX M10 X 1.25 UOC: LAC, LWC,	1
43	PFOZZ	19207	12420422	BRACKET, MOUNTING UOC: LAA, LAB, LAD, LWB, LWD,	1
44	PAOZZ	18265	P530516	TUBE ASSEMBLY, METAL UOC: LAA, LAB, LAD, LWB, LWD,	1
45	PAOZZ	19207	12414307-049	BOLT, MACHINE M10 X 1.25 X 25 UOC: LAC, LWC,	1
46	PAOZZ	0TE27	AD1698-8-84-8	HOSE, NONMETALLIC	1
47	PAOZZ	18265	P535538	HOSE, NONMETALLIC UOC: LAC, LWC,	1
48	PAOZZ	15526	DIN933-M6X16-8.8 -A4C	SCREW, CAP, HEXAGON H M6 X 1 X 16 UOC: LAC, LWC,	5
49	PAOZZ	18076	S630H-36	CLAMP, LOOP UOC: LAC, LWC,	1
50	PAOZZ	19207	12414560-014	WASHER, SPRING TENSI M6.5 UOC: LAC, LWC,	2
51	PAOZZ	19207	12414308-002	NUT, SELF-LOCKING, EX M6 X1 UOC: LAC, LWC,	3
52	PAOZZ	19207	12421150	BRACKET, ANGLE UOC: LAC, LWC,	1
53	PAOZZ	0FW39	12420847	BRACKET, MOUNTING UOC: LAC, LWC,	2
54	PAOZZ	19207	12421153	TUBE ASSEMBLY, METAL UOC: LAC, LWC,	1

END OF FIGURE

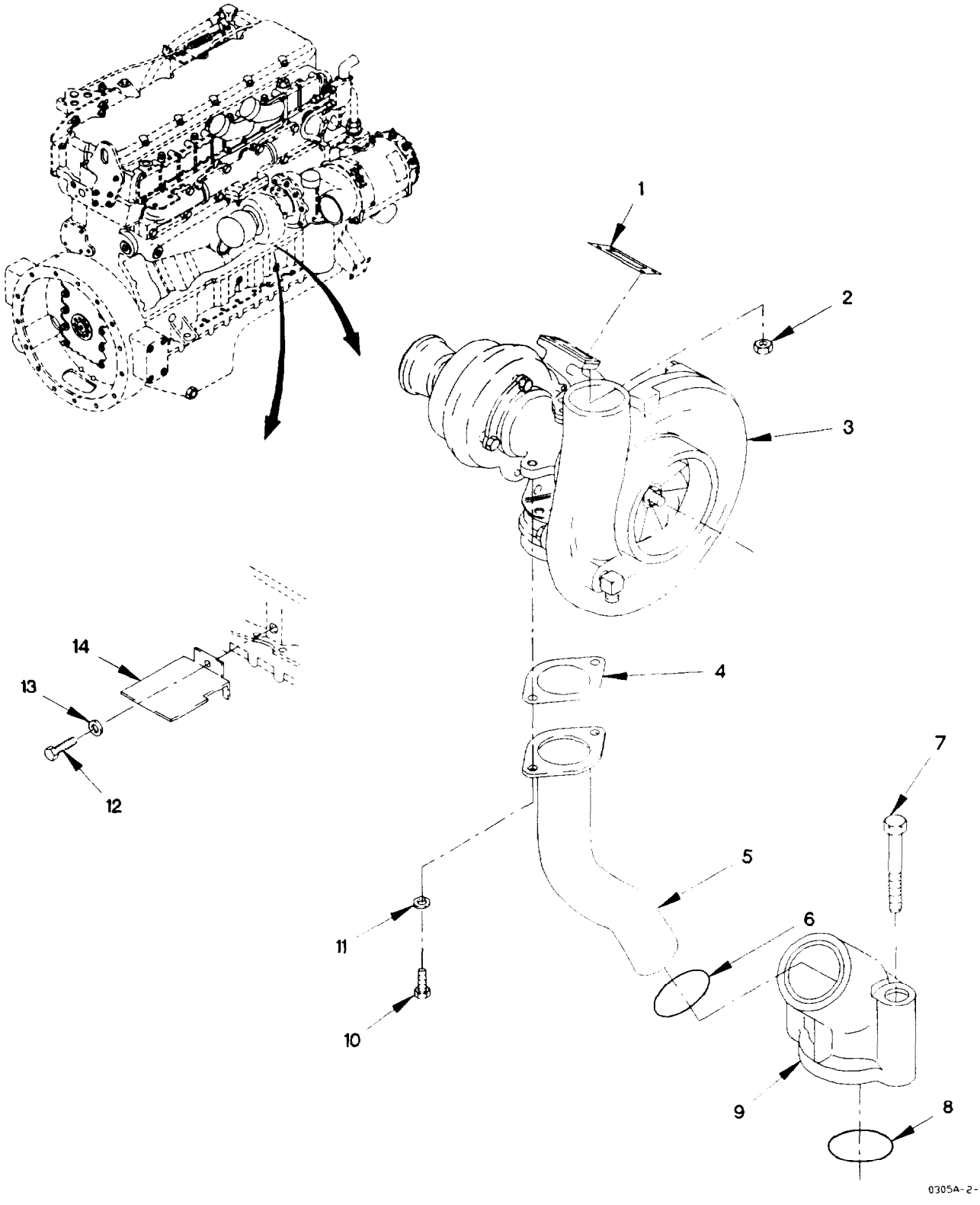

Figure 27. Turbocharger

(1) ITEM NO	(2) SMR CODE	(3) FSCM	(4) PART NUMBER	(5) DESCRIPTION AND USABLE ON CODE (UOC)	(6) QTY
				GROUP 0305: SUPERCHARGER, BLOWER, TURBOCHARGER	
				FIG. 27 TURBOCHARGER	
1	PAFZZ	11083	7C7431	GASKET PART OF KIT P/N 4R9803, 7X2526	1
2	PAFZZ	11803	9X6620	LOCKNUT, TUBE FITTIN	4
3	PAFZZ	11803	4R9147	TURBOSUPERCHARGER, E	1
4	PAOZZ	11803	7W2398	GASKET PART OF KIT P/N 4R9803, 7X2526, 9X8318	1
5	PAFZZ	11803	7C3760	TUBE ASSEMBLY, METAL	1
6	PAFZZ	11803	9M4849	SEAL, RING PART OF KIT P/N 7X2526	1
7	PAFZZ	11803	8T0100	SCREW, CAP, HEXAGON H	2
8	PAFZZ	11803	4F7391	O-RING PART OF KIT P/N 7X2521, 7X2526	1
9	PAFZZ	11803	4P4014	FITTING	1
10	PAFZZ	11803	6V3940	SCREW, CAP, HEXAGON H M8 X 1.25 X 25	2
11	PAFZZ	11803	9M1974	WASHER, FLAT M8.8	2
12	PAFZZ	11803	8T4200	SCREW, CAP, HEXAGON H M8 X 1.25 X 16	1
13	PAFZZ	11803	8T4224	WASHER, FLAT	1
14	PAFZZ	11803	4P2949	SHIELD, HEAT, TURBINE	1
				END OF FIGURE	

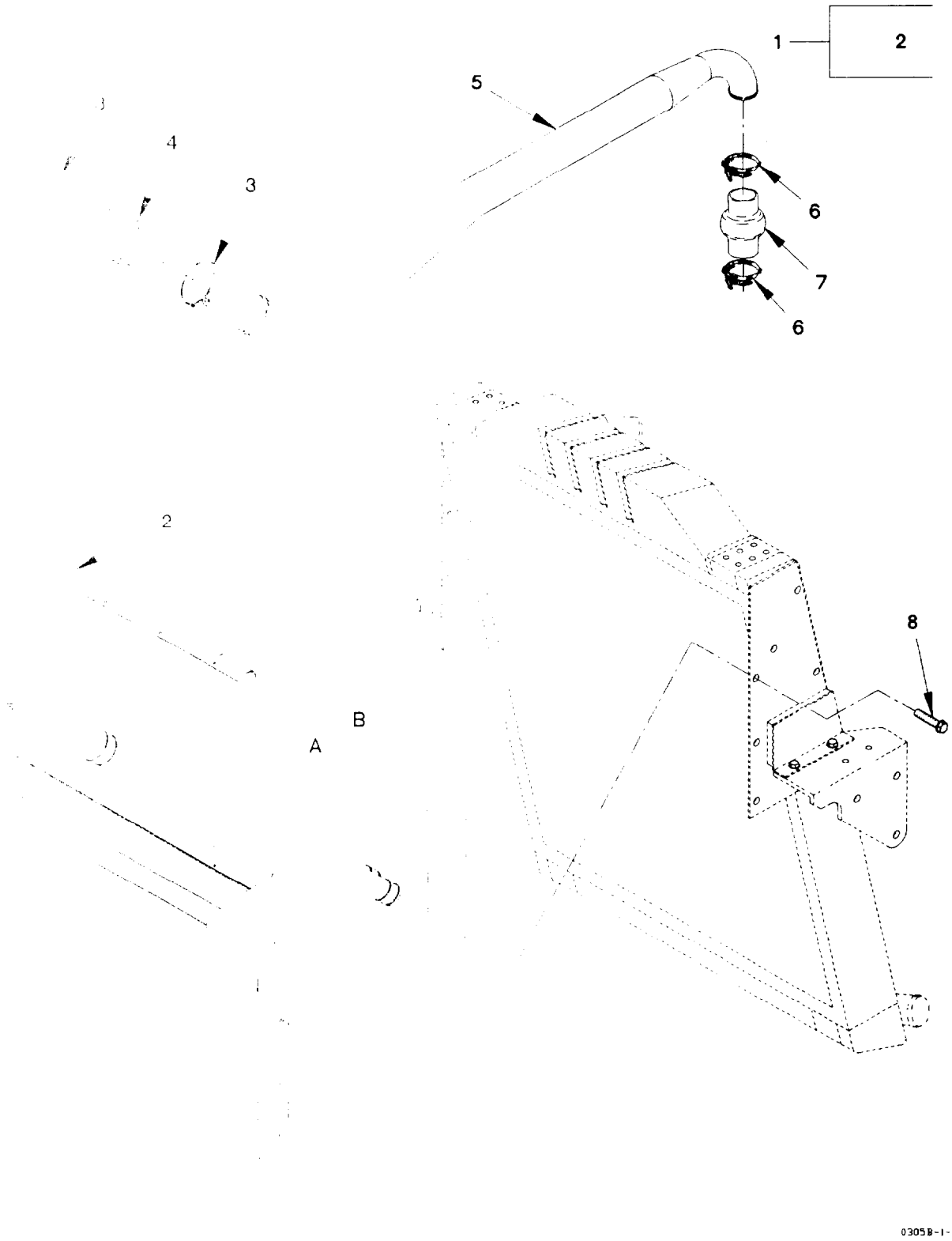

Figure 28. Charge Air Cooler, Pipes, Brackets, and Hoses
(Sheet 1 of 2)

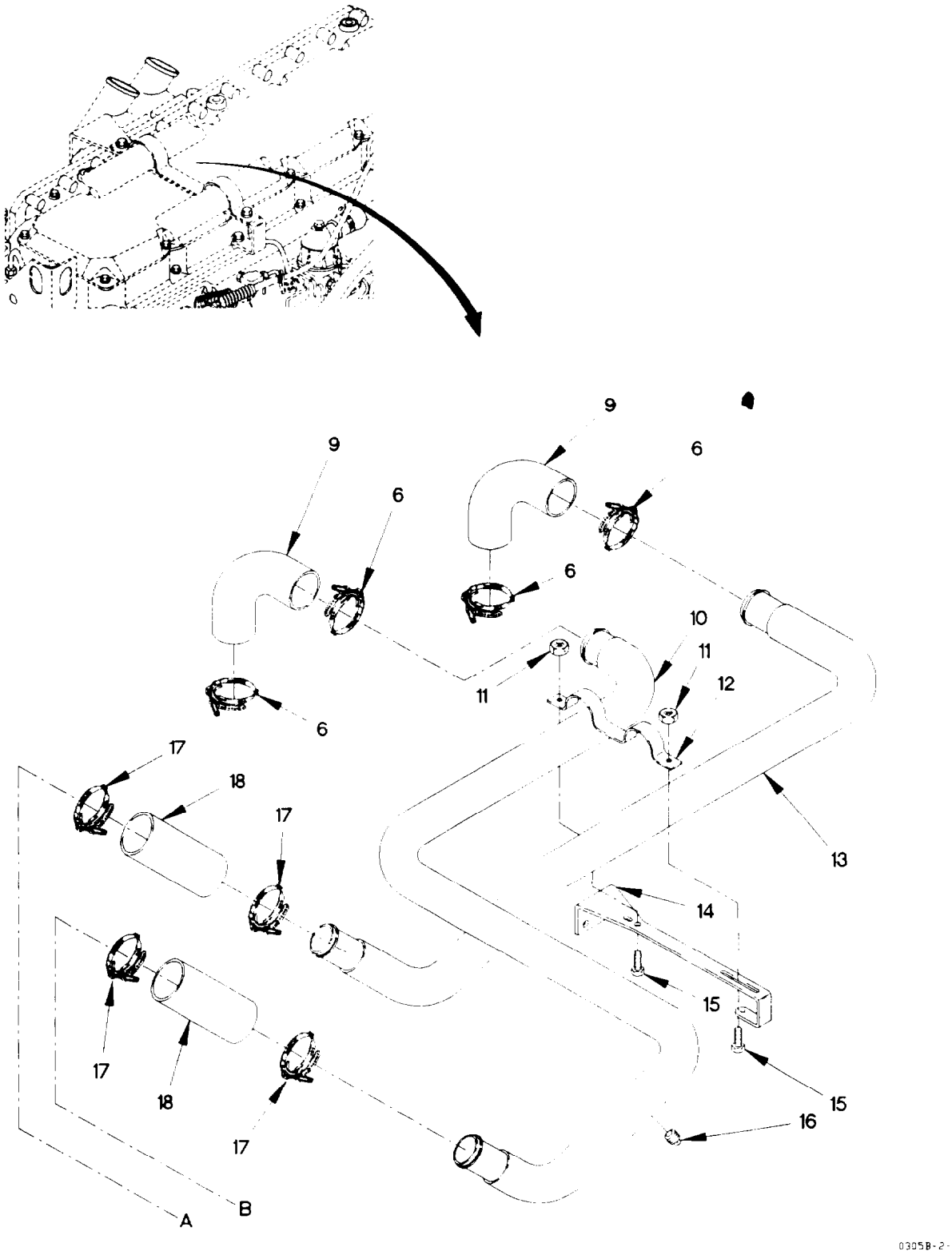

Figure 28. Charge Air Cooler, Pipes, Brackets, and Hoses
(Sheet 2 of 2)

(1) ITEM NO	(2) SMR CODE	(3) FSCM	(4) PART NUMBER	(5) DESCRIPTION AND USABLE ON CODE (UOC)	(6) QTY
				GROUP 0305: SUPERCHARGER, BLOWER, TURBOCHARGER	
				FIG. 28 CHARGE AIR COOLER, PIPES, BRACKETS AND HOSES	
1	PAOZZ	0CVH3	485630-0001	RADIATOR, ENGINE COO	1
2	PFOZZ	19207	12420535	.BAFFLE, AIRFLOW, NONA	1
3	PAOZZ	7Z588	CT 350L	CLAMP, HOSE	2
4	PAOZZ	49058	12414686	HOSE, AIR DUCT	1
5	PAOZZ	19207	12421784	PIPE, BENT, METALLIC	1
6	PAOZZ	7Z588	CT 250L	CLAMP, HOSE	6
7	PAOZZ	16632	STE1002	HOSE, PREFORMED	1
8	PAOZZ	19207	12414307-037	BOLT, MACHINE M8 X 1.25 X 25	6
9	PAOZZ	0FW39	12414424	HOSE, PREFORMED	2
10	PAOZZ	0FW39	12421188-001	AIR LINE, UPPER ENGI CHARGE AIR SYSTEM	1
11	PAOZZ	19207	12414308-017	NUT, SELF-LOCKING, EX M8 X 1	2
12	PAOZZ	19207	12421179-001	BRACKET, MOUNTING	1
13	PAOZZ	19207	12378369-003	TUBE, BENT, METALLIC	1
14	PAOZZ	19207	12421172-001	BRACKET, MULTIPLE AN	1
15	PAOZZ	19207	12414307-023	BOLT, MACHINE M8 X 1 X 20	2
16	PAOZZ	24617	444626	PLUG, PIPE	1
17	PAOZZ	7Z588	CT-300L	CLAMP, HOSE	4
18	PAOZZ	19207	12417310-002	HOSE, NONMETALLIC	2

END OF FIGURE

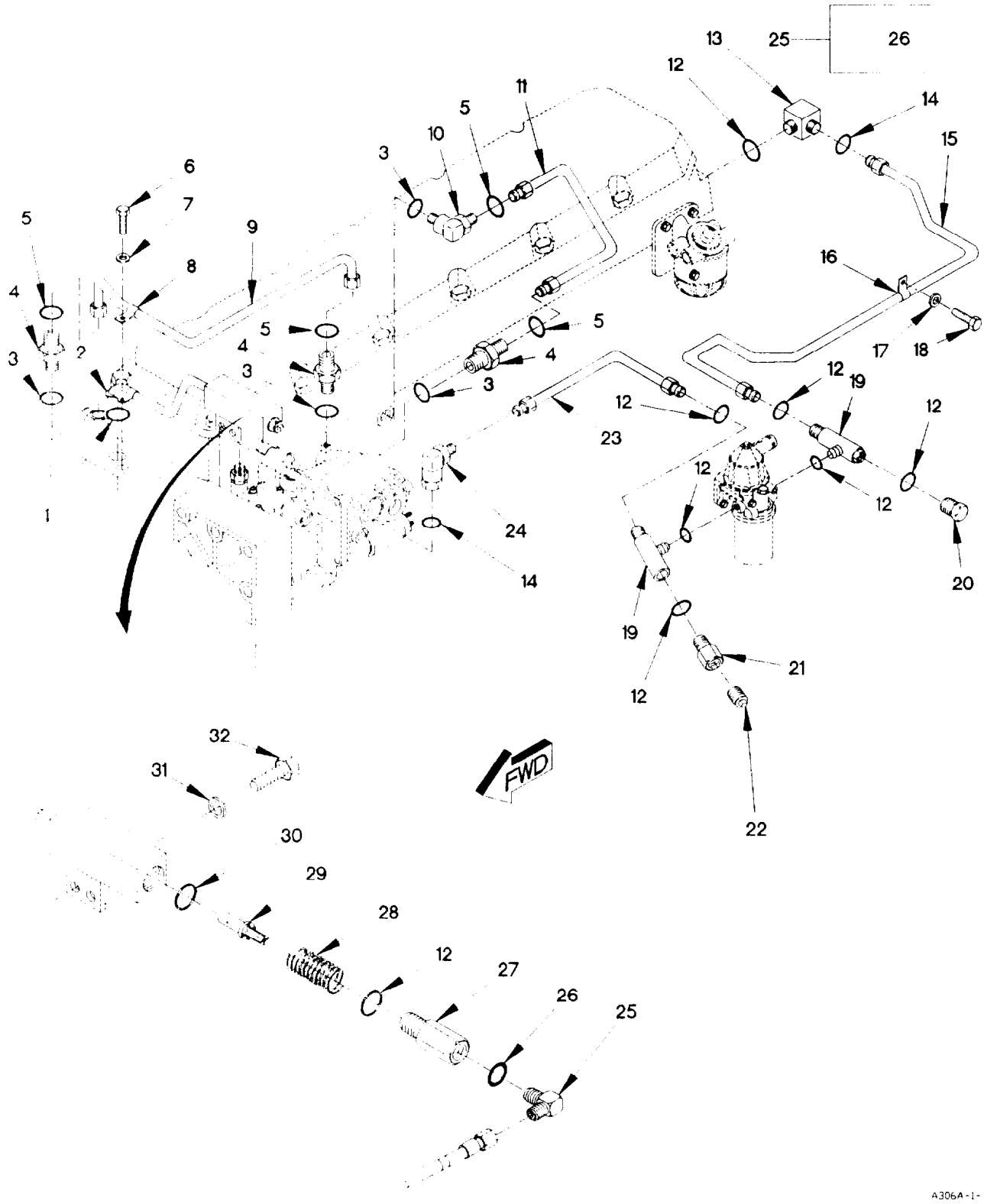

Figure 29. Fuel Regulating Valve, Tubes, Fittings, and Hoses
(Sheet 1 of 2)

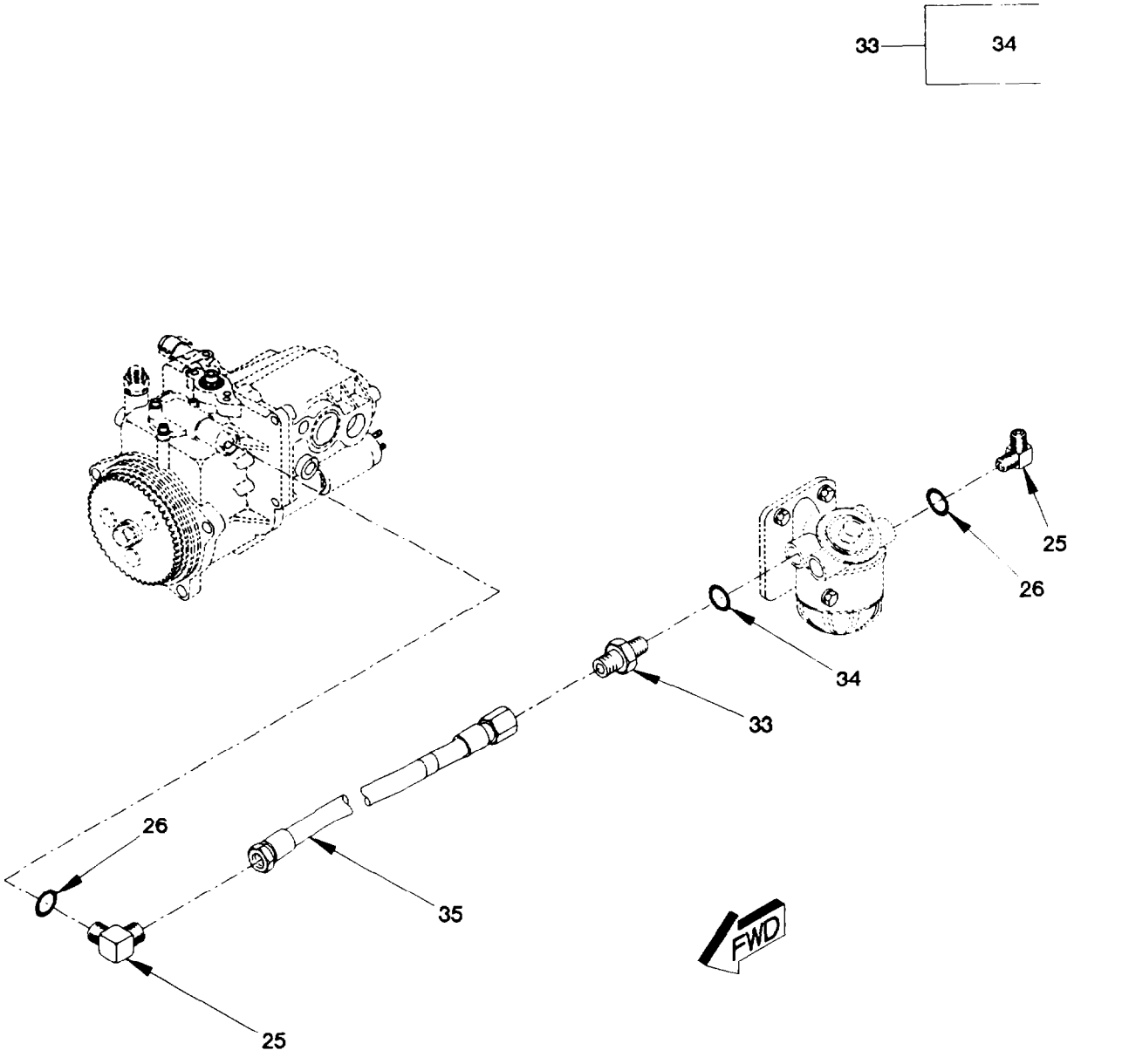

Figure 29. Fuel Regulating Valve, Tubes, Fittings, and Hoses
(Sheet 2 of 2)

(1) ITEM NO	(2) SMR CODE	(3) FSCM	(4) PART NUMBER	(5) DESCRIPTION AND USABLE ON CODE (UOC)	(6) QTY
				GROUP 0306: TANKS, LINES, FITTINGS, HEADERS	
				FIG. 29 FUEL REGULATING VALVE, TUBES, FITTINGS, AND HOSES	
1	PAOZZ	11083	5F7054	O-RING PART OF KIT P/N 9X8318	1
2	PAOZZ	11083	7E5190	HOSE ASSEMBLY, METAL	1
3	PAOZZ	11083	3J7354	O-RING	4
4	PAOZZ	11083	6V8647	ADAPTER, STRAIGHT, TU	3
5	PAOZZ	11083	4J5477	O-RING	4
6	PAHZZ	11083	8T7547	SCREW, CAP, HEXAGON H M8 X 1.25 X 30	1
7	PAOZZ	11083	9M1974	WASHER, FLAT M8.8	1
8	PAOZZ	11083	8M2772	CLAMP, LOOP 3/8	1
9	PAOZZ	11083	1077749	TUBE ASSEMBLY, METAL	1
10	PAOZZ	11083	6V8628	ELBOW, TUBE TO BOSS	1
11	PAOZZ	11083	7W0367	TUBE ASSEMBLY, METAL	1
12	PAOZZ	11083	3J1907	O-RING PART OF KIT P/N 9X8318	8
13	PAOZZ	11083	6V8724	ELBOW, PIPE	1
14	PAOZZ	11976	A82777	O-RING PART OF KIT P/N 7X2524	2
15	PAOZZ	11083	7W0183	TUBE ASSEMBLY, METAL	1
16	PAOZZ	11083	9S1350	CLAMP, LOOP	1
17	PAOZZ	11083	8T4224	WASHER, FLAT	1
18	PAOZZ	11083	8T4200	SCREW, CAP, HEXAGON H M8 X 1.25 X 16	1
19	PAOZZ	11083	7X2459	TEE, BOSS	2
20	PAOZZ	11083	9S4191	PLUG, MACHINE THREAD	1
21	PAOZZ	0TE27	6405-6-4	ADAPTER, STRAIGHT, PI	1
22	PAOZZ	81343	4 130109AC	PLUG, PIPE	1
23	PAOZZ	11083	1154232	TUBE ASSEMBLY, METAL	1
24	PAOZZ	11083	6V9850	ELBOW, TUBE	1
25	PAOZZ	96906	MS51527A6	ELBOW, TUBE TO BOSS	3
26	PAOZZ	02697	3-906N552-90	.O-RING	4
27	PAOZZ	11083	8T0151	VALVE, REGULATING, FL	1
28	PAOZZ	11083	3N3252	SPRING, HELICAL, COMP	1
29	PAOZZ	11083	7E5189	VALVE, REGULATING, FL	1
30	PAOZZ	11083	5P7813	O-RING PART OF KIT P/N 9X8318	1
31	PAOZZ	11083	8M9024	WASHER, FLAT 13/32	2
32	PAOZZ	11083	6V6317	SCREW, CAP, HEXAGON H M10 X 1.5 X 20	2
33	PAOZZ	81343	6-6 070120C	ADAPTER, STRAIGHT, TU	1
34	PAOZZ	96906	MS28778-6	.O-RING	1
35	PAOZZ	01276	2556-06-0272	HOSE ASSEMBLY, NONME	1
				END OF FIGURE	

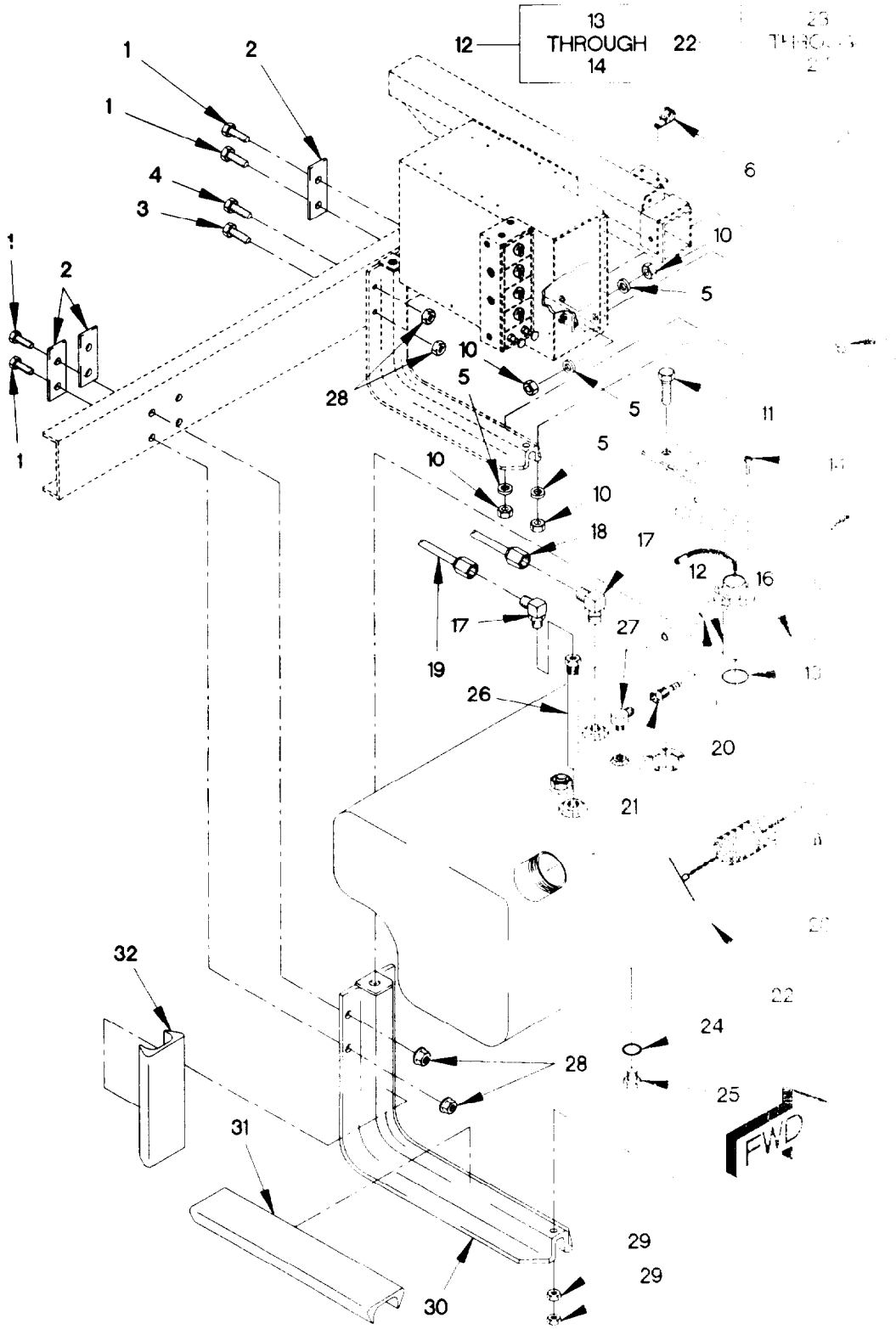

Figure 30. Fuel Tank, Clamps, and Brackets

(1) ITEM NO	(2) SMR CODE	(3) FSCM	(4) PART NUMBER	(5) DESCRIPTION AND USABLE ON CODE (UOC)		(6) QTY
				GROUP 0306: TANKS, LINES, FITTINGS, HEADERS		
				FIG. 30 FUEL TANK, CLAMPS AND BRACKETS		
1	PAOZZ	19207	12414307-138	BOLT, MACHINE M16 X 1.5 X 35		6
2	PAOZZ	19207	12417640	PLATE, MENDING		3
3	PAOZZ	19207	12414307-143	BOLT, MACHINE M16 X 1.5 X 60		1
4	PAOZZ	19207	12414307-150	BOLT, MACHINE M16 X 1.5 X 120		1
5	PAOZZ	64678	007349010003	WASHER, FLAT M10		4
6	PAOZZ	01276	900729-001	CLAMP, LOOP		1
7	PAOZZ	19207	12417346	COVER, ACCESS		1
8	PAOZZ	96906	MS21266-2N	GROMMET, NONMETALLIC		1
9	PAOZZ	05824	M10X1.5X30 DIN 93 3 ST	SCREW, CAP, HEXAGON H M10 X 1.5 X 30		4
10	PAOZZ	19207	12414308-019	NUT, SELF-LOCKING, EX M10 X 1.5		4
11	PAOZZ	19207	12414307-092	BOLT, MACHINE M12 X 1.75 X 30		2
12	PAOZZ	0B8Y6	9604925-005	SWITCH, LIQUID LEVEL		1
13	PAOZZ	0B8Y6	9604792-001	.GASKET		1
14	PAOZZ	96906	MS35215-60	.SCREW, MACHINE 10-32 X 1.00		5
15	PAOZZ	0FW39	12378865-001	BAND, RETAINING		2
16	PAOZZ	98624	A1393M	STRAP, RETAINING 35 INCHES		2
17	PAOZZ	81343	6-6 070202BA	ELBOW, PIPE TO TUBE		2
18	PAOZZ	19207	12418124-002	HOSE ASSEMBLY, NONME		1
19	PAOZZ	19207	12418124-001	HOSE ASSEMBLY, NONME		1
20	MOOZZ	81349	M13444T1.250	HOSE ASSEMBLY MAKE FROM HOSE P/N: 483666 (49185) X 58 IN	V	
21	PAOZZ	0TE27	7207-86552	ADAPTER, STRAIGHT, TU		1
22	PAOZZ	98624	SS5219	TANK, FUEL, ENGINE		1
23	PAOZZ	98624	0S5763	.CAP, PROTECTIVE, DUST CAP/STRAINER KIT		1
24	PAOZZ	96906	MS28778-9	.O-RING		1
25	PAOZZ	79470	3152X8	.PLUG, PIPE		1
26	PAOZZ	98624	266AH	.TUBE, METALLIC		1
27	PAOZZ	51377	A1386H	.VALVE, VENT		1
28	PAOZZ	19207	1241408-025	NUT, SELF-LOCKING, EX M16 X 1.5		8
29	PAOZZ	96906	MS35691-33	NUT, PLAIN, HEXAGON 1/2-13		4
30	PAOZZ	98624	SS5756	BRACKET, VEHICULAR C		2
31	MOOZZ	19207	12414669-002X416	INSULATOR, PLATE MAKE FROM INSULATOR P/N: 12414669-002 (0VXY8) X 416 MM LONG		2
32	MOOZZ	0FW39	12414669-001X235	INSULATOR, PLATE MAKE FROM INSULATOR P/N: 12414669-002 (0VXY8) X 235MM		2

END OF FIGURE

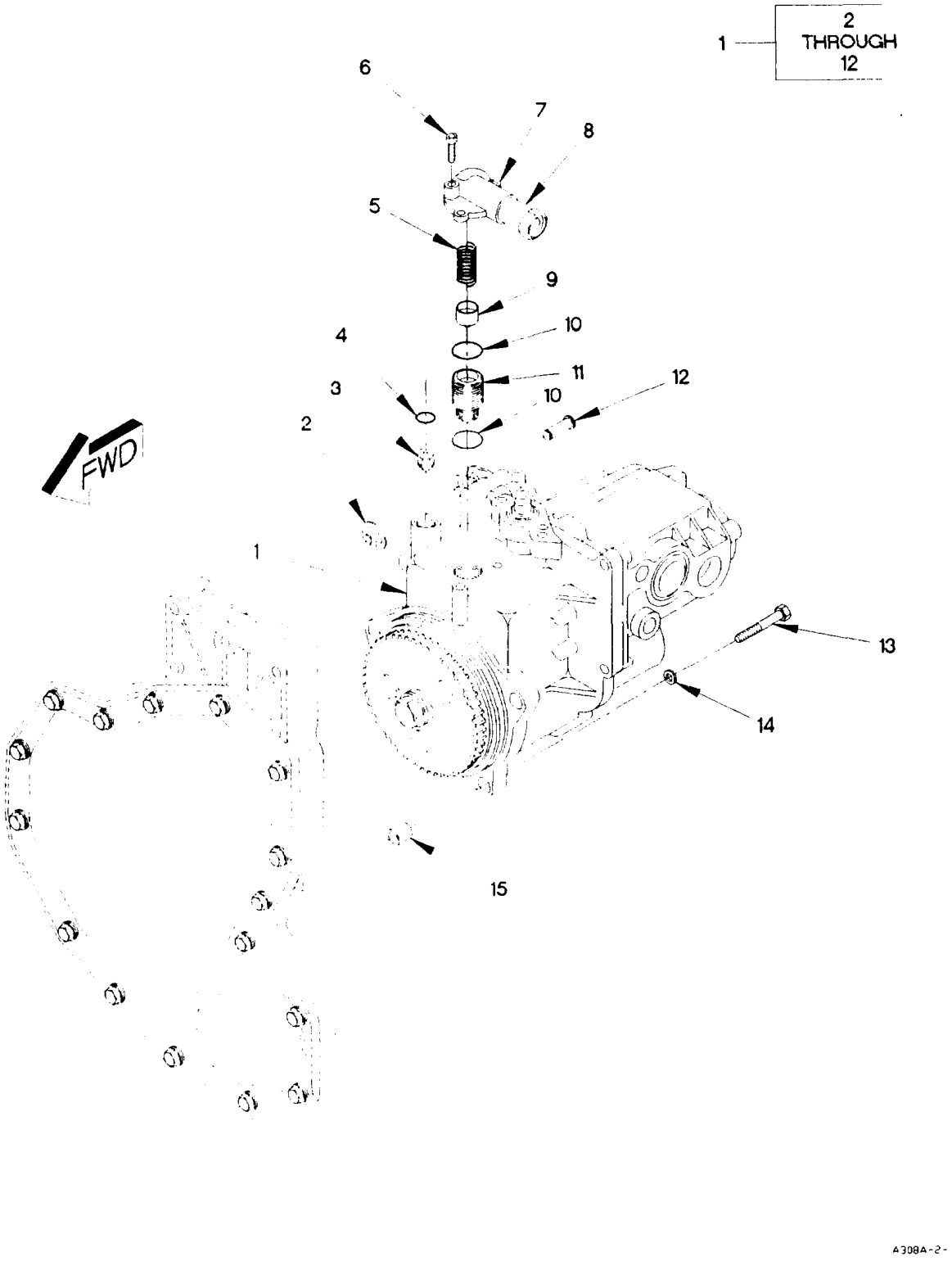

Figure 31. Governor and Fuel Transfer (Sheet 1 of 2)

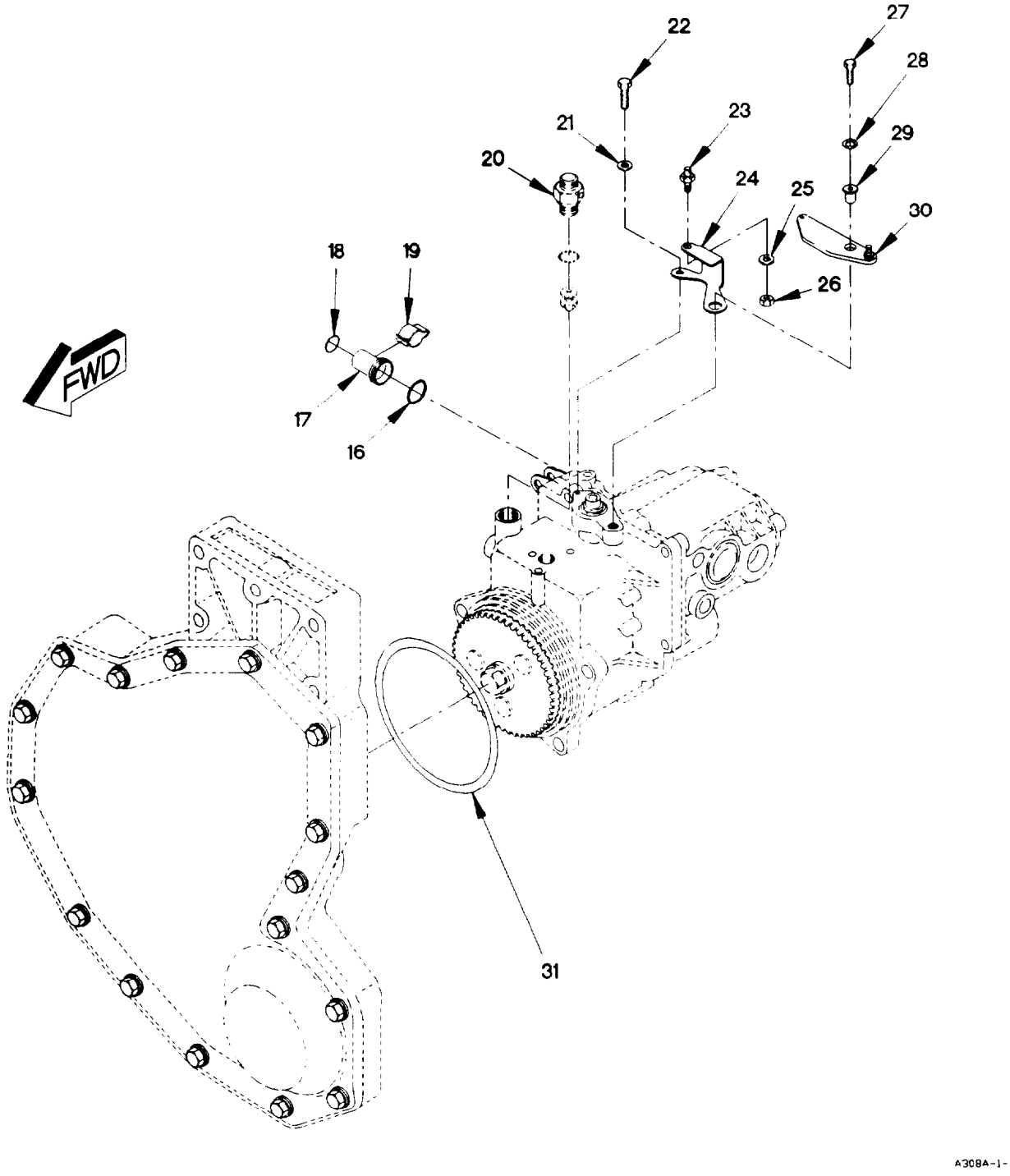

Figure 31. Governor and Fuel Transfer (Sheet 2 of 2)

(1) ITEM NO	(2) SMR CODE	(3) FSCM	(4) PART NUMBER	(5) DESCRIPTION AND USABLE ON CODE (UOC)	(6) QTY
				GROUP 0308: ENGINE SPEED GOVERNOR AND CONTROLS	
				FIG. 31 GOVERNOR AND FUEL TRANSFER	
1	PAFHH	11083	4R9036	GOVERNOR, DIESEL ENG	1
2	PAFZZ	96906	MS16633-1031	.RING, RETAINING	1
3	PAFZZ	11083	7W7383	.VALVE ASSY, CHECK PART OF KIT P/N 5R9065	1
4	PAFZZ	11083	3J1907	.O-RING PART OF KIT P/N 5R9065	1
5	KFHZZ	11083	7C5294	.SPRING PART OF KIT P/N 5R9065	1
6	PAHZZ	11083	8C6364	.BOLT, MACHINE M5 X 0.8 X 25	3
7	PAHZZ	11083	4P4224	.COVER, ACCESS	1
8	PAHZZ	11083	7E0156	.FITTING, LEVER	1
9	KFHZZ	11083	7W5616	.SLEEVE ASSY PART OF KIT P/N 5R9065	1
10	PAHZZ	58312	4D9986-00	.SEAL PART OF KIT P/N 5R9065	2
11	KFHZZ	11083	4P3953	.PISTON ASSY PART OF KIT P/N 5R9065	1
12	PAFZZ	11083	7C8854	.AXLE, STRAIGHT	1
13	PAFZZ	11083	6V5218	SCREW, CAP, HEXAGON H M8 X 1.25 X 35	3
14	PAFZZ	11083	9M1974	WASHER, FLAT M8.8	3
15	PAFZZ	11083	7W3872	SHIELD, EXPANSION	1
16	PAFZZ	11083	6F6673	O-RING PART OF KIT P/N 9X8318	1
17	PAFZZ	11083	9Y5295	ADAPTER, STRAIGHT, TU	1
18	PAFZZ	11083	1T1068	O-RING PART OF KIT P/N 5R9051	1
19	PAFZZ	11083	7C3839	CLIP, SPRING TENSION	1
20	PFFZZ	11083	7E9898	ADAPTER, STRAIGHT, TU	1
21	PAOZZ	96906	MS25440-4	WASHER, FLAT 9/32	1
22	PAOZZ	11083	5C9553	BOLT, MACHINE M6 X 1 X 16	1
23	PAOZZ	11083	7E8445	PIN, SHOULDER, HEADLE	1
24	PAOZZ	11083	4P7596	LEVER, REMOTE CONTRO	1
25	PAOZZ	11083	9X8256	WASHER, FLAT	1
26	PAOZZ	11083	6V8187	NUT, PLAIN, HEXAGON	1
27	PAOZZ	11083	7X2537	BOLT, SHOULDER	1
28	PAOZZ	11083	7X0579	WASHER, FLAT	1
29	PAOZZ	11083	4P2987	SPACER, RING	1
30	PAOZZ	11083	1158543	LEVER, REMOTE CONTRO	1
31	PAFZZ	11083	7E0844	GASKET PART OF KIT P/N 9X9318	1
				END OF FIGURE	

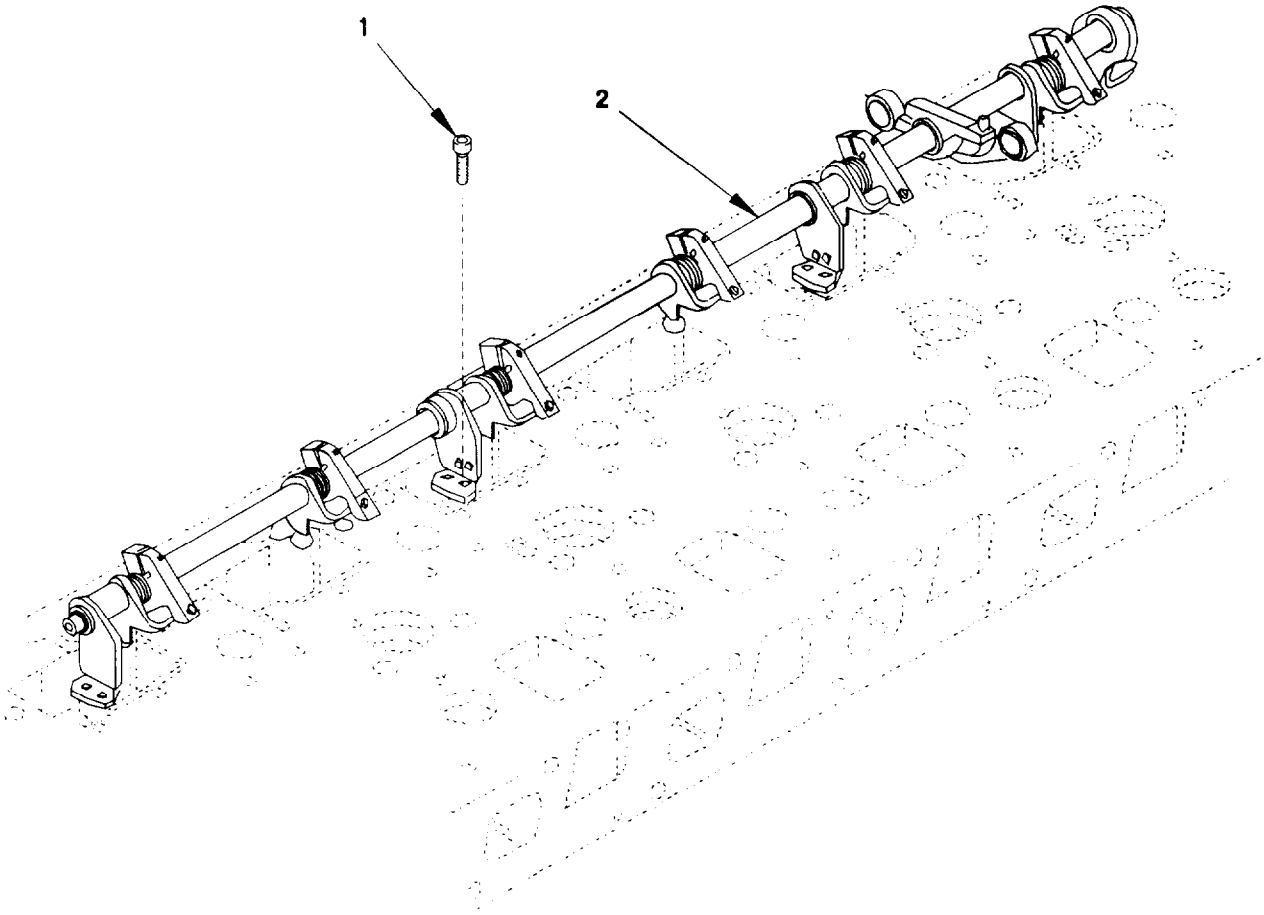

03088-1-

Figure 32. Fuel Control Linkage

(1) ITEM NO	(2) SMR CODE	(3) FSCM	(4) PART NUMBER	(5) DESCRIPTION AND USABLE ON CODE (UOC)	(6) QTY
				GROUP 0308: ENGINE SPEED GOVERNOR AND CONTROLS	
				FIG. 32 FUEL CONTROL LINKAGE	
1	PAFZZ	11083	6V5683	SCREW, CAP, SOCKET HE M6 X 1 X 16	4
2	PAFZZ	11083	102-7459	CONTROL ROD	1
				END OF FIGURE	

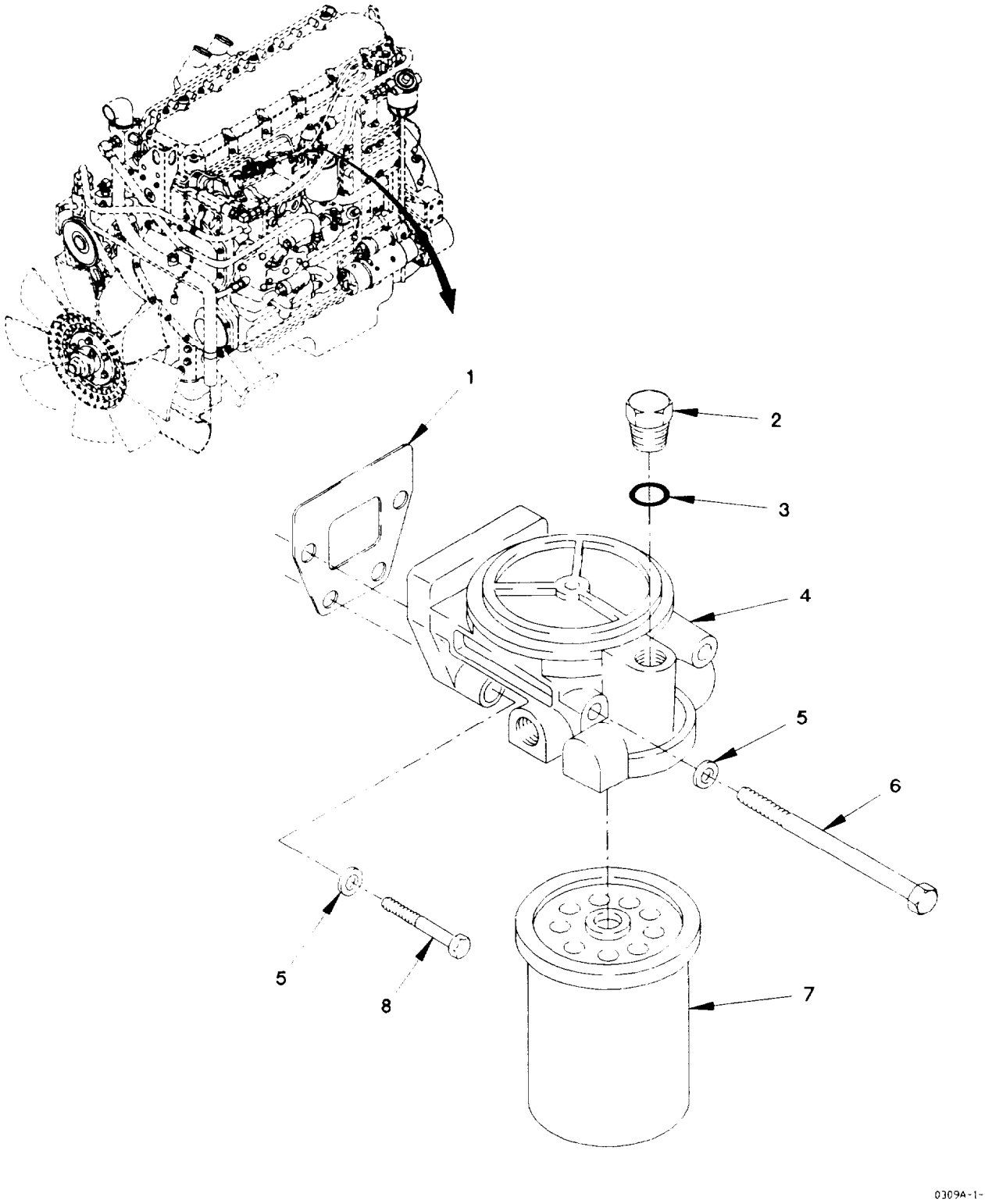

Figure 33. Fuel Filter

(1) ITEM NO	(2) SMR CODE	(3) FSCM	(4) PART NUMBER	(5) DESCRIPTION AND USABLE ON CODE (UOC)	(6) QTY
				GROUP 0309: FUEL FILTERS	
				FIG. 33 FUEL FILTER	
1	PAOZZ	11083	7C1159	GASKET PART OF KIT P/N 9X8318	1
2	PAOZZ	11083	9S4191	PLUG, MACHINE THREAD	1
3	PAOZZ	11083	3J1907	O-RING	1
4	PAOZZ	11083	4W5158	HEAD, FLUID FILTER	1
5	PAOZZ	11083	9M1974	WASHER, FLAT M8.8	4
6	PAOZZ	11083	6V9607	SCREW, CAP, HEXAGON H	2
7	PAOZZ	11083	7E9763	FILTER ELEMENT, FLUI	1
8	PAOZZ	11083	6V5218	SCREW, CAP, HEXAGON H M8 X 1.25 X 35	2
				END OF FIGURE	

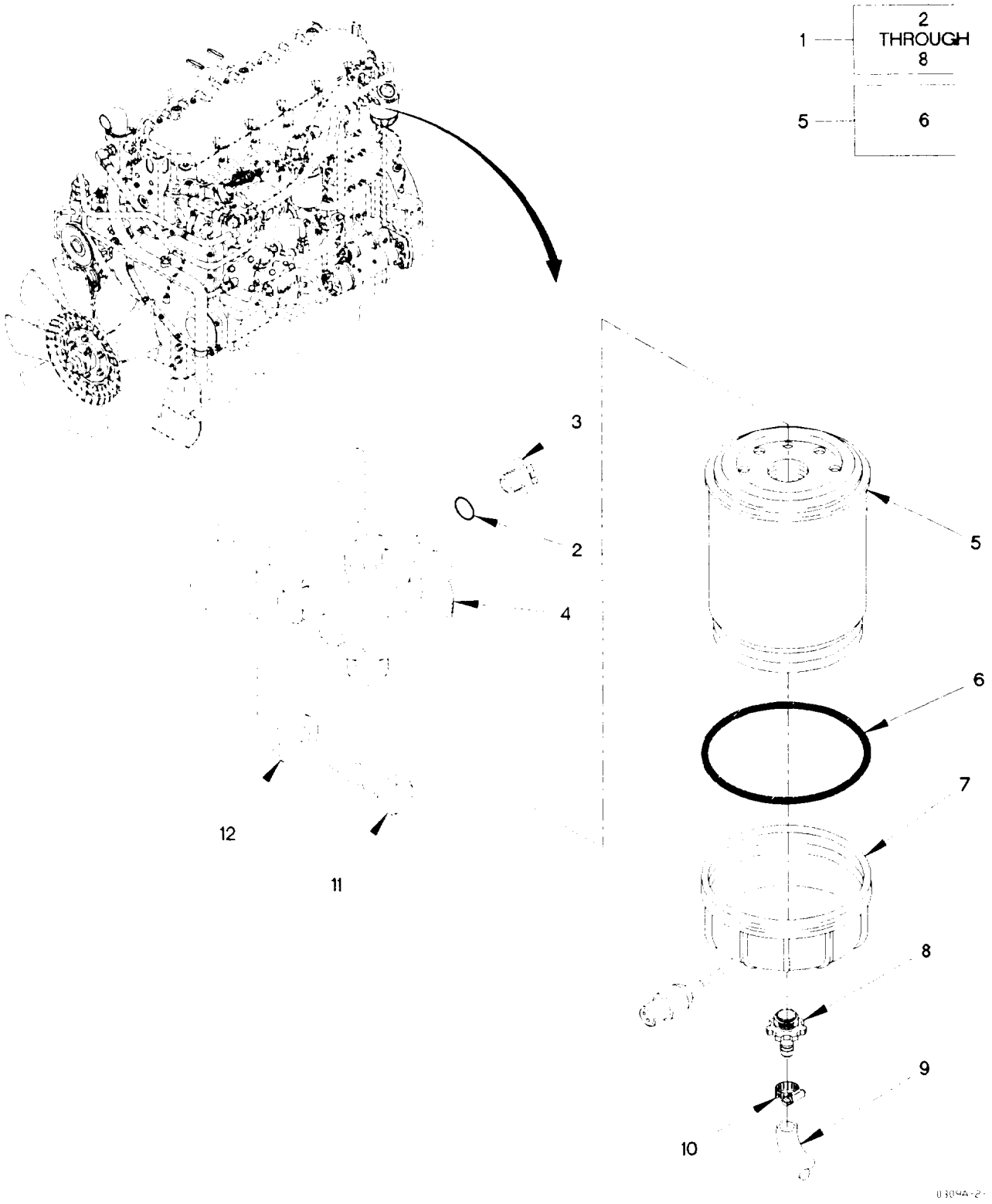

Figure 34. Fuel/Water Separator

(1) ITEM NO	(2) SMR CODE	(3) FSCM	(4) PART NUMBER	(5) DESCRIPTION AND USABLE ON CODE (UOC)	(6) QTY
				GROUP 0309: FUEL FILTERS FIG. 34 FUEL/WATER SEPARATOR	
1	PAOOO	55752	445R-SS-01	FILTER, FLUID	1
2	PAOZZ	55752	43506	.O-RING	1
3	PAOZZ	55752	RK11-1677	.PLUG, VENT	1
4	PAOZZ	55752	RK22140	.FILTER, FLUID	1
5	PAOZZ	55752	R22146	.FILTER, ELEMENT, FLUI FUEL/WATER SEPARATOR	1
6	PAOZZ	55752	22333	. .O-RING	1
7	PAOZZ	55752	RK22141	.FILTER BODY, FLUID	1
8	PAFZZ	55752	21104	.KNOB	1
9	MOOZZ	81349	M13444T1.375X24	HOSE, NONMETALLIC MAKE FROM HOSE P/N: 2565-6 (00624) X 24 IN LONG	1
10	PAOZZ	88907	B54-32780	CLAMP, HOSE	1
11	PAOZZ	05824	M10X1.5X30 DIN933 ST	SCREW, CAP, HEXAGON H M10 X 1.5 X 30	2
12	PAOZZ	19207	12414473-014	WASHER, FLAT M10	2
				END OF FIGURE	

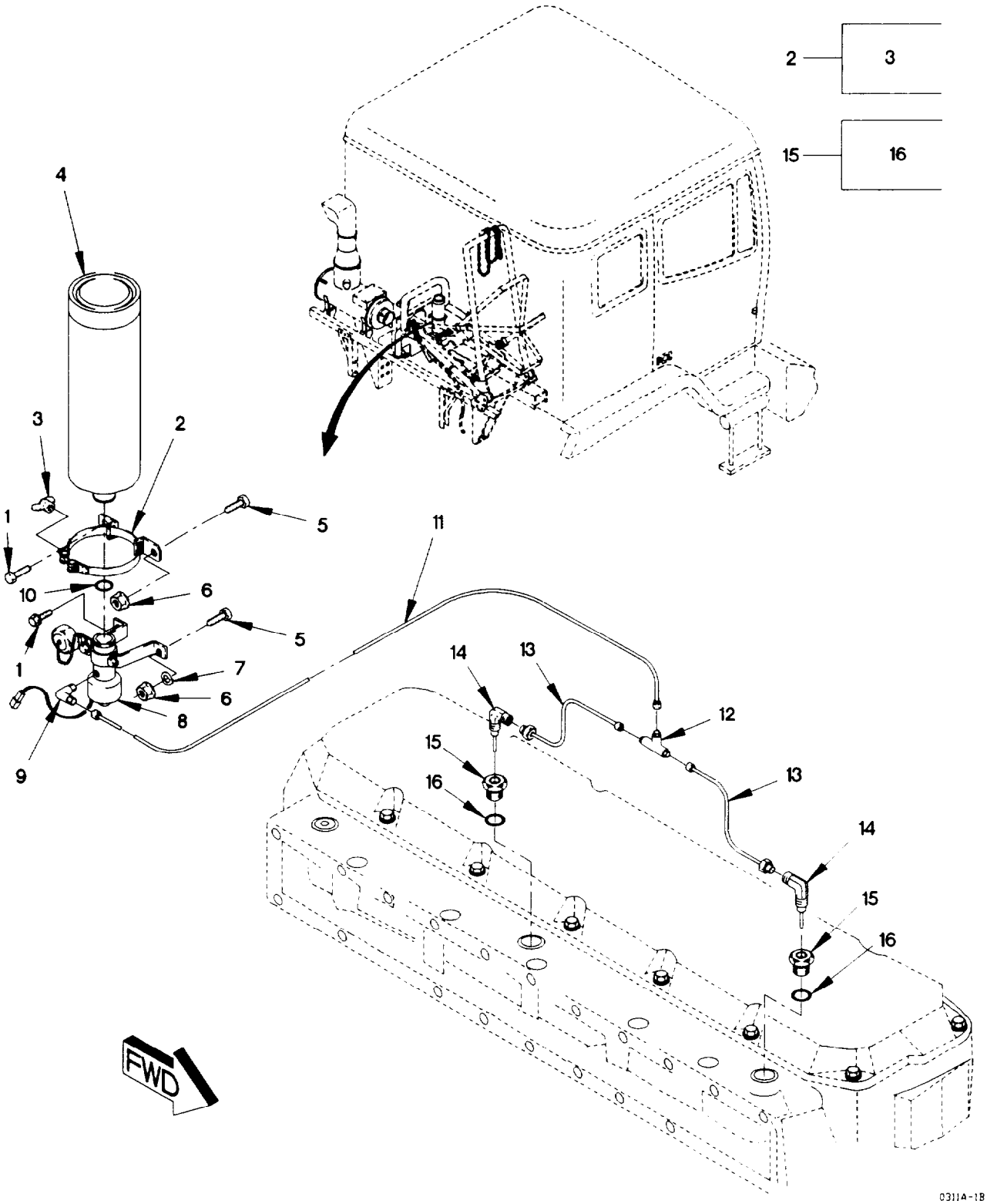

Figure 35. Ether Starting Aid

(1) ITEM NO	(2) SMR CODE	(3) FSCM	(4) PART NUMBER	(5) DESCRIPTION AND USABLE ON CODE (UOC)		(6) QTY
				GROUP 0311: ENGINE STARTING AIDS FIG. 35 ETHER STARTING AID		
1	PAOZZ	19207	12414307-023	BOLT, MACHINE M8 X 1 X 20		2
2	PAOZZ	19207	12277381	CLAMP, LOOP 3 IN		1
3	PAOZZ	96906	MS35426-27	.NUT, PLAIN, WING 1/4-28 X 1		1
4	PAOZZ	78280	LP-535	CYLINDER, ENGINE STA		1
5	PAOZZ	19207	12414307-024	BOLT, MACHINE M8 X 1 X 25		2
6	PAOZZ	19207	12414308-017	NUT, SELF-LOCKING, EX M8 X 1		4
7	PAOZZ	19207	12414560-021	WASHER, SPRING TENSI		1
8	PAOZZ	78280	QS5-5CPT	VALVE, SOLENOID		1
9	PAOZZ	78280	LP1698CT	ELBOW, PIPE TO TUBE		1
10	PAOZZ	61112	QS-1181	GASKET		1
11	MOOZZ	78280	LP-3239-914.5	TUBING, NYLON MAKE FROM TUBING P/N: LP-3239-120 (78280) X 1050 MM LONG	V	
12	PAOZZ	81343	2-2-2 060401BA	TEE, TUBE		1
13	MOOZZ	78280	LP-3239-152.4	TUBING, NYLON MAKE FROM TUBING P/N: LP-3239-120 (78280) X 170 MM LONG	V	
14	PAOZZ	61112	QA-3-1TC	ATOMIZER, STARTING F		2
15	PAOZZ	78280	QS-1428	ADAPTER, STRAIGHT, PI		2
16	PAOZZ	81349	M83248-2-908	.O-RING		1
				END OF FIGURE		

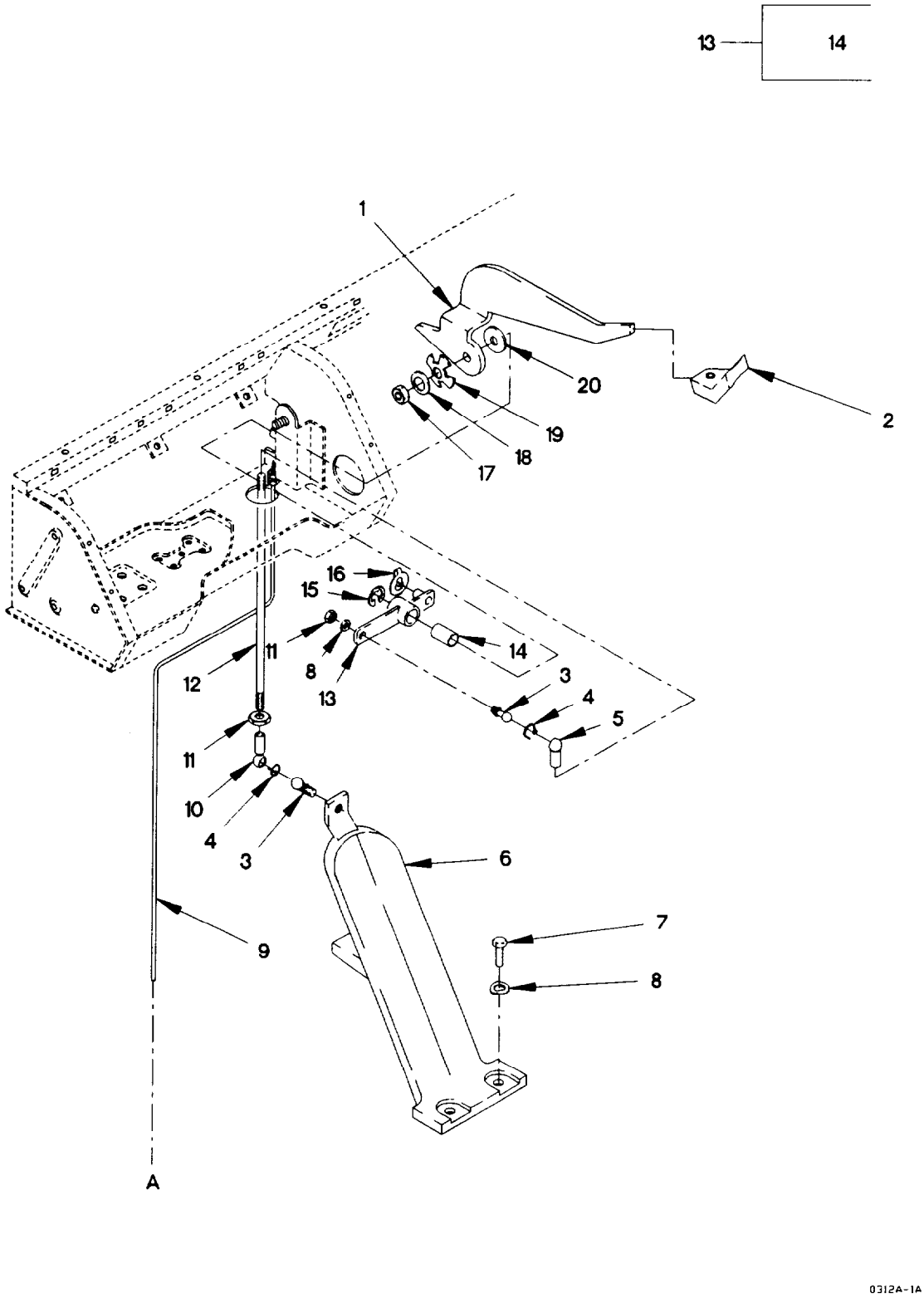

Figure 36. Accelerator, Hand Throttle and Linkage (Sheet 1 of 2)

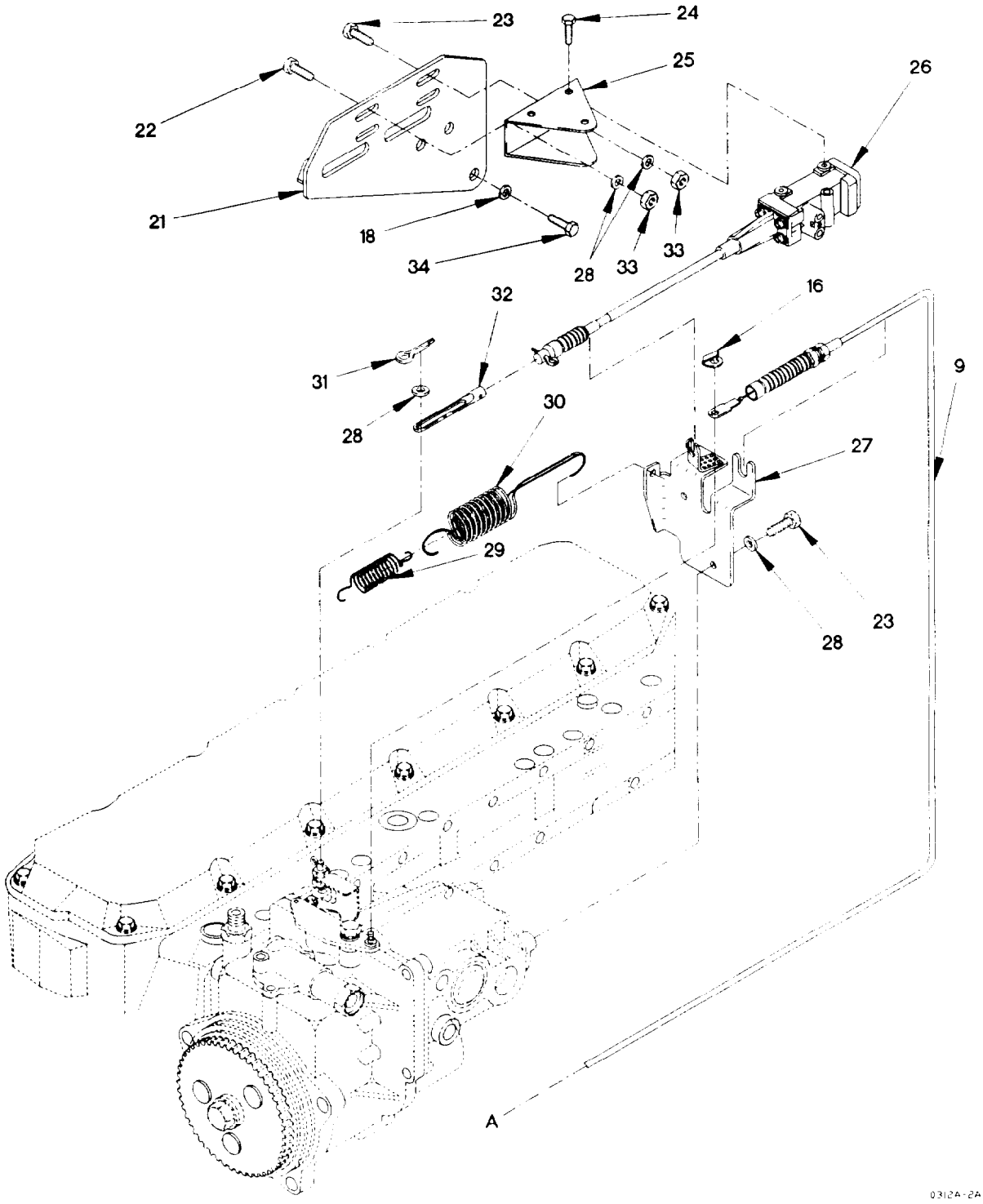

Figure 36. Accelerator, Hand Throttle and Linkage (Sheet 2 of 2)

(1) ITEM NO	(2) SMR CODE	(3) FSCM	(4) PART NUMBER	(5) DESCRIPTION AND USABLE ON CODE (UOC)	(6) QTY
				GROUP 0312: ACCELERATOR, THROTTLE OR CHOKE CONTROLS	
				FIG. 36 ACCELERATOR, HAND THROTTLE AND LINKAGE	
1	PAOZZ	19207	12420562	LEVER, LOCK-RELEASE	1
2	PAOZZ	0FW39	12417587	KNOB	1
3	PAOZZ	19207	12420084-003	STUD, BALL	2
4	PAOZZ	19207	12420086-002	RING, RETAINING	2
5	PAOZZ	19207	12420085-002	SEAT, BALL SOCKET	1
6	PAOZZ	0FW39	12417519	PEDAL ASSEMBLY, CONT	1
7	PAOZZ	15526	DIN933-M6X16-8.8 -A4C	SCREW, CAP, HEXAGON H M6 X 1 X 16	2
8	PAOZZ	19207	12414559-021	WASHER, SPRING TENSI M6.4	3
9	PAOZZ	0FW39	12420561	CABLE ASSEMBLY, CONT	1
10	PAOZZ	0FW39	12417461	BALL JOINT	1
11	PAOZZ	19207	1241474-010	NUT, PLAIN, HEXAGON M6 X 1.0	3
12	PAOZZ	19207	12420558	ROD, THREADED END	1
13	PAOZZ	0FW39	12420564	BELL CRANK	1
14	PAOZZ	09455	CJM-1020	.BEARING, SLEEVE	1
15	PAOZZ	15526	8MMDIN6799	RING, RETAINING	1
16	PAOZZ	11862	15567924	CLIP, RETAINING	1
17	PAOZZ	19207	12414315-009	NUT, SELF-LOCKING, HE M10 X 1.5	1
18	PAOZZ	19207	12414473-014	WASHER, FLAT M10	1
19	PAOZZ	19207	12417503	WASHER, SPRING TENSI M11	1
20	PAOZZ	19207	12417872	PACKING WITH RETAIN	1
21	PAOZZ	19207	12420742	BRACKET, MOUNTING UOC: LAA, LAB, LAC, LAD	1
22	PAOZZ	15526	DIN933-M6X16-8.8 -A4C	SCREW, CAP, HEXAGON H M6 X 1 X 16	3
23	PAOZZ	56161	10503805	SCREW, CAP, HEXAGON H M6 X 1.0 X 20	3
24	PAOZZ	73342	9425115	BOLT, MACHINE	3
25	PAOZZ	73342	29500824	BRACKET, MOUNTING	1
26	PAOZZ	73342	29507766	CONTROL ASSEMBLY, PU	1
27	PAOZZ	19207	12420560	BRACKET, MOUNTING	1
28	PAOZZ	19200	12524631-1	WASHER, FLAT M6	7
29	PAOZZ	24617	15931524	SPRING, HELICAL	1
30	PAOZZ	24617	15961525	SPRING, HELICAL	1
31	PAOZZ	96906	MS24665-151	PIN, COTTER	1
32	PAOZZ	73342	29503631	LEVER, REMOTE CONTRO	1
33	PAOZZ	19207	12414474-010	NUT, PLAIN, HEXAGON M6 X 1.0	4
34	PAOZZ	81495	071 410 36	BOLT, MACHINE M10 X 1.5 X 40	1

END OF FIGURE

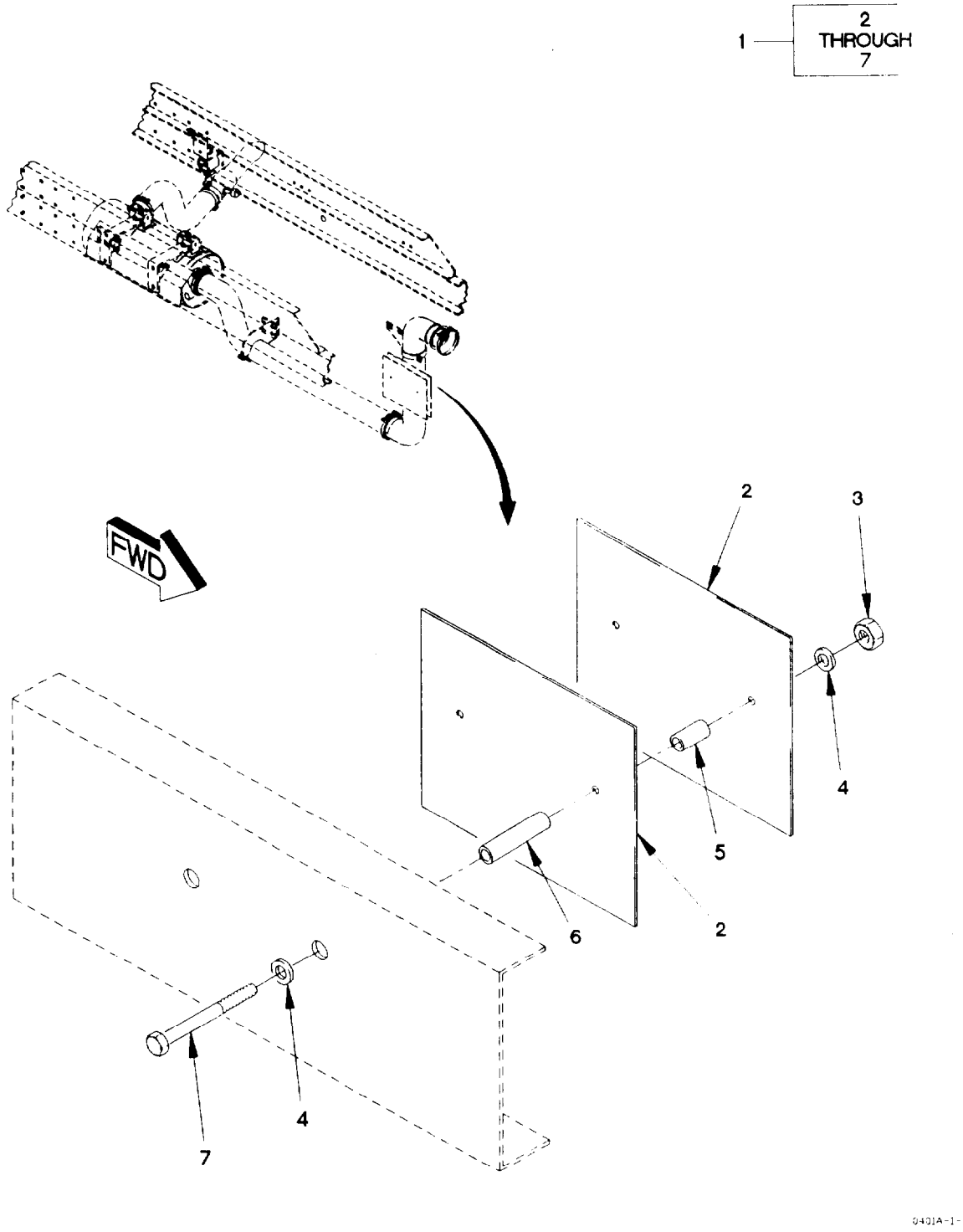

Figure 37. Exhaust Pipe Heat Shield

(1) ITEM NO	(2) SMR CODE	(3) FSCM	(4) PART NUMBER	(5) DESCRIPTION AND USABLE ON CODE (UOC)	(6) QTY
				GROUP 0401: MUFFLER AND PIPES FIG. 37 EXHAUST PIPE HEAT SHIELD	
1	PAOOO	19207	12419232	GUARD, MUFFLER-EXHAU	1
2	PAOZZ	19207	12419231	.GUARD, MUFFLER-EXHAU	2
3	PAOZZ	1FH08	DIN555M8	.NUT, PLAIN, HEXAGON M8 X 1.25	2
4	PAOZZ	34914	990 3861	.WASHER, FLAT M8.4	4
5	MOOZZ	0FW39	12419803-001X	.SPACER MAKE FROM TUBE P/N: A269-55GRADETP304 (81346) X 19MM	2
6	MOOZZ	0FW39	12419803-002X	.SPACER MAKE FROM TUBE P/N: A269-55GRADETP304 (81346) X 65MM	2
7	PAOZZ	19207	12414419-106	.SCREW, CAP, HEXAGON H M8 X 1.25 X 110	2
				END OF FIGURE	

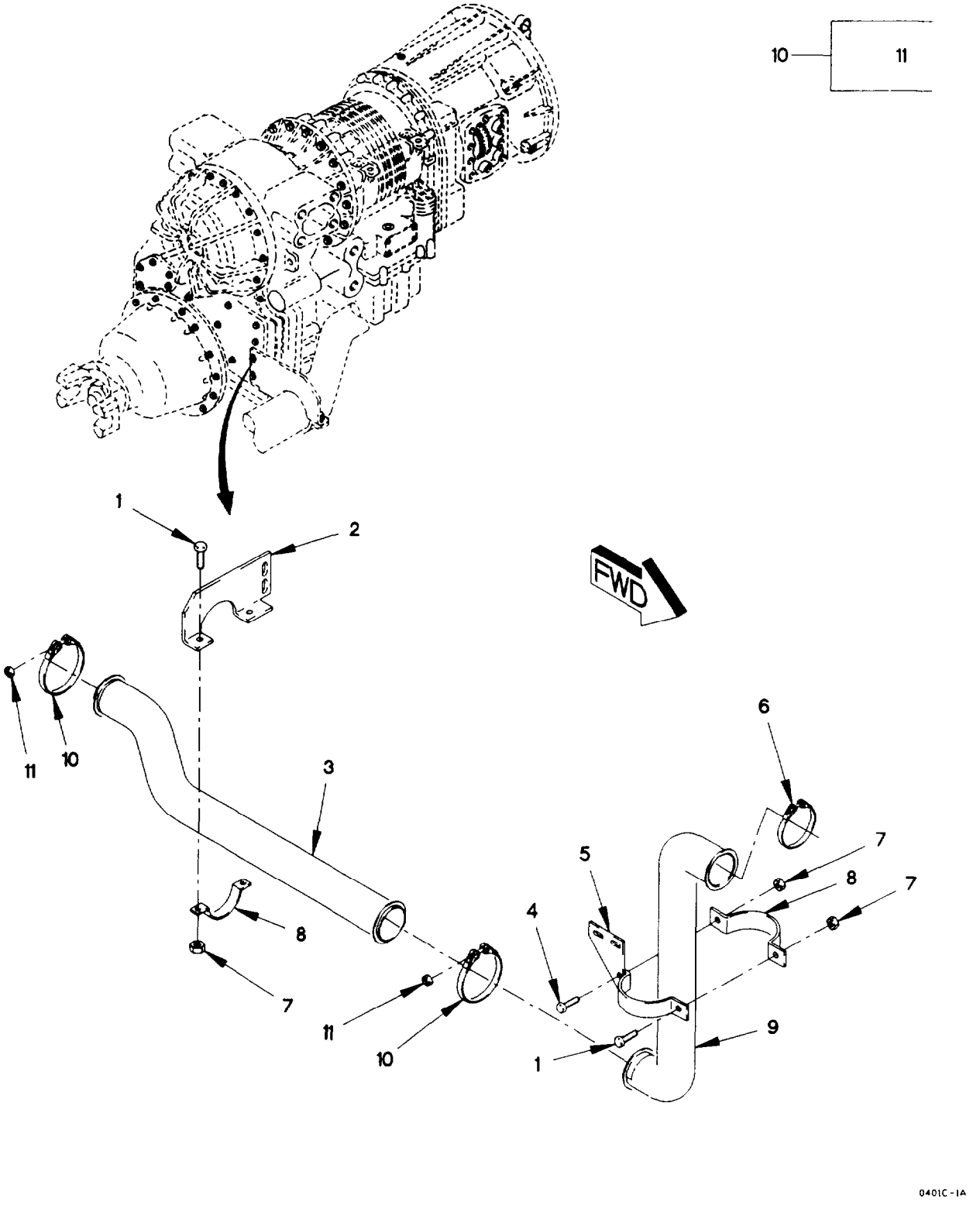

Figure 38. Exhaust Pipes, Brackets, and Clamps

(1) ITEM NO	(2) SMR CODE	(3) FSCM	(4) PART NUMBER	(5) DESCRIPTION AND USABLE ON CODE (UOC)	(6) QTY
				GROUP 0401: MUFFLER AND PIPES FIG. 38 EXHAUST PIPES, BRACKETS AND CLAMPS	
1	PAOZZ	05824	M10X1.5X30 DIN933 ST	SCREW, CAP, HEXAGON H M10 X 1.5 X 30	1
2	PAOZZ	19207	12419904-001	BRACKET, MOUNTING	1
3	PAOZZ	0FW39	12414610-004	PIPE, EXHAUST	1
4	PAOZZ	15526	DIN933-M10X35-8.8-A4C	SCREW, CAP, HEXAGON H M10 X 1.5 X 35	1
5	PAOZZ	19207	12420692	BRACKET, MOUNTING	1
6	PAOZZ	18265	P215432	CLAMP, LOOP	1
7	PAOZZ	19207	12414308-019	NUT, SELF-LOCKING, EX M10 X 1.5	4
8	PAOZZ	19207	12418228-001	STRAP, RETAINING	3
9	PAOZZ	0FW39	12414572-004	PIPE, EXHAUST	1
10	PAOZZ	18265	P20-6606	COUPLING, CLAMP, GROO	2
11	PAOZZ	96906	MS20500-524	.NUT, SELF-LOCKING, HE 5/16-24	1
				END OF FIGURE	

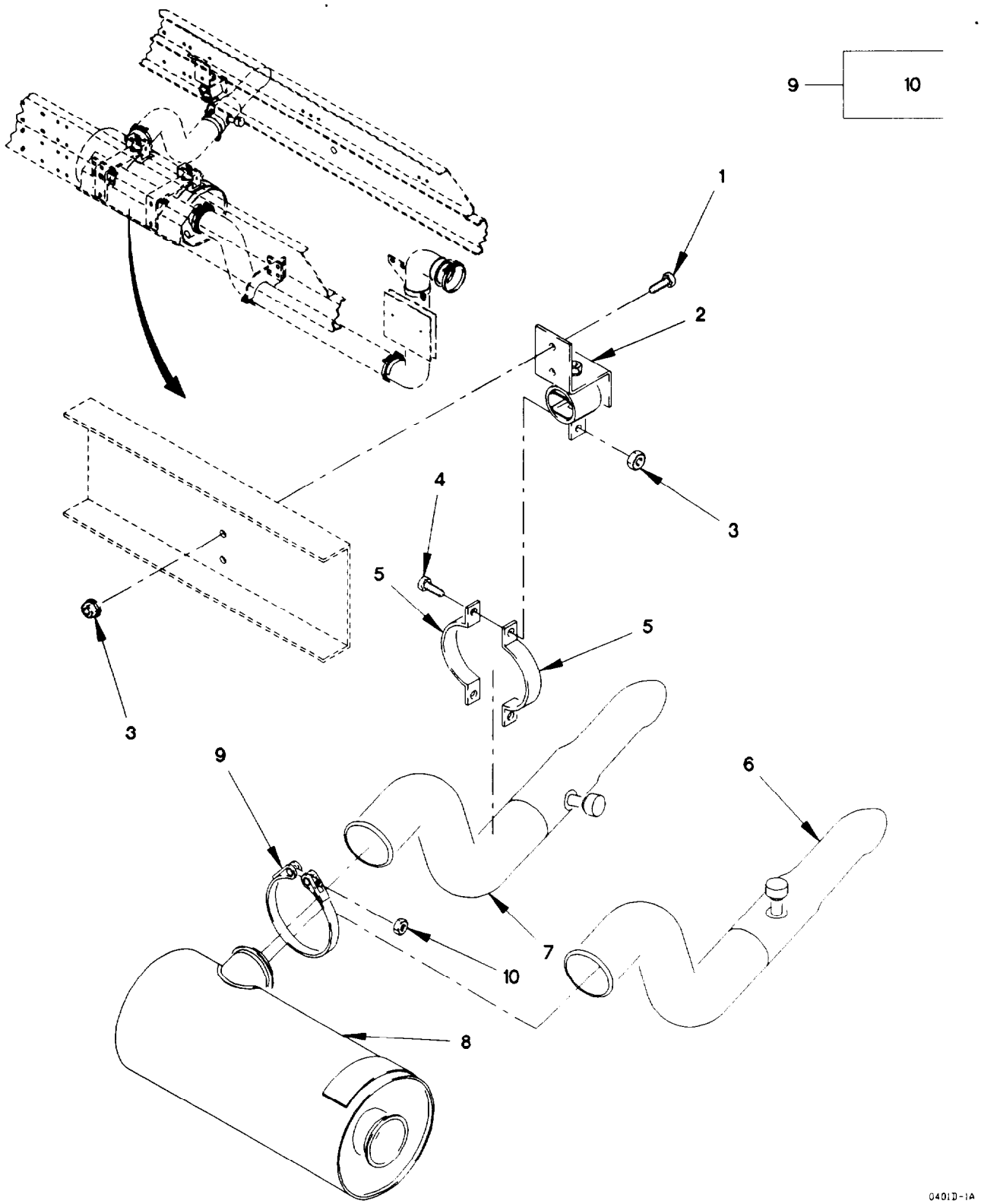

Figure 39. Muffler, Ejector, Clamps and Brackets

(1) ITEM NO	(2) SMR CODE	(3) FSCM	(4) PART NUMBER	(5) DESCRIPTION AND USABLE ON CODE (UOC)	(6) QTY
				GROUP 0401: MUFFLER AND PIPES	
				FIG. 39 MUFFLER, EJECTOR, CLAMPS AND BRACKETS	
1	PAOZZ	19207	12414307-064	BOLT, MACHINE M10 X 1.5 X 30	2
				UOC: LAA, LAB, LAD, LWB, LWD,	
1	PAOZZ	19207	12414307-063	BOLT, MACHINE M10 X 1.5 X 25	2
				UOC: LAC, LWC,	
2	PAOZZ	19207	12414630	HANGER, ENGINE EXHAU	1
3	PAOZZ	19207	12414308-019	NUT, SELF-LOCKING, EX M10 X 1.5	4
4	PAOZZ	05824	M10X1.5X30 DIN93 3 ST	SCREW, CAP, HEXAGON H M10 X 1.5 X30	1
5	PAOZZ	19207	12418228-001	STRAP, RETAINING	2
6	PAOZZ	0FW39	12420423-001	DEFLECTOR, AIR CLEAN	1
				UOC: LAC, LWC,	
7	PAOZZ	18265	EEH00-2226	PIPE, EXHAUST	1
				UOC: LAA, LAB, LAD, LWB, LWD,	
8	PAOZZ	0FW39	12414611-01	MUFFLER, EXHAUST	1
9	PAOZZ	18265	P20-6606	COUPLING, CLAMP, GROO	1
10	PAOZZ	96906	MS20500-524	.NUT-SELF-LOCKING, HE 5/16-24	1
				END OF FIGURE	

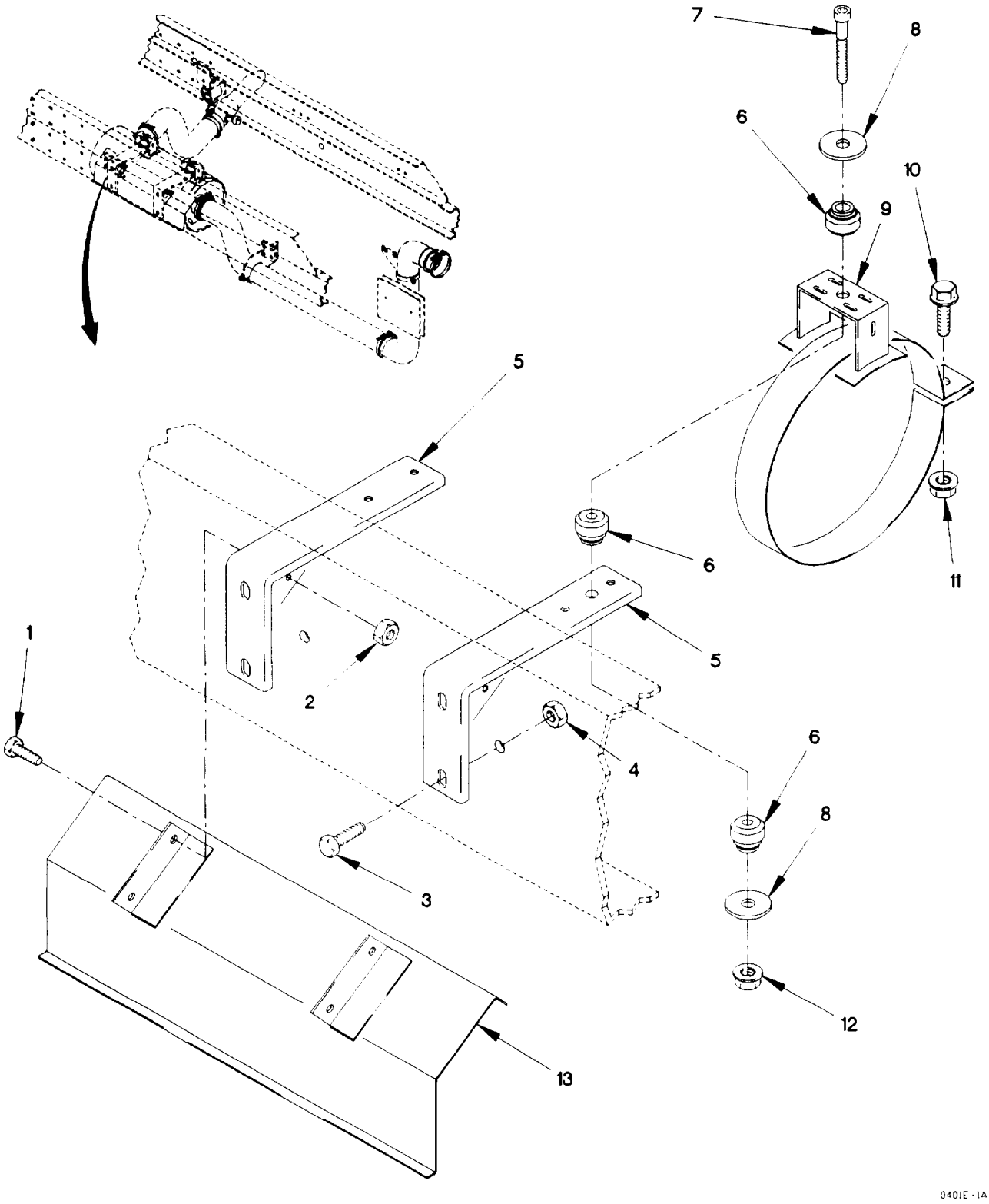

Figure 40. Muffler Heat Shield, Clamps, and Resilient Mounts

(1) ITEM NO	(2) SMR CODE	(3) FSCM	(4) PART NUMBER	(5) DESCRIPTION AND USABLE ON CODE (UOC)	(6) QTY
				GROUP 0401: MUFFLER AND PIPES FIG. 40 MUFFLER HEAT SHIELD, CLAMPS AND RESILIENT MOUNTS	
1	PAOZZ	19207	12414307-023	BOLT, MACHINE M8 X 1 X 20	4
2	PAOZZ	19207	12414308-017	NUT, SELF-LOCKING, EX M8 X 1	8
3	PAOZZ	19207	12414419-136	SCREW, CAP, HEXAGON H M12 X 1.75 X 40	4
4	PAOZZ	19207	12414315-012	NUT, PLAIN, HEXAGON M12 X 1.75	4
5	PAOZZ	0FW39	12414627-003	HANGER, ENGINE EXHAU	2
6	PAFZZ	19207	12421402	GROMMET, NONMETALLIC	6
7	PAFZZ	19207	12414475-131	SCREW, CAP, SOCKET HE M10 X 1.5 X 80	2
8	PAFZZ	19207	12417948-004	SPACER, SLEEVE	4
9	PAFZZ	0FW39	12414629-005	HANGER, ENGINE EXHAU	2
10	PAFZZ	05824	M10X1.5X30 DIN933 ST	SCREW, CAP, HEXAGON H M10 X 1.5 X 30	1
11	PAFZZ	19207	12414308-019	NUT, SELF-LOCKING, EX M10 X 1.5	2
12	PAOZZ	19207	12414315-009	NUT, SELF-LOCKING, HE M10 X 1.5	2
13	PAOZZ	19207	12419283	GUARD, MUFFLER-EXHAU	1
				END OF FIGURE	

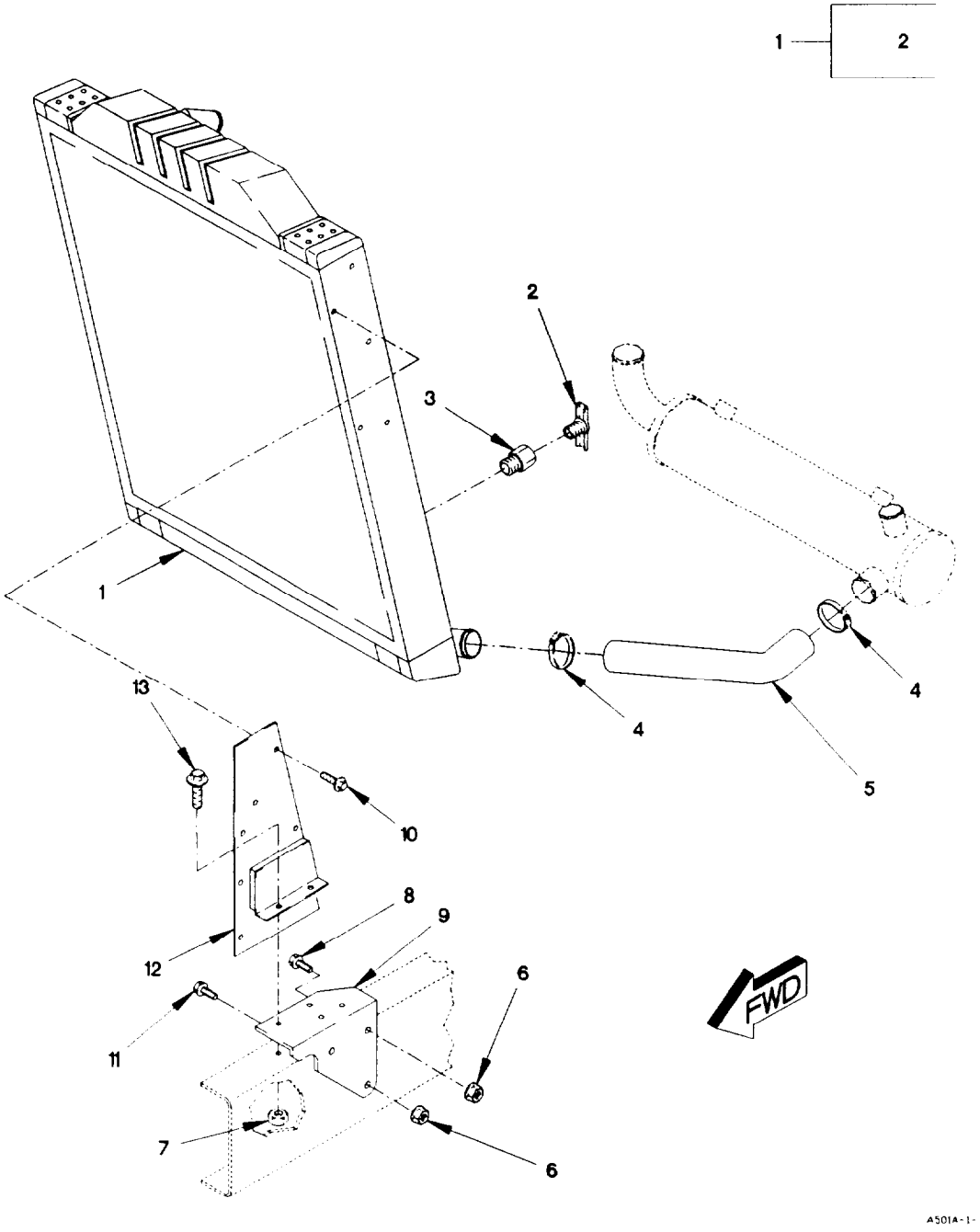

Figure 41. Radiator, Overflow Tank, Hoses, and Fittings (Sheet 1 of 3)

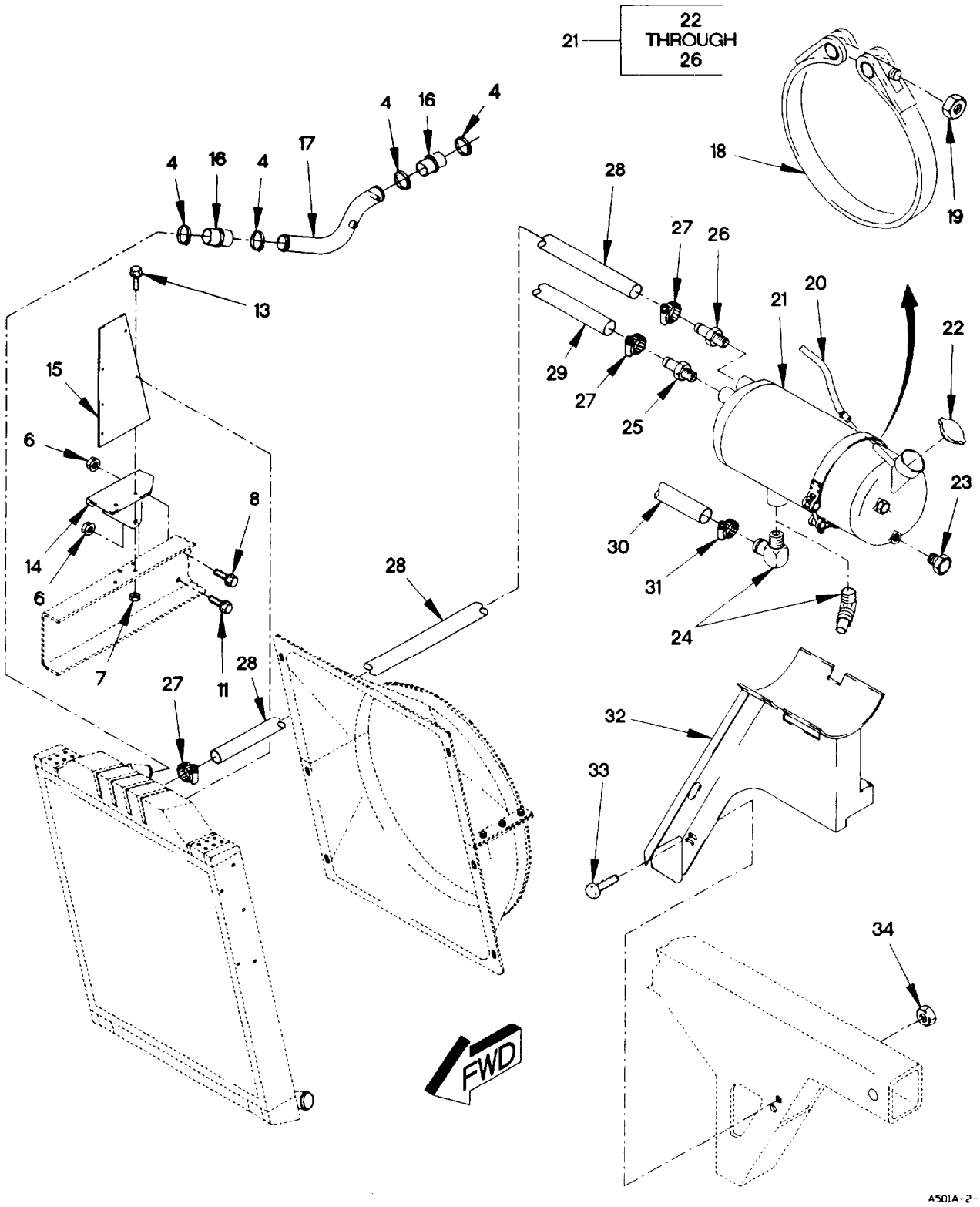

Figure 41. Radiator, Overflow Tank, Hoses, and Fittings (Sheet 2 of 3)

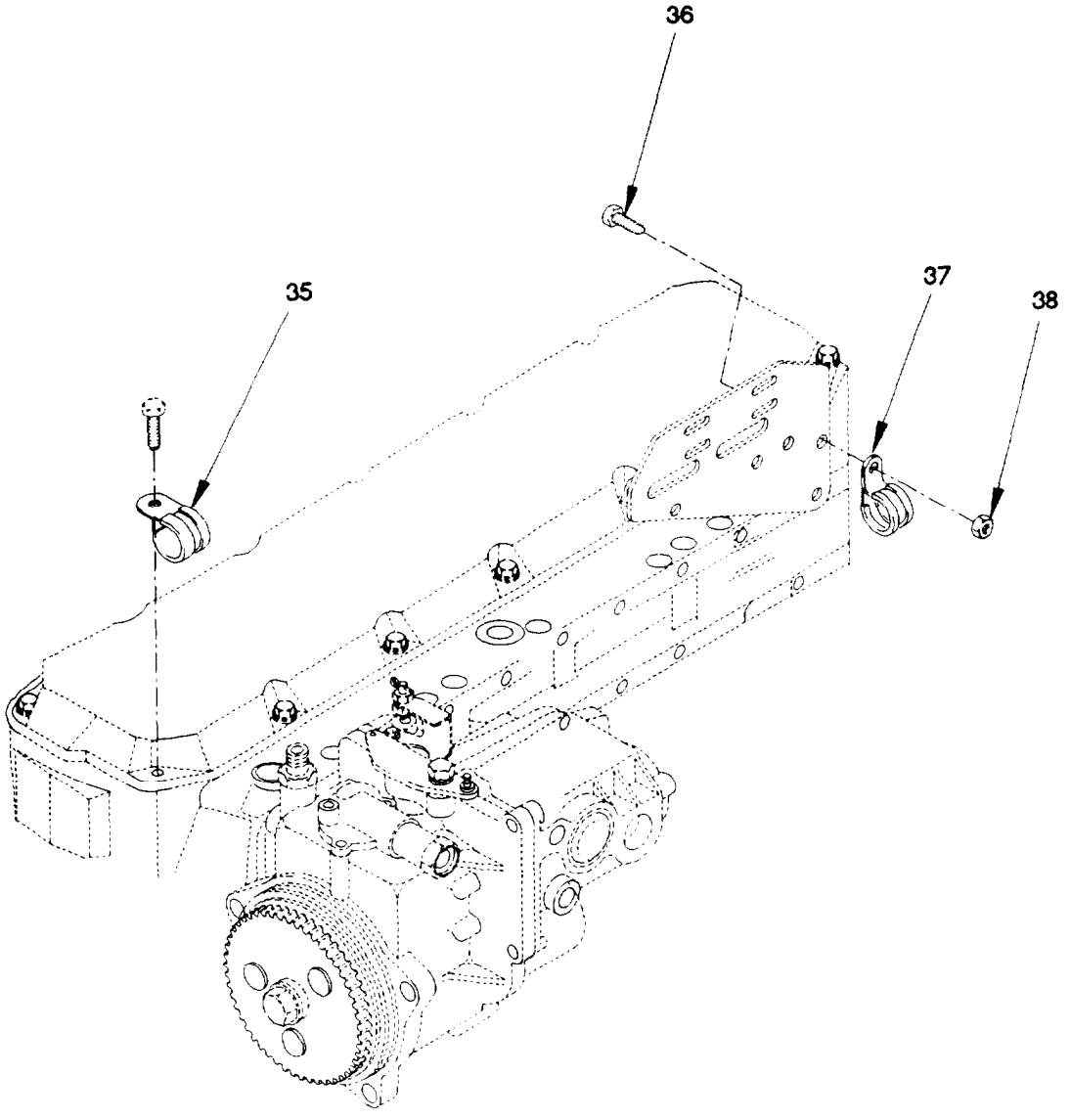

Figure 41. Radiator, Overflow Tank, Hoses, and Fittings (Sheet 3 of 3)

(1) ITEM NO	(2) SMR CODE	(3) FSCM	(4) PART NUMBER	(5) DESCRIPTION AND USABLE ON CODE (UOC)	(6) QTY
				GROUP 0501: RADIATOR, EVAPORATIVE COOLER OR HEAT EXHANGER	
				FIG. 41 RADIATOR, OVERFLOW TANK, HOSES, AND FITTINGS	
1	PAOZZ	67049	12378880-004	RADIATOR, ENGINE COO	1
2	PAOZZ	67049	305546-901	.COCK, DRAIN	1
3	PAOZZ	81343	4-4 130139C	COUPLING, PIPE	1
4	PAOZZ	25281	065S9	CLAMP, HOSE	6
5	PAOZZ	19207	12418039	HOSE, PREFORMED	1
6	PAOZZ	19207	12414308-025	NUT, SELF-LOCKING, EX M16 X 1.5	6
7	PAOZZ	19207	12414308-019	NUT, SELF-LOCKING, EX M10 X 1.5	4
8	PAOZZ	19207	12414307-0140	BOLT, MACHINE M16 X 1.5 X 45	4
9	PAOZZ	19207	12378893	BRACKET, ANGLE	1
10	PAOZZ	19207	12414307-035	BOLT, MACHINE M8 X 1.5 X 16	10
11	PAOZZ	19207	12421697-003	BOLT, MACHINE M16 X 1.5 X 60	2
12	PAOZZ	19207	12417460	BRACKET, MOUNTING	1
13	PAOZZ	19207	12414307-063	BOLT, MACHINE M10 X 1.5 X 25	4
14	PAOZZ	0FW39	12378898	BRACKET, VEHICULAR C	1
15	PAOZZ	19207	12417632	BRACKET, VEHICULAR C	1
16	PAOZZ	16632	STE1002	HOSE, PREFORMED	2
17	PAOZZ	19207	12420634-003	TUBE, BENT, METALLIC	1
18	PAOZZ	19207	12421379-004	BAND, RETAINING	1
19	PAOZZ	96906	MS21046C5	NUT, SELF-LOCKING 5/16-24	1
20	MOOZZ	96906	M13444T1.31X23	HOSE, NONMETALLIC MAKE FROM HOSE P/N: 33H581 (80244) X 23 IN LONG	V
21	PAOOO	0FW39	12421190-001	TANK, RADIATOR, OVERF	1
22	PAOZZ	0FW39	12419131-003	.CAP, FILLER OPENING	1
23	PAOZZ	24346	CS22600-04	.INDICATOR, SIGHT, LIQ	1
24	PAOZZ	81343	16-16 430260B	.ELBOW, PIPE TO HOSE 90 DEG UOC: LAA, LAB, LAD, LWB, LWD	1
24	PAOZZ	81343	16-16 430360B	.ELBOW, PIPE TO HOSE 45 DEG UOC: LAC, LWC	1
25	PAOZZ	30327	KF08-04PS	.ADAPTER, STRAIGHT, PI	1
26	PAOZZ	93061	125HBL-4-4	.ADAPTER, STRAIGHT, PI	1
27	PAOZZ	88907	B54-32780	CLAMP, HOSE	4
28	PAOZZ	16632	FLX550002028800	HOSE, NONMETALLIC	1
29	PAOZZ	16632	FLX5500-0015	HOSE, NONMETALLIC	1
30	PAOZZ	16632	FLX5500-0013	HOSE, NONMETALLIC	1
31	PAOZZ	7Z588	9420	CLAMP, HOSE	2
32	PAOZZ	19207	12420735	BRACKET, MOUNTING	1
33	PAOZZ	19207	12414307-064	BOLT, MACHINE M10 X 1.5 X 30	3
34	PAOZZ	19207	12414308-019	NUT, SELF-LOCKING, EX M10 X 1.5	3
35	PAOZZ	18076	S630H-20	CLAMP, LOOP	1
36	PAOZZ	56161	10503805	SCREW, CAP, HEXAGON H M6 X 1 X 20	2
37	PAOZZ	18076	S630H-20	CLAMP, LOOP, HVY DUTY	2
38	PAOZZ	19207	12414308-002	NUT, SELF-LOCKING, EX M6 X 1	2

END OF FIGURE

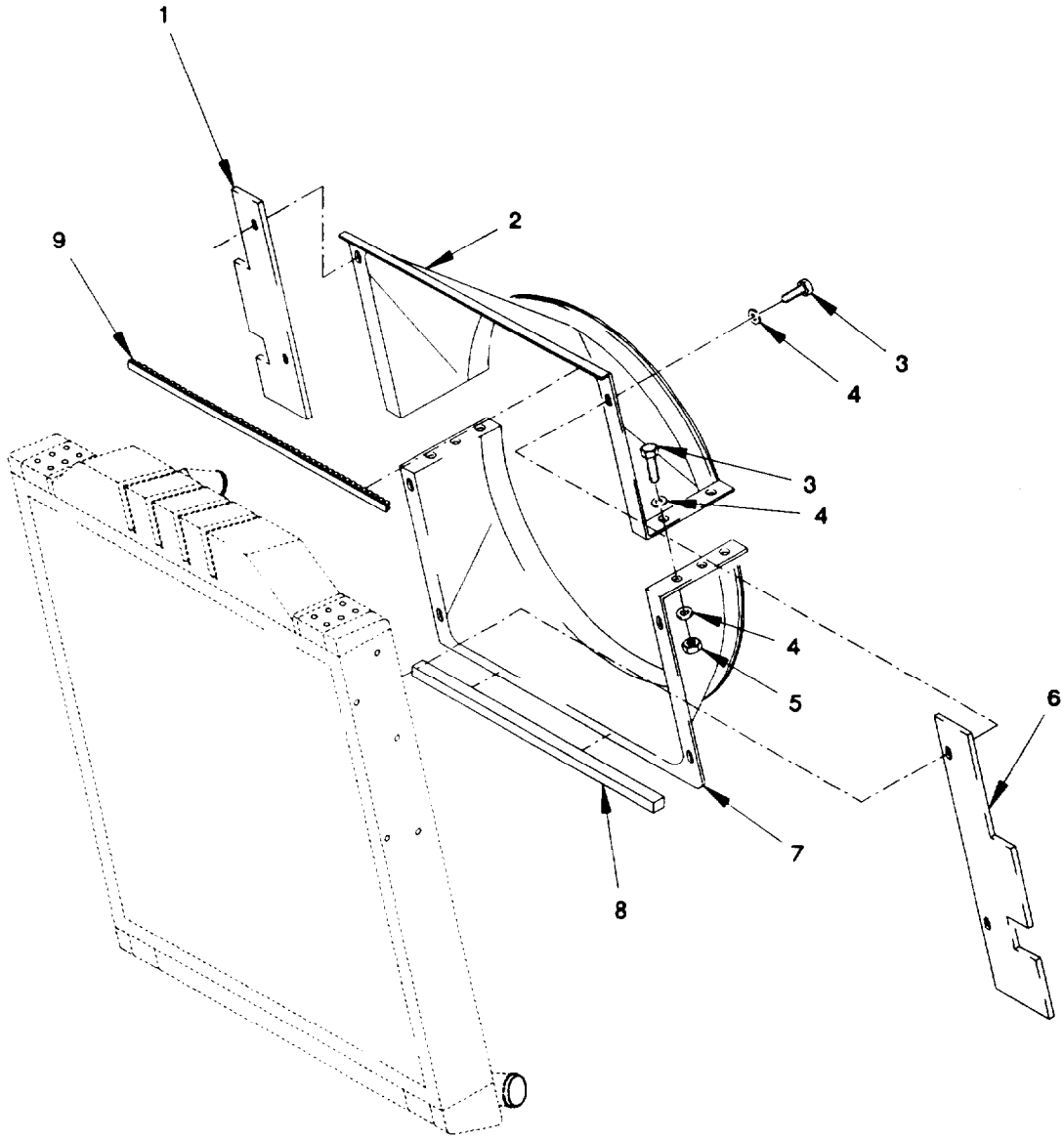

Figure 42. Radiator Fan Shroud

(1) ITEM NO	(2) SMR CODE	(3) FSCM	(4) PART NUMBER	(5) DESCRIPTION AND USABLE ON CODE (UOC)	(6) QTY
				GROUP 0502: COWLING, DEFLECTORS, AIR DUCTS, SHROUDS	
				FIG. 42 RADIATOR FAN SHROUD	
1	PFOZZ	19207	12420065	BAFFLE, AIRFLOW, DIES	1
2	PAOZZ	0FW39	12420754	SHROUD, FAN, RADIATOR	1
3	PAOZZ	56161	1053805	SCREW, CAP, HEXAGON H M6 X 1 X 20	14
4	PAOZZ	19207	12417948-002	WASHER, FLAT M6.6	18
5	PAOZZ	15526	DIN 934 ST M6	NUT, SELF-LOCKING, HE M6 X 1	6
6	PFOZZ	0FW39	12420066	BAFFLE, AIRFLOW, DIES	1
7	PAOZZ	19207	12420755	SHROUD, FAN, RADIATOR	1
8	MOOZZ	19207	12420420-3X660	WEATHER STRIP MAKE FROM SEAL P/N: 12420420-003 (19207) X660 MM LG	1
9	PAOZZ	96906	MS21266-4N	GROMMET, NONMETALLIC	1
				END OF FIGURE	

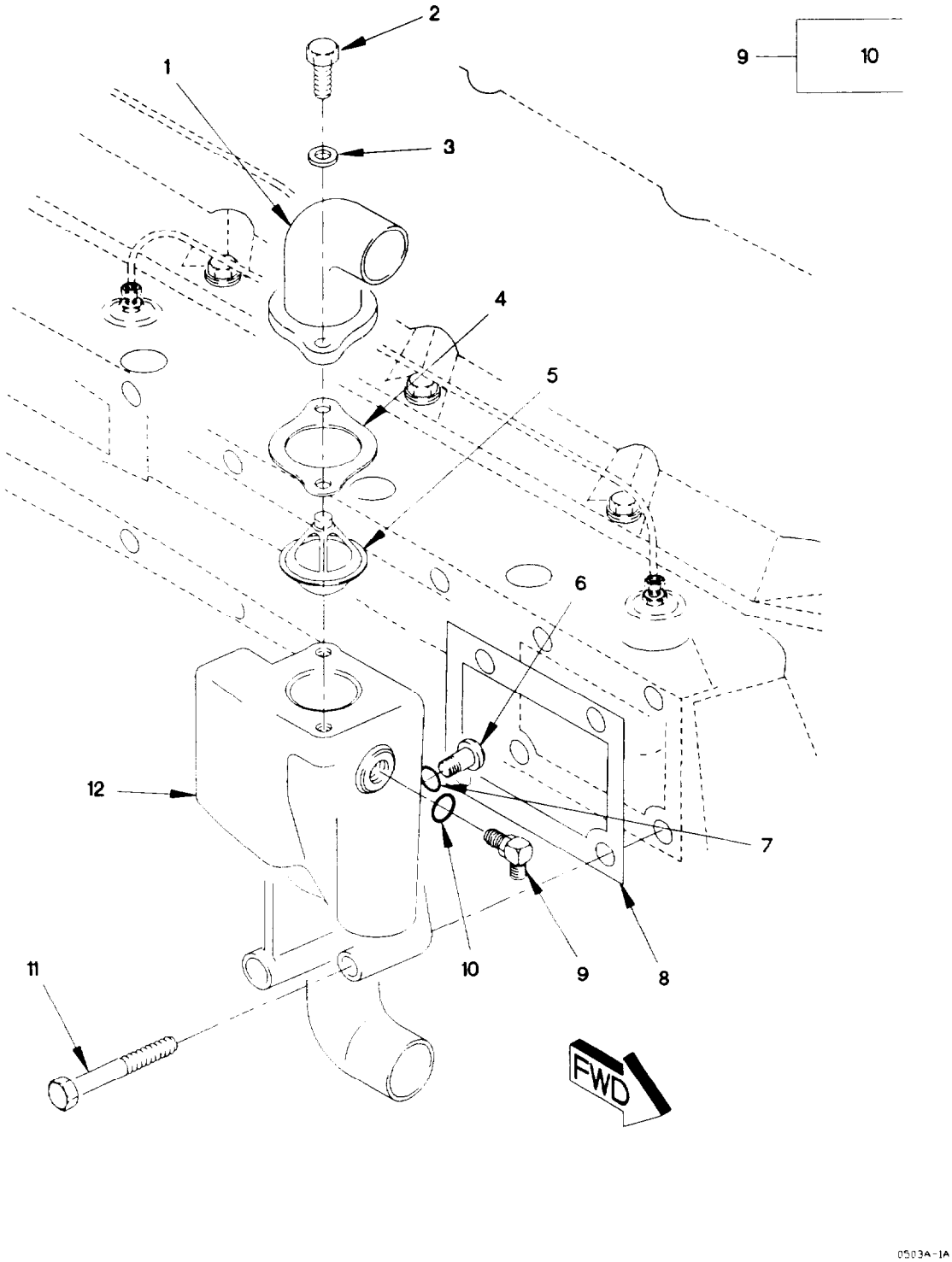

Figure 43. Thermostat and Cooling Tubes (Sheet 1 of 5)

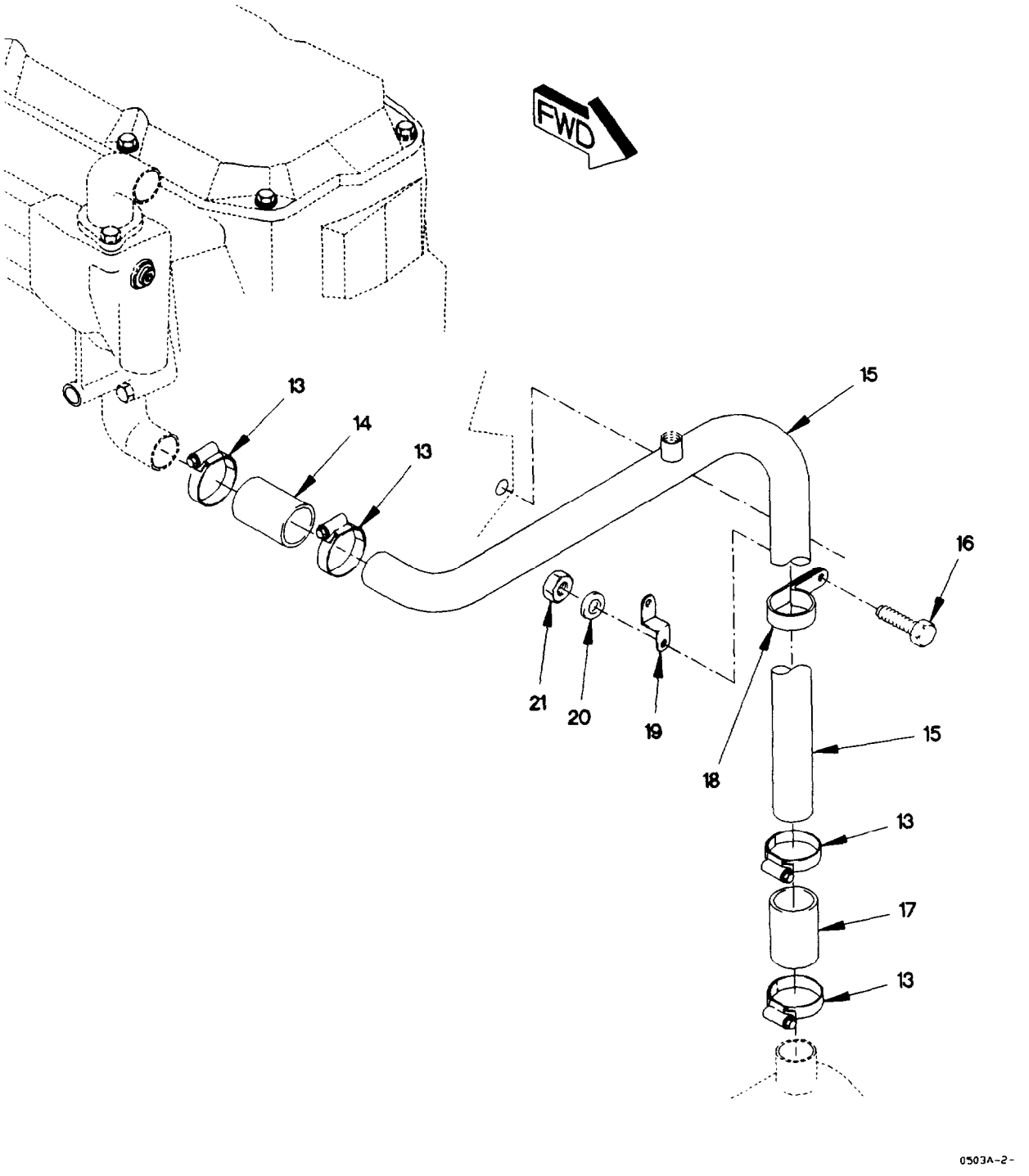

Figure 43. Thermostat and Cooling Tubes (Sheet 2 of 5)

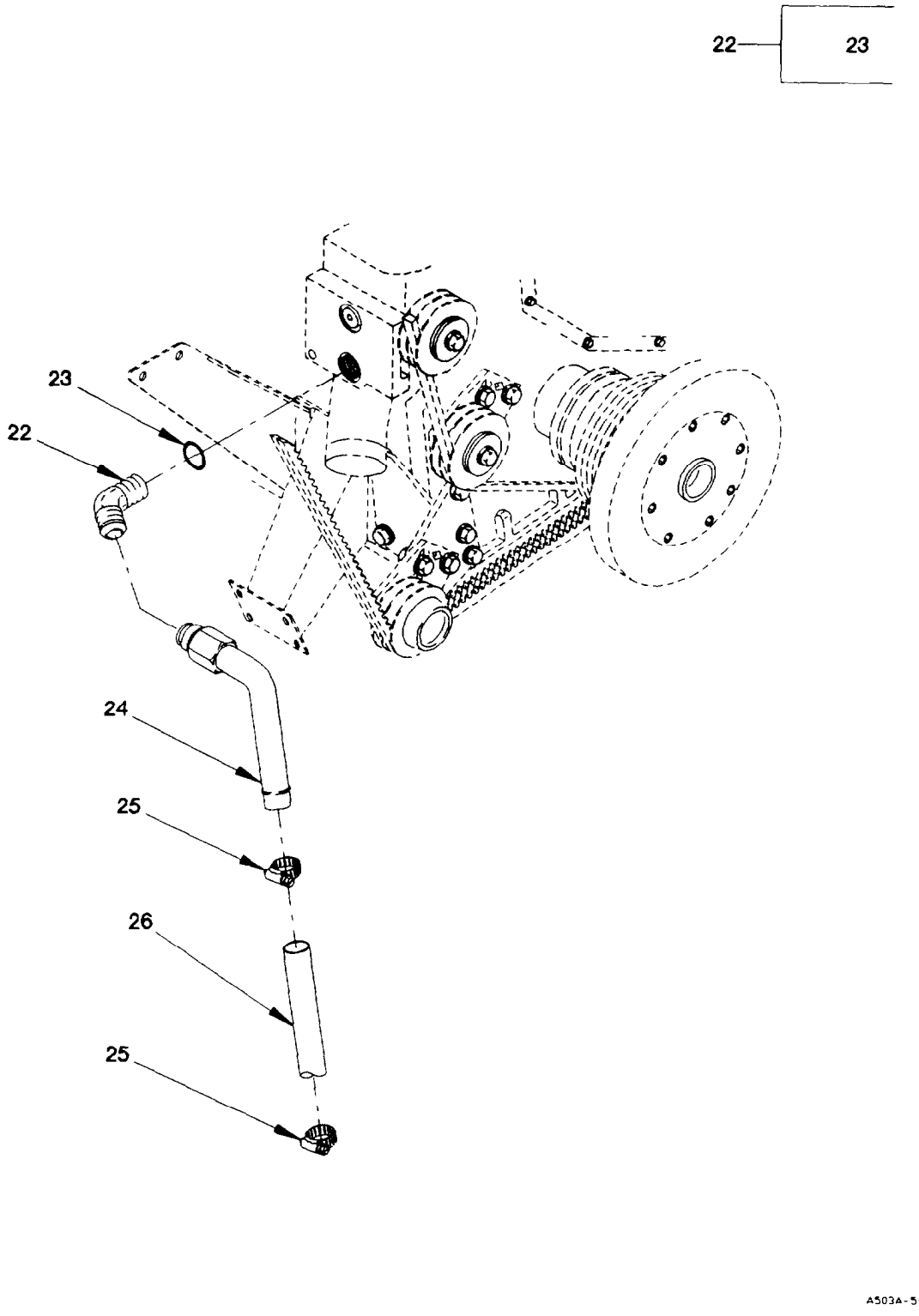

Figure 43. Thermostat and Cooling Tubes (Sheet 3 of 5)

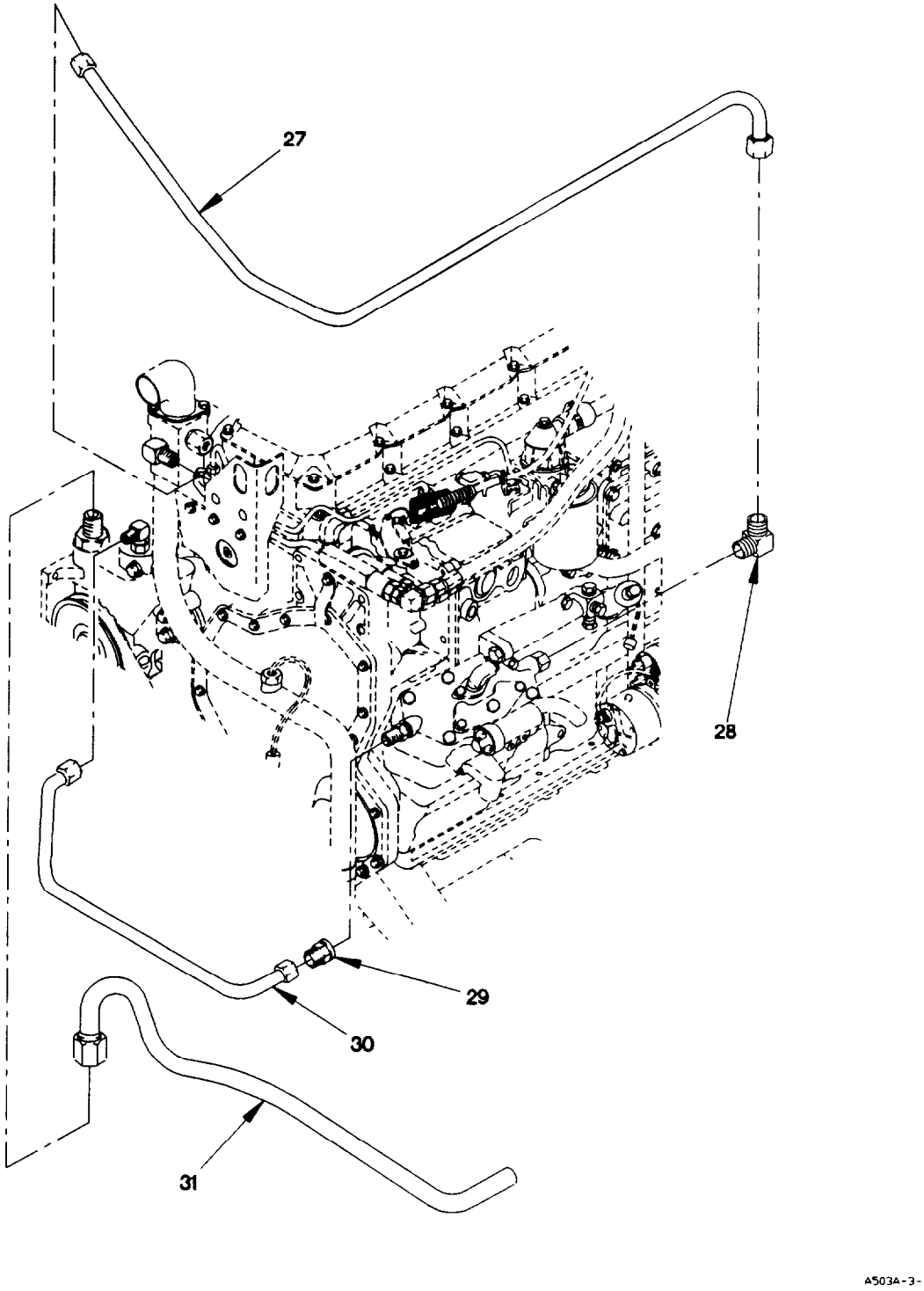

Figure 43. Thermostat and Cooling Tubes (Sheet 4 of 5)

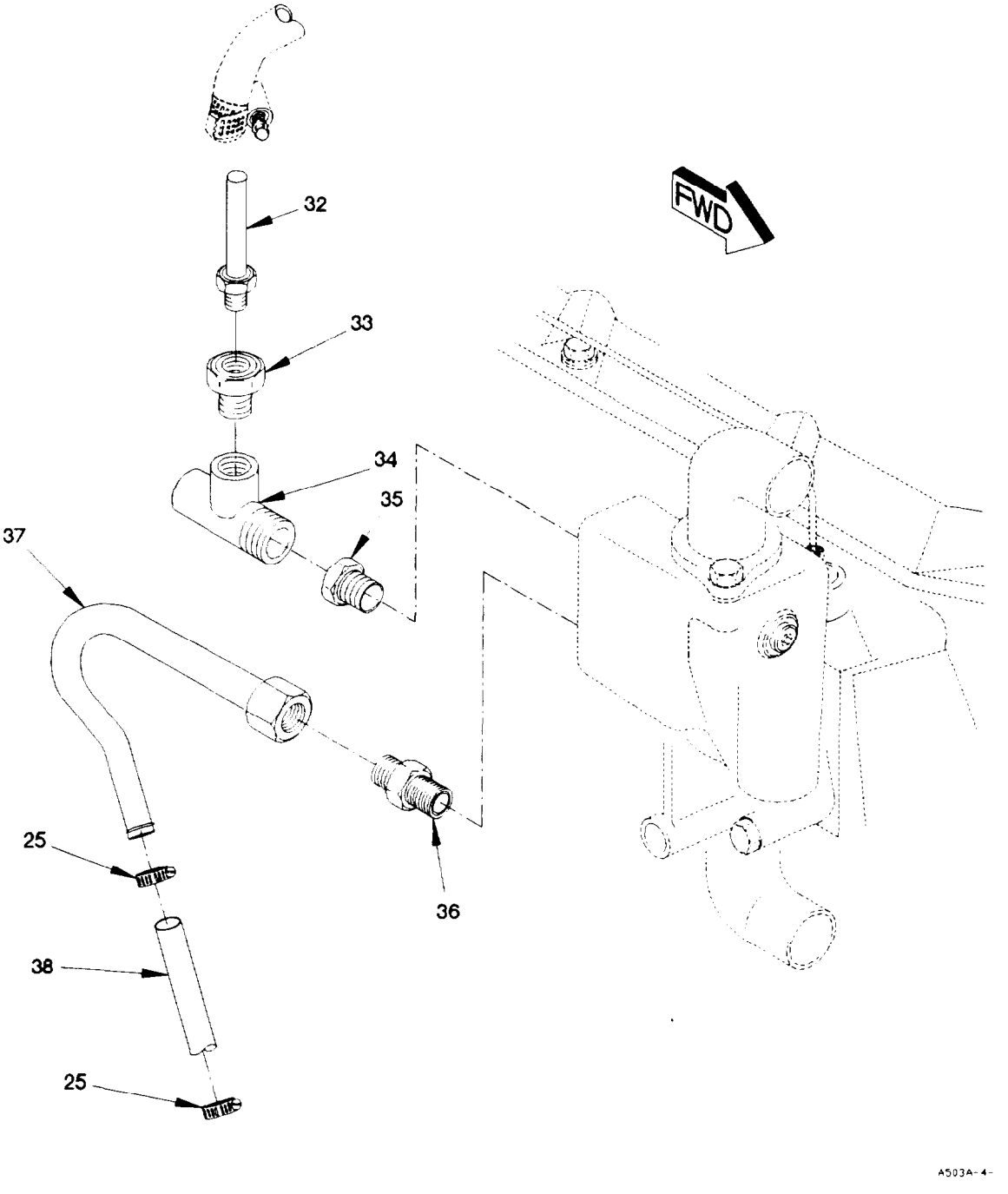

Figure 43. Thermostat and Cooling Tubes (Sheet 5 of 5)

(1) ITEM NO	(2) SMR CODE	(3) FSCM	(4) PART NUMBER	(5) DESCRIPTION AND USABLE ON CODE (UOC)	(6) QTY
				GROUP 0503: WATER MANIFOLD, HEADERS, THERMOSTATS AND HOUSING	
				FIG. 43 THERMOSTAT AND COOLING TUBES	
1	PAOZZ	11083	7C7911	ELBOW, PIPE	1
2	PAOZZ	11083	6V3940	SCREW, CAP, HEXAGON H M8 X 1.25 X 25	2
3	PAOZZ	11083	9M1974	WASHER, FLAT M8.8	2
4	PAOZZ	11083	2W7212	GASKET PART OF KIT P/N 9X8318	1
5	PAOZZ	11083	119-3075	TERMOSTAT, FLOW CON	1
6	PAOZZ	11083	9S8004	PLUG, MACHINE THREAD	1
7	PAOZZ	11083	3J1907	O-RING PART OF KIT P/N 7X2521	1
8	PAOZZ	11083	4W0549	GASKET PART OF KIT P/N 9X8318	1
9	PAOZZ	96906	MS51527A8	ELBOW, TUBE TO BOSS	1
10	PAOZZ	02697	3-908N552-90	.O-RING	1
11	PAOZZ	11083	6V5230	SCREW, CAP, HEXAGON H M10 X 1.5 X 60	2
12	PAOZZ	11083	5R9016	MANIFOLD, FLUID COOL	1
13	PAOZZ	25281	050S9	CLAMP, HOSE	4
14	PAOZZ	16632	FLX550012001200	HOSE, NONMETALLIC	1
15	PAOZZ	19207	12414435-003	TUBE, BENT, METALLIC	1
16	PAOZZ	64678	000933 006058	SCREW, CAP, HEXAGON H M6 X 1 X 25	1
17	PAOZZ	19207	12414553-002	HOSE, NONMETALLIC	1
18	PAOZZ	96906	MS9025-23	CLAMP, LOOP 1.5 IN	1
19	PAOZZ	19207	12419920	BRACKET, DOUBLE ANGL	1
20	PAOZZ	19200	12524631-1	WASHER, FLAT M6	1
21	PAOZZ	15526	DIN 934 ST M6	NUT, SELF-LOCKING, HE M6 X 1	1
22	PAOZZ	81343	10-8-070320C	ELBOW, TUBE TO BOSS	1
23	PAOZZ	96906	MS28778-8	.O-RING	1
24	PAOZZ	19207	12414555-001	TUBE ASSEMBLY, METAL	1
25	PAOZZ	25281	026S9	CLAMP, HOSE	4
26	PAOZZ	16632	FLX5500-0011	HOSE, NONMETALLIC	1
27	PAOZZ	19207	12414449-001	TUBE ASSEMBLY, METAL	1
28	PAOZZ	19204	8442242	ELBOW, PIPE TO TUBE	1
29	PAOZZ	98660	AC1000-8-8CAD	ADAPTER, STRAIGHT, PI	1
30	PAOZZ	19207	12414450-001	TUBE ASSEMBLY, METAL	1
31	PAOZZ	19207	12414463-001	TUBE, BENT, METALLIC	1
32	PAOZZ	88044	AN840-4	ADAPTER, STRAIGHT, PI	1
33	PAOZZ	81343	6-2 140140C	REDUCER, PIPE	1
34	PAOZZ	81343	6-6 140424C	TEE, PIPE	1
35	PAOZZ	81343	8-6 130140C	BUSHING PIPE	1
36	PAOZZ	96906	MS521500A10	ADAPTER, STRAIGHT, PI	1
37	PAOZZ	19207	12414554-001	TUBE ASSEMBLY, METAL	1
38	PAOZZ	16632	FLX5500-0010	HOSE, NONMETALLIC	1

END OF FIGURE

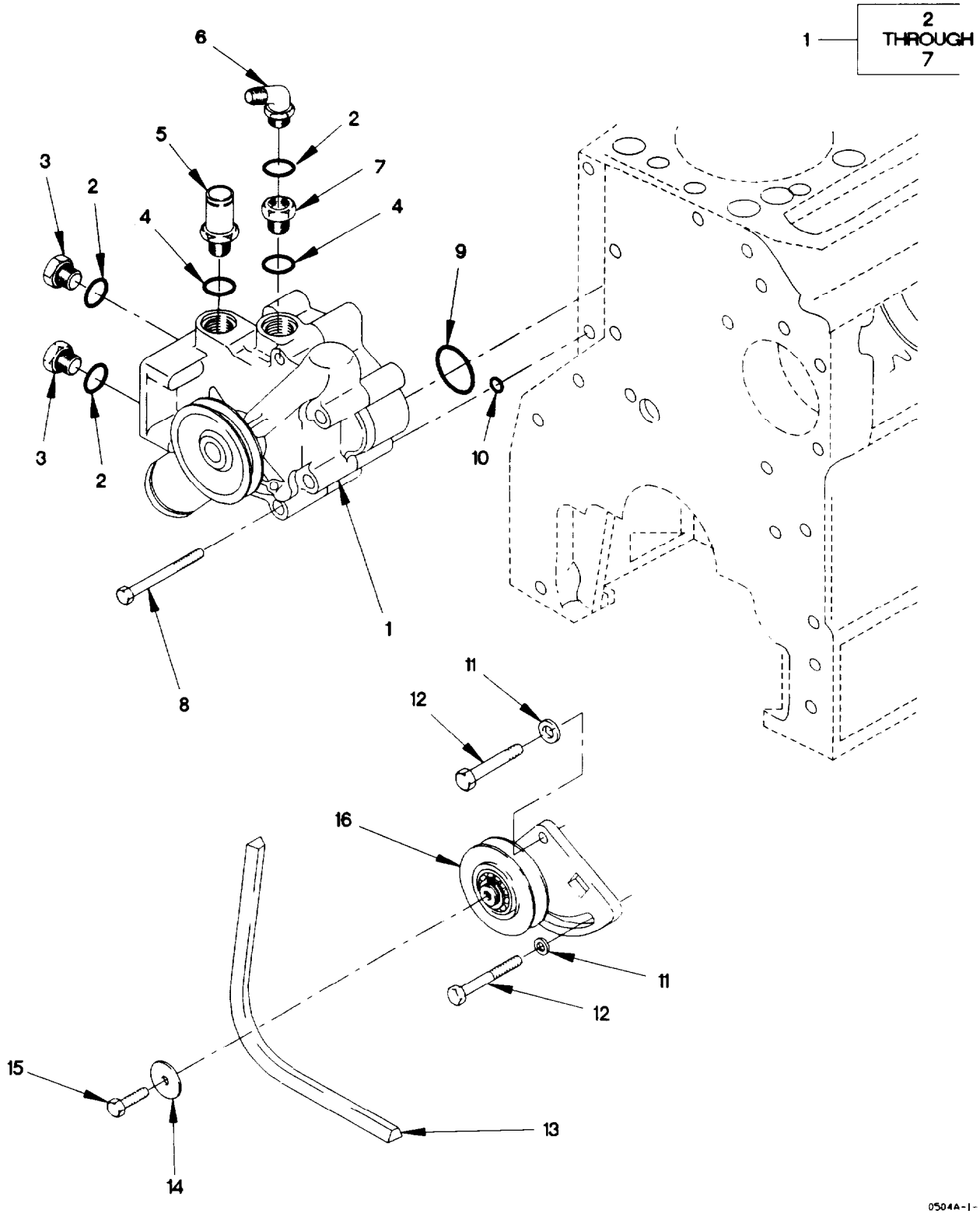

Figure 44. Water Pump and Drive

(1) ITEM NO	(2) SMR CODE	(3) FSCM	(4) PART NUMBER	(5) DESCRIPTION AND USABLE ON CODE (UOC)	(6) QTY
				GROUP 0504: WATER PUMP	
				FIG. 44 WATER PUMP AND DRIVE	
1	PAOZZ	11083	5R9022	PUMP, COOLING SYSTEM	1
2	PAOZZ	11083	3K0360	.O-RING	3
3	PAOZZ	19207	11621436-3	.PLUG, MACHINE THREAD	2
4	PAOZZ	11083	3D2824	.O-RING	2
5	PAOZZ	11083	3R6790	.ADAPTER, STRAIGHT, PI	1
6	PAOZZ	96906	MS51527A8	.ELBOW, TUBE TO BOSS	1
7	PAOZZ	11083	6V1722	.BUSHING, PIPE	1
8	PAFZZ	11083	8T0644	SCREW, CAP, HEXAGON H M10 X 1.5 X 90	4
9	PAFZZ	96906	MS9021-225	O-RING PART OF KIT P/N 7X2528	1
10	PAOZZ	11083	2M4453	O-RING PART OF KIT P/N 7X2528	1
11	PAOZZ	11083	3E4352	WASHER, FLAT	2
12	PAOZZ	11083	6V2317	BOLT, MACHINE M8 X 1.25 X 30	2
13	PAOZZ	11083	061-8384	BELT, V	1
14	PAOZZ	11083	4F3714	WASHER, FLAT	1
15	PAOZZ	11083	6V5215	SCREW, CAP, HEXAGON H M8 X 1.25 X 16	1
16	PAOZZ	11083	115-4204	PULLEY, GROOVE	1
				END OF FIGURE	

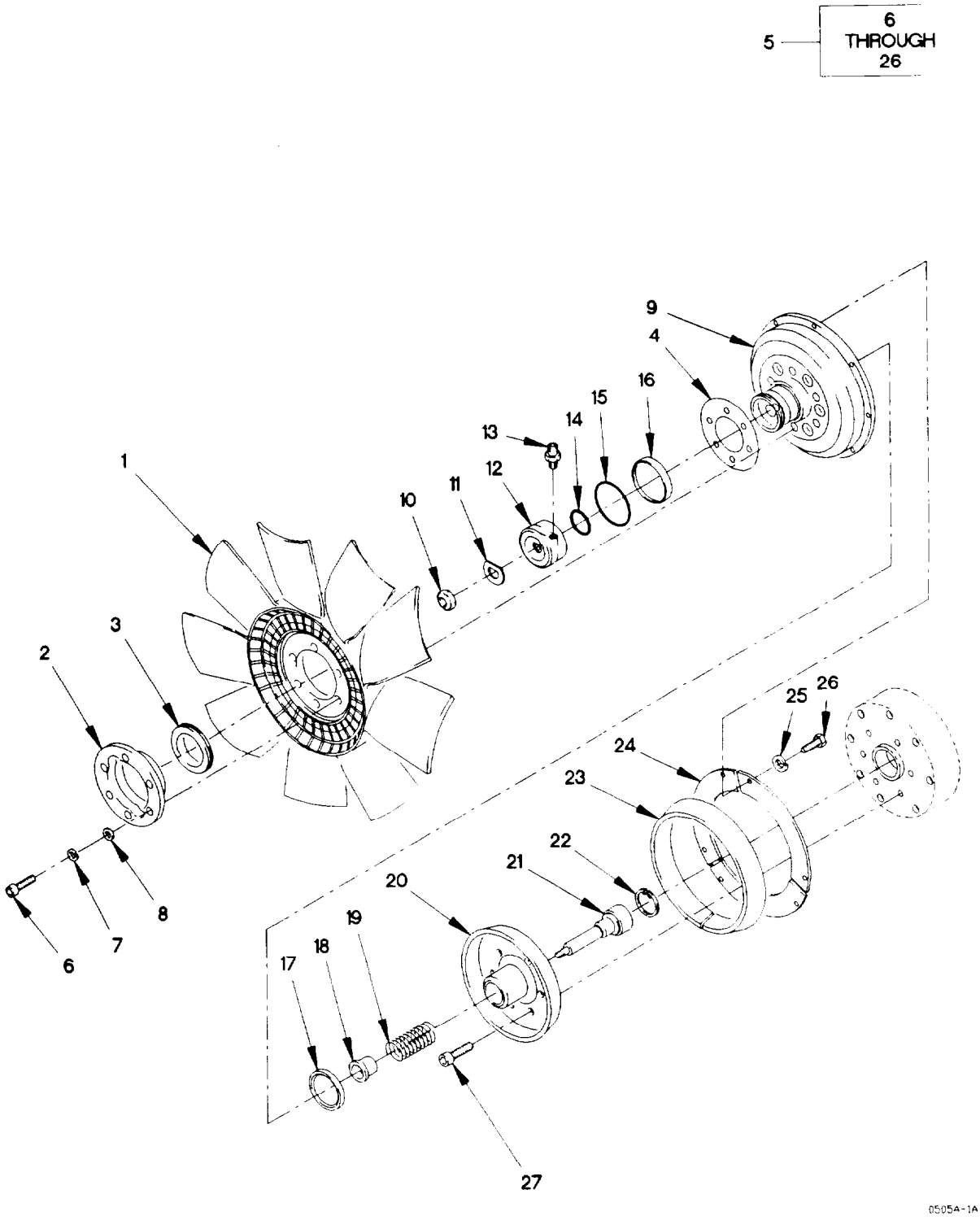

Figure 45. Engine Fan and Clutch Assembly

(1) ITEM NO	(2) SMR CODE	(3) FSCM	(4) PART NUMBER	(5) DESCRIPTION AND USABLE ON CODE (UOC)	(6) QTY
				GROUP 0505: FAN ASSEMBLY FIG. 45 ENGINE FAN AND CLUTCH ASSEMBLY	
1	PAOZZ	51377	4035-41393-74	CLUTCH, FAN, ENGINE	1
1	PAOZZ	0FW39	12421972	FAN, CENTRIFUGAL USED WITH FAN CLUTCH 1090-08000-01 ONLY	1
2	PGOZZ	51377	4038-37641-01	PLATE, RETAINING, SHA USED ON P/N 1090-08000-03	1
3	PAOZZ	51377	4082-37634-01	GROMMET, NONMETALLIC USED ON P/N 1090-08000-03	1
4	PAOZZ	51377	4038-38806-01	SPACER, PLATE USED ON P/N 1090-08000-03	1
5	PFOFF	51377	1090-08000-03	CLUTCH, FAN, ENGINE	1
5	PAOZZ	75418	1090-08000-01	CLUTCH, FAN, ENGINE USED WITH FAN 12421972 ONLY	1
6	PAOZZ	96906	MS16998-61L	.SCREW, SELF-LOCKING 5/16-24 X 1 1/2	6
7	PAOZZ	96906	MS35338-45	.WASHER, LOCK 5/16	6
8	PAOZZ	75418	3058-00843-06	.WASHER, FLAT 5/16	6
9	XAFZZ	75418	4040-41131-01	.HOUSING ASSY USED ON CLUTCH P/N 1090-08000-01	1
9	XAFZZ	75418	4040-41131-02	.HOUSING ASSY USED ON CLUTCH P/N 1090-08000-03	1
10	PAFZZ	51377	3029-01371-01	.NUT, SELF-LOCKING, HE	1
11	PAFZZ	51377	3058-01264-02	.WASHER, FLAT	1
12	PAFZZ	75418	4043-41130-01	.CYLINDER, FAN CLUTCH	1
13	PAOZZ	30327	48F1-8 1-4	.ADAPTER, STRAIGHT, PI	1
14	PAFZZ	51377	9002-00741-58	.O-RING	1
15	PAFZZ	51377	9002-00491-68	.O-RING	1
16	PAFZZ	75418	3018-01519-01	.SEAL, PLAIN	1
17	PAFZZ	75418	3018-01507-01	.SEAL, PLAIN	1
18	PAFZZ	75418	4001-40690-01	.BUSHING BLANK	1
19	PAFZZ	75418	4088-40615-01	.SPRING, HELICAL, COMP	1
20	PAFZZ	75418	4079-41132-01	.CLUTCH, POSITIVE	1
21	PAFZZ	75418	4079-41133-01	.SHAFT, SHOULDERED	1
22	PAFZZ	75418	3038-01510-01	.RING, RETAINING	1
23	PAFZZ	51377	4026-36900-01	.LINING, FRICTION	1
24	PAFZZ	75418	4073-38444-01	.PLATE, MOUNTING	3
25	PAFZZ	75418	3059-00870-03	.WASHER, LOCK 10	6
26	PAFZZ	96906	MS16996-10	.SCREW, CAP, SOCKET HE 10-32 X 1/2	6
27	PAOZZ	75755	19M7662	SCREW, CAP, HEXAGON H M10 X 1.5 X 30	6
				END OF FIGURE	

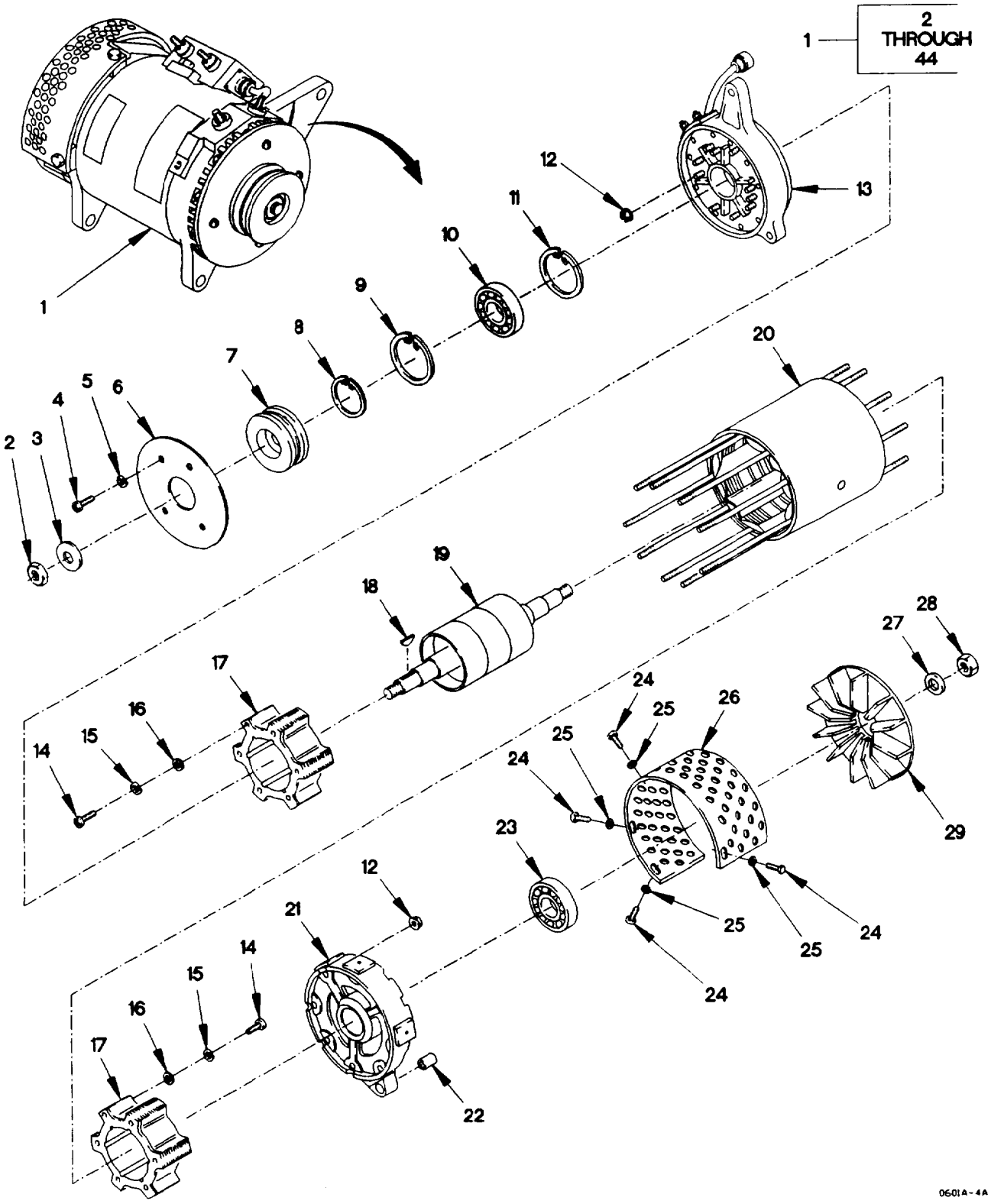

Figure 46. 100 AMP Alternator and Regulator (Sheet 1 of 3)

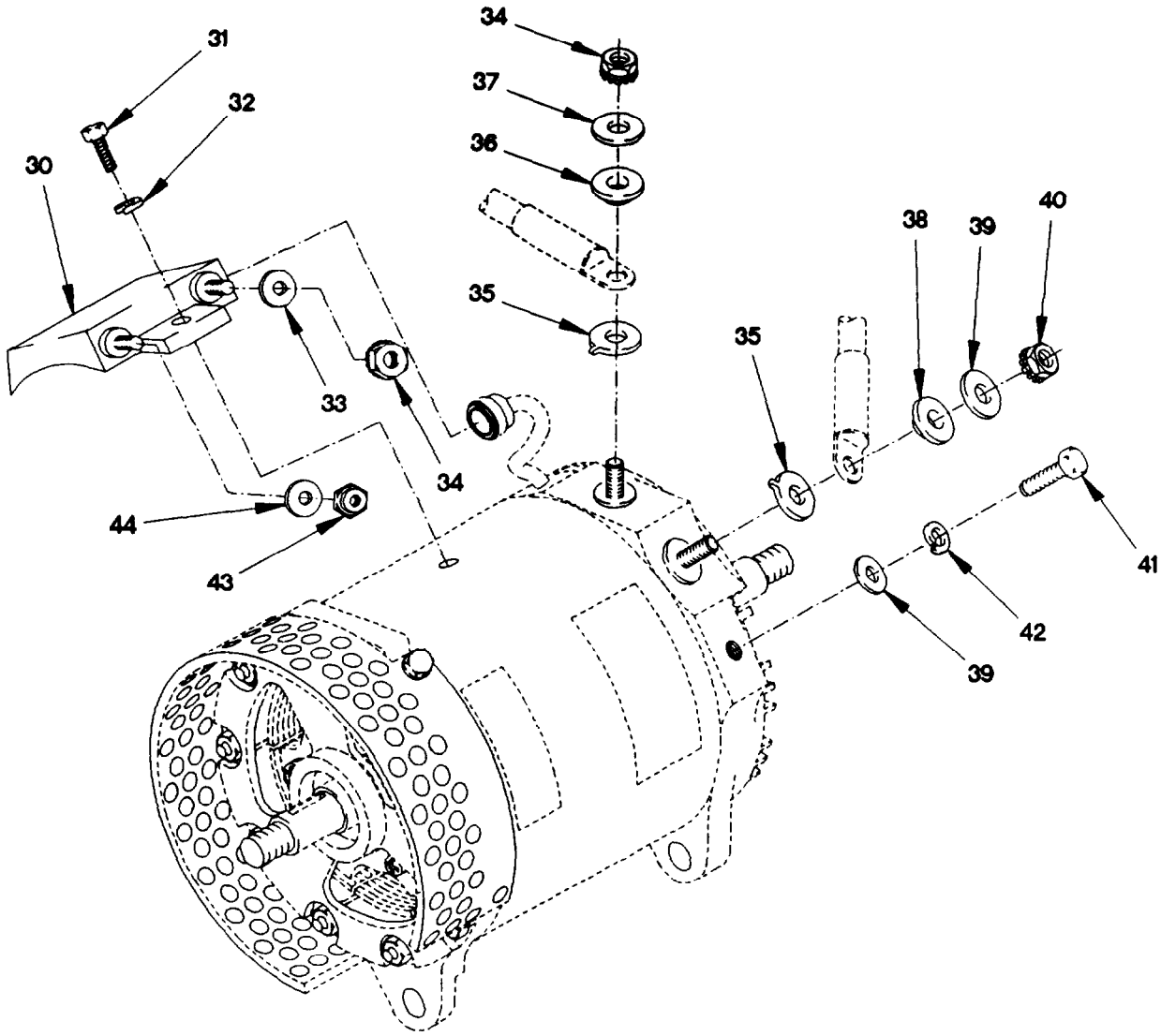

Figure 46. 100 AMP Alternator and Regulator (Sheet 2 of 3)

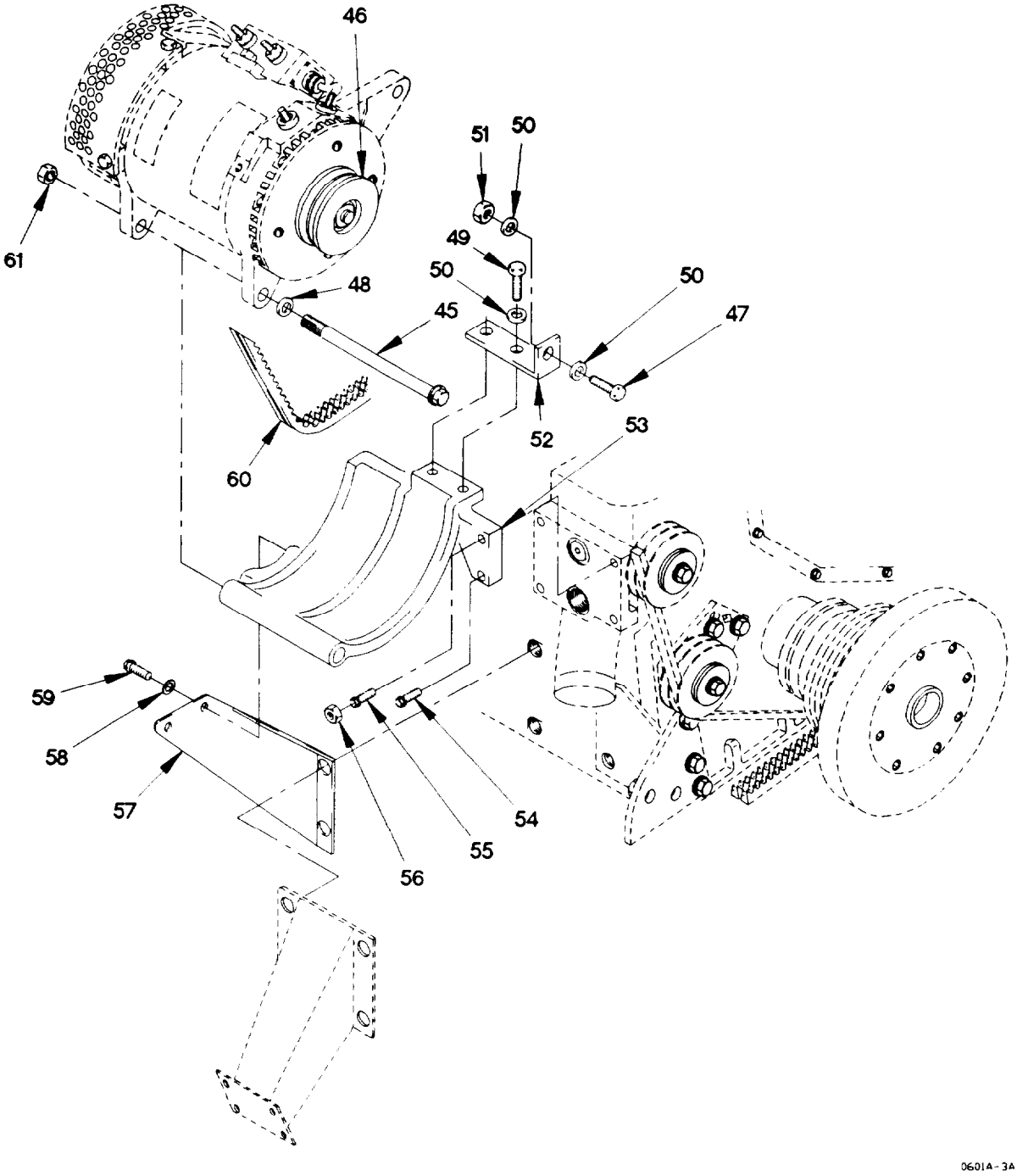

Figure 46. 100 AMP Alternator and Regulator (Sheet 3 of 3)

(1) ITEM NO	(2) SMR CODE	(3) FSCM	(4) PART NUMBER	(5) DESCRIPTION AND USABLE ON CODE (UOC)	(6) QTY
				GROUP 0601: GENERATOR, ALTERNATOR FIG. 46 100 AMP ALTERNATOR AND REGULATOR	
1	PAOFF	76761	N1506-1	GENERATOR, ALTERNATI	1
2	PAFZZ	76761	N9416	.NUT, SELF-LOCKING, HE	1
3	PAFZZ	76761	N9393	.WASHER, FLAT	1
4	PAFZZ	76761	N9005	.SCREW, MACHINE 8-32 X 3/8	4
5	PAFZZ	76761	N9265	.WASHER, LOCK 8	4
6	PAFZZ	76761	N9493	.COVER, ACCESS	1
7	PAFZZ	76761	N9492	.BEARING, SLEEVE	1
8	PAFZZ	76761	N9260	.RING, RETAINING	1
9	PAFZZ	76761	N9494	.RING, RETAINING	1
10	PAFZZ	76761	N9486	.BEARING UNIT, BALL	1
11	PAFZZ	76761	N9256	.RING, RETAINING	1
12	PAFZZ	76761	N9099	.NUT, SELF-LOCKING, EX	18
13	PAFFF	76761	N7427	.COVER, ACCESS	1
14	PAFZZ	96906	MS51958-63	.SCREW, MACHINE 10-32 X 1/2	12
15	PAFZZ	76161	N9018	.WASHER, SPRING TENSI	12
16	PAFZZ	76161	N9016	.WASHER, FLAT 3/16	12
17	PAFZZ	76161	N7431	.STATOR, GENERATOR	2
18	PAFZZ	76161	N9451	.KEY, WOODRUFF	1
19	PAFZZ	76161	N7429	.ROTOR ASSEMBLY	1
20	PAFZZ	76161	N7428	.COIL, ELECTRICAL	1
21	PAFZZ	76161	N7401	.END BELL, ELECTRICAL	1
22	PAFZZ	76161	N9545	.BUSHING, SLEEVE	1
23	PAFZZ	76161	N9385	.BEARING, BALL, ANNULA	1
24	PAFZZ	76161	N9495	.BOLT, MACHINE	4
25	PAFZZ	76161	N9338	.WASHER, FLAT	4
26	PAFZZ	76161	N9558	.GUARD, FAN IMPELLER	1
27	PAFZZ	76161	N9063	.WASHER, FLAT	1
28	PAFZZ	19207	11649930	.NUT, SELF-LOCKNG, HE 1/2-20	1
29	PAFZZ	76761	N9491	.IMPELLER, FAN, CENTRI	1
30	PAOZZ	76761	N3030	.REGULATOR ASSEMBLY	1
31	PAOZZ	76761	N9553	.SCREW, CAP, HEXAGON H	2
32	PAOZZ	76761	N9459	.WASHER, LOCK	2
33	PAOZZ	13499	500-1114-003	.WASHER, FLAT 17/64	1
34	PAOZZ	76761	N9410	.NUT, PLAIN, OCTAGON	1
35	PAOZZ	76761	N9555	.FUSE, OPEN LINK	2
36	PAOZZ	76761	N9557	.WASHER, SHOULDERED (24V OUTPUT STUD)	1
37	PAOZZ	76761	N9455	.WASHER, FLAT	1
38	PAOZZ	76761	N9554	.WASHER, SHOULDERED (12V OUTPUT STUD)	1
39	PAOZZ	76761	N9062	.WASHER, FLAT	2
40	PAOZZ	76761	N9556	.NUT, PLAIN, HEXAGON	1
41	PAOZZ	76761	N9498	.BOLT, MACHINE	1
42	PAOZZ	76761	N9015	.WASHER, LOCK 5/16	1
43	PAOZZ	76761	N9467	.NUT, PLAIN, CAP	1

(1) ITEM NO	(2) SMR CODE	(3) FSCM	(4) PART NUMBER	(5) DESCRIPTION AND USABLE ON CODE (UOC)	(6) QTY
44	PAOZZ	76761	N9465	.WASHER, FLAT	1
45	PAOZZ	24995	09288	SCREW, CAP, HEXAGON H	1
46	PAOZZ	19207	12421165	PULLEY, GROOVE	1
47	PAOZZ	19207	12417958-009	BOLT, MACHINE M8 X 1 X 40	1
48	PAOZZ	21969	A 13 DIN125-ST	WASHER, FLAT M13	1
49	PAOZZ	15526	933-M8X20	SCREW, CAP, HEXAGON H M8 X 1.25 X20	2
50	PAOZZ	34914	990 3861	WASHER, FLAT M8.4	3
51	PAOZZ	1FH08	DIN555M8	NUT, PLAIN, HEXAGON M8 X 1.25	1
52	PAOZZ	19207	12414341-001	BRACKET, ANGLE	1
53	PAOZZ	0FW39	12414306-001	BRACKET, VEHICULAR C	1
54	PAOZZ	05523	42051-14	SCREW, CAP, HEXAGON H M8 X 1.25 X 14	3
55	PAOZZ	19207	12414576-169	STUD, PLAIN	1
56	PAOZZ	19207	12414315-006	NUT, SELF-LOCKING, HE M8 X 1.25	1
57	PAOZZ	19207	12414337	BRACKET, ENGINE ACCE	1
58	PAOZZ	19207	12414473-016	WASHER, FLAT M15	2
59	PAOZZ	19207	12414566-001	SCREW, CAP, HEXAGON H M14 X 2 X 35	2
60	PAOZZ	24161	9580	BELT, V	1
61	PAOZZ	19207	12414308-007	NUT, SELF-LOCKING, HE M12 X 1.5	1

END OF FIGURE

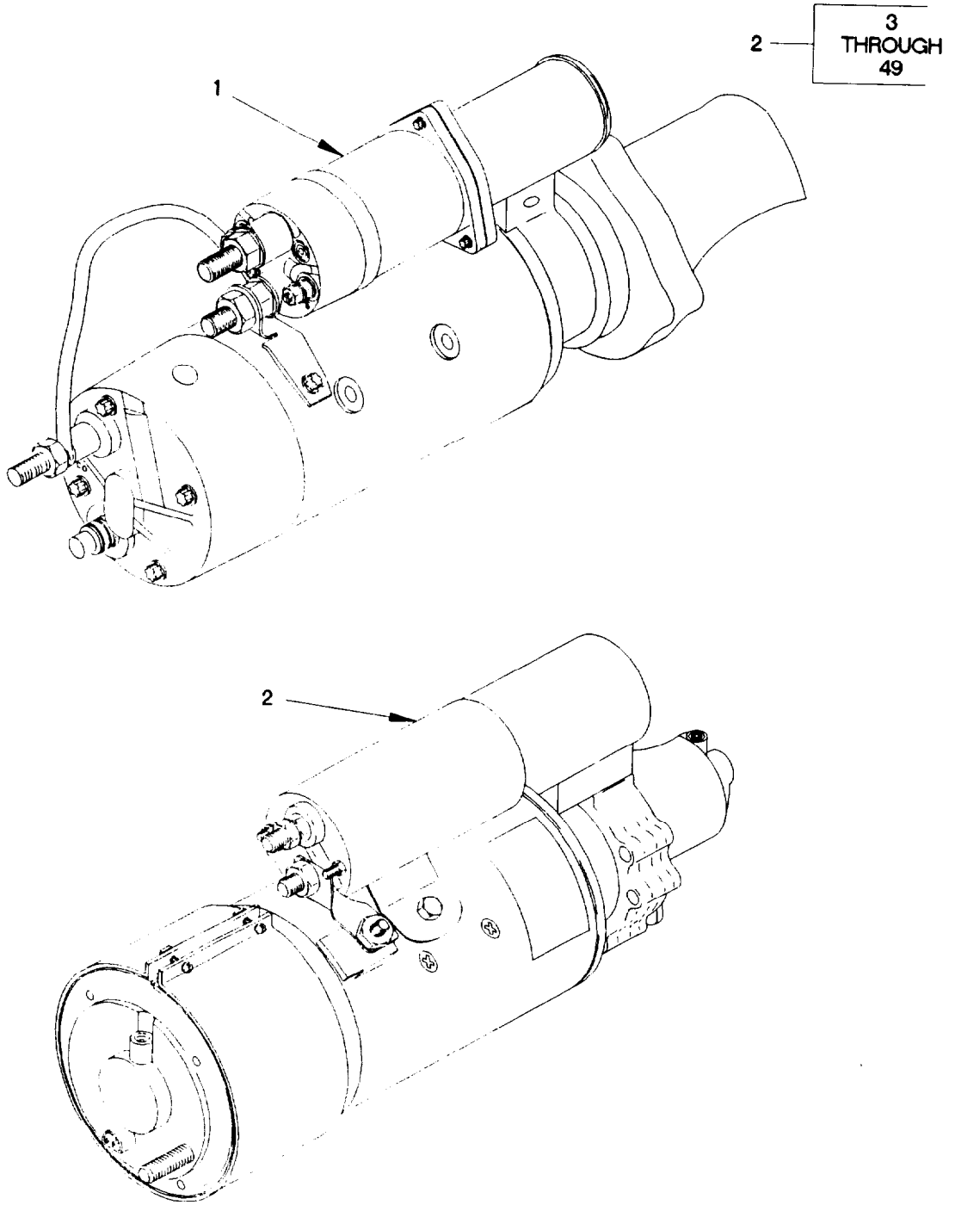

0603Y-1A

Figure 47. Starting Motor and Solenoid (Sheet 1 of 2)

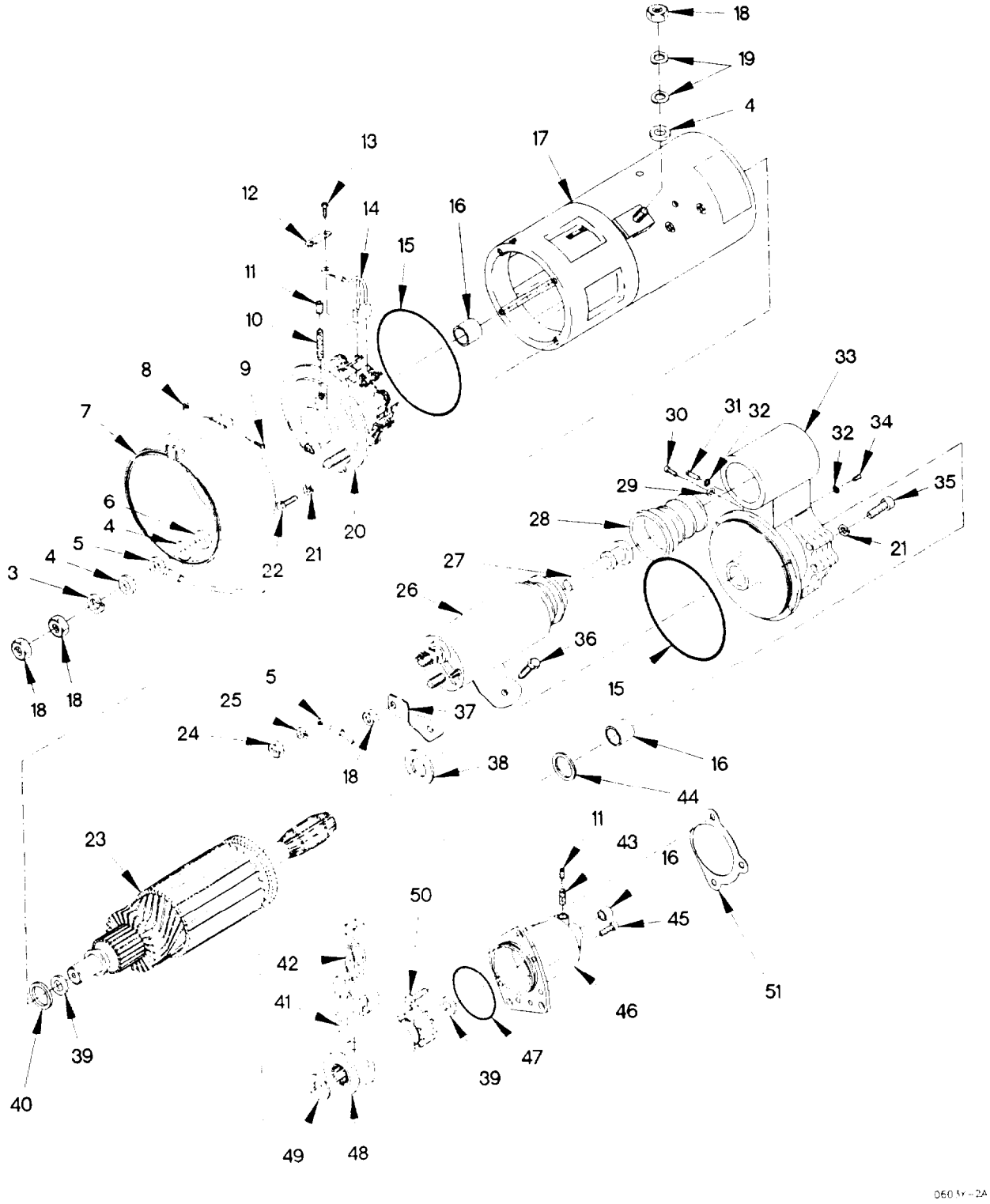

Figure 47. Starting Motor and Solenoid (Sheet 2 of 2)

(1) ITEM NO	(2) SMR CODE	(3) FSCM	(4) PART NUMBER	(5) DESCRIPTION AND USABLE ON CODE (UOC)	(6) QTY
				GROUP 0603: STARTING MOTOR	
				FIG. 47 STARTING MOTOR AND SOLENOID	
1	XDOFF	16764	1993991	STARTER, ENGINE, ELEC	1
2	PAOFF	35510	M0017703MD	STARTER, ENGINE, ELEC	1
3	PAFZZ	35510	Z0930-78423	.WASHER, LOCK 1/2	1
4	PAFZZ	35510	3249	.WASHER, FLAT 1/2	3
5	PAFZZ	35510	225087	.LEAD, ELECTRICAL	1
6	PAFZZ	35510	95770	.INSULATOR, BUSHING	1
7	PAFZZ	35510	78494	.COVER, ACCESS	1
8	PAFZZ	35510	5955	.NUT, PLAIN, SQUARE #10 - 24	2
9	PAFZZ	35510	3966	.SCREW, MACHINE 10-24 X 7/8	2
10	PAFZZ	35510	38406	.WICK	1
11	PAFZZ	24617	444688	.PLUG, PIPE	2
12	PAFZZ	35510	57022	.PLATE, LOCK	4
13	PAFZZ	96906	MS35206-243	.SCREW, MACHINE 8-32 X 3/8	8
14	PAFZZ	35510	M010071035	.BRUSH SET, ELECTRICA SET OF 8 EA	1
15	PAFZZ	35510	74980	.O-RING	2
16	PAFZZ	19207	5702711	.BEARING SET, SLEEVE	3
17	PAFZZ	35510	78433	.HOUSING, ELECTRICAL	1
18	PAOZZ	35510	73450S	.NUT, PLAIN, HEXAGON 1/2-13	4
19	PAOZZ	35510	75777	.WASHER, SPRING TENSI 1/2	2
20	XAFZZ	35510	M012225340	.HOUSING	1
21	PAFZZ	35510	2523	.WASHER, LOCK 1/4	9
22	PAFZZ	96906	MS90725-6	.SCREW, CAP, HEXAGON H 1/4 -20 X 3/4	4
23	PAFZZ	35510	M002071025	.ARMATURE, MOTOR	1
24	PAFZZ	35510	2313	.NUT 10-32	1
25	PAFZZ	35510	2434	.WASHER, LOCK #10	4
26	KFFZZ	35510	78354	.SOLENOID PART OF KIT P/N 5705042	1
27	PAFZZ	35510	95656	.LINK, SPOOL	1
28	PAFZZ	35510	95146	.BOOT, VEHICULAR COMP PART OF KIT P/N 5705042	1
29	PAFZZ	35510	77481	.WASHER, FLAT 1/4	1
30	PAFZZ	35510	73650	.SCREW, CAP, SOCKET HE 10-32 X 3/8	1
31	PAFZZ	35510	73587	.PIN, SHOULDER, HEADLE	1
32	PAFZZ	35510	Z053-074979	.O-RING	2
33	XAFZZ	35510	225322S	.SHIFT HOUSING, START	1
34	PAFZZ	35510	60263	.PLUG, PIPE	1
35	PAFZZ	35510	31757	.SCREW, CAP, SOCKET HE 1/4-20 X 1	5
36	PAFZZ	35510	73503	.SCREW 3/8-16 X 3/8	2
37	PAFZZ	35510	78138	.JUMPER, STARTING MOT	1
38	PAFZZ	35510	36900	.WASHER 10	2
39	PAFZZ	35510	Z095077721	.BEARING, WASHER, THRU	2
40	PAFZZ	35510	73500	.BEARING, BALL, ANNULA	1
41	PAFZZ	35510	79144	.ARM, CAM LEVER BRASS	2
42	PAFZZ	35510	97439	.SHIFTER FORK	1

(1) ITEM NO	(2) SMR CODE	(3) FSCM	(4) PART NUMBER	(5) DESCRIPTION AND USABLE ON CODE (UOC)	(6) QTY
43	PAFZZ	35510	99278	.WICK	1
44	PAFZZ	35510	97799	.SEAL, PLAIN ENCASED	1
45	PAFZZ	35510	73502	.SCREW, CAP, SOCKET HE 5/16-18 X 3/4	6
46	XAFZZ	35510	M014225337	.HOUSING, NOSE	1
47	PAFZZ	81349	M83248/1-906	.PACKING, PREFORMED	1
48	KFFZZ	35510	75249	.DRIVE, ENGINE, ELECTR	1
49	KFFZZ	35510	78302	.WASHER, FLAT 10	1
50	PAOZZ	19207	12414307-065	BOLT, MACHINE M10 X 1.5 X 35	3
51	PAOZZ	11083	3K3257	SEAL PART OF KIT P/N 7X2525	1

END OF FIGURE

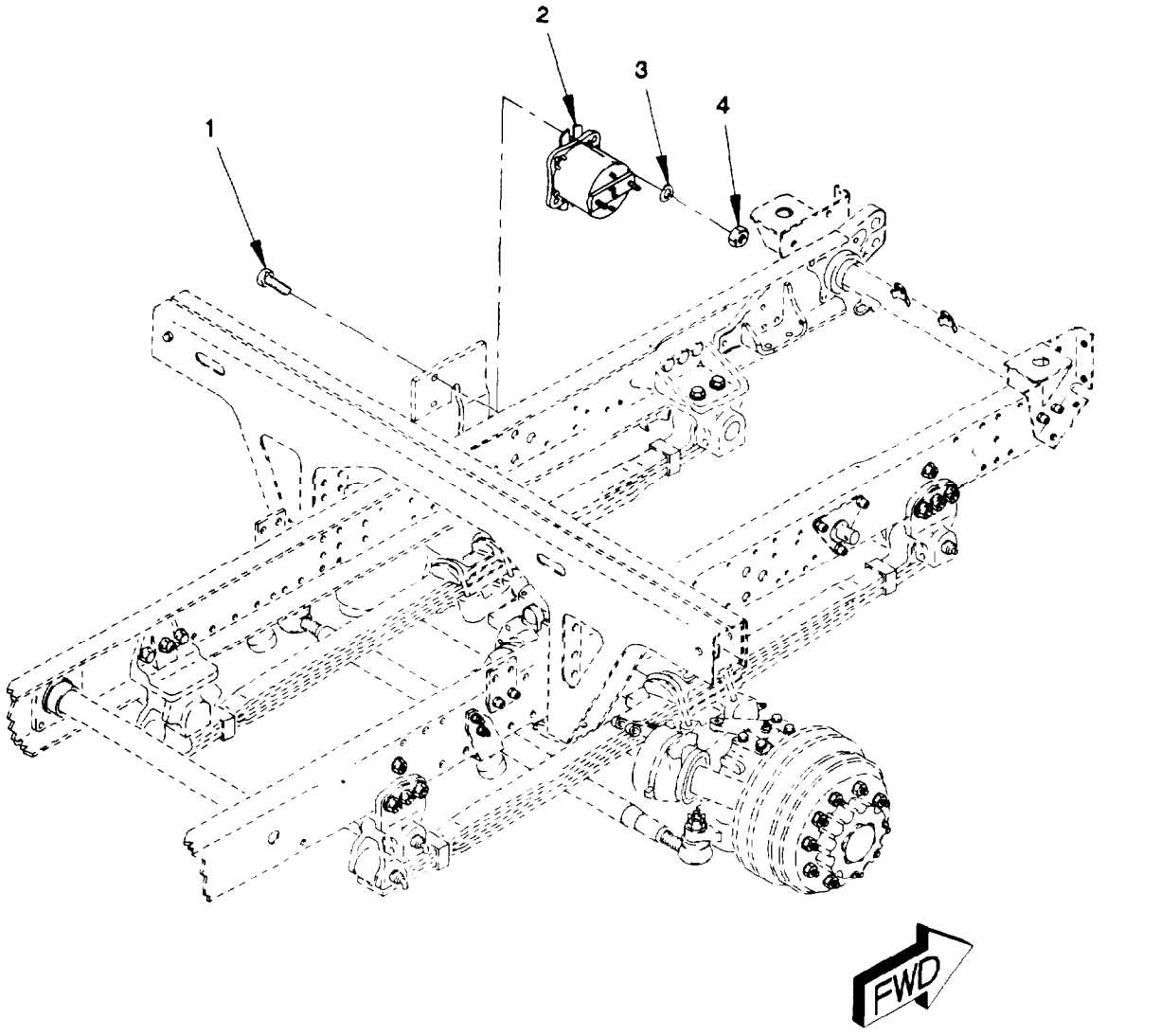

0613FM1-

Figure 48. Auxiliary Starter Solenoid

(1) ITEM NO	(2) SMR CODE	(3) FSCM	(4) PART NUMBER	(5) DESCRIPTION AND USABLE ON CODE (UOC)	(6) QTY
				GROUP 0603: STARTING MOTOR FIG. 48 AUXILIARY STARTER SOLENOID	
1	PAOZZ	56161	10503805	SCREW, CAP, HEXAGON H M6 X 1 X 20	2
2	PAOZZ	68505	SBC-4401E-1	RELAY-SOLENOID, ENGI	1
3	PAOZZ	19207	12417975-006	SPACER, RING	2
4	PAOZZ	15526	DIN 934 ST M6	NUT, SELF-LOCKING, HE M6 X 1	2

END OF FIGURE

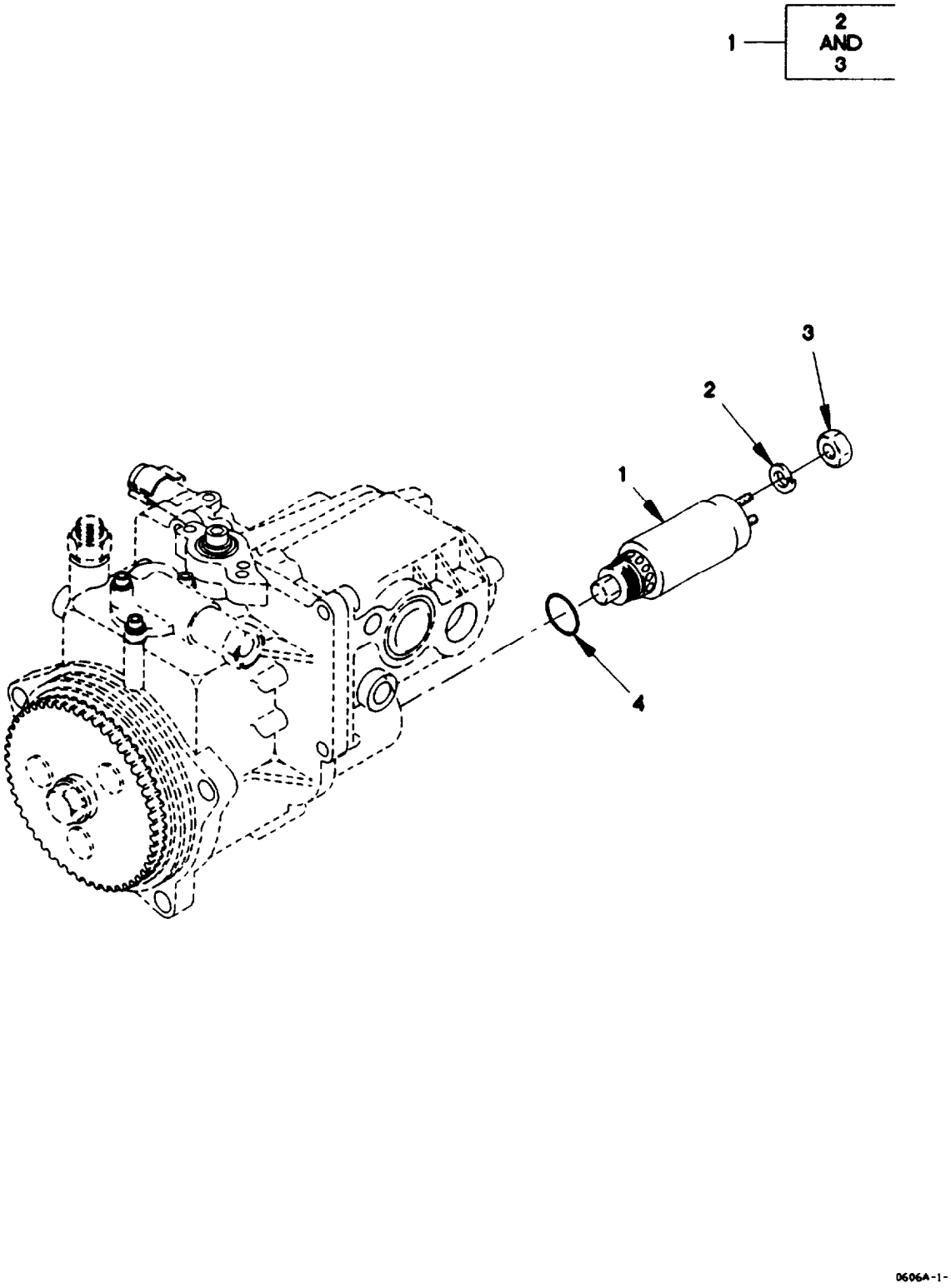

Figure 49. Fuel Shutoff Solenoid

(1) ITEM NO	(2) SMR CODE	(3) FSCM	(4) PART NUMBER	(5) DESCRIPTION AND USABLE ON CODE (UOC)	(6) QTY
				GROUP 0606: ENGINE SAFETY CONTROLS	
				FIG. 49 FUEL SHUTOFF SOLENOID	
1	PAFZZ	11083	3E0268	SOLENOID ASSEMBLY	1
2	PAFZZ	11083	9B7233	.WASHER, LOCK 8	2
3	PAFZZ	11083	6V8377	.NUT, PLAIN, HEXAGON 8-32	2
4	PAFZZ	11083	4K1388	SEAL, CONNECTOR TUBE	1

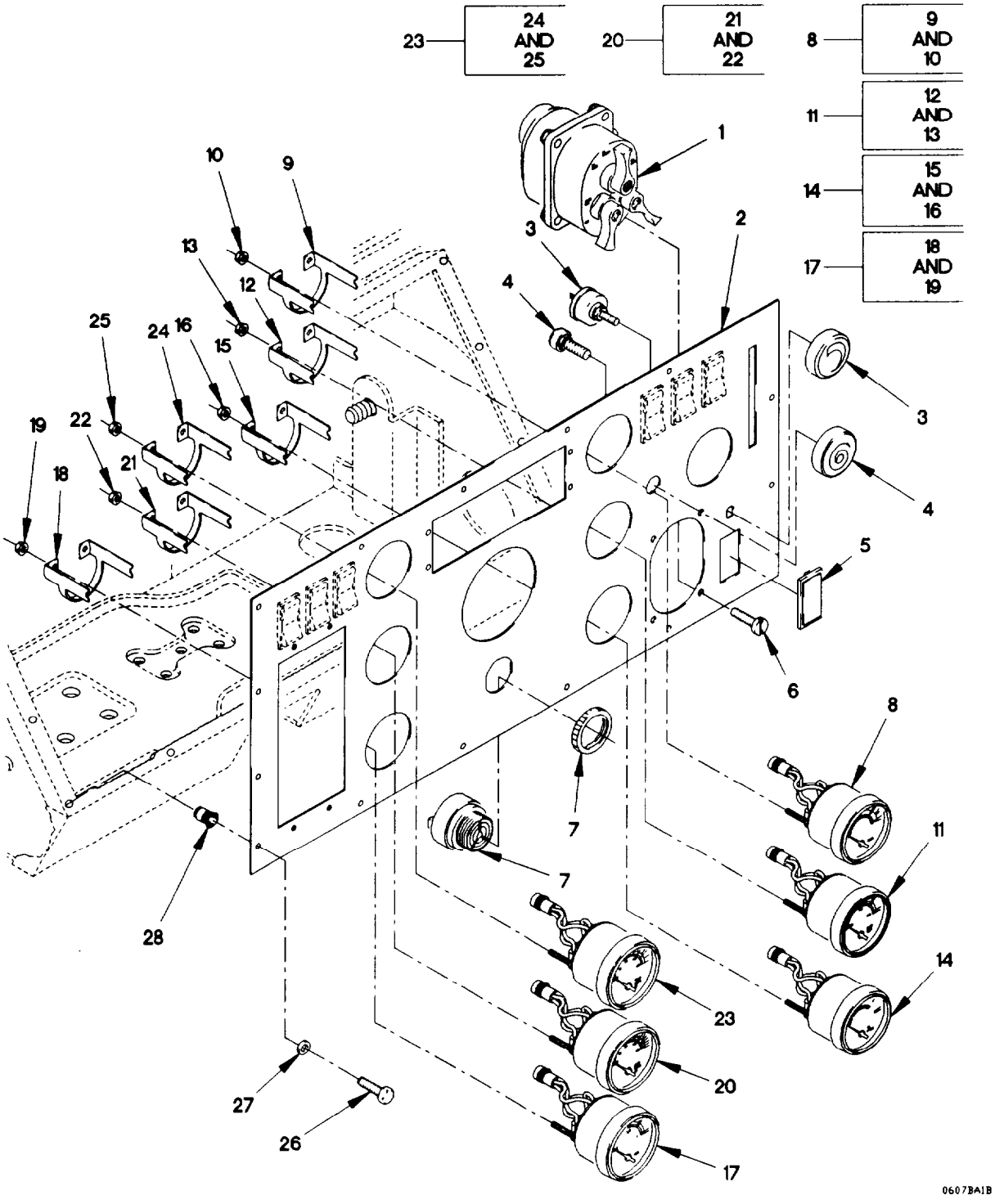

Figure 50. Instrument Panel (Sheet 1 of 4)

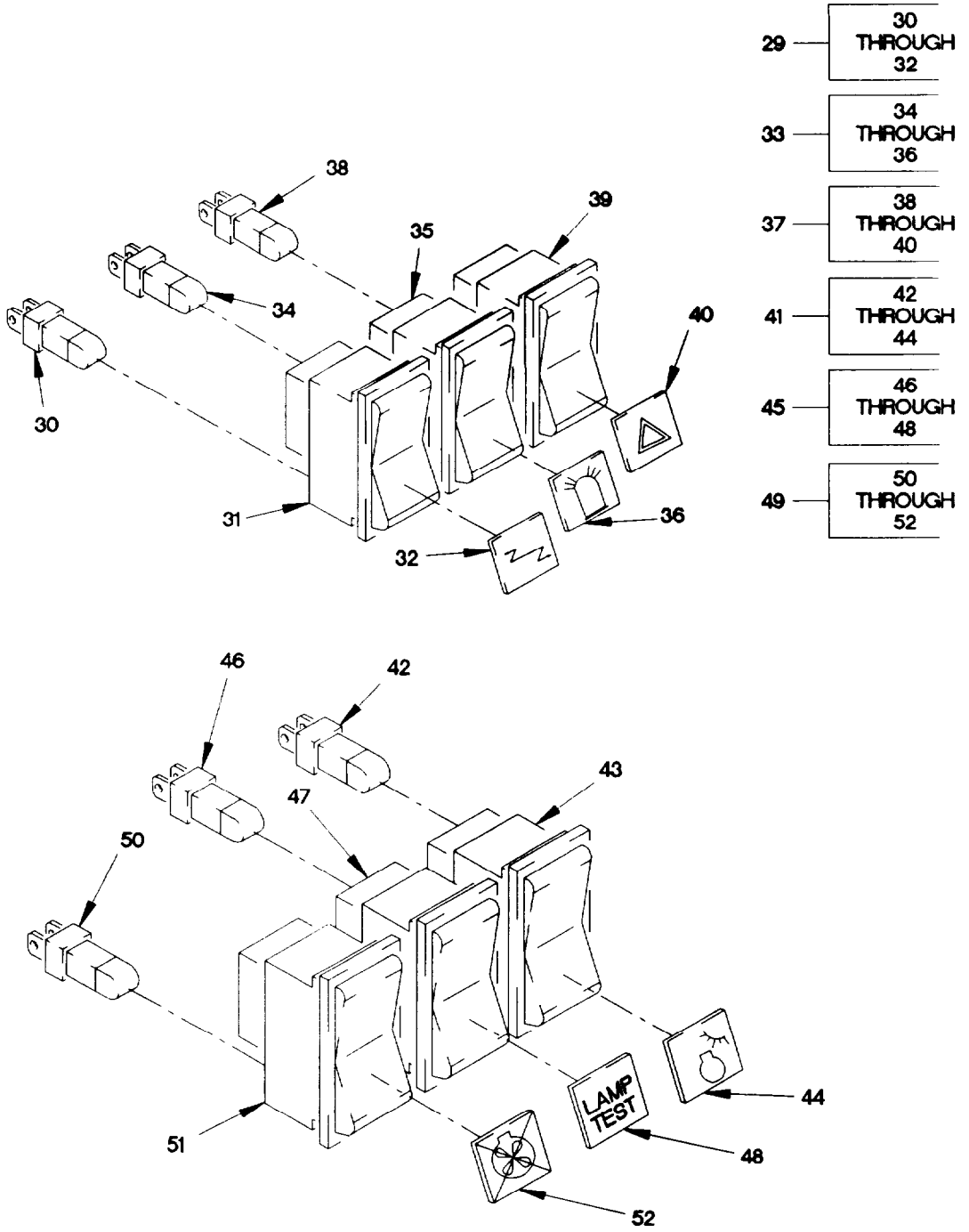

Figure 50. Instrument Panel (Sheet 2 of 4)

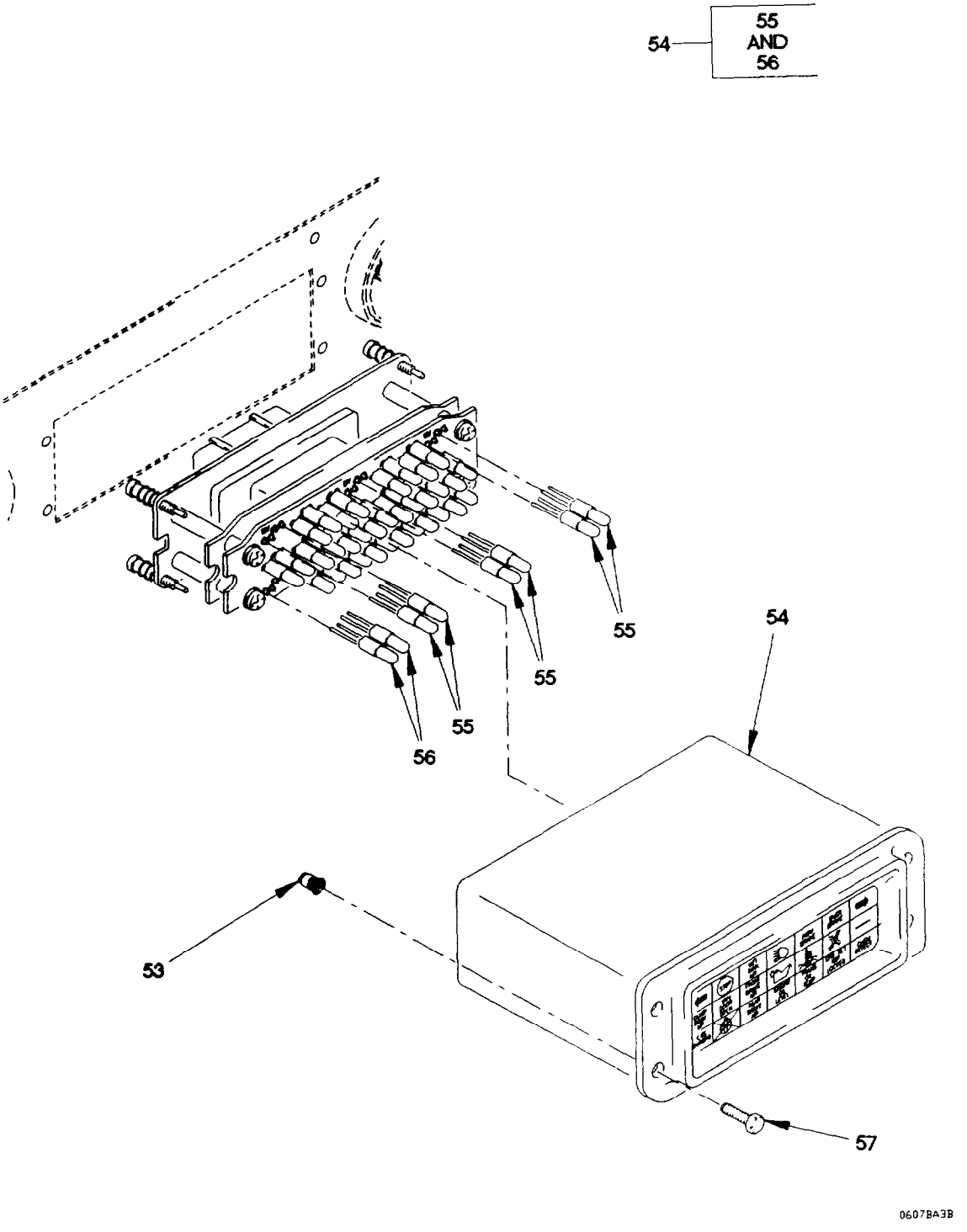

Figure 50. Instrument Panel (Sheet 3 of 4)

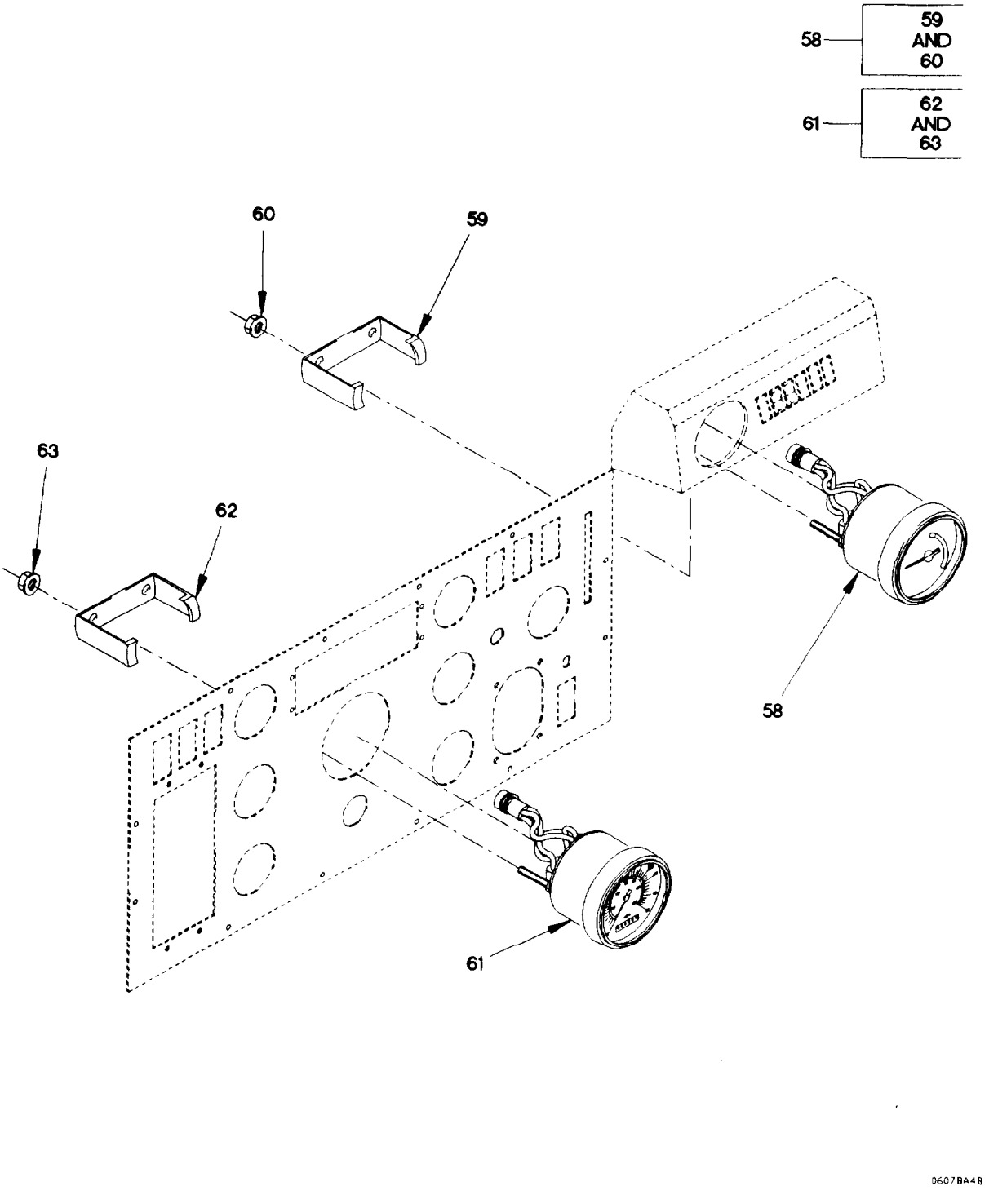

Figure 50. Instrument Panel (Sheet 4 of 4)

(1) ITEM NO	(2) SMR CODE	(3) FSCM	(4) PART NUMBER	(5) DESCRIPTION AND USABLE ON CODE (UOC)	(6) QTY
				GROUP 0607: INSTRUMENT OR ENGINE CONTROL PANEL	
				FIG. 50 INSTRUMENT PANEL	
1	PAOZZ	96906	MS51113-1	SWTICH ASSEMBLY	1
2	PAOZZ	0FW39	12378442	PANEL, VEHICULAR OPE (WITH MOUNTING HOLES FOR SHIFT SELECTOR)	1
2	PAOZZ	0FW39	12378442-001	PANEL, VEHICULAR OPE WITHOUT MOUNTING HOLES FOR SHIFT SELECTOR	1
3	PAOZZ	13445	74601-01	RESISTOR, VARIABLE, N	1
4	PAOZZ	216499	P3-90108	SWITCH, PUSH	1
5	PAOZZ	45152	1588570	COVER, ELECTRICAL SW	2
6	PAOZZ	96909	MS51849-66	SCREW, MACHINE #10-32 X 3/4	4
7	PAOZZ	56493	SP-610-B	BUZZER	1
8	PAOZZ	32171	EN61650-6SS	GAGE, PRESSURE, DIAL OIL PRESSURE	1
9	XAOZZ	32171	B-3926-1	.U-BRACKET, GAUGE	1
10	PAOZZ	96906	MS21083N08	.NUT, SELF-LOCKING, HE #8-32	2
11	PAOZZ	32171	EM7175-3	VOLTMETER	1
12	XAOZZ	32171	B-3926-1	.U-BRACKET, GAUGE	1
13	PAOZZ	96906	MS21083N08	.NUT, SELF-LOCKING, HE #8-32	2
14	PAOZZ	32171	EM7175-11SS	INDICATOR, LIQUID QU	1
15	XAOZZ	32171	B-3926-1	.U-BRACKET, GAUGE	1
16	PAOZZ	96906	MS21083N08	.NUT, SELF-LOCKING, HE #8-32	2
17	PAOZZ	19207	12378796	METER, SPECIAL SCALE	1
18	XAOZZ	32171	B-3926-1	.U-BRACKET, GAUGE	1
19	PAOZZ	96906	MS21083N08	.NUT, SELF-LOCKING, HE #8-32	2
20	PAOZZ	0FW39	12378798-002	GAGE, PRESSURE, DIAL	1
21	XAOZZ	32171	B-3926-1	.U-BRACKET, GAUGE	1
22	PAOZZ	96906	MS21083N08	.NUT, SELF-LOCKING, HE #8-32	2
23	PAOZZ	32171	EM7175-4	GAGE, PRESSURE, DIAL	1
24	XAOZZ	32171	B-3926-1	.U-BRACKET, GAUGE	1
25	PAOZZ	96906	M21083N08	.NUT, SELF-LOCKING, HE #8-32	2
26	PAOZZ	19207	12414419-040	SCREW, CAP, HEXAGON H M4 X .7 X 10	16
27	PAOZZ	19207	12414473-009	WASHER, FLAT M4.3	16
28	PAOZZ	84256	ALS3-470-2.0	NUT, PLAIN, KNURLED M4X.70 (GRIP RANGE 0.5 - 2.0)	16
29	AOOOO	82484	E-003-023	SWITCH ASSY, IGN	1
30	PAOZZ	82484	E-013-001	.LIGHT, INDICATOR	1
31	PAOZZ	19207	12378620-002	.SWITCH, TOGGLE	1
32	PAOZZ	19207	12378618-007	.SWITCH, PUSH	1
33	AOOOO	82484	E-003-020	SWITCH ASSY, ROTARY WARNING	1
34	PAOZZ	82484	E-013-002	.LAMP UNIT, VEHICULAR	1
35	PAOZZ	19207	12378620-002	.SWITCH, TOGGLE	1
36	PAOZZ	19207	12378618-004	.SWITCH, PUSH	1
37	AOOOO	82484	E-003-022	SWITCH ASSY, HAZARD HAZARD WARN	1
38	PAOZZ	82484	E-013-002	.LAMP UNIT, VEHICULAR	1
39	PAOZZ	19207	12378620-002	.SWITCH, TOGGLE	1
40	PAOZZ	19207	12378618-006	.SWITCH, PUSH	1

(1) ITEM NO	(2) SMR CODE	(3) FSCM	(4) PART NUMBER	(5) DESCRIPTION AND USABLE ON CODE (UOC)	(6) QTY
41	AOOOO	82484	E-003-017	SWITCH ASSY, ETHER	1
42	PAOZZ	82484	E-003-002	.LAMP UNIT, VEHICULAR	1
43	PAOZZ	19207	12378620-001	.SWITCH, TOGGLE	1
44	PAOZZ	82484	59L.412	.INSERT, LEGEND, LIGHT	1
45	AOOOO	82484	E-003-055	SWITCH ASSY, LAMP TE	1
46	PAOZZ	82484	E-013-001	.LIGHT, INDICATOR	1
47	PAOZZ	19207	12378620-001	.SWITCH, TOGGLE	1
48	PAOZZ	19207	12378618-023	.MARKER, IDENTIFICATI	1
49	AOOOO	82484	E-003-021	SWITCH ASSY, RADIATO RADIATOR FAN OFF	1
50	PAOZZ	82484	E-013-002	.LAMP UNIT, VEHICULAR	1
51	PAOZZ	19207	12378620-002	.SWITCH, TOGGLE	1
52	PAOZZ	19207	12378618-005	.SWITCH, PUSH	1
53	PAOZZ	84256	ALS3-470-3.3	NUT, PLAIN, KNURLED M4X.70 (GRIP RANGE 2.0 - 3.30)	4
54	PFOOO	07479	AMI5001	PANEL, VEHICULAR OPE	1
55	PAOZZ	71744	CM7-7373	.LAMP, INCANDESCENT	6
56	PAOZZ	71744	CM7376	.LAMP, INCANDESCENT	36
57	PAOZZ	19207	12414419-042	SCREW, MACHINE M4 X .7 X 16	4
58	PAOZZ	32171	EM7175-9	TACHOMETER, ELECTRIC UOC: LWB, LWC, LWD,	1
58	PAOZZ	32171	EM7175-12	TACHOMETER, ELECTRON UOC: LWB, LWC, LWD,	1
59	XAOZZ	32171	A-3307-4	.U-BRACKET, GAUGE UOC: LWB, LWC, LWD,	1
60	PAOZZ	96906	MS21083N08	.NUT, SELF-LOCKING, HE #8-32 UOC: LWB, LWC, LWD,	2
61	PAOZZ	32171	3M7175-8	SPEEDOMETER	1
62	XAOZZ	32171	A-3307-4	.U-BRACKET, GAUGE	1
63	PAOZZ	96906	MS21083N08	.NUT, SELF-LOCKING, HE #8-32	2

END OF FIGURE

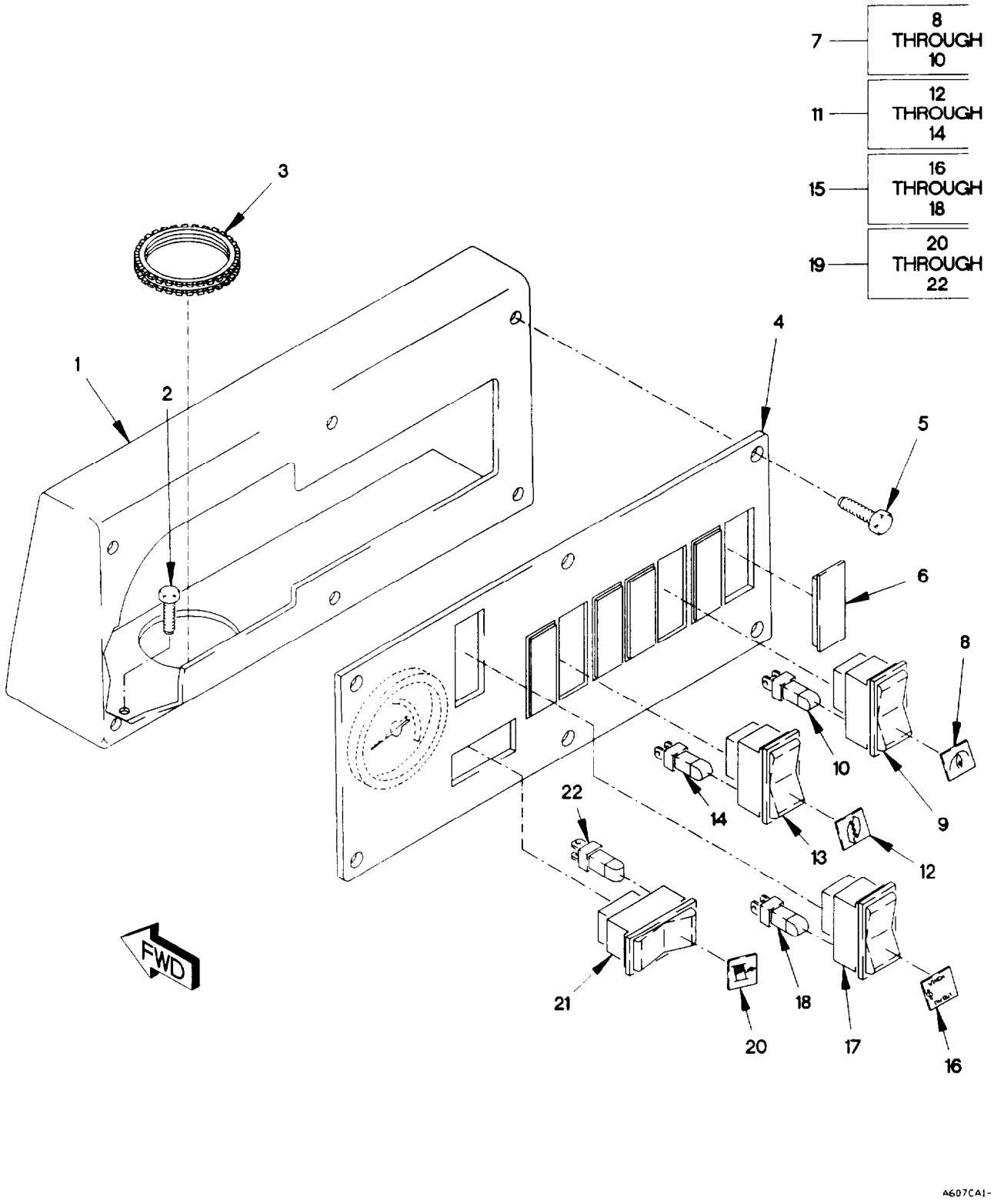

Figure 51. Auxiliary Panel and Switches

(1) ITEM NO	(2) SMR CODE	(3) FSCM	(4) PART NUMBER	(5) DESCRIPTION AND USABLE ON CODE (UOC)	(6) QTY
				GROUP 06067: INSTRUMENT OR ENGINE CONTROL PANEL	
				FIG. 51 AUXILIARY PANEL AND SWITCHES	
1	PAOZZ	19207	12378453	HOUSING, PANEL, VEHIC	1
				UOC: LWB, LWC, LWD,	
2	PAOZZ	19207	12414419-054	SCREW, CAP, HEXAGON H M5 X .8 X 6	8
				UOC: LWB, LWC, LWD,	
3	PAOZZ	96906	MS21266-2N	GROMMET, NONMETALLIC	1
				UOC: LWB, LWC, LWD,	
4	PAOZZ	19207	12378452	PANEL, VEHICULAR OPE	1
				UOC: LWB, LWC, LWD,	
5	PAOZZ	19207	12414419-039	SCREW, CAP, HEXAGON H M4 X .7 X 8	6
				UOC: LWB, LWC, LWD,	
6	PAOZZ	45152	1588570	COVER, ELECTRICAL SW	6
				UOC: LWB, LWC, LWD,	
7	AOOOO	82484	E-003-027	SWITCH ASSY, ARCTIC HEATER	1
8	PAOZZ	19207	12378618-001	.INSERT, LEGEND	1
9	PAOZZ	19207	12378620-002	.SWITCH, TOGGLE	1
10	PAOZZ	82484	E-013-002	.LAMP UNIT, VEHICULAR	1
11	AOOOO	82484	E-003-025	SWITCH ASSY, PTO ENG PTO ENGAGED	1
				UOC: LWB, LWC, LWD,	
12	PAOZZ	19207	12378618-009	.SWITCH, PRESSURE	1
				UOC: LWB, LWC, LWD,	
13	PAOZZ	19207	12378620-002	.SWITCH, TOGGLE	1
				UOC: LWB, LWC, LWD,	
14	PAOZZ	82484	E-013-001	.LIGHT, INDICATOR	1
				UOC: LWB, LWC, LWD,	
15	AOOOO	82484	E-003-035	SWITCH ASSEMBLY, WIN WINCH IN-OUT	1
				UOC: LWB, LWC, LWD,	
16	PAOZZ	82484	59L.487	.CAP, LENS WINCH IN/OUT	1
				UOC: LWB, LWC, LWD,	
17	PAOZZ	45152	1913570	.SWITCH, TOGGLE	1
				UOC: LWB, LWC, LWD,	
18	PAOZZ	82484	E-013-001	.LIGHT, INDICATOR	1
				UOC: LWB, LWC, LWD,	
19	AOOOO	82484	E-003-024	SWITCH ASSEMBLY, WIN WINCH CONTROL	1
				UOC: LWB, LWC, LWD,	
20	PAOZZ	0FW39	12378618-008	.CAP, LENS	1
				UOC: LWB, LWC, LWD,	
21	PAOZZ	19207	12378620-002	.SWITCH, TOGGLE	1
				UOC: LWB, LWC, LWD,	
22	PAOZZ	82484	E-013-001	.LIGHT, INDICATOR	1
				UOC: LWB, LWC, LWD,	
				END OF FIGURE	

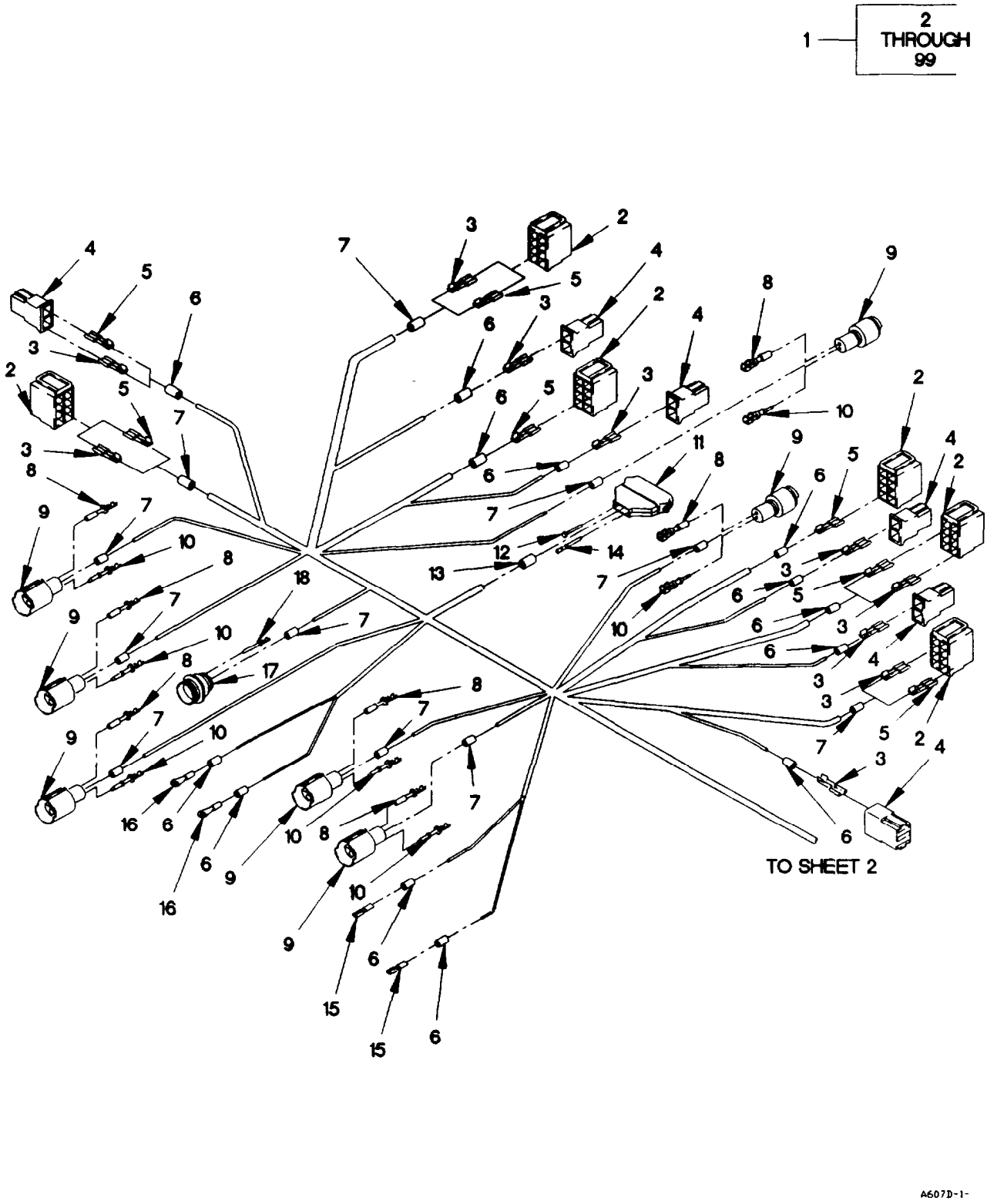

Figure 52. WTECII Dashboard Cable Assembly and Power Distribution Panel (Sheet 1 of 7)

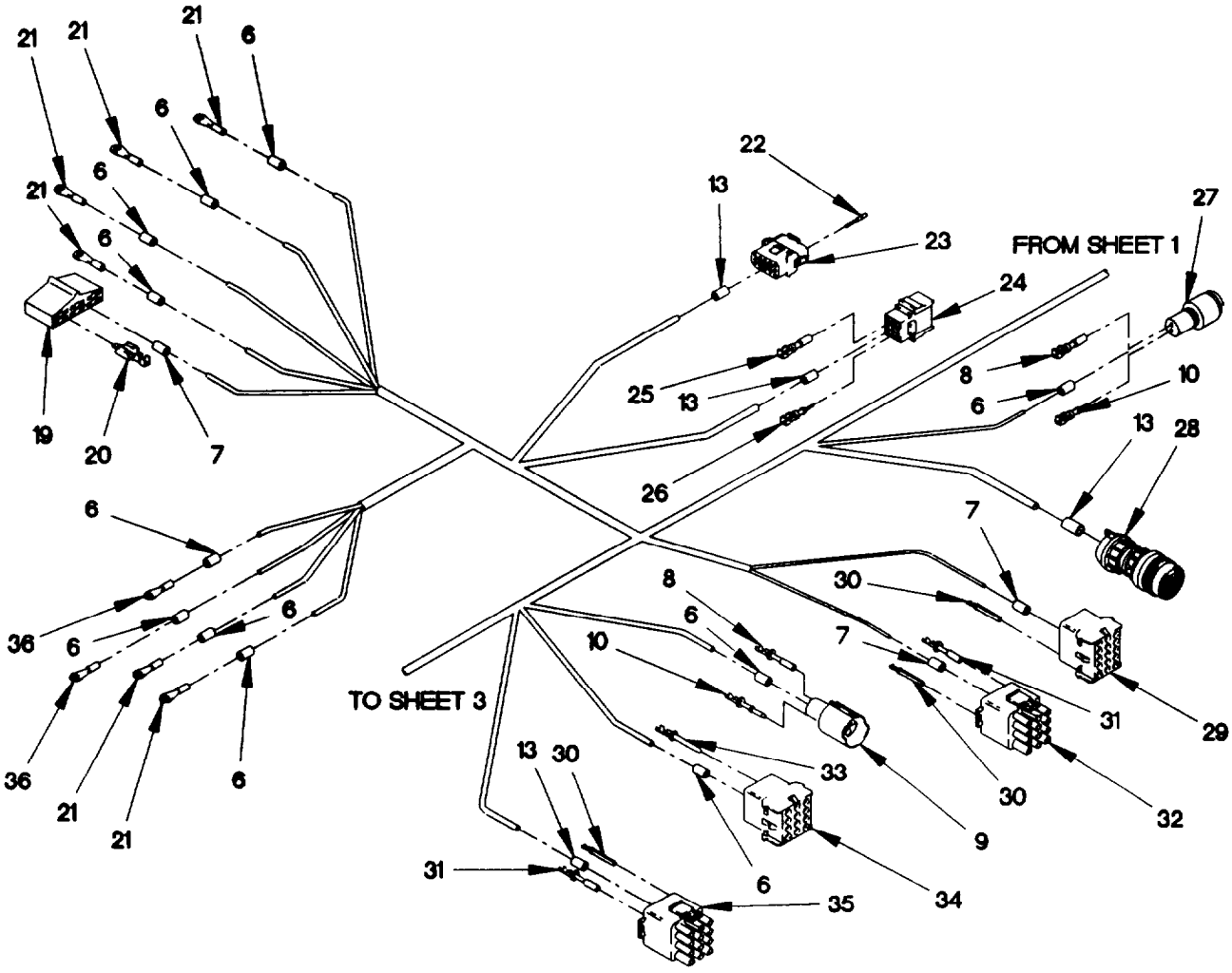

Figure 52. WTECII Dashboard Cable Assembly and Power Distribution Panel (Sheet 2 of 7)

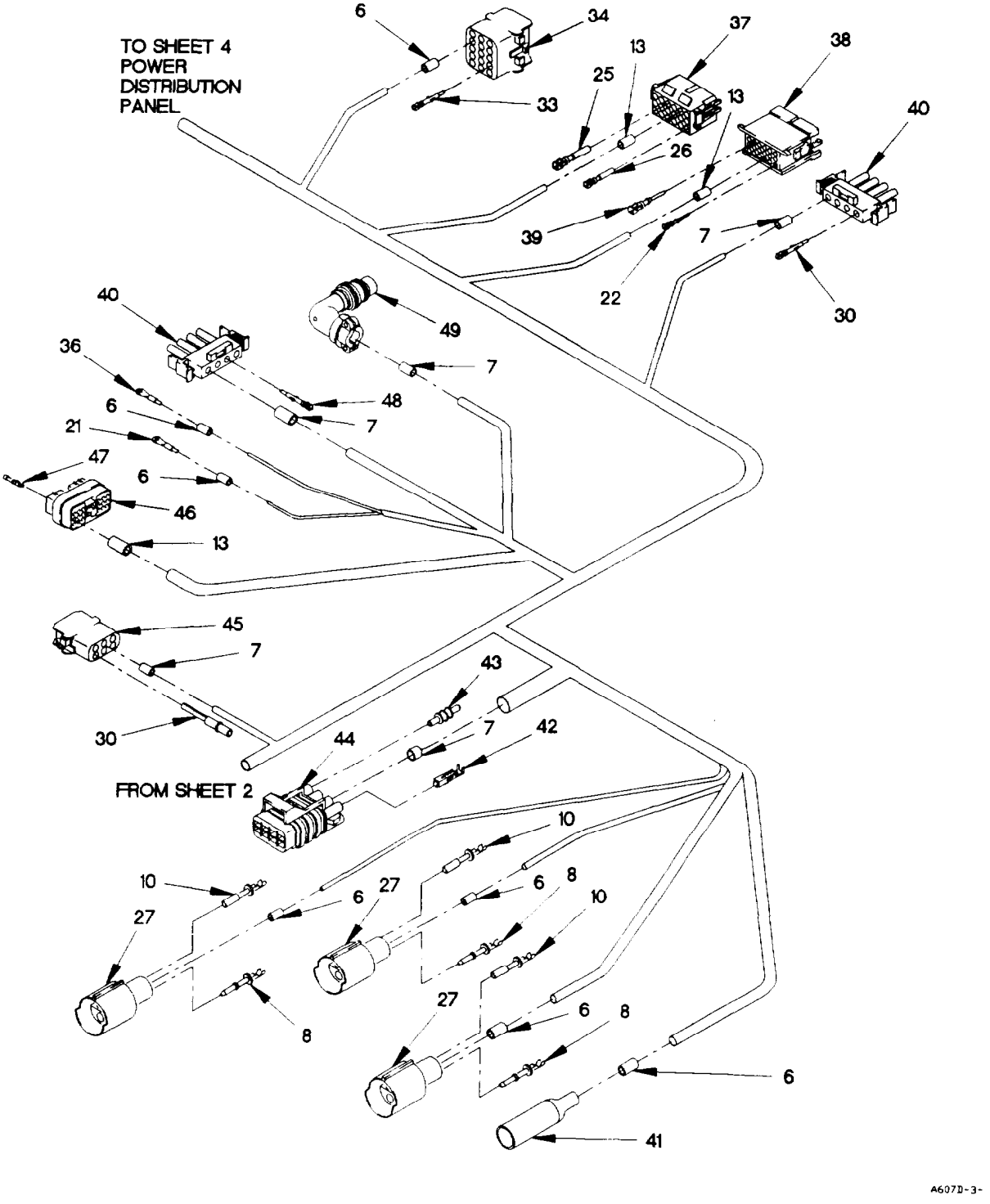

Figure 52. WTECII Dashboard Cable Assembly and Power Distribution Panel (Sheet 3 of 7)

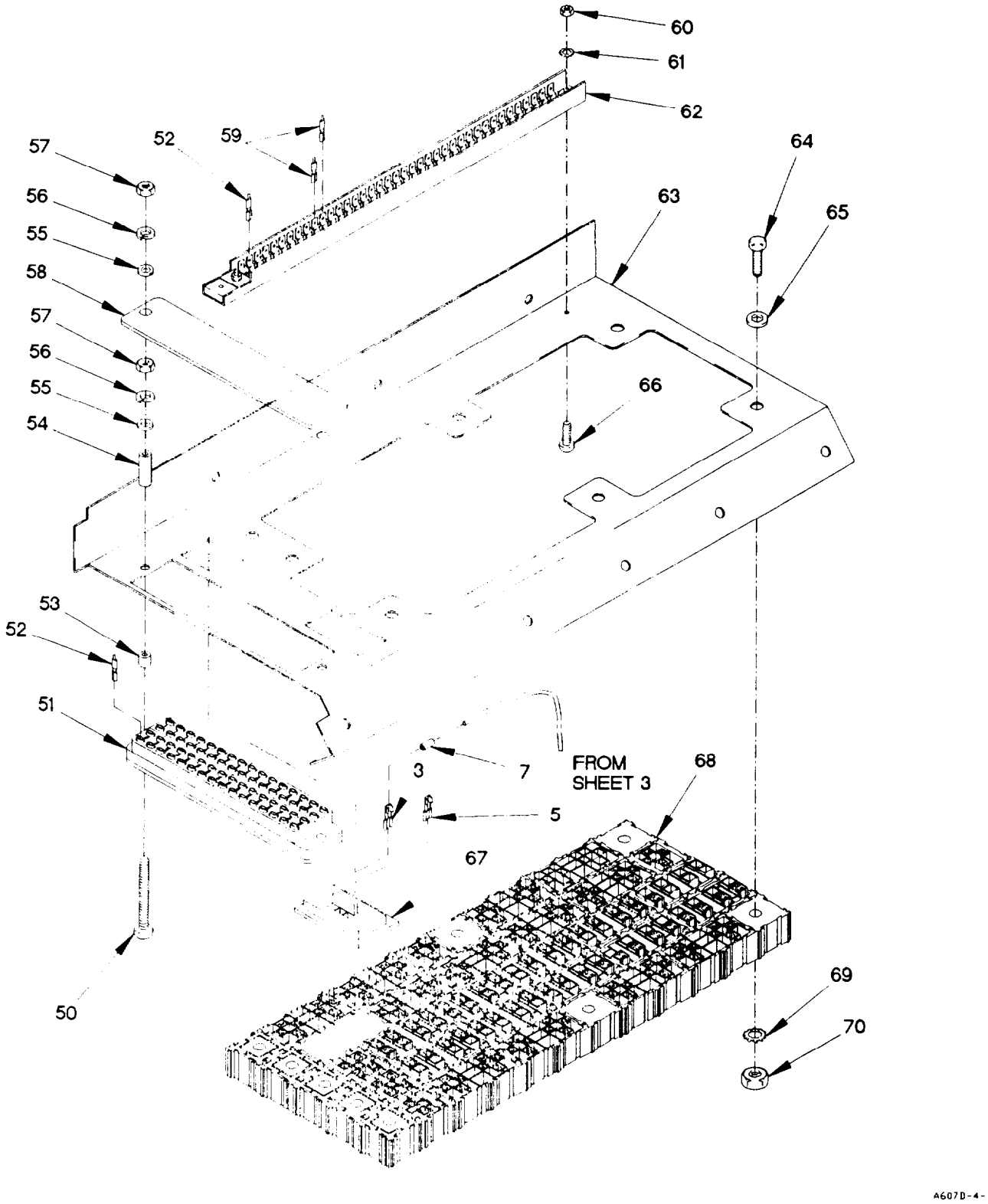

Figure 52. WTECII Dashboard Cable Assembly and Power Distribution Panel (Sheet 4 of 7)

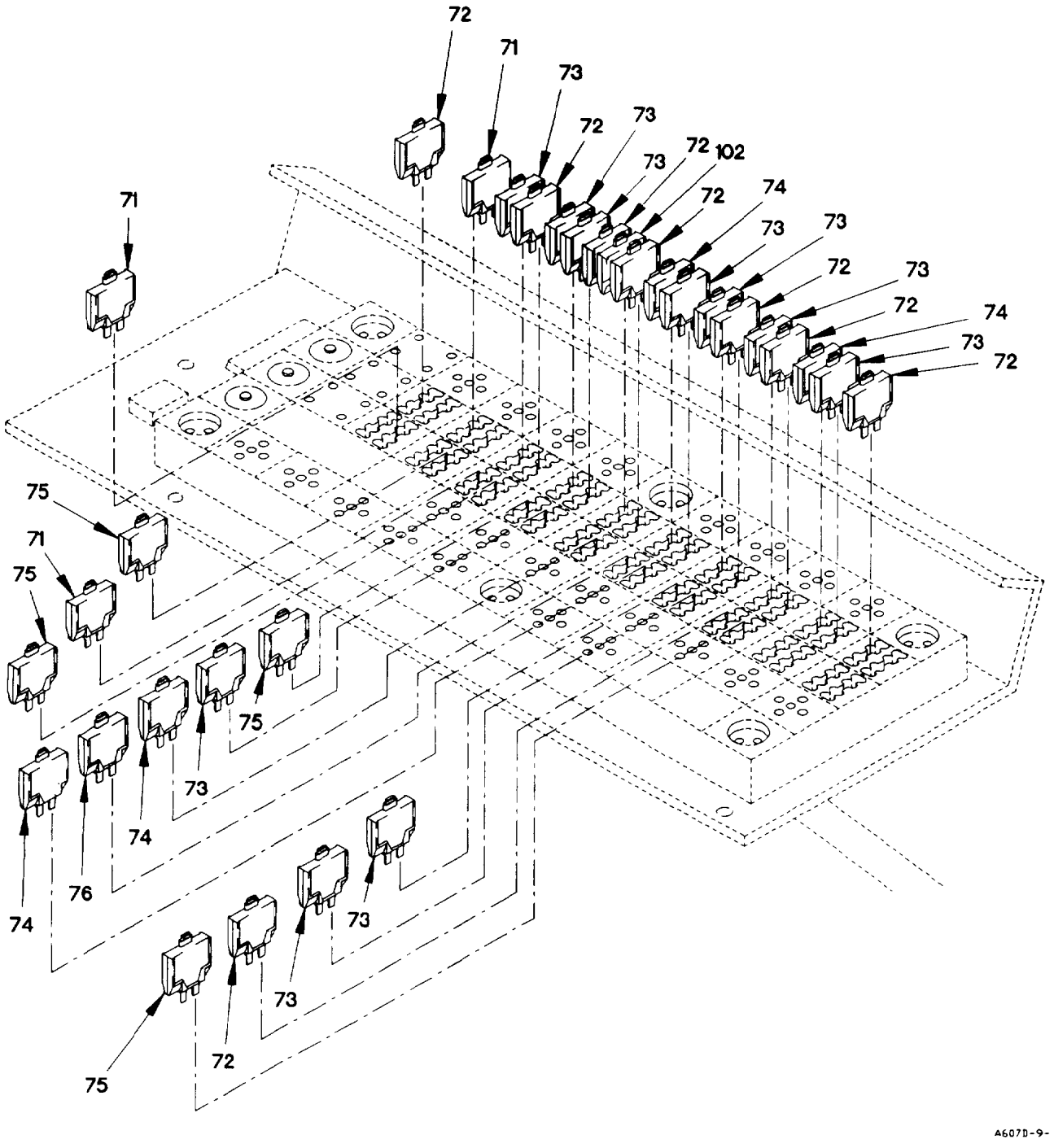

Figure 52. WTECII Dashboard Cable Assembly and Power Distribution Panel (Sheet 5 of 7)

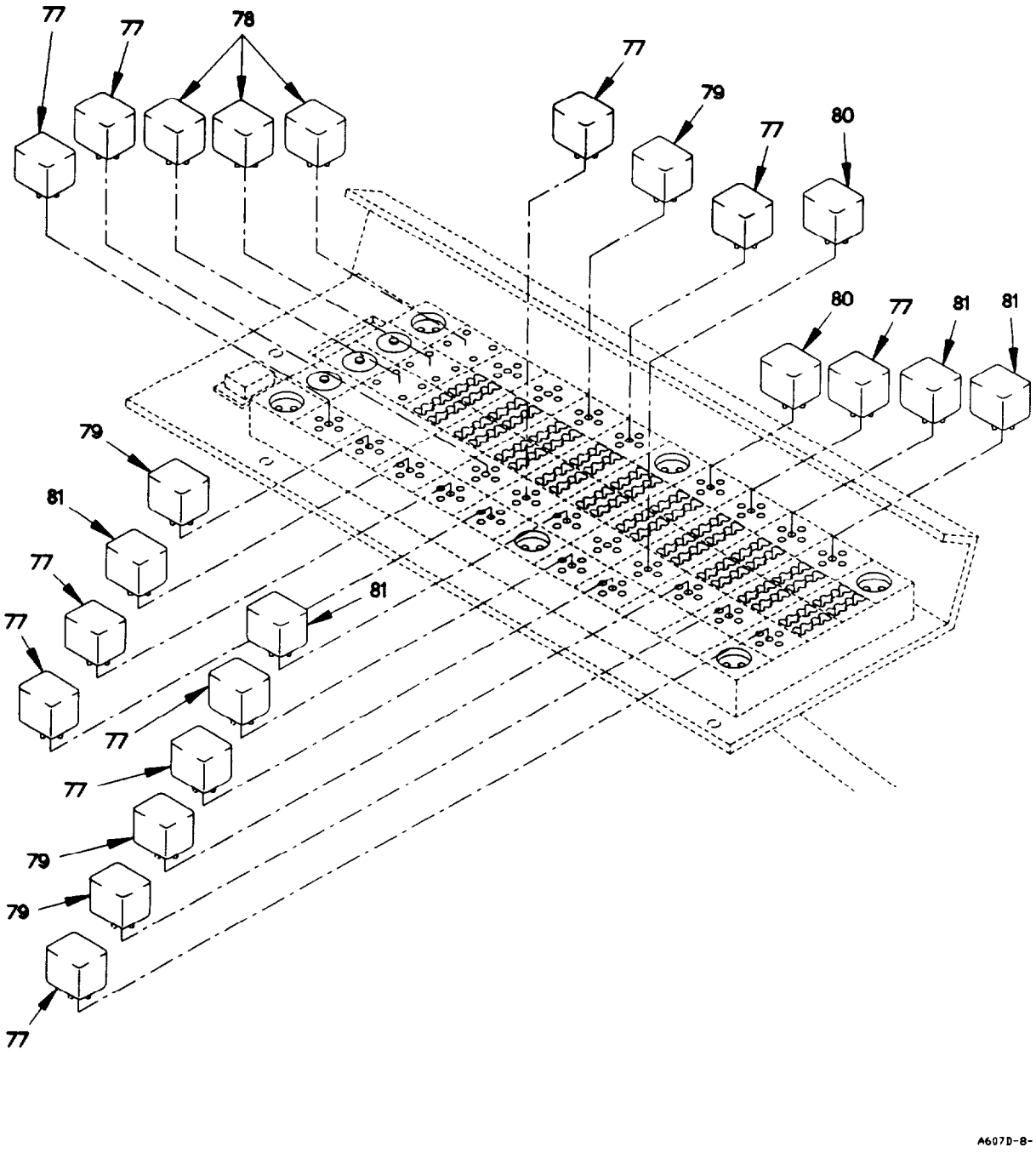

Figure 52. WTECII Dashboard Cable Assembly and Power Distribution Panel (Sheet 6 of 7)

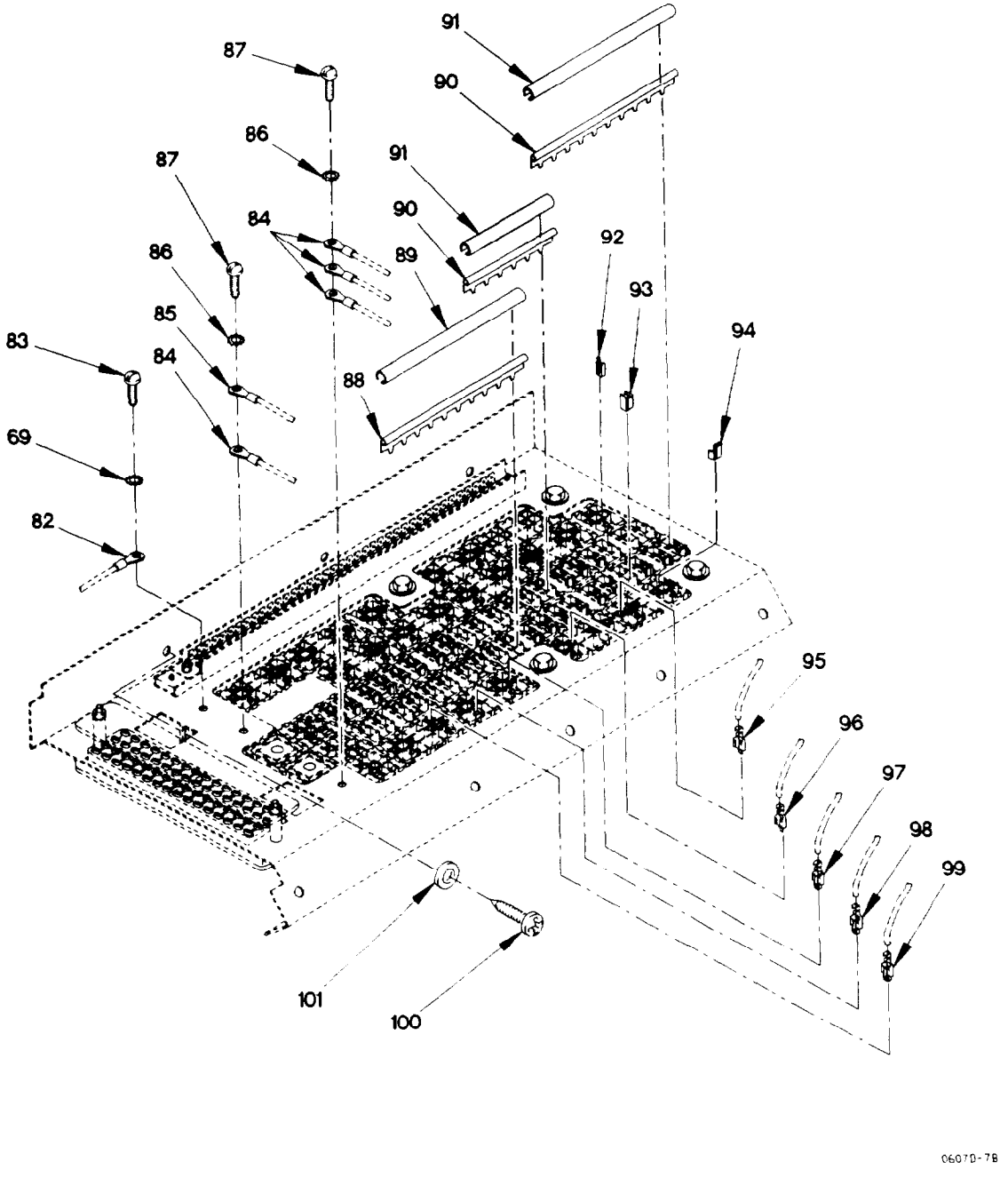

Figure 52. WTECII Dashboard Cable Assembly and Power Distribution Panel (Sheet 7 of 7)

(1) ITEM NO	(2) SMR CODE	(3) FSCM	(4) PART NUMBER	(5) DESCRIPTION AND USABLE ON CODE (UOC)	(6) QTY
				GROUP 0607: INSTRUMENT OR ENGINE CONTROL	
				FIG. 52 WTEC II DASHBOARD CABLE ASSEMBLY AND POWER DISTRIBUTION PANEL	
1	PAOFF	0FW39	12420877	WIRING HARNESS, BRAN	1
2	PAFZZ	82484	596289	.CONNECTOR BODY, RECE	5
3	PAFZZ	00779	60253-2	.TERMINAL, QUICK DISC	13
4	PAFZZ	82484	913 328	.CONNECTOR BODY, RECE	5
5	PAFZZ	00779	41274	.TERMINAL, QUICK DISC	18
6	PAOZZ	81349	M43436/1-1	.BAND, MARKER	33
7	PAOZZ	81349	M43436/1-2	.BAND, MARKER	19
8	PAFZZ	71468	110238-0195	.PIN, GROOVED, HEADLES	20
9	PAFZZ	19207	12258940-4	.CONNECTOR, PLUG, ELEC	8
10	PAFZZ	11083	7N7779	.CONTACT, ELECTRICAL	20
11	PAFZZ	19207	12414260-002	.CONNECTOR BODY, RECE (PX7)	1
12	PAFZZ	11083	9G3695	.PLUG, END SEAL, ELECT	6
13	PAOZZ	81349	M43436/1-3	.BAND, MARKER	9
14	PAFZZ	71468	110-238-0446	.CONTACT, ELECTRICAL	22
15	PAOZZ	00779	3-350820-2	.TERMINAL, QUICK DISC (TL158, TL159, TL162, TL163)	4
16	PAOZZ	96906	MS25036-107	.TERMINAL, LUG (TL160, TL161)	3
17	PAFZZ	36378	1003292-07	.CONNECTOR BODY, RECE (J118)	1
18	PAFZZ	04071	R354273-11	.CONTACT, ELECTRICAL	5
19	PAFZZ	19207	12420315	.CONNECTOR BODY, PLUG (PX26)	1
20	PAOZZ	0FW39	12420316	.TERMINAL, QUICK DISC	6
21	PAOZZ	96906	MS25036-108	.TERMINAL, LUG	7
22	PAFZZ	09922	SM16M-1TK6	.CONTACT, ELECTRICAL	32
23	PAFZZ	09922	SMS36P-1	.CONNECTOR BODY, PLUG (J31)	1
24	PAFZZ	09922	SMS12R-1	.CONNECTOR, PLUG, ELECT (J43)	1
25	PAFZZ	09922	SC16M-1TK6	.CONTACT, ELECTRICAL	18
26	PAFZZ	09922	SC14M-1TK6	.CONTACT, ELECTRICAL	7
27	PAFZZ	11083	7N9738	.CONNECTOR, BODY, PLUG (PX24, PX34, PX50, P99)	4
28	PAFZZ	19207	12419947	.CONNECTOR, PLUG, ELEC (PX15)	1
29	PAFZZ	14933	87096-012	.CONNECTOR BODY, RECE (J19)	1
30	PAFZZ	00779	350550-6	.CONTACT, ELECTRICAL	35
31	PAFZZ	00779	350923-6	.TERMINAL, LUG	3
32	PAFZZ	037Z3	87097-012	.CONNECTOR BODY, PLUG (P18)	1
33	PAFZZ	19207	12420915-003	.CONTACT, ELECTRICAL (J2)	1
34	PAFZZ	03956	1805607-40	.CONNECTOR BODY, RECE (P912)	1
35	PAFZZ	58536	A-A-55464-07	.CONNECTOR, BODY, PLUG (J913)	1
36	PAOZZ	96906	MS25036-112	.TERMINAL, LUG (TL152, TL153, TL501)	3
37	PAFZZ	09922	SMS18R-1	.CONNECTOR BODY, RECE (J27)	1
38	PAFZZ	09922	SMS18P-1	.CONNECTOR BODY, RECE (J51)	1
39	PAFZZ	09922	SM14M-1TK6	.CONTACT, ELECTRICAL	7
40	PAFZZ	14933	87097-006	.CONNECTOR BODY, PLUG (J78, J7)	2
41	PAFZZ	96906	MS27142-3	.CONNECTOR, PLUG, ELEC (P65)	1
42	PAOZZ	77060	12048074	.TERMINAL, QUICK DISC	6
43	PAFZZ	77060	12059168	.ITEM, SPECIAL	1

(1) ITEM NO	(2) SMR CODE	(3) FSCM	(4) PART NUMBER	(5) DESCRIPTION AND USABLE ON CODE (UOC)	(6) QTY
44	PAFZZ	19207	12417678	.CONNECTOR, PLUG, ELEC (J111)	1
45	PAFZZ	58536	A-A-55463-03	.CONNECTOR, BODY, RECE (J2)	1
46	PAFZZ	77060	1203 4398	.CONNECTOR, BODY, PLUG (PX33)	1
47	PAOZZ	77060	12103881	.TERMINAL, QUICK DISC	17
48	PAFZZ	09769	350922-6	.CONTACT, ELECTRICAL	3
49	PAFZZ	71468	CA3108E16-10S-F8 0	.CONNECTOR, PLUG, ELEC (PX20)	1
50	PAOZZ	96906	MS51957-55	.SCREW, MACHINE #8-32 X 2 1/2	2
51	PAOZZ	11873	10613-64004	.TERMINAL BLOCK, ELEC	1
52	PAOZZ	74025	10476-103	.TERMINAL, QUICK DISC	78
53	PAOZZ	65664	SPHS-224-9	.SPACER, SLEEVE	2
54	PAOZZ	65664	SPHS-274-9	.SPACER, SLEEVE	2
55	PAOZZ	96906	MS15795-847	.WASHER, FLAT NO. 8	2
56	PAOZZ	96906	MS35338-137	.WASHER, LOCK NO. 8	2
57	PAOZZ	96906	MS35649-284	.NUT, PLAIN, HEXAGON 5/32-32	2
58	PAOZZ	0FW39	12420555	.COVER, TERMINAL BOAR	1
59	PAOZZ	00779	42844-1	.TERMINAL, QUICK DISC	2
60	PAOZZ	96906	MS35649-262	.NUT, PLAIN, HEXAGON 1/8 X 32	2
61	PAOZZ	96906	MS35335-30	.WASHER, LOCK NO. 6	2
62	PAOZZ	11873	15195	.TERMINAL BLOCK, ELEC	1
63	PAOZZ	19207	12417650	.PANEL, POWER DISTRIB	1
64	PAOZZ	96906	MS35307-303	.SCREW, CAP, HEXAGON H 1/4-20 X 1/2	6
65	PAOZZ	96906	MS27183-52	.WASHER, FLAT 9/32	7
66	PAOZZ	19207	MS51492-03	.SCREW, MACHINE 6-32 X 3/4	2
67	PAOZZ	2E480	12414262	.CONNECTOR, RECEPTACL (PX21)	1
68	PAOZZ	96906	100760	.PANEL, POWER DISTRIB	1
69	PAOZZ	96906	MS35335-61	.WASHER, LOCK 1/4	7
70	PAOZZ	19207	MS35649-2254	.NUT, PLAIN, HEXAGON 1/4 X 16	6
71	PAOZZ	19207	12420937-006	.CIRCUIT BREAKER	2
72	PAOZZ	19207	12420937-003	.CIRCUIT BREAKER, MAN	10
73	PAOZZ	19207	12420937-004	.CIRCUIT BREAKER	15
74	PAOZZ	19207	12420937-005	.CIRCUIT BREAKER	6
75	PAOZZ	19207	12420937-002	.CIRCUIT BREAKER	1
76	PAOZZ	19207	12420938-004	.CIRCUIT BREAKER	3
77	PAOZZ	19207	124142970-001	.RELAY, ELECTROMAGNET (K2, K6, K7, K13, K20, K27-31)	9
78	PAOZZ	19207	12418342	.SEMICONDUCTOR DEVIC (D1, D2, D3)	3
79	PAOZZ	77342	VF4-15H11-S05	.RELAY, ELECTROMAGNET (K8, K9, K10, K52)	4
80	PAOZZ	96906	12414270-002	.RELAY, ELECTROMAGNET	3
81	PAOZZ	77342	VF4-15H11-S05	.RELAY, ELECTROMAGNET (K11, K19, K24, K53)	4
82	PAOZZ	96906	MS25036-157	.TERMINAL, LUG	2
83	PAOZZ	96906	MS35307-308	.SCREW, CAP, HEXAGON H 1/4-20 X 5/8	1
84	PAOZZ	96906	MS25036-113	.TERMINAL, LUG	5
85	PAOZZ	96906	MS25036-109	.TERMINAL, LUG	1
86	PAOZZ	96906	MS35335-62	.WASHER, LOCK 5/16	2
87	PAOZZ	96906	MS35307-334	.BOLT, MACHINE 5/16-8 X 1	3
88	PAOZZ	19207	12419927-002	.CONTACT ASSEMBLY, EL	1
89	PAOZZ	2E480	75588	.INSULATOR	1

(1) ITEM NO	(2) SMR CODE	(3) FSCM	(4) PART NUMBER	(5) DESCRIPTION AND USABLE ON CODE (UOC)	(6) QTY
90	PAOZZ	19207	12419927-003	.CONTACT ASSEMBLY, EL	2
91	PAOZZ	2E480	75572	.INSULATOR	2
92	PAOZZ	2E480	59056	.CLIP, RETAINING	104
93	PAOZZ	2E480	59099	.CLIP, RETAINING	35
94	PAOZZ	2E480	59158	.POLARIZING KEY, ELEC	11
95	PAOZZ	19207	12419928-002	.TERMINAL QUICK DISC	76
96	PAOZZ	2E480	30521	.TERMINAL QUICK DISC	29
97	PAOZZ	2E480	23433	.TERMINAL QUICK DISC	35
98	PAOZZ	19207	12419928-006	.TERMINAL QUICK DISC	6
99	PAOZZ	19204	12419928-008	.TERMINAL QUICK DISC	5
100	PAOZZ	15526	933-M6X12	SCREW, CAP, HEXAGON H	3
101	PAOZZ	D8286	DIN9021-5, 3-100H V-C-B3B	WASHER, FLAT M5.3	8
102	PAOZZ	19207	12420937-004	CIRCUIT BREAKER UOC: LAD, LWD,	1

END OF FIGURE

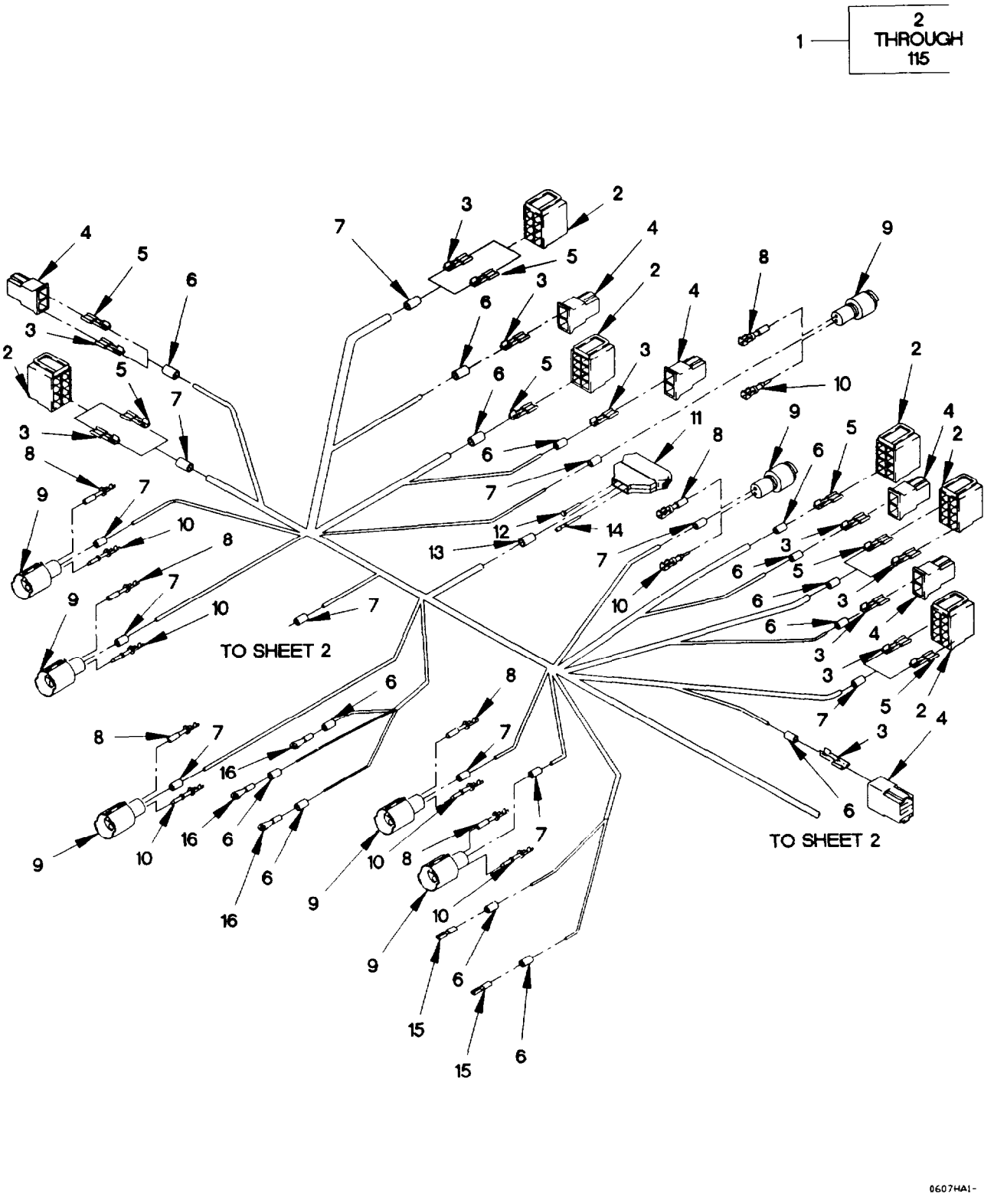

Figure 53. WTEC III Dashboard Cable Assembly and Power Distribution Panel (Sheet 1 of 10)

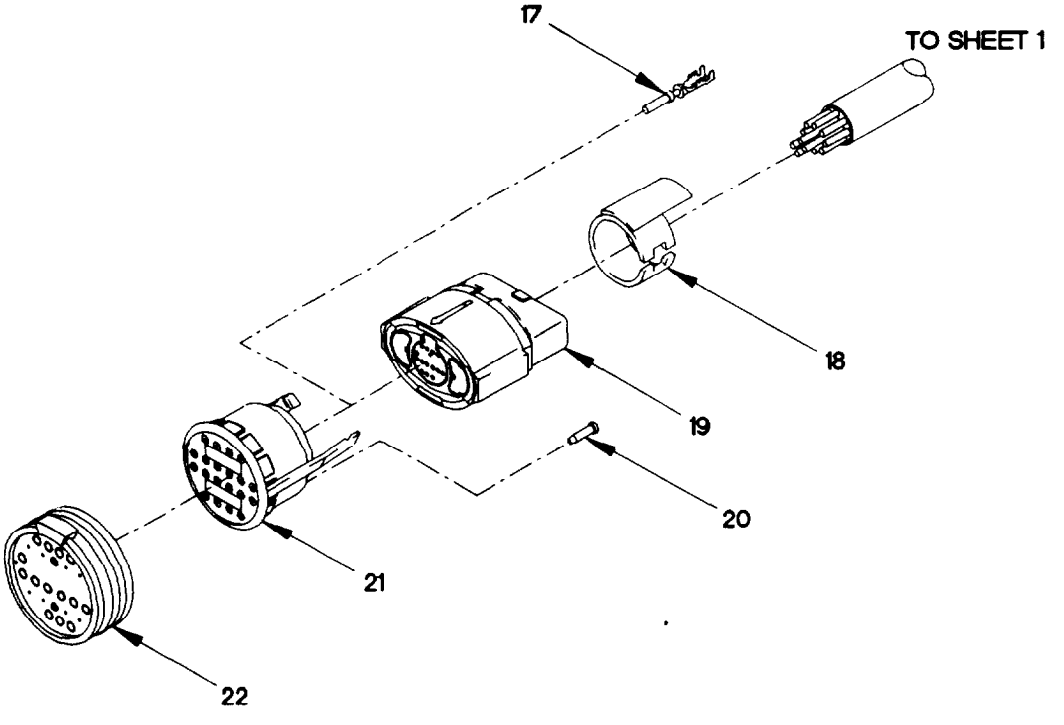

0607HA2-

Figure 53. WTEC III Dashboard Cable Assembly and Power Distribution Panel (Sheet 2 of 10)

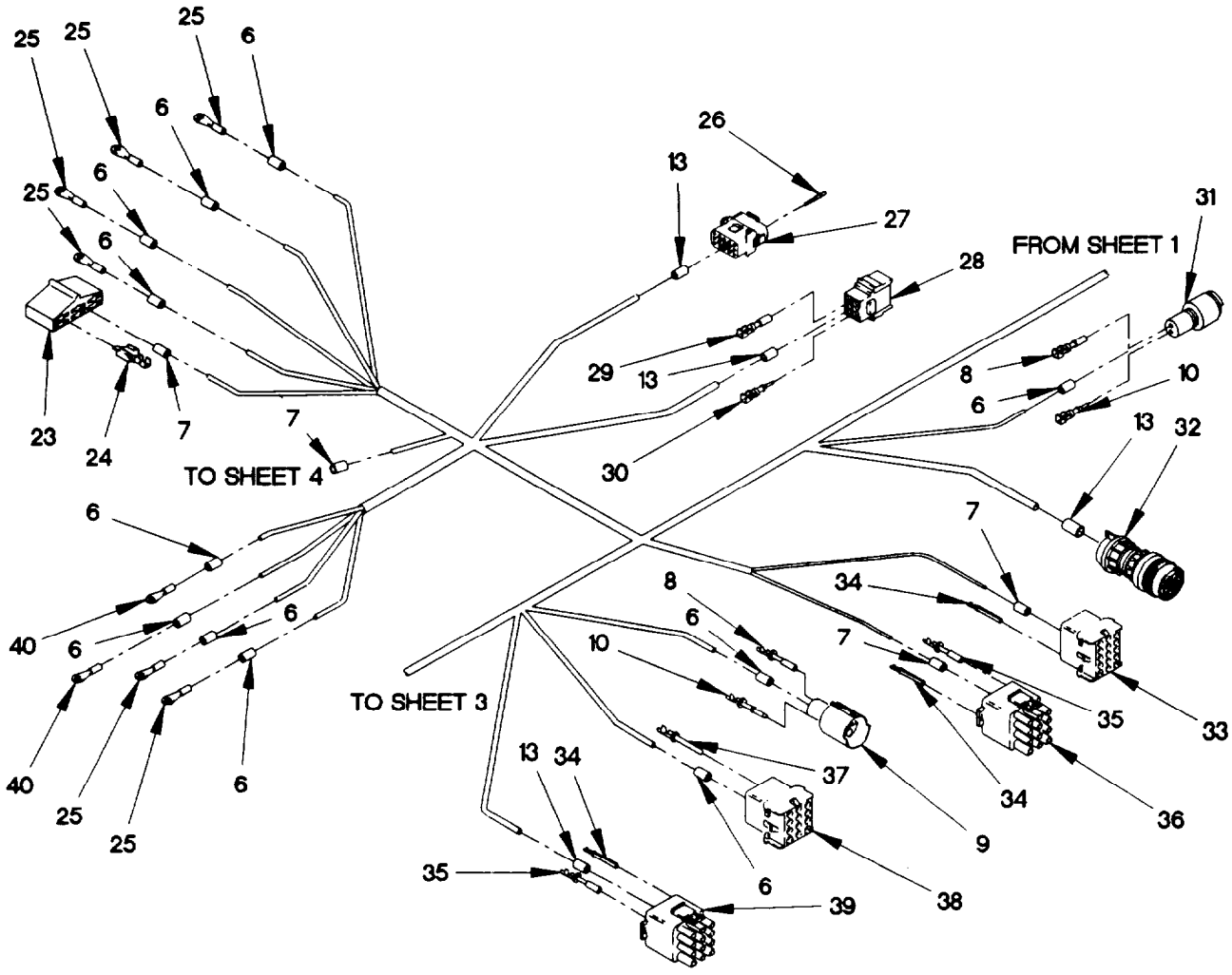

0607HA3-

Figure 53. WTEC III Dashboard Cable Assembly and Power Distribution Panel (Sheet 3 of 10)

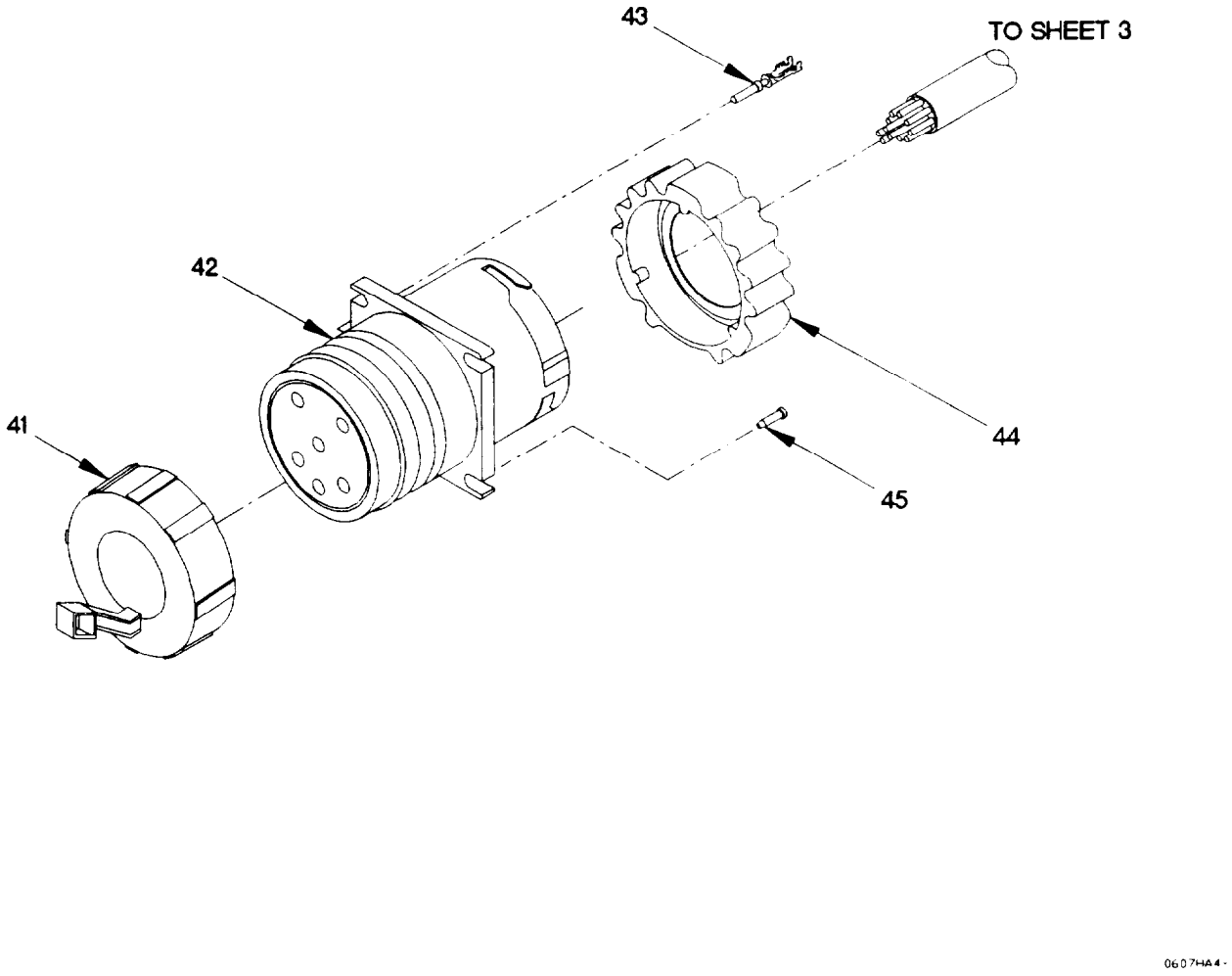

Figure 53. WTEC III Dashboard Cable Assembly and Power Distribution Panel (Sheet 4 of 10)

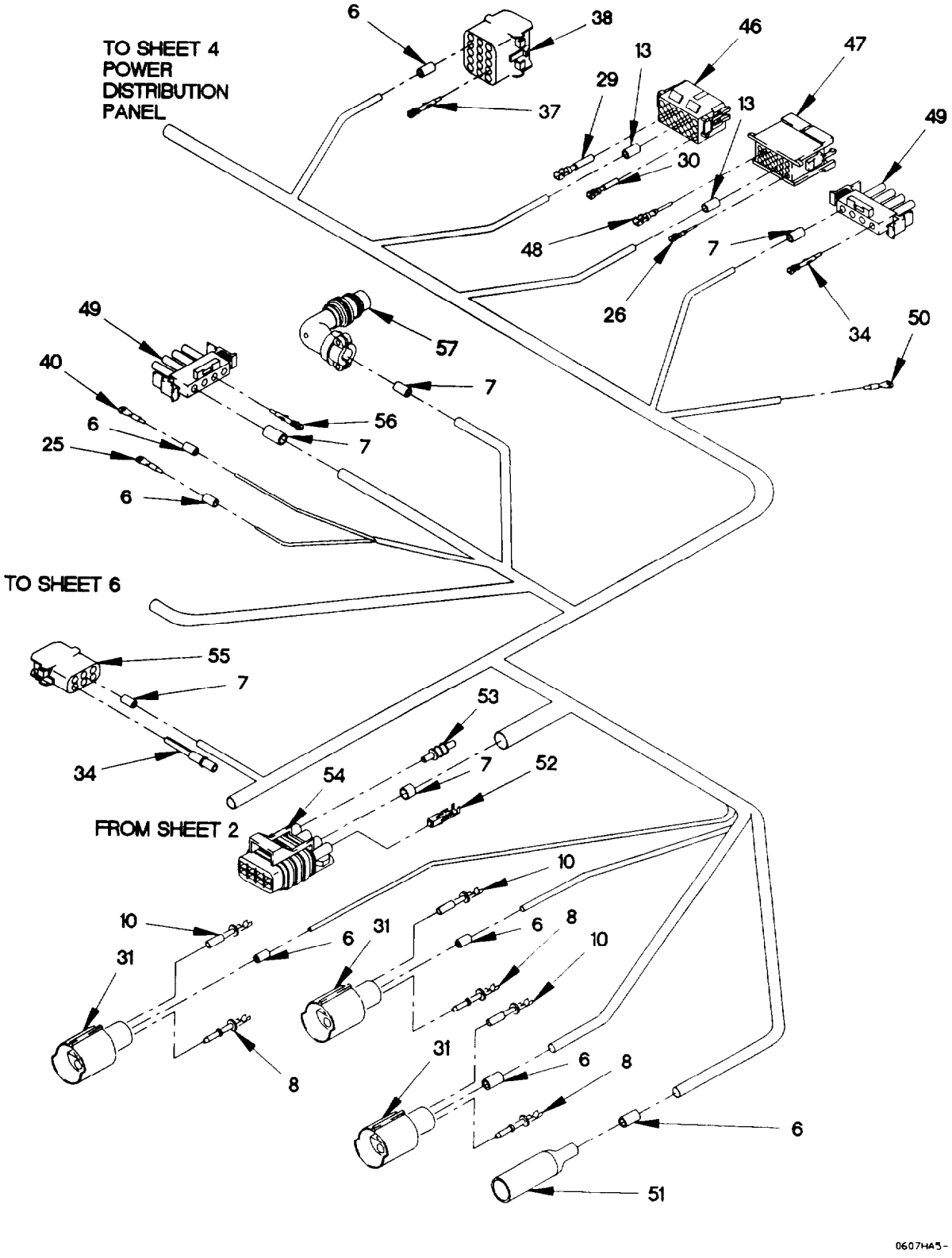

Figure 53. WTEC III Dashboard Cable Assembly and Power Distribution Panel (Sheet 5 of 10)

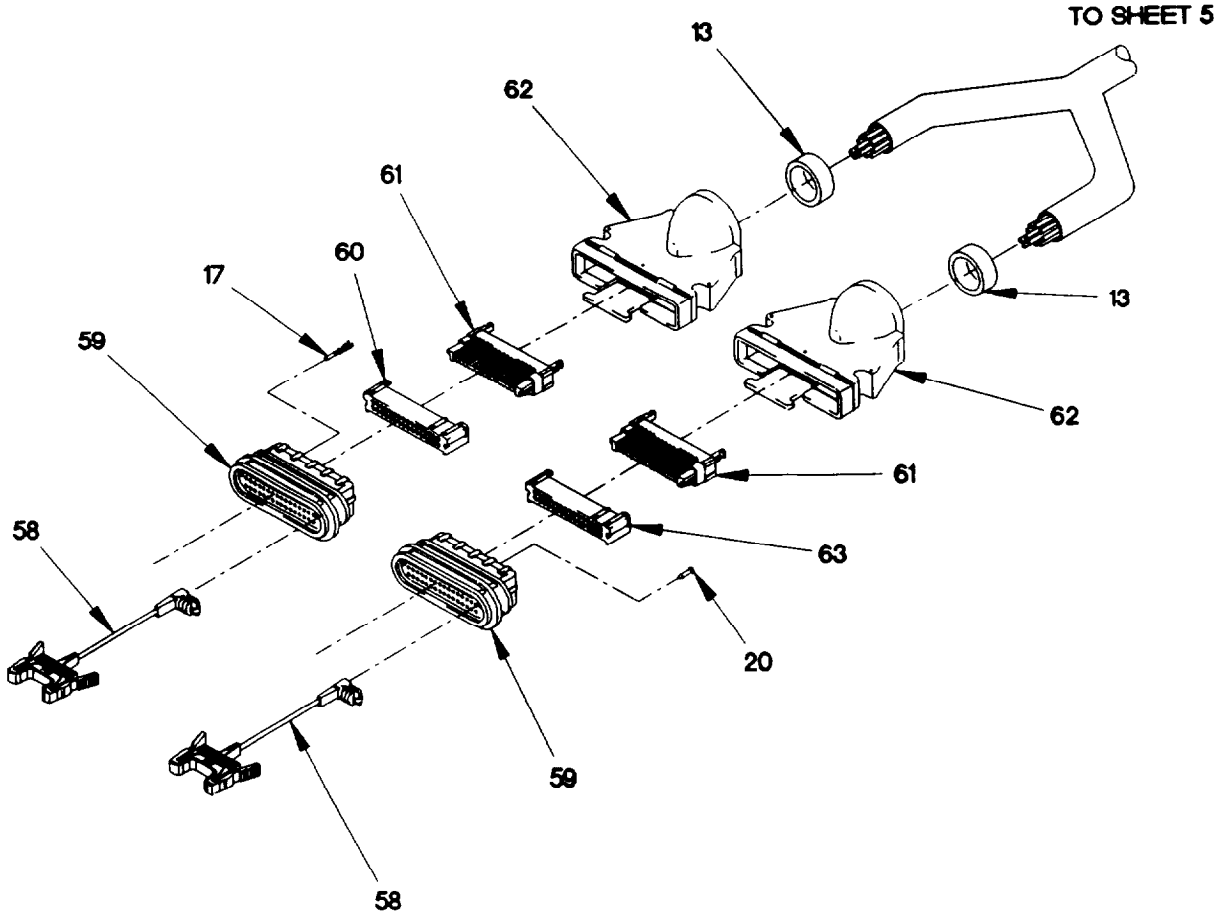

Figure 53. WTEC III Dashboard Cable Assembly and Power Distribution Panel (Sheet 6 of 10)

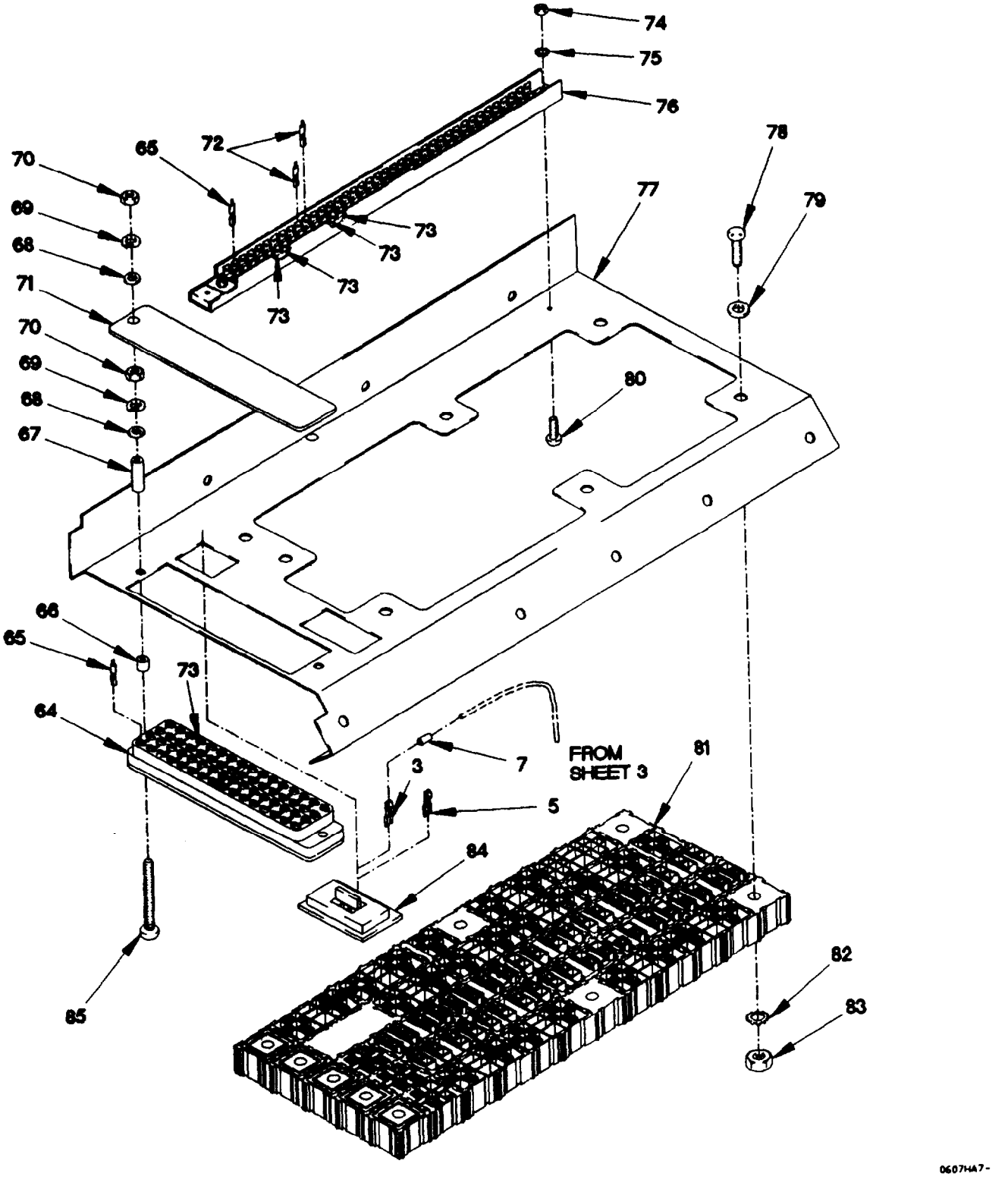

Figure 53. WTEC III Dashboard Cable Assembly and Power Distribution Panel (Sheet 7 of 10)

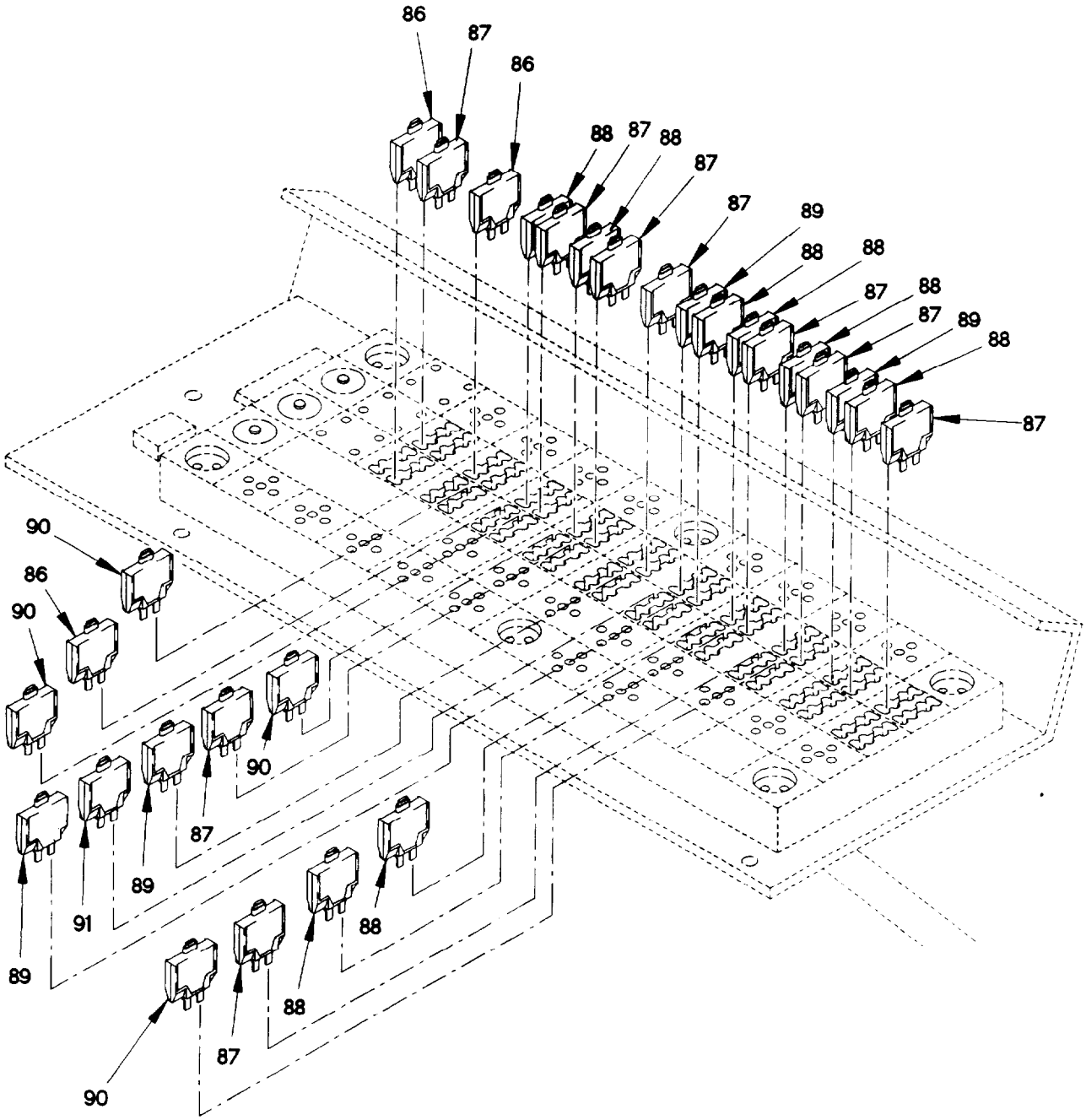

Figure 53. WTEC III Dashboard Cable Assembly and Power Distribution Panel (Sheet 8 of 10)

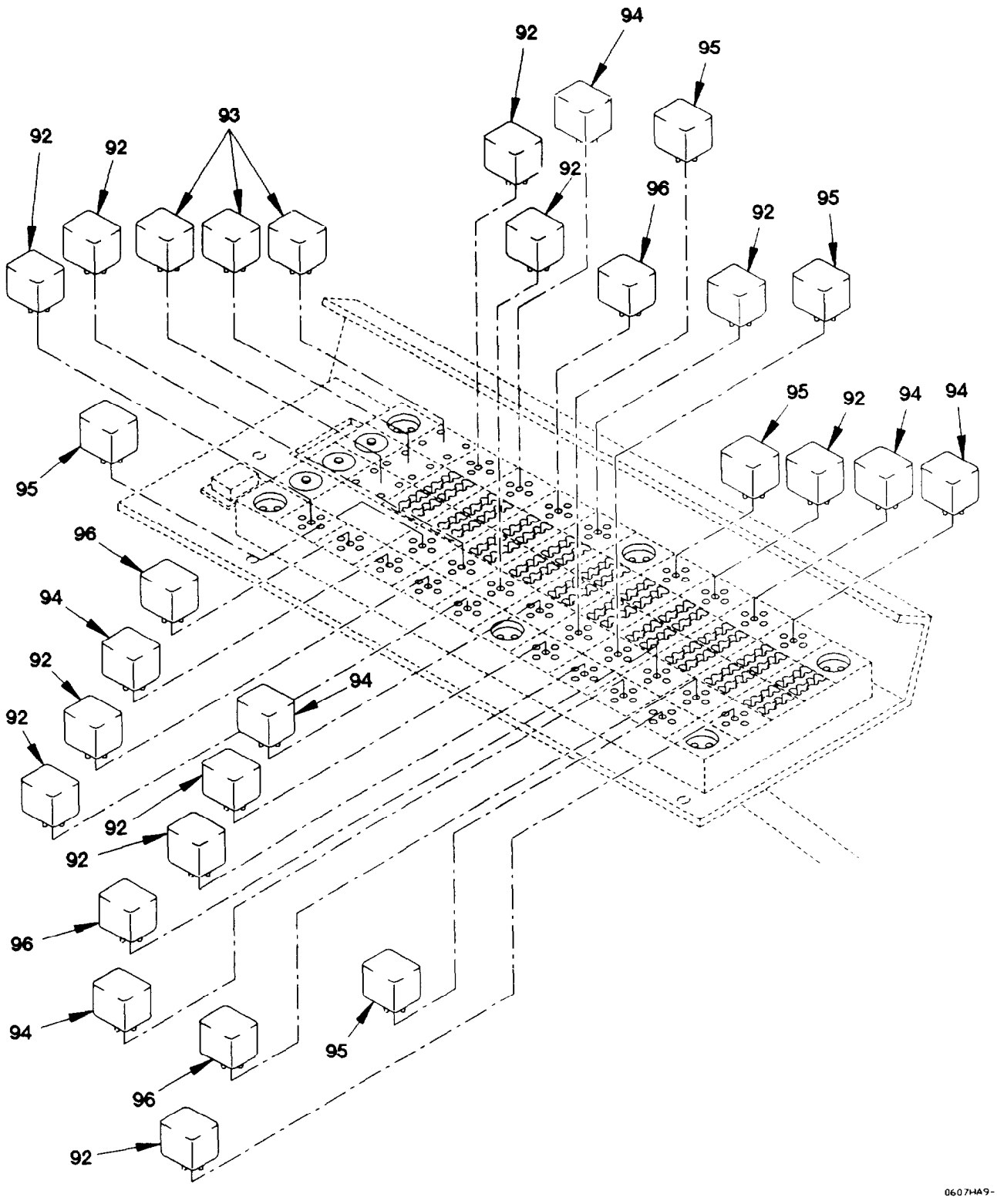

Figure 53. WTEC III Dashboard Cable Assembly and Power Distribution Panel (Sheet 9 Of 10)

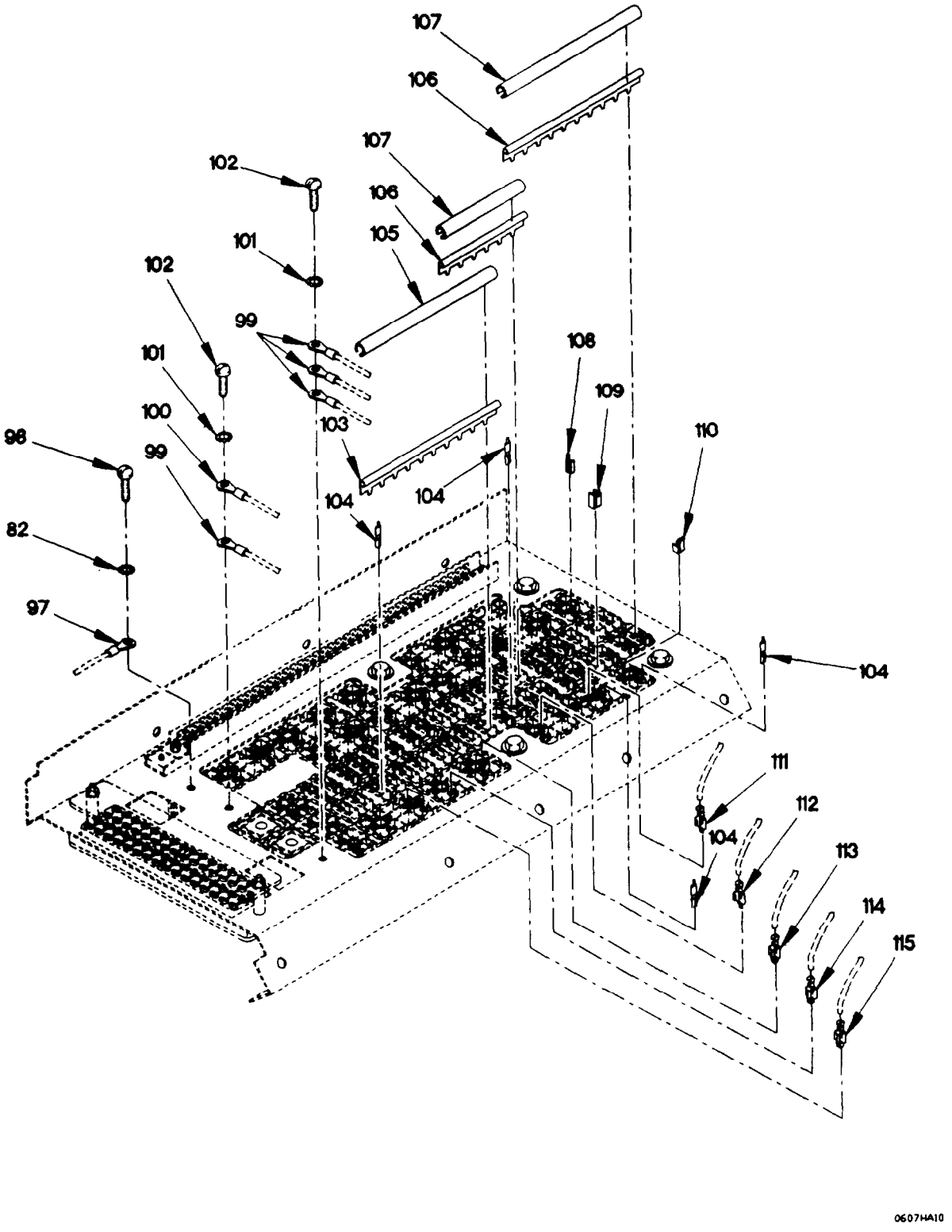

Figure 53. WTEC III Dashboard Cable Assembly and Power Distribution Panel (Sheet 10 Of 10)

(1) ITEM NO	(2) SMR CODE	(3) FSCM	(4) PART NUMBER	(5) DESCRIPTION AND USABLE ON CODE (UOC)	(6) QTY
				GROUP 0607: INSTRUMENT OR ENGINE CONTROL	
				FIG. 53 WTEC III DASHBOARD CABLE ASSEMBLY AND POWER DISTRIBUTION PANEL	
1	PAOFF	0FW39	12421781	WIRING HARNESS, DASH	1
2	PAFZZ	82484	596289	.CONNECTOR BODY, RECE (PX1, PX2, PX12, PX13, PX14, PX17)	6
3	PAOZZ	00779	60253-2	.TERMINAL, QUICK DISC	18
4	PAFZZ	82484	913 328	.CONNECTOR BODY, RECE (PX1A, PX2A, PX12A, PX13A, PX14A, PX17A)	6
5	PAOZZ	00779	41274	.TERMINAL, QUICK DISC	19
6	PAOZZ	81349	M43436/1-1	.BAND, MARKER	33
7	PAOZZ	81349	M43436/1-2	.BAND, MARKER	20
8	PAFZZ	71468	110238-0195	.PIN, GROOVED, HEADLES	20
9	PAFZZ	19207	12258940-4	.CONNECTOR, PLUG, ELEC	8
10	PAFZZ	11083	7N7779	.CONTACT, ELECTRICAL	20
11	PAFZZ	19207	12414260-002	.CONNECTOR BODY, RECE (PX7)	1
12	PAFZZ	11083	9G3695	.PLUG, END SEAL, ELECT	6
13	PAOZZ	81349	M43436/1-3	.BAND, MARKER	10
14	PAFZZ	71468	110-238-0446	.CONTACT, ELECTRICAL	22
15	PAOZZ	00779	3-350820-2	.TERMINAL, QUICK DISC (TL158, TL159, TL162, TL163)	4
16	PAOZZ	96906	MS25036-107	.TERMINAL, LUG (TL160, TL161)	3
17	PAOZZ	71468	031-0560-161	.SOCKET, CRIMP	45
18	PAOZZ	19207	12421842	.CONDUIT CLIP, ELECTR	1
19	PAOZZ	19207	12421839	.CONNECTOR, PLUG, ELEC (PX33)	1
20	PAOZZ	0FW39	12421836	.CAVITY PLUG, ELECTRI	40
21	PAOZZ	19207	12421841	.LOCK, CONNECTOR, ELEC	1
22	PAOZZ	19207	12421840	.CABLE SEAL, ELECTRIC	1
23	PAFZZ	19207	12420315	.CONNECTOR BODY PLUG (PX26)	1
24	PAFZZ	0FW39	12420316	.TERMINAL, QUICK DISC	6
25	PAOZZ	96906	MS25036-108	.TERMINAL, LUG	7
26	PAFZZ	09922	SM16M-1TK6	.CONTACT, ELECTRICAL	31
27	PAFZZ	09922	SMS36P-1	.CONNECTOR BODY, PLUG (J31)	1
28	PAFZZ	09922	SMS12R-1	.CONNECTOR, PLUG, ELEC (J43)	1
29	PAFZZ	09922	SC16M-1TK6	.CONTACT, ELECTRICAL	17
30	PAFZZ	09922	SC14M-1TK6	.CONTACT, ELECTRICAL	7
31	PAFZZ	11083	7N9738	.CONNECTOR BODY, PLUG	4
32	PAFZZ	19207	12419947	.CONNECTOR, PLUG, ELEC (PX15)	1
33	PAFZZ	14933	87096-012	.CONNECTOR BODY, PLUG (J19)	1
34	PAFZZ	00779	350550-6	.CONTACT, ELECTRICAL	31
35	PAFZZ	00779	350923-6	.TERMINAL, LUG	3
36	PAFZZ	037Z3	87097-012	.CONNECTOR BODY, PLUG (P18)	1
37	PAFZZ	19207	12420915-003	.CONTACT, ELECTRICAL (J2)	14
38	PAFZZ	03956	1805607-40	.CONNECTOR BODY, RECE (P912)	2
39	PAFZZ	58536	A-A-55464-07	.CONNECTOR BODY, PLUG (J913)	1
40	PAOZZ	96906	MS25036-112	.TERMINAL, LUG (TL152, TL153, TL501) D	3
41	PAOZZ	19207	12421845	.BACKSHELL, STRAIN RE	1
42	PAOZZ	19207	12421844	.CONNECTOR, RECEPTACL (J117)	1

(1) ITEM NO	(2) SMR CODE	(3) FSCM	(4) PART NUMBER	(5) DESCRIPTION AND USABLE ON CODE (UOC)	(6) QTY
43	PAOZZ	19207	12421847	.CONTACT, PIN, ELECTRI	4
44	PAOZZ	19207	12421846	.CAP, CONNECTOR, ELECT	1
45	PAOZZ	11139	114017	.PLUG, END SEAL, ELEC	2
46	PAFZZ	09922	SMS18R-1	.CONNECTOR BODY, RECE (J27)	1
47	PAFZZ	09922	SMS18P-1	.CONNECTOR BODY, RECE (J51)	1
48	PAFZZ	09922	SM14M-1TK6	.CONTACT, ELECTRICAL	8
49	PAFZZ	14933	87097-006	.CONNECTOR BODY, PLUG	1
50	PAOZZ	96906	MS25036-150	.TERMINAL, LUG (TL190)	1
51	PAFZZ	96906	MS27142-3	.CONNECTOR, PLUG, ELEC (P65)	1
52	PAOZZ	77060	12048074	.TERMINAL, QUICK DISC	6
53	PAFZZ	77060	12059168	.ITEM, SPECIAL	2
54	PAFZZ	19207	12417678	.CONNECTOR, PLUG, ELEC (J111)	1
55	PAFZZ	58536	A-A-55463-03	.CONNECTOR BODY, RECE (J2)	1
56	PAFZZ	09769	350922-6	.CONTACT, ELECTRICAL	3
57	PAFZZ	71468	CA3108E16-10S-F8 0	.CONNECTOR, PLUG, ELEC (PX20)	1
58	PAOZZ	0FW39	12421838	.CONNECTOR ELECTRICA (P115, 116)	2
59	PAOZZ	0FW39	12421834	.SEAL, CONNECTOR, ELEC	2
60	PAOZZ	19207	12421832-002	.RETAINER, ELECTRICAL	1
61	PAOZZ	19207	12421837	.STRAIN RELIEF, ELECT	2
62	PAOZZ	19207	12421833	.CONNECTOR, PLUG	2
63	PAOZZ	19207	12421832-001	.RETAINER, ELECTRICAL	1
64	PAOZZ	11873	10613-64004	.TERMINAL BLOCK, ELEC	1
65	PAOZZ	74025	10476-103	.TERMINAL, QUICK DISC	81
66	PAOZZ	65664	SPHS-224-9	.SPACER, SLEEVE	2
67	PAOZZ	65664	SPHS-274-9	.SPACER, SLEEVE	2
68	PAOZZ	96906	MS15795-847	.WASHER, FLAT	2
69	PAOZZ	96906	MS35338-137	.WASHER, LOCK NO. 8	2
70	PAOZZ	96906	MS35649-284	.NUT, PLAIN, HEXAGON 5/32-32	2
71	PAOZZ	0FW39	12420555	.COVER, TERMINAL BOAR	1
72	PAOZZ	00779	42844-1	.TERMINAL, QUICK DISC	2
73	PAOZZ	56501	RA257	.TERMINAL, QUICK DISC	6
74	PAOZZ	96906	MS35649-262	.NUT, PLAIN, HEXAGON 1/8 X 32	2
75	PAOZZ	96906	MS35335-30	.WASHER, LOCK NO. 6	2
76	PAOZZ	11873	15195	.TERMINAL BLOCK, ELEC	1
77	PAOZZ	19207	12417650	.PANEL, POWER DISTRIB	1
78	PAOZZ	96906	MS35307-303	.SCREW, CAP, HEXAGON H 1/4-20 X 1/2	6
79	PAOZZ	96906	MS27183-52	.WASHER, FLAT 9/32	6
80	PAOZZ	96906	MS51492-03	.SCREW, MACHINE #6-32 X 3/4	2
81	PAOZZ	2E480	100760	.PANEL, POWER DISTRIB	1
82	PAOZZ	96906	MS35335-61	.WASHER, LOCK 1/4	7
83	PAOZZ	96906	MS35649-2254	.NUT, PLAIN, HEXAGON 1/4 X 16	6
84	PAOZZ	19207	12414262	.CONNECTOR, RECEPTACL (PX21)	1
85	PAOZZ	96906	MS51957-55	.SCREW, MACHINE #8-32 X 2 1/2	2
86	PAOZZ	19207	12420937-006	.CIRCUIT BREAKER (CB20, CB67, CB80)	3
87	PAOZZ	19207	12420937-003	.CIRCUIT BREAKER, MAN	8
88	PAOZZ	19207	12420937-004	.CIRCUIT BREAKER	9

(1) ITEM NO	(2) SMR CODE	(3) FSCM	(4) PART NUMBER	(5) DESCRIPTION AND USABLE ON CODE (UOC)	(6) QTY
89	PAOZZ	19207	12420937-005	.CIRCUIT BREAKER (CB36, CB37, CB38, CB70)	4
90	PAOZZ	19207	12420937-002	.CIRCUIT BREAKER (CB54, CB65, CB66, CB73)	4
91	PAOZZ	19207	12420938-004	.CIRCUIT BREAKER (CB78)	1
92	PAOZZ	19207	12414270-001	.RELAY, ELECTROMAGNET (K2, K6, K7, K13, K20, K27-31)	10
93	PAOZZ	19207	12418342	.SEMICONDUCTOR DEVIC (D1, D2, D3)	3
94	PAOZZ	77342	VF4-15H11-S05	.RELAY, ELECTROMAGNET (K11, K19, K24, K53)	5
95	PAOZZ	19207	12414270-002	.RELAY, ELECTROMAGNET (K1, K32)	5
96	PAOZZ	77342	VF4-15F11-S05	.RELAY, ELECTROMAGNET (K8, K9, K10, K52)	4
97	PAOZZ	96906	MS25036-157	.TERMINAL, LUG	2
98	PAOZZ	96906	MS35307-308	.SCREW, CAP, HEXAGON H 1/4-20 X 5/8	1
99	PAOZZ	96906	MS25036-113	.TERMINAL, LUG	7
100	PAOZZ	96906	MS25036-109	.TERMINAL, LUG	1
101	PAOZZ	96906	MS35335-62	.WASHER, LOCK 5/16	2
102	PAOZZ	96906	MS35307-334	.BOLT, MACHINE 5/16-18 X 1	2
103	PAOZZ	19207	12419927-002	.CONTACT ASSEMBLY, EL	1
104	PAOZZ	0FW39	12419928-001	.TERMINAL, QUICK DISC (K25, K26, K34, K37)	4
105	PAOZZ	2E480	75588	.INSULATOR	1
106	PAOZZ	19207	12419927-003	.CONTACT ASSEMBLY, EL	2
107	PAOZZ	2E480	75572	.INSULATOR	2
108	PAOZZ	2E480	59056	.CLIP, RETAINING	120
109	PAOZZ	2E480	59099	.CLIP, RETAINING	33
110	PAOZZ	2E480	59158	.POLARIZING KEY, ELEC	13
111	PAOZZ	19207	12419928-002	.TERMINAL, QUICK DISC	89
112	PAOZZ	2E480	30521	.TERMINAL, QUICK DISC	32
113	PAOZZ	2E480	23433	.TERMINAL, QUICK DISC	33
114	PAOZZ	19207	12419928-006	.TERMINAL, QUICK DISC	6
115	PAOZZ	19207	12419928-008	.TERMINAL, QUICK DISC	7

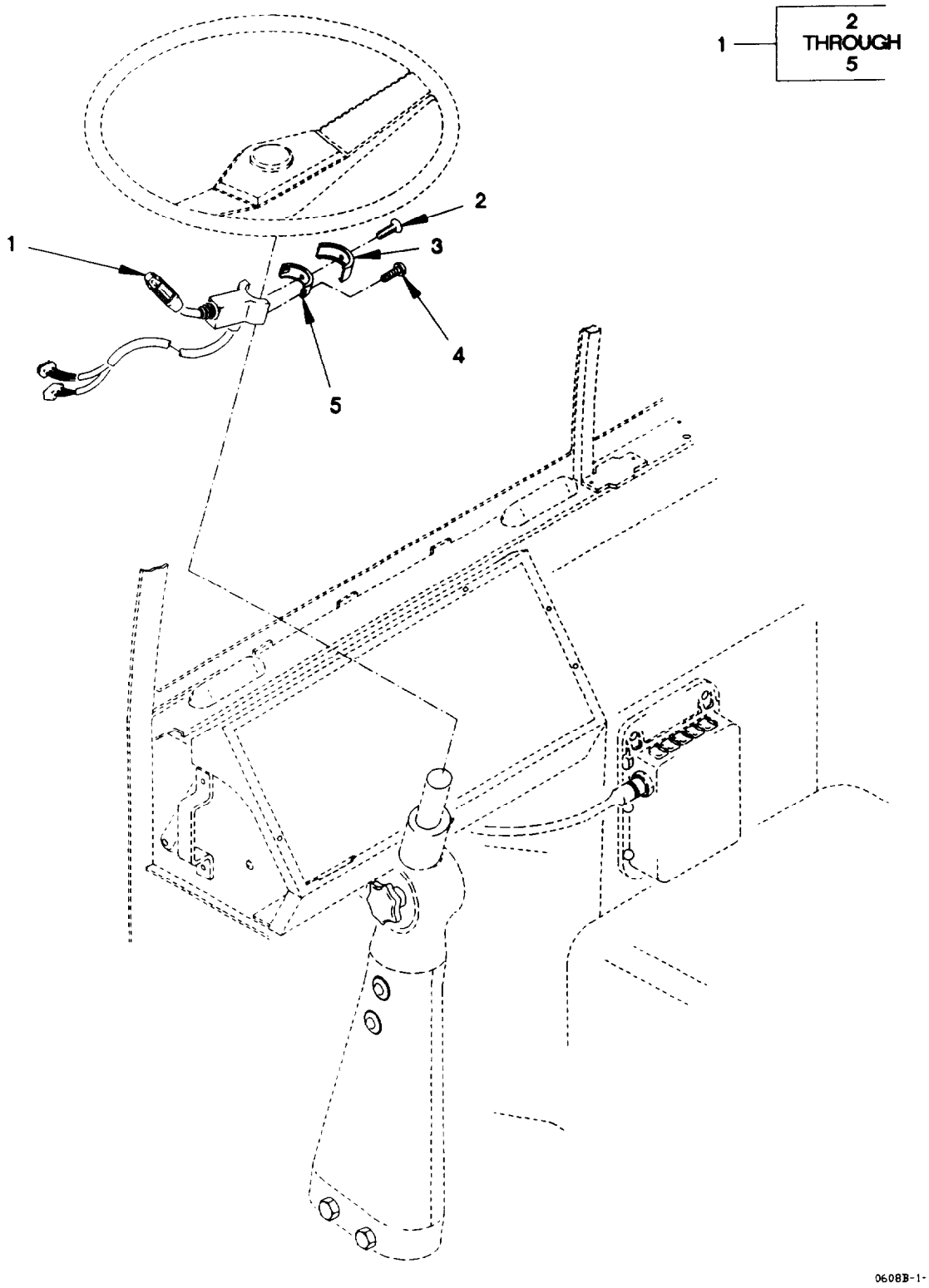

Figure 54. Turn Signal Control

(1) ITEM NO	(2) SMR CODE	(3) FSCM	(4) PART NUMBER	(5) DESCRIPTION AND USABLE ON CODE (UOC)	(6) QTY
				GROUP 0608: MISCELLANEOUS ITEMS FIG. 54 TURN SIGNAL CONTROL	
1	PAOOO	82484	E-003-036	CONTROL, DIRECTIONAL	1
2	PAOZZ	31550	511357-46	.SCREW, MACHINE M3 X.5 X 4.0	1
3	XDOZZ	82484	288.528	.COVER, DUST	1
4	PAOZZ	80204	B1831DH040016N	.SCREW, CAP, SOCKET, HE M4 X .7 X 16	2
5	XDOZZ	82484	288.457	.BRACKET, MOUNT	1
				END OF FIGURE	

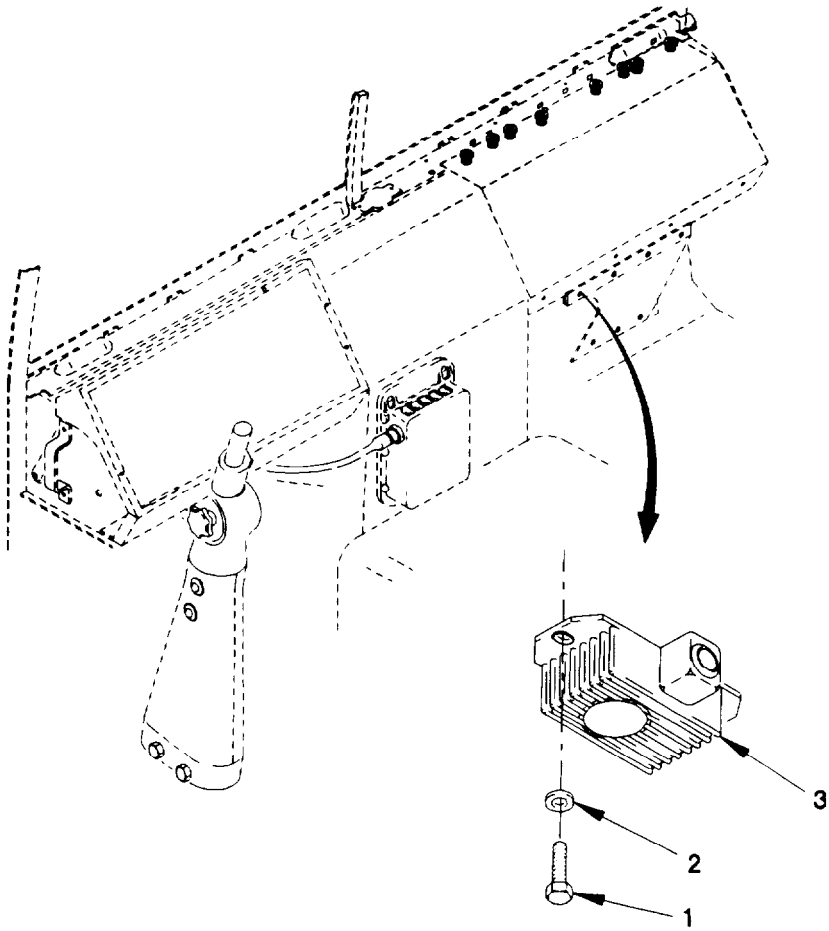

0608M-1-

Figure 55. Flasher Unit

(1) ITEM NO	(2) SMR CODE	(3) FSCM	(4) PART NUMBER	(5) DESCRIPTION AND USABLE ON CODE (UOC)	(6) QTY
				GROUP 0608: MISCELLANEOUS ITEMS FIG. 55 FLASHER UNIT	
1	PAOZZ	15526	933-M6X12	SCREW, CAP, HEXAGON H M6 X 1 X 12	2
2	PAOZZ	19200	12524631-1	WASHER, FLAT M6	2
3	PAOZZ	32498	1000B-1	FLASHER, SOLID STATE	1
				END OF FIGURE	

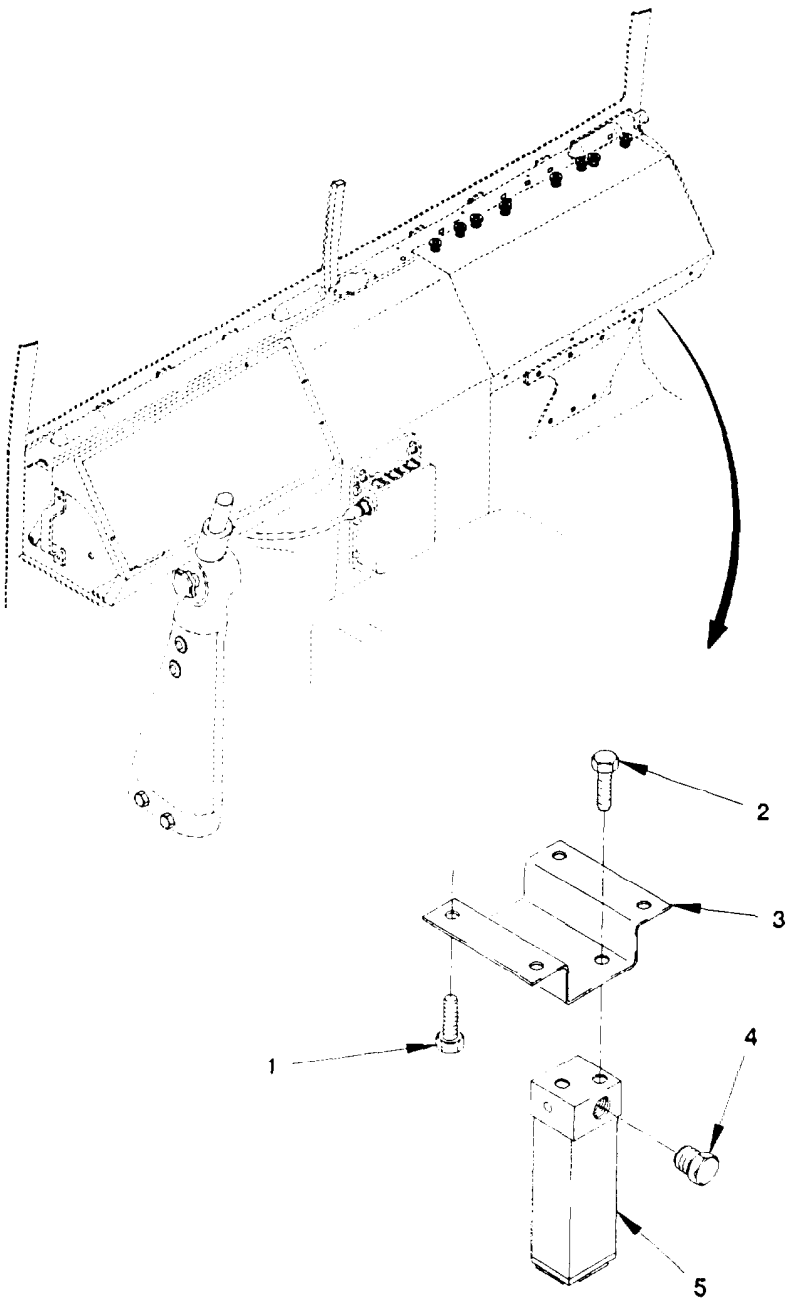

A608N-2-

Figure 56. Fan Solenoid

(1) ITEM NO	(2) SMR CODE	(3) FSCM	(4) PART NUMBER	(5) DESCRIPTION AND USABLE ON CODE (UOC)	(6) QTY
				GROUP 0608: MISCELLANEOUS ITEMS FIG. 56 FAN DIFFERENTIAL LOCK SOLENOID	
1	PAOZZ	19207	12414419-054	SCREW, CAP, HEXAGON H M5 X .8 X 6	4
2	PAOZZ	19207	12414419-055	SCREW, CAP, HEXAGON H M5 X 0.8 X 8	2
3	PAOZZ	19207	12417379	BRACKET, MULTIPLE AN	1
4	PAOZZ	81343	2-130109NS	PLUG, PIPE	1
5	PAOZZ	19207	12417630	VALVE, SOLENOID, FAN CLUTCH	1
				END OF FIGURE	

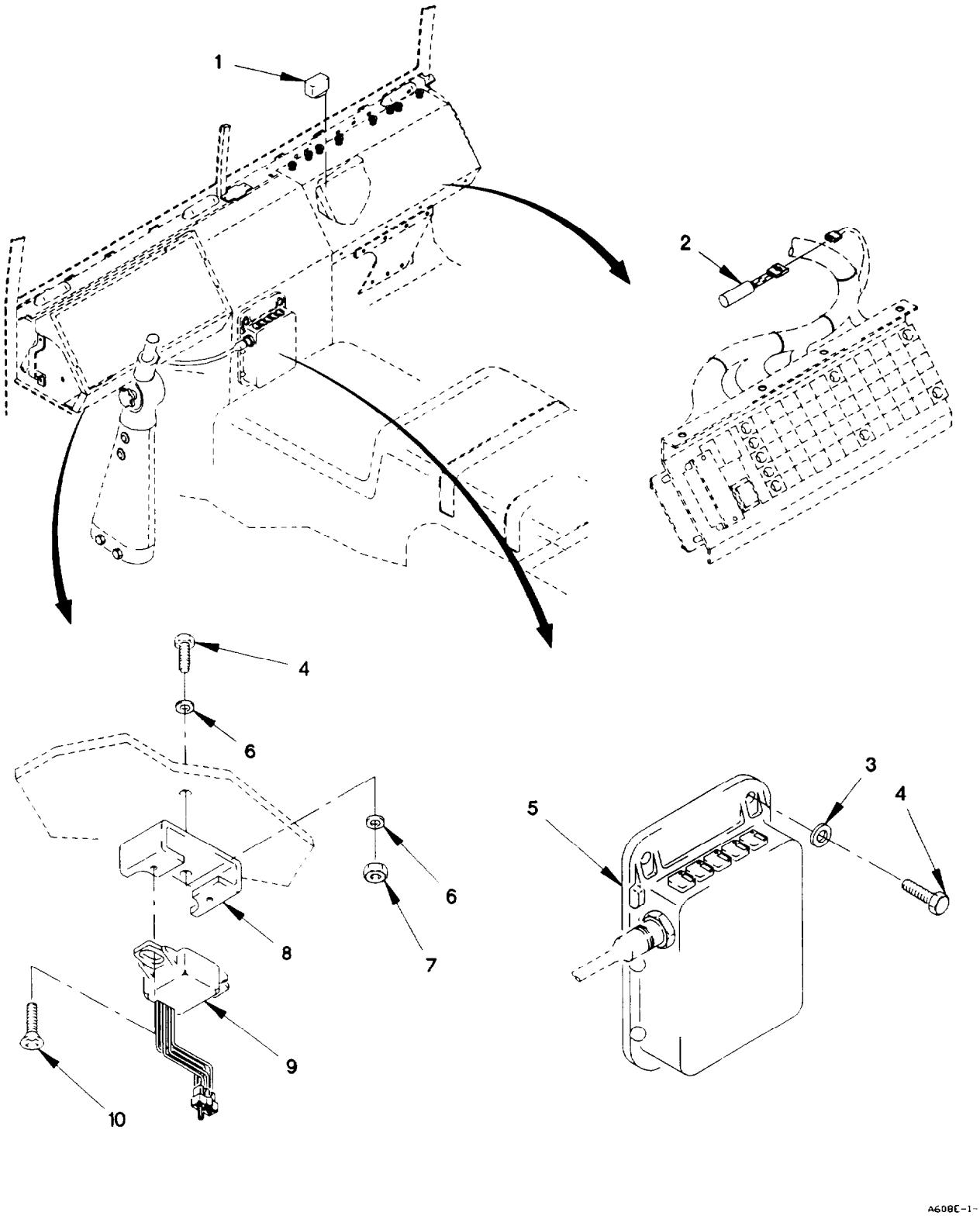

Figure 57. CTIS ECU, ECU Dimmer Module, and Frequency ECU

(1) ITEM NO	(2) SMR CODE	(3) FSCM	(4) PART NUMBER	(5) DESCRIPTION AND USABLE ON CODE (UOC)	(6) QTY
				GROUP 0608: MISCELLANEOUS ITEMS FIG. 57 CTIS ECU, ECU DIMMER MODULE, AND FREQUENCY ECU	
1	PAOZZ	1CW22	95505	RELAY, ELECTROMAGNET	1
2	PAOZZ	19207	12421174	RESISTOR, FIXED, FILM	1
3	PAOZZ	19200	12524631-1	WASHER, FLAT M6	3
4	PAOZZ	15526	DIN933-M6X16-8.8 -A4C	SCREW, CAP, HEXAGON H M6 X 1 X 16	3
5	PAOZZ	52304	673204	MODULATOR ASSEMBLY, UNIT, CTIS	1
6	PAOZZ	19207	12417975-006	SPACER, RING 6.4MM ID, 18MM OD, 6MM THD DIA	4
7	PAOZZ	19207	12414474-010	NUT, PLAIN, HEXAGON M6 X 1.0	2
8	PAOZZ	19207	12420264	BRACKET, MOUNTING	1
9	PAOZZ	19207	12378784	VOLTAGE REGULATOR S	1
10	PAOZZ	19207	12414310-044	SCREW, TAPPING M8 X 13	2
				END OF FIGURE	

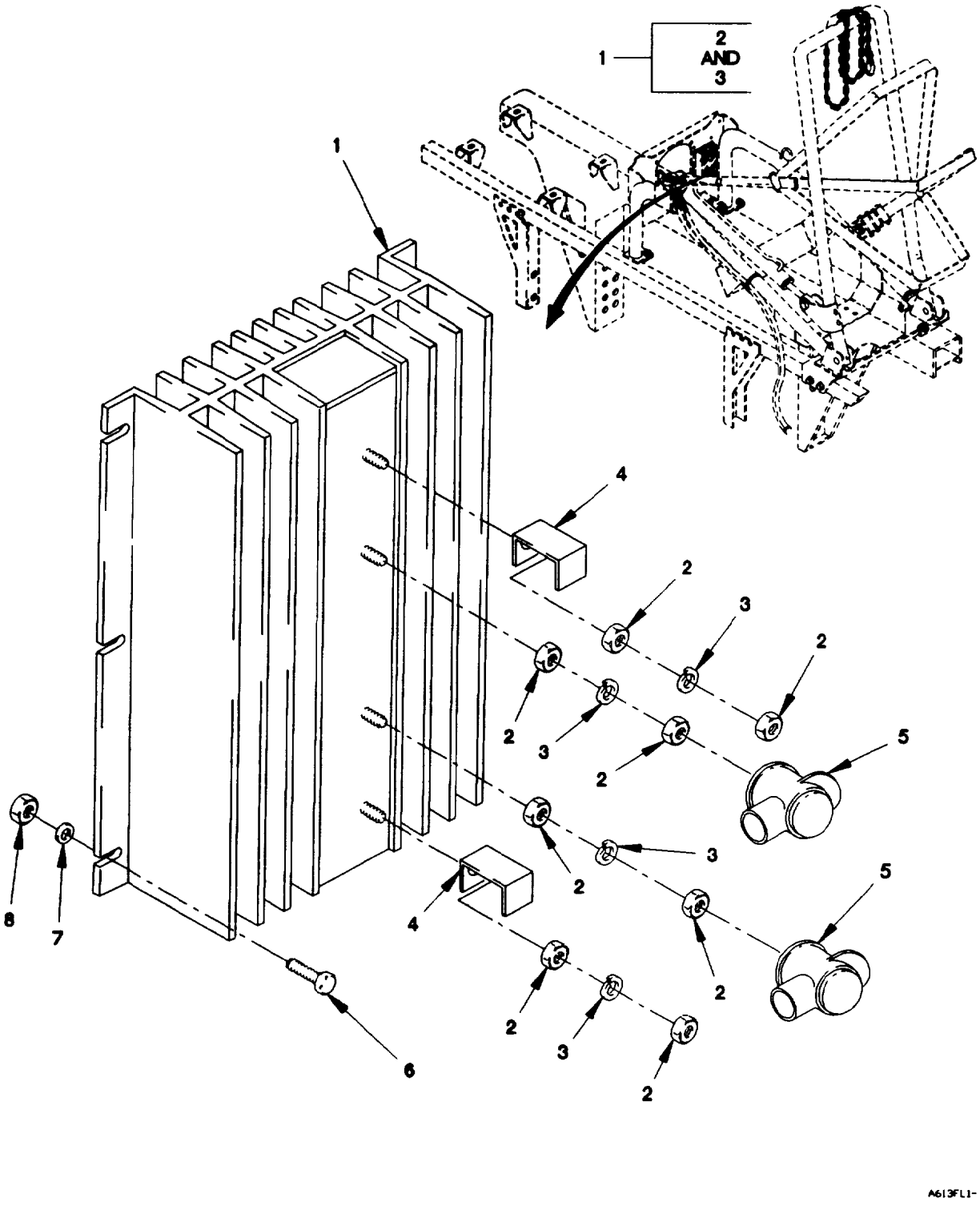

Figure 58. 100A Reverse Polarity Relay and Starter Shunt (Sheet 1 of 2)

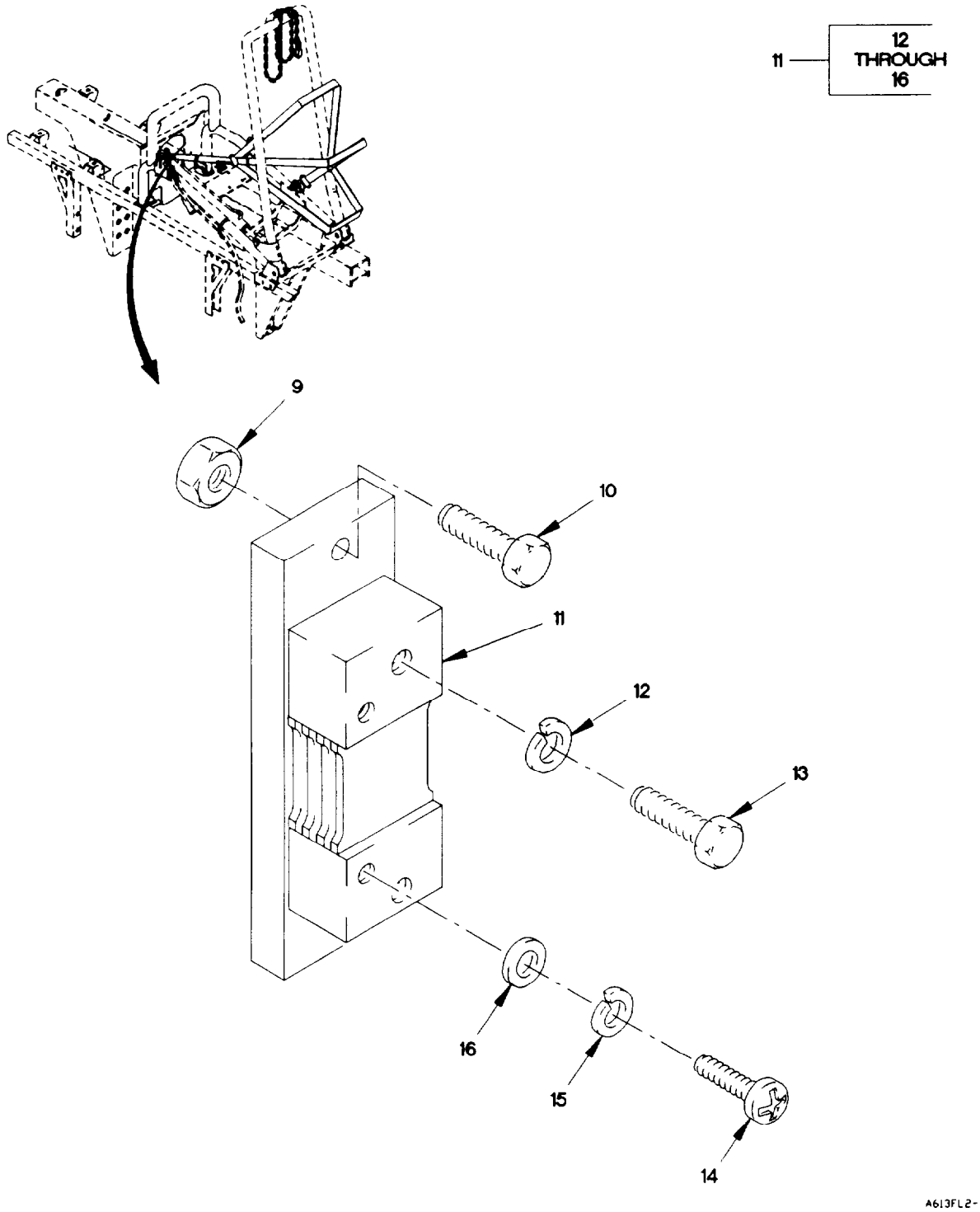

Figure 58. 100A Reverse Polarity Relay and Starter Shunt
(Sheet 2 of 2)

(1) ITEM NO	(2) SMR CODE	(3) FSCM	(4) PART NUMBER	(5) DESCRIPTION AND USABLE ON CODE (UOC)	(6) QTY
				GROUP 0608: MSICELLANEOUS ITEMS FIG. 58 100A REVERSE POLARITY RELAY AND STARTER SHUNT	
1	PAOZZ	55156	2111B	RELAY, ELECTROMAGNET	1
2	PAOZZ	1FH08	DIN555M8	.NUT, PLAIN, HEXAGON M8 X 1.25	8
3	PAOZZ	96906	MS35338-46	.WASHER, LOCK 3/8	4
4	PAOZZ	19207	12421266	COVER, TERMINAL BOAR	2
5	PAOZZ	19207	12421186-003	BELLOWS, PROTECTION	2
6	PAOZZ	19207	12414419-058	SCREW, CAP, HEXAGON H M5 X .8 X16	6
7	PAOZZ	19207	12414560-011	WASHER, SPRING TENSI M5	6
8	PAOZZ	19207	12414315-003	NUT, PLAIN, HEXAGON M5 X .8	6
9	PAOZZ	19207	12414308-002	NUT, SELF-LOCKING, EX M6 X 1	2
10	PAOZZ	64678	000933 006058	SCREW, CAP, HEXAGON H M6 X 1 X 25	2
11	PAOZZ	19207	12258937-1	SHUNT, INSTRUMENT	1
12	PAOZZ	96906	MS35338-103	.WASHER, LOCK 3/8	2
13	PAOZZ	19207	7365486	.SCREW, CAP, HEXAGON H .375-16 X 5/8	2
14	PAOZZ	96906	MS35215-53	.SCREW, MACHINE #10-32 X 3/8	2
15	PAOZZ	96906	MS35338-100	.WASHER, LOCK NO. 10	2
16	PAOZZ	96906	MS15795-908	.WASHER, FLAT NO. 10	2
				END OF FIGURE	

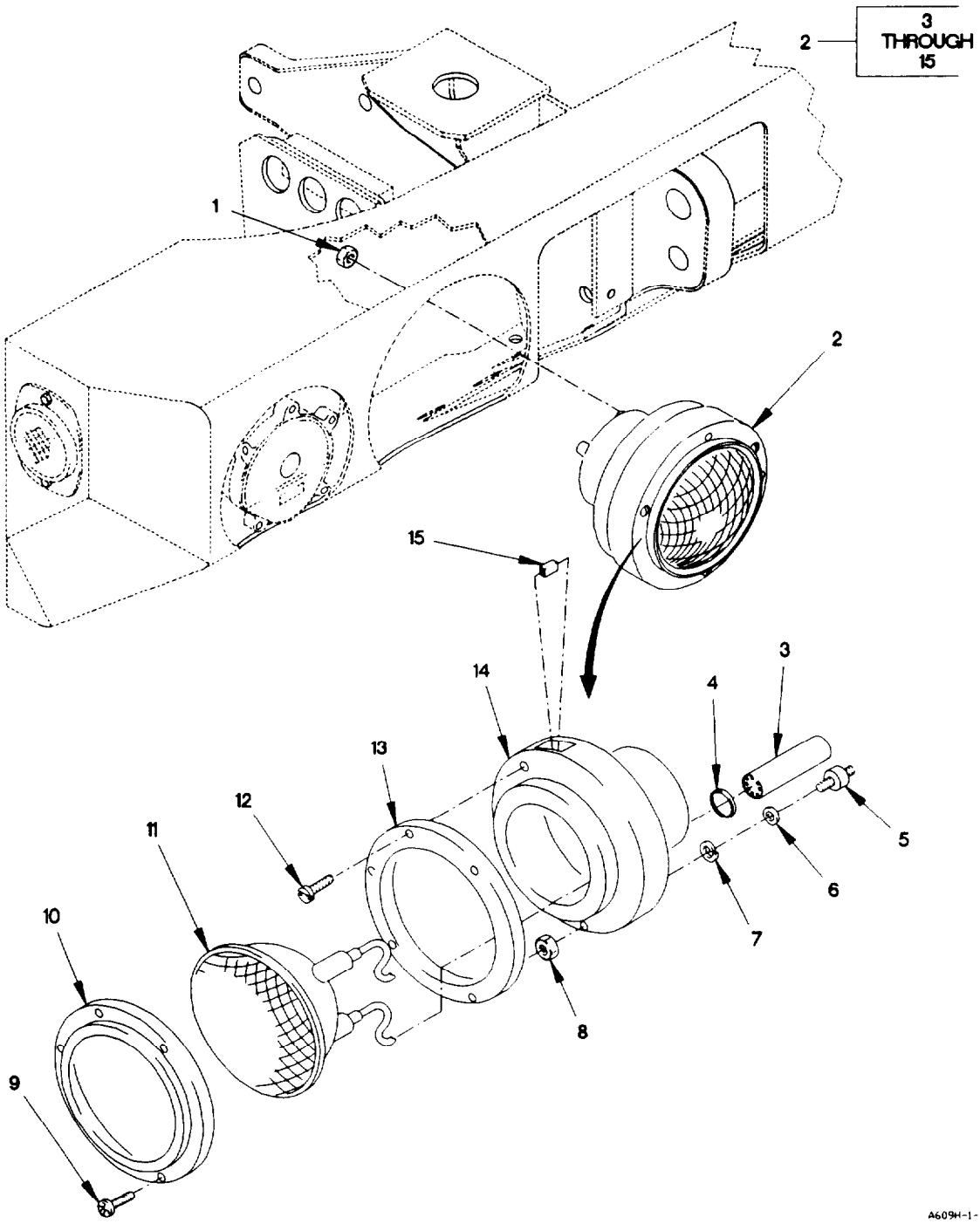

Figure 59. Headlamp Assembly

(1) ITEM NO	(2) SMR CODE	(3) FSCM	(4) PART NUMBER	(5) DESCRIPTION AND USABLE ON CODE (UOC)	(6) QTY
				GROUP 0609: LIGHTS	
				FIG. 59 HEADLAMP ASSEMBLY	
1	PAOZZ	96906	MS51968-2	NUT, PLAIN, HEXAGON 1/4-28	6
2	PAOZZ	5A910	ACC-6134	HEADLIGHT	2
3	PAOZZ	19207	8741492	.ADAPTER, CONNECTOR	3
4	PAOZZ	19207	8741442	.GROMMET, NONMETALLIC	3
5	PAOZZ	19207	8741441	.MOUNT, RESILIENT	3
6	PAOZZ	19207	5310615	.WASHER, FLAT 1/4	3
7	PAOZZ	96906	MS35338-44	.WASHER, LOCK 1/4	3
8	PAOZZ	96906	MS51968-2	.NUT, PLAIN, HEXAGON 1/4-28	3
9	PAOZZ	19207	8741437	.SCREW, EXTERNALLY RE 1/4-20 X 29/32	3
10	PAOZZ	19207	8741446	.RING, RETAINING	1
11	PAOZZ	45152	2HE692	.LAMP ASSEMBLY	1
12	PAOZZ	19207	7538146	.SCREW, EXTERNALLY RE 1/4-20 X 1 3/16	2
13	PAOZZ	19207	8741447	.RETAINER, LENS	1
14	PAOZZ	19207	8741461	.HOUSING, LIGHT	1
15	PAOZZ	19207	8741435	.NUT BLANK 7/32	2
				END OF FIGURE	

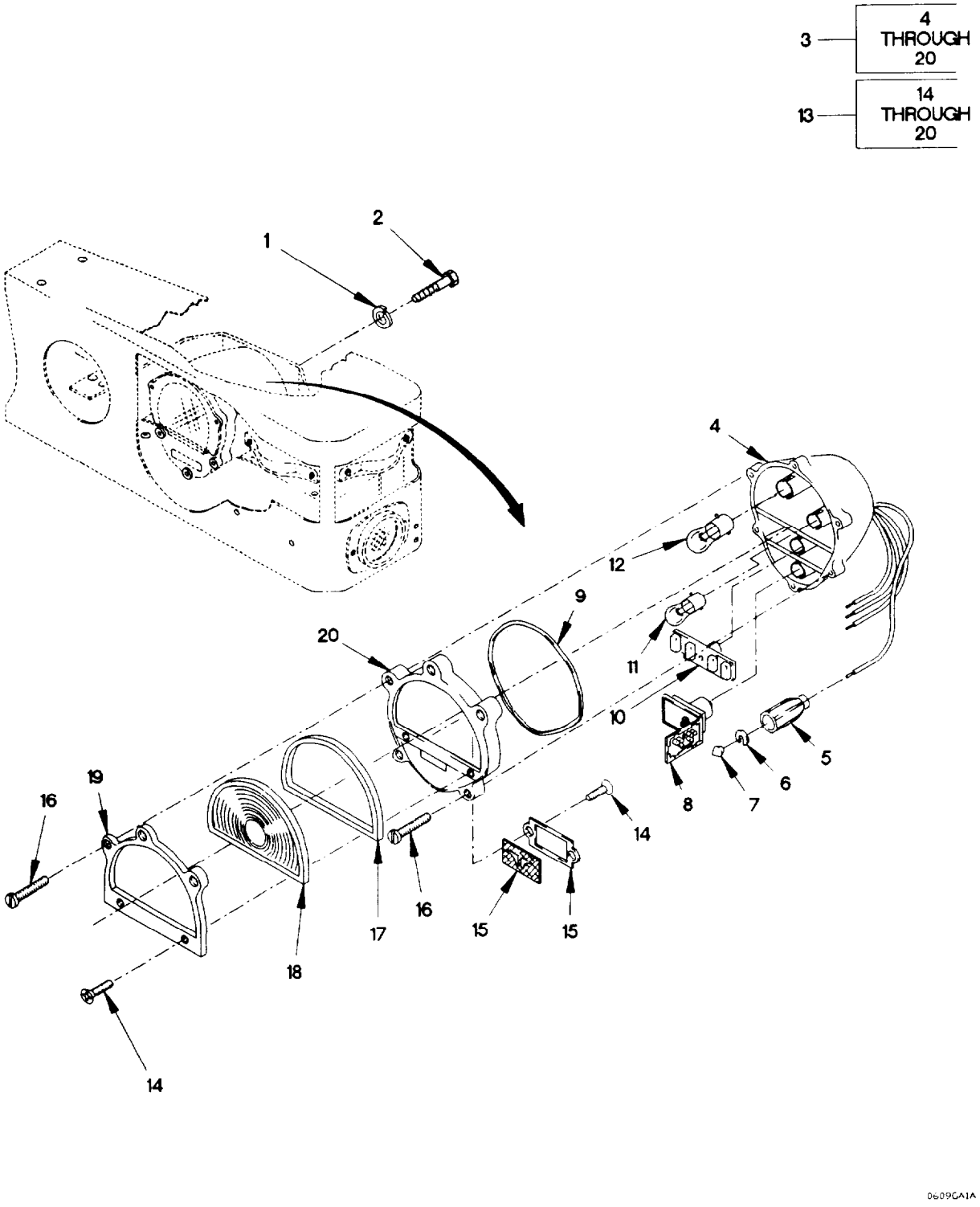

Figure 60. Composite Taillight Assembly

(1) ITEM NO	(2) SMR CODE	(3) FSCM	(4) PART NUMBER	(5) DESCRIPTION AND USABLE ON CODE (UOC)	(6) QTY
				GROUP 0609: LIGHTS	
				FIG. 60 COMPOSITE TAILLIGHT ASSEMBLY	
1	PAOZZ	19207	12414570-013	WASHER, LOCK M5.3	16
2	PAOZZ	44940	800-2010	SCREW, CAP, HEXAGON H M5 X .8 X 20	16
3	PAOZZ	96906	MS52125-1	STOP LIGHT-TAILLIGH	2
4	PAOZZ	19207	11639520	.HOUSING, LIGHT	1
5	PAOZZ	19207	8338566	.SHELL, ELECTRICAL CO	4
6	PAOZZ	19207	8338567	.WASHER, SLOTTED 6	4
7	PAOZZ	96906	MS27148-2	.CONTACT, ELECTRICAL	4
8	PAOZZ	19207	12360870-1	.STOP LIGHT, VEHICULA	1
9	PAOZZ	19207	11639519-2	.O-RING	1
10	PAOZZ	19207	12360850-2	.LIGHT, MARKER, CLEARA	1
11	PAOZZ	58536	A52463-2-13	.LAMP, INCANDESCENT	1
12	PAOZZ	81348	W-L-00111/66	.LAMP, INCANDESCENT	1
13	PAOZZ	19207	11639535	.LENS, LIGHT	1
14	PAOZZ	96906	MS35206-263	. .SCREW, MACHINE 10-24 X 1/2	4
15	PAOZZ	19207	7526015	. .LENS, LIGHT	1
16	PAOZZ	19207	7972328-1	. .SCREW, EXTERNALLY RE 7/32-24 X 1.25	5
17	PAOZZ	19207	12357897	. .RETAINER, LENS	1
18	PAOZZ	19207	11639538-1	. .LENS, LIGHT	1
19	PAOZZ	19207	12357896	. .BEZEL, INSTRUMENT MO	1
20	PAOZZ	19207	11639537	. .RETAINER, LENS	1

END OF FIGURE

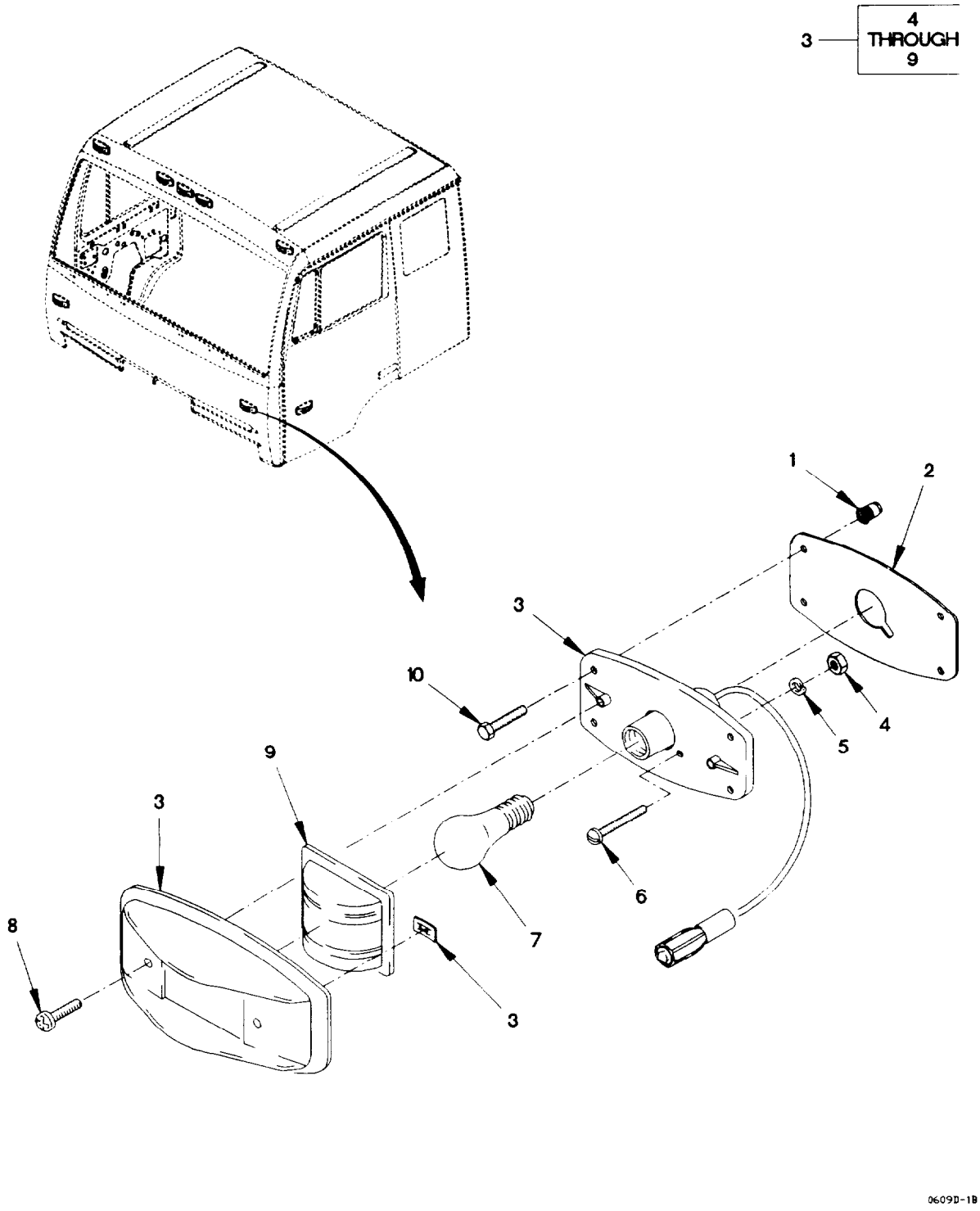

Figure 61. Cab and Door Clearance and Marker Lights

(1) ITEM NO	(2) SMR CODE	(3) FSCM	(4) PART NUMBER	(5) DESCRIPTION AND USABLE ON CODE (UOC)	(6) QTY
				GROUP 0609: LIGHTS FIG. 61 CAB AND DOOR CLEARANCE AND MARKER LIGHTS	
1	PAOZZ	84256	ALS3-470-2.0	NUT, PLAIN, KNURLED M4X. 70 (GRIP RANGE 0.5 - 2.0)	36
2	PAOZZ	0FW39	12421469	GASKET, LIGHT, MARKER CLEARANCE	9
3	PAOZZ	0FW39	12417654-003	LIGHT, MARKER, CLEARA	9
4	PAOZZ	96906	MS35649-264	.NUT, PLAIN, HEXAGON 1/8-32	1
5	PAOZZ	96906	MS35335-58	.WASHER, LOCK NO. 6	1
6	PAOZZ	96906	MS35206-233	.SCREW, MACHINE #6-31 X 7/8	1
7	PAOZZ	81348	W-L-00111/60	.LAMP, INCANDESCENT	1
8	PAOZZ	96906	MS35206-261	.SCREW, MACHINE #10-24 X .375	2
9	PAOZZ	96906	MS35421-1	.LENS, LIGHT	1
10	PAOZZ	19207	12414419-042	SCREW, MACHINE M4 X .7 X 16	36
				END OF FIGURE	

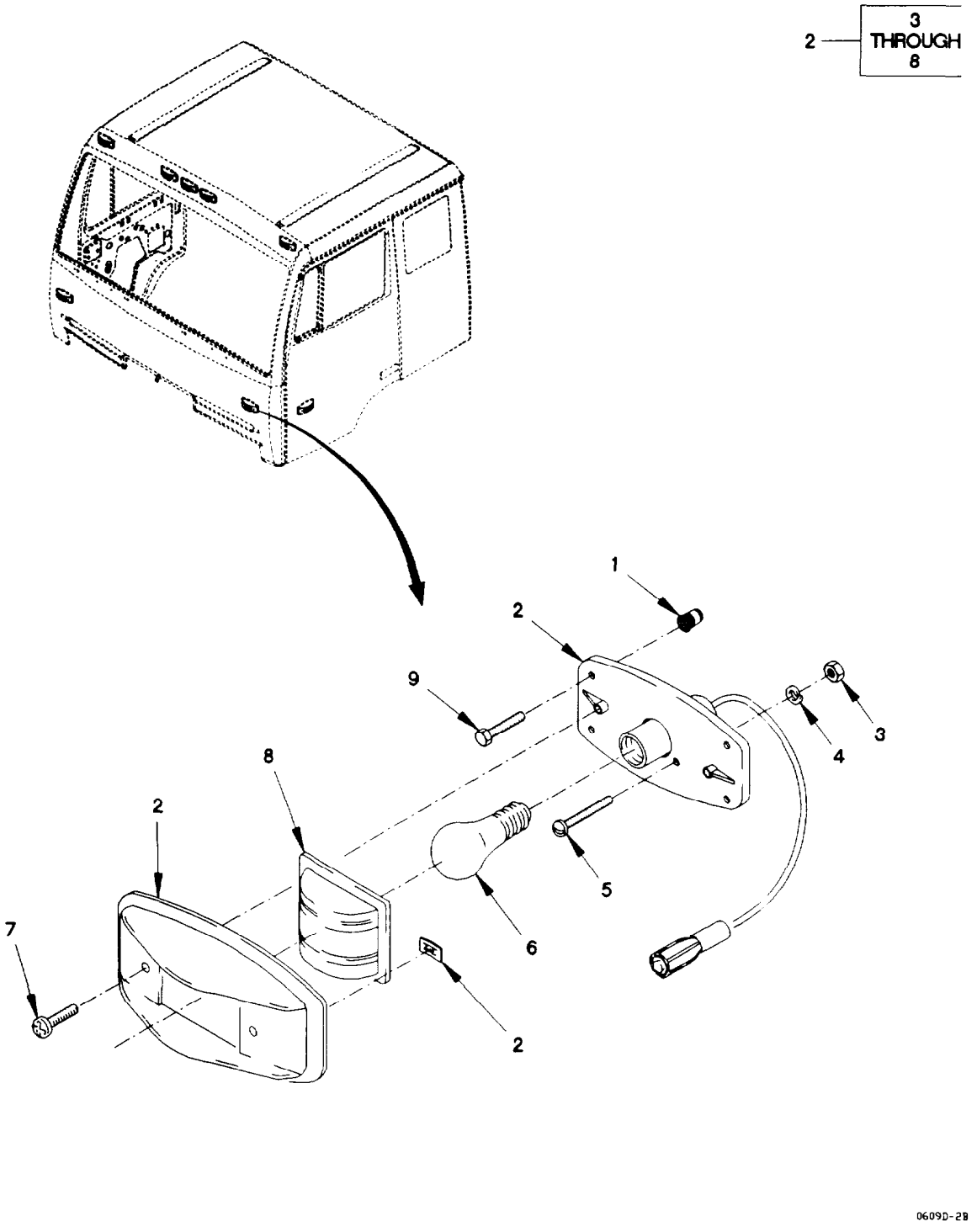

Figure 62. Chassis Clearance and Marker Lights

(1) ITEM NO	(2) SMR CODE	(3) FSCM	(4) PART NUMBER	(5) DESCRIPTION AND USABLE ON CODE (UOC)	(6) QTY
				GROUP 0609: LIGHTS	
				FIG. 62 CHASSIS CLEARANCE AND MARKER LIGHTS	
1	PAOZZ	19207	12414315-002	NUT, PLAIN, HEXAGON M4 X .7	28
2	PAOZZ	0FW39	12417654-004	LIGHT, MARKER, CLEARA	7
3	PAOZZ	96906	MS35649-264	.NUT, PLAIN, HEXAGON 1/8-32	1
4	PAOZZ	96906	MS35335-58	.WASHER, LOCK NO. 6	1
5	PAOZZ	96906	MS35206-233	.SCREW, MACHINE #6-32 X 7/8	1
6	PAOZZ	81348	W-L-00111/60	.LAMP, INCANDESCENT	1
7	PAOZZ	96906	MS35206-261	.SCREW, MACHINE #10-24 X .375	2
8	PAOZZ	96906	MS35421-2	.LENS, LIGHT	1
9	PAOZZ	19207	12414419-045	SCREW, CAP, HEXAGON H M4 X .7 X 30	28
				END OF FIGURE	

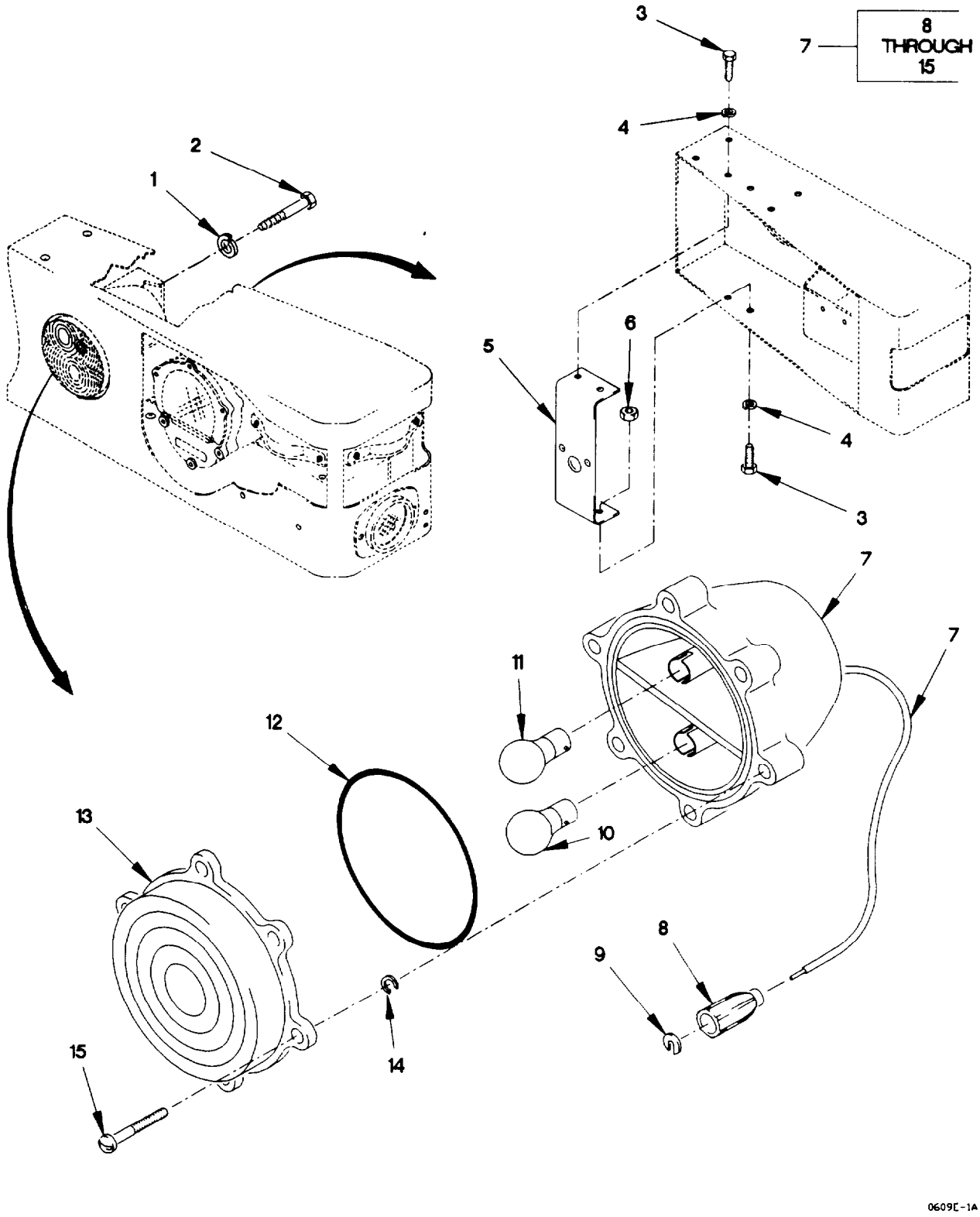

Figure 63. Backup Light

(1) ITEM NO	(2) SMR CODE	(3) FSCM	(4) PART NUMBER	(5) DESCRIPTION AND USABLE ON CODE (UOC)	(6) QTY
				GROUP 0609: LIGHTS	
				FIG. 63 BACKUP LIGHT	
1	PAOZZ	96906	MS35338-46	WASHER, LOCK 3/8	2
2	PAOZZ	80204	B1821BH038C075D	SCREW, CAP, HEXAGON H 3/8-16 X 23/32	2
3	PAOZZ	19207	12414419-112	SCREW, CAP, HEXAGON H M10 X 1.5 X 25	4
4	PAOZZ	19207	12414570-021	WASHER, LOCK M10.5	4
5	PAOZZ	19207	12419187	BRACKET, DOUBLE ANGL	1
6	PAOZZ	19207	12414315-009	NUT, SELF-LOCKING, HE M10 X 1.5	4
7	PAOZZ	5A910	AC12901	LIGHT, BACKUP	1
8	PAOZZ	19207	8338566	.SHELL, ELECTRICAL CO	1
9	PAOZZ	19207	8338567	.WASHER, SLOTTED 6	1
10	PAOZZ	58536	A52463-2-13	.LAMP, INCANDESCENT	1
11	PAOZZ	58536	A52463-2-03	.LAMP, INCANDESCENT	1
12	PAOZZ	19207	7320658	.O-RING	1
13	PAOZZ	5A910	AC-19202	.LENS, LIGHT	1
14	PAOZZ	19207	7320642	.CLIP, RETAINING	6
15	PAOZZ	19207	7320641	.SCREW, MACHINE #10-24 X 63/64	6
				END OF FIGURE	

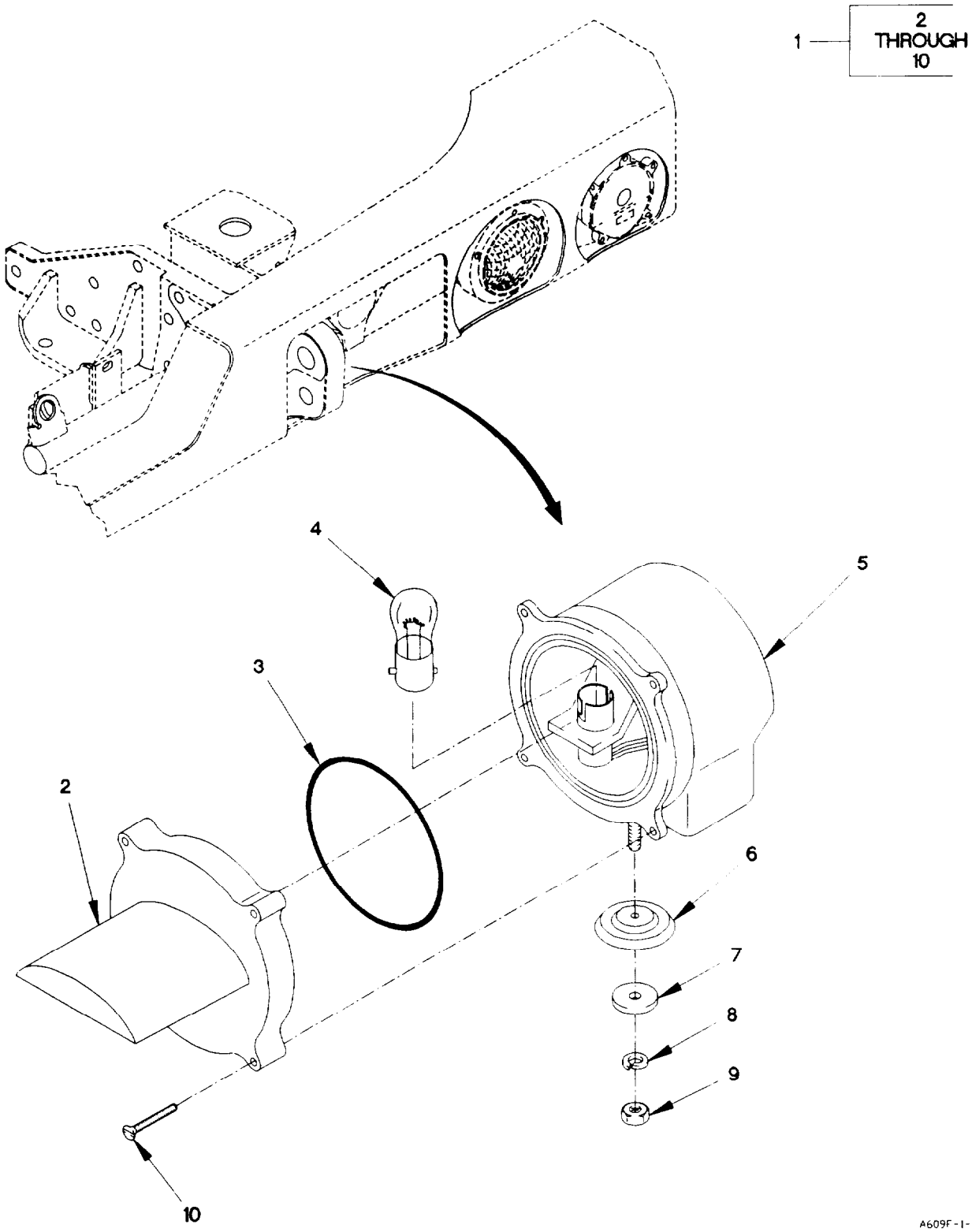

Figure 64. Blackout Drive Light

(1) ITEM NO	(2) SMR CODE	(3) FSCM	(4) PART NUMBER	(5) DESCRIPTION AND USABLE ON CODE (UOC)	(6) QTY
				GROUP 0609: LIGHTS FIG. 64 BLACKOUT DRIVE LIGHT	
1	PAOZZ	19207	12360910-2	LAMP UNIT, VEHICULAR	1
2	PAOZZ	34623	12360912	.LENS, LIGHT	1
3	PAOZZ	81349	M25988/1-246	.O-RING	1
4	PAOZZ	19207	12360840-2	.LAMP, HALOGEN	1
5	XAOZZ	19207	12360911	.HOUSING, LIGHT	1
6	PAOZZ	19207	11668979	.WASHER, LOCK 13/32	1
7	PAOZZ	56442	616G4	.WASHER, FINISHING 3/8	1
8	PAOZZ	96906	MS35338-46	.WASHER, LOCK 3/8	1
9	PAOZZ	96906	MS51967-8	.NUT, PLAIN, HEXAGON 3/8-16	1
10	PAOZZ	19207	12287561-1	.BOLT, EXTERNALLY REL 3/16-24 X 9/16	4
				END OF FIGURE	

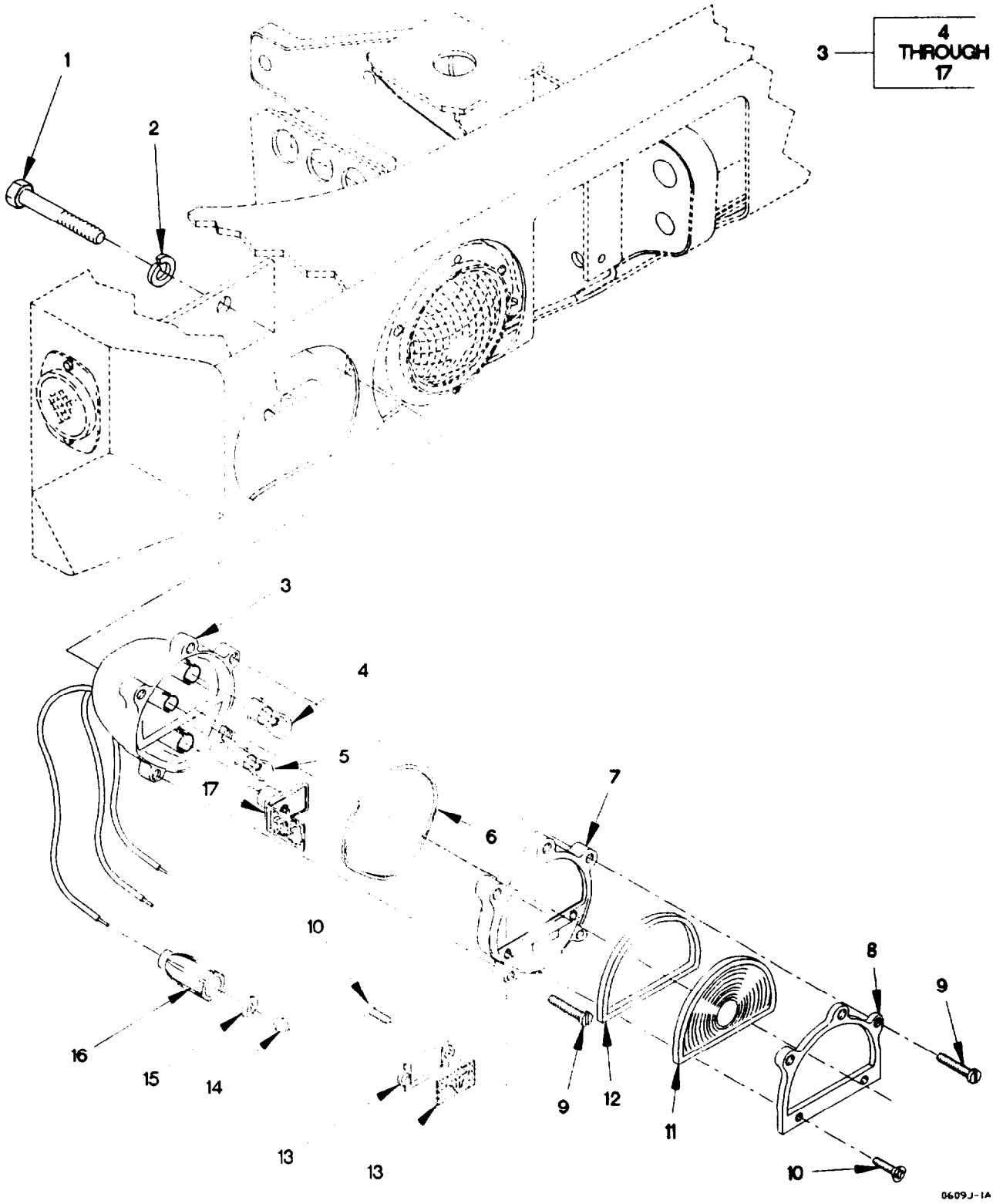

Figure 65. Composite Front Light Assembly

(1) ITEM NO	(2) SMR CODE	(3) FSCM	(4) PART NUMBER	(5) DESCRIPTION AND USABLE ON CODE (UOC)	(6) QTY
				GROUP 0609: LIGHTS	
				FIG. 65 COMPOSITE FRONT LIGHT ASSEMBLY	
1	PAOZZ	80204	B1821BH038C075D	SCREW, CAP, HEXAGON H 3/18-16 X 23/32	4
2	PAOZZ	96906	MS35338-46	WASHER, LOCK 3/8	4
3	PAOOO	96906	MS52126-1	LIGHT, PARKING	2
4	PAOZZ	81348	W-L-00111/66	.LAMP, INCANDESCENT	1
5	PAOZZ	58536	A52463-2-13	.LAMP, INCANDESCENT	1
6	PAOZZ	19207	11639519-1	.O-RING	1
7	PAOZZ	19207	11639546	.LENS, LIGHT	1
8	PAOZZ	19207	12357896	.BEZEL, INSTRUMENT MO	1
9	PAOZZ	19207	7972328-1	.SCREW, EXTERNALLY RE 7/32-24 X 1.25	5
10	PAOZZ	96906	MS35206-263	.SCREW, MACHINE 10-24 X 1/2	4
11	PAOZZ	5A910	11639538-2	.LENS, LIGHT	1
12	PAOZZ	19207	12357897	.RETAINER, LENS	1
13	PAOZZ	19207	7526015	.LENS, LIGHT	1
14	PAOZZ	96906	MS27148-2	.CONTACT, ELECTRICAL	3
15	PAOZZ	19207	8338567	.WASHER, SLOTTED 6	3
16	PAOZZ	19207	8338566	.SHELL, ELECTRICAL CO	3
17	PAOZZ	5A910	12360865-1	.LIGHT, MARKER, CLEARA	1
				END OF FIGURE	

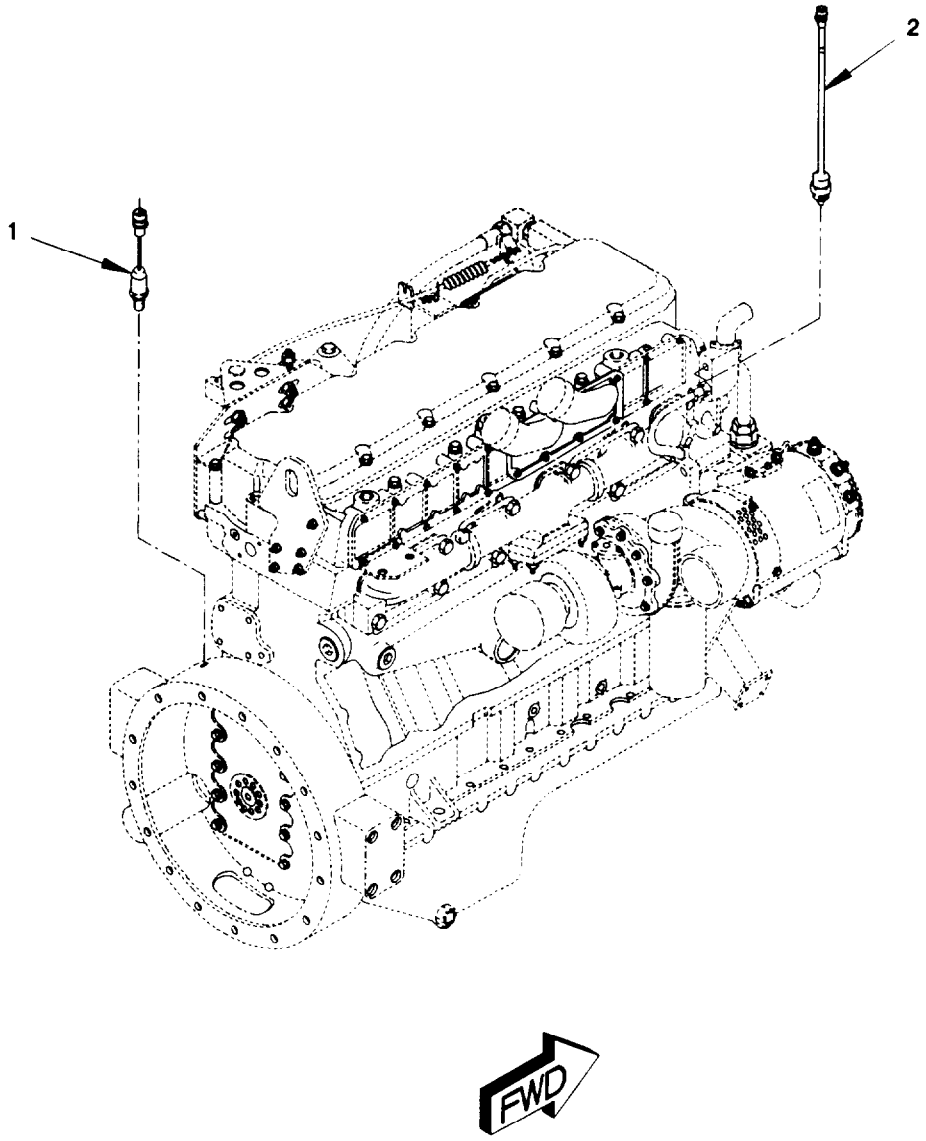

0610A-1A

Figure 66. Sensors, Switches, and Transducers (Sheet 1 of 3)

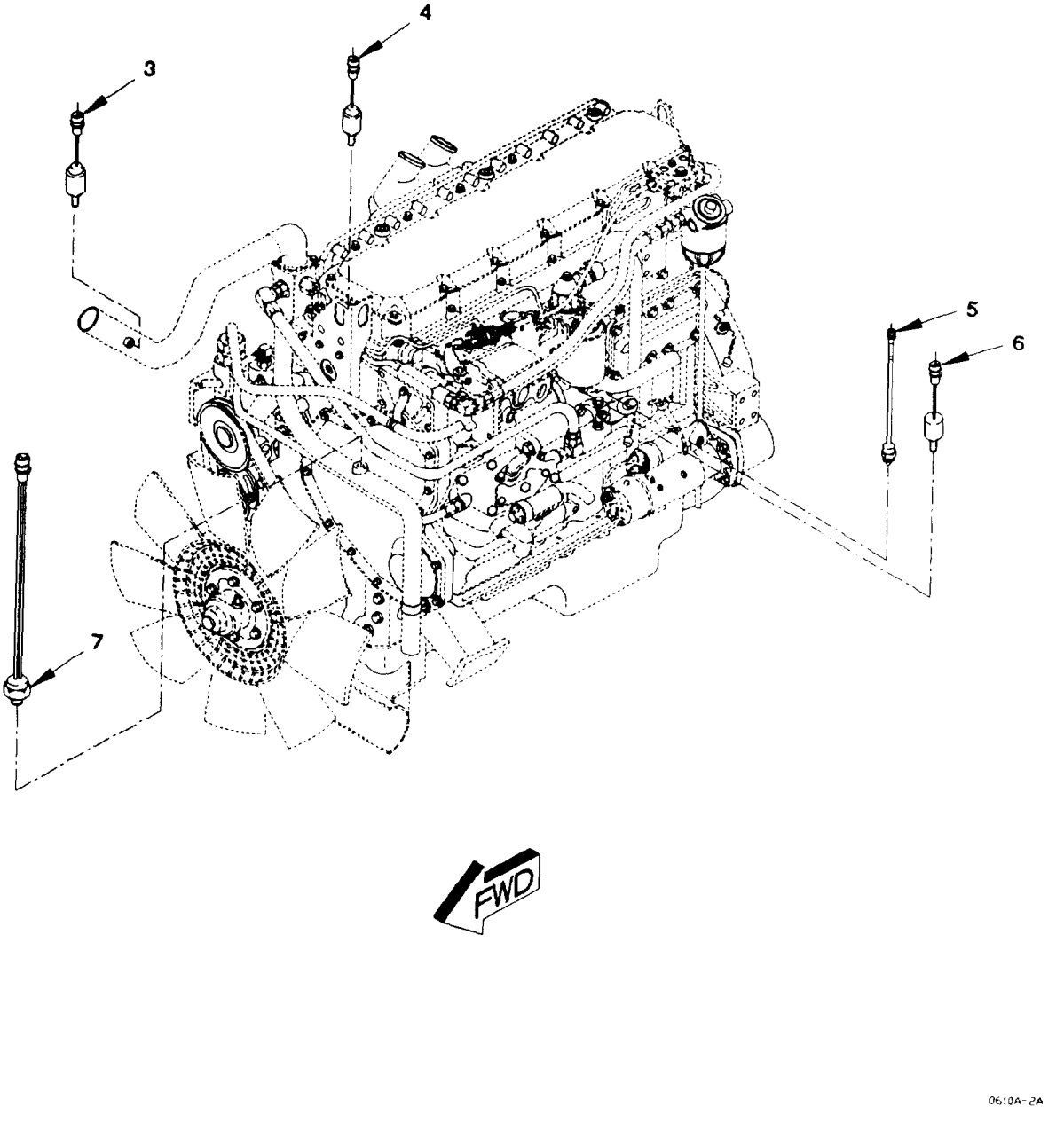

Figure 66. Sensors, Switches, and Transducers (Sheet 2 of 3)

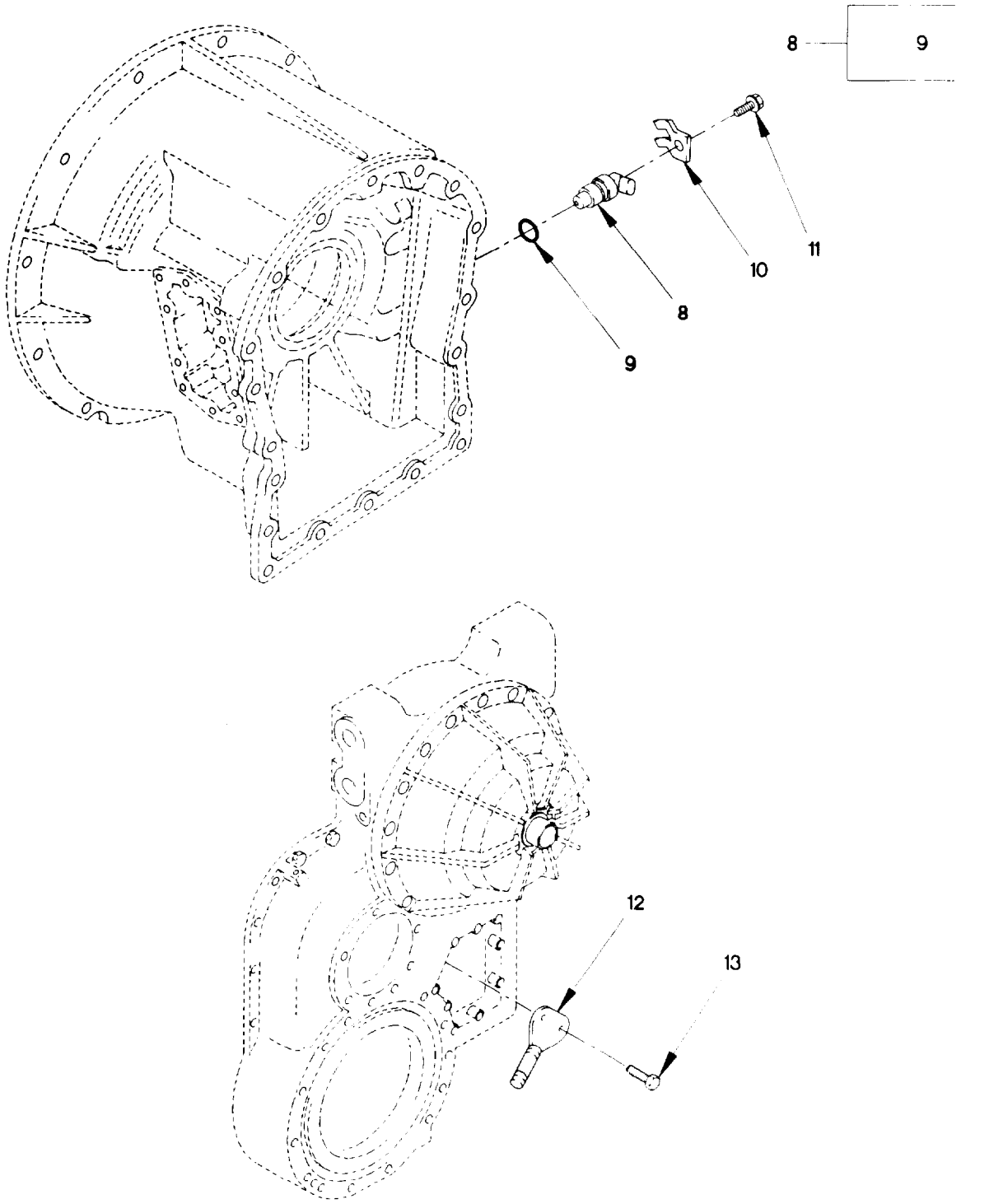

Figure 66. Sensors, Switches, and Transducers (Sheet 3 of 3)

(1) ITEM NO	(2) SMR CODE	(3) FSCM	(4) PART NUMBER	(5) DESCRIPTION AND USABLE ON CODE (UOC)	(6) QTY
				GROUP 0610: SENDING UNITS AND WARNING SWITCHES	
				FIG. 66 SENSORS, SWITCHES AND TRANSDUCERS	
1	PAOZZ	28022	101-01156-03	SWTICH, PROXIMITY ENGINE SPEED SENSOR	1
2	PAOZZ	57733	506BA	TRANSMITTER, TERMPERA COOLANT TEMPERATURE GAGE	1
3	PAOZZ	51377	1002-07950-32	SENSOR, AIR CHARGED ALARM	2
4	PAOZZ	85814	TM-9A-230R-CANNO	SWITCH, ENGINE TEMPE WATER TEMPERATURE SWITCH	1
5	PAOZZ	57733	506AZ	TRANSMITTER, PRESSUR OIL PRESSURE GAGE	1
6	PAOZZ	85814	NSM-18-12F-CANNO	SWITCH, PRESSURE OIL PRESSURE LIGHT	1
7	PAOZZ	19207	12414556	RESISTOR, THERMAL	1
8	PAOFF	73342	29509637	TRANSDUCER, MOTIONAL	1
9	PAOZZ	73342	29503383	.O-RING	1
10	PAOZZ	73342	29503843	CLIP, SPRING TENSION	1
11	PAOZZ	56161	10524332	SCREW, CAP, HEXAGON H M8 X 1.25 X 20	1
12	PAHZZ	73342	29505601	SUPPLY SUPPORT REQU	1
13	PAHZZ	56161	10501759	SCREW, CAP, HEXAGON H M8 X 1.25 X 25	2
				END OF FIGURE	

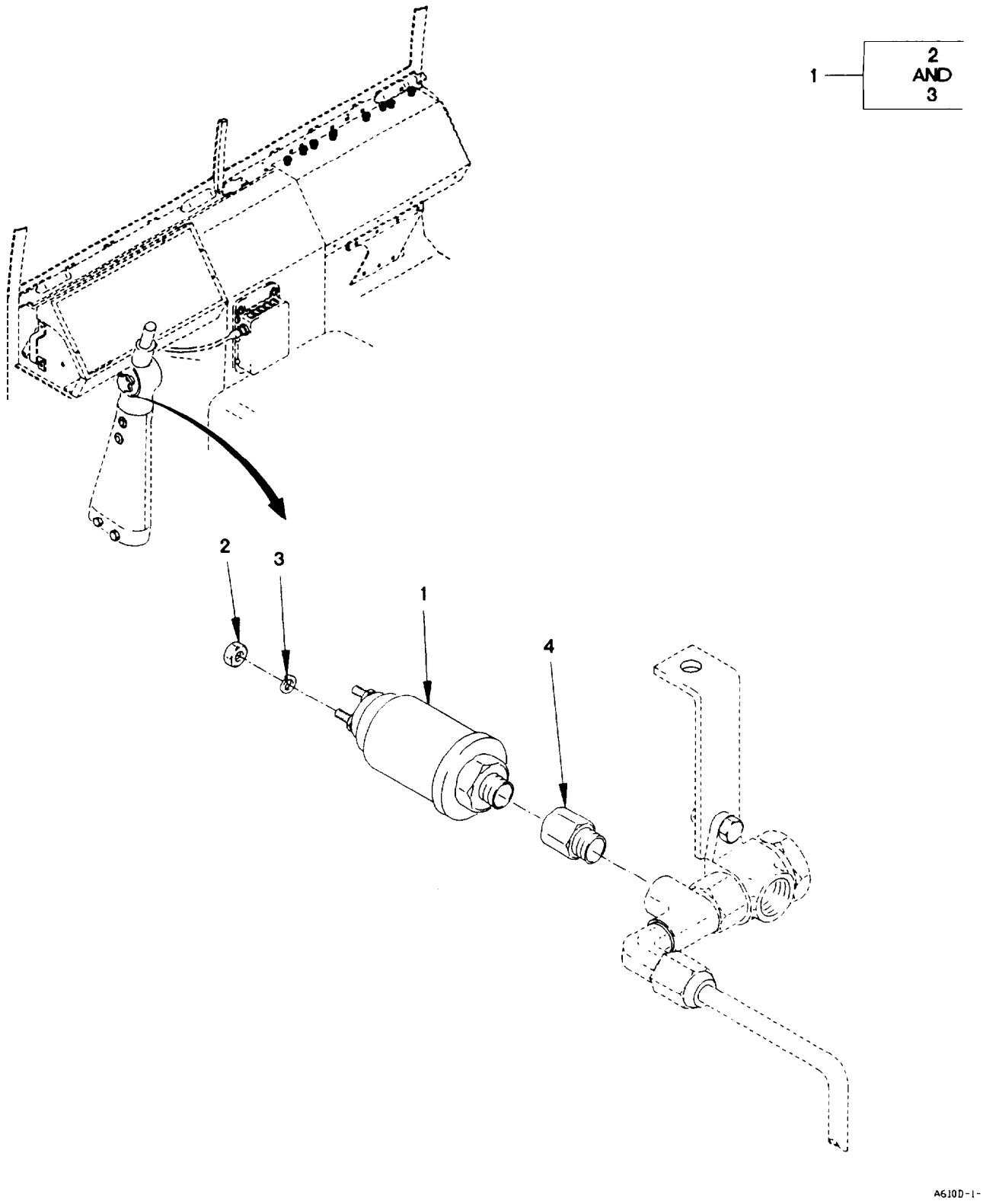

Figure 67. Air Brakes Pneumatic Switch

(1) ITEM NO	(2) SMR CODE	(3) FSCM	(4) PART NUMBER	(5) DESCRIPTION AND USABLE ON CODE (UOC)	(6) QTY
				GROUP 0610: SENDING UNITS AND WARNING SWITCHES	
				FIG. 67 AIR BRAKES PNEUMATIC SWITCH	
1	PAOZZ	59197	X57-360.367	ACTUATOR ASSEMBLY, A	2
2	PAOZZ	19207	12414315-002	.NUT, PLAIN, HEXAGON M4 X .7	2
3	PAOZZ	81349	D70336/1-20	.WASHER, LOCK 4MM	2
4	PAOZZ	0TE27	PM0616	ADAPTER, STRAIGHT, PI	2
				END OF FIGURE	

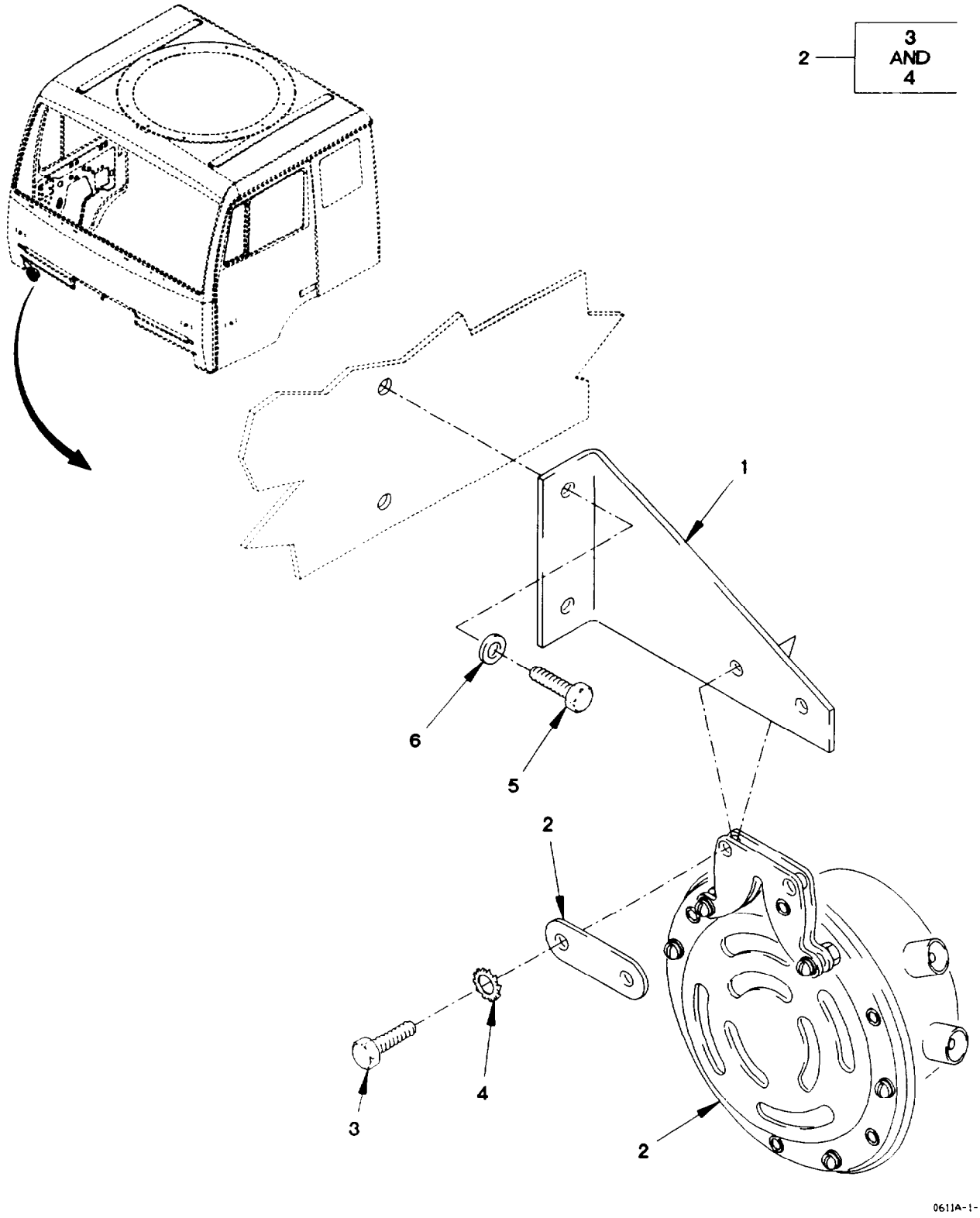

Figure 68. Horn

(1) ITEM NO	(2) SMR CODE	(3) FSCM	(4) PART NUMBER	(5) DESCRIPTION AND USABLE ON CODE (UOC)	(6) QTY
				GROUP 0611: HORN, SIREN	
				FIG. 68 HORN	
1	PAOZZ	19207	12417877	BRACKET, HORN	1
2	PAOZZ	96906	MS51074-1	HORN, ELECTRICAL (ATTACHING HARDWARE PROVIDED WITH HORN)	1
3	PAOZZ	56161	10503805	.SCREW, CAP, HEXAGON H M6 X 1 20	2
4	PAOZZ	19207	12414570-015	.WASHER, LOCK 1/4	2
5	PAOZZ	15526	933-M8X20	SCREW, CAP, HEXAGON H M8 X 1.25 X 20	2
6	PAOZZ	19207	12417975-008	WASHER, FLAT M8.4	2
				END OF FIGURE	

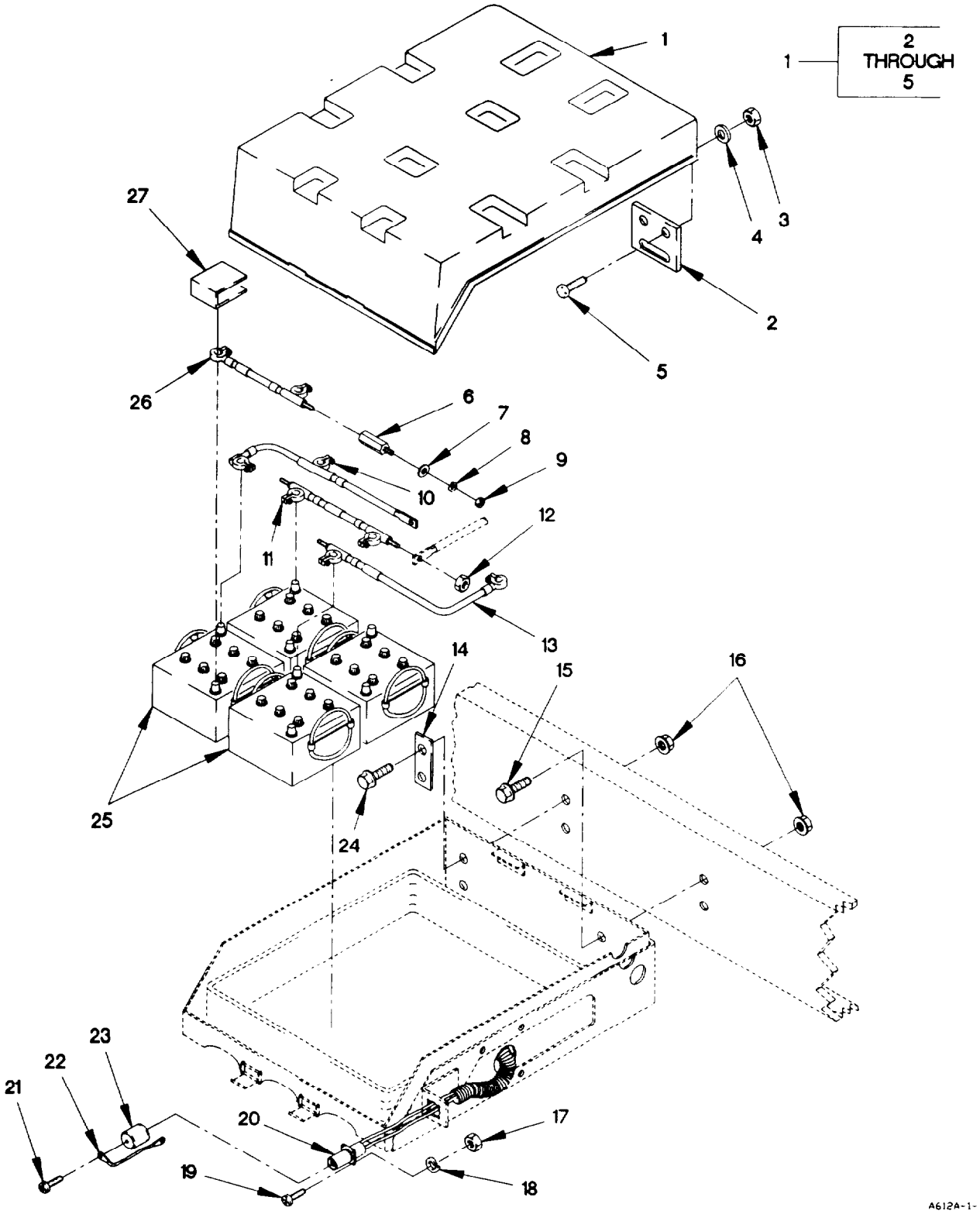

Figure 69. Batteries, Battery Box, and Cables (Sheet 1 of 3)

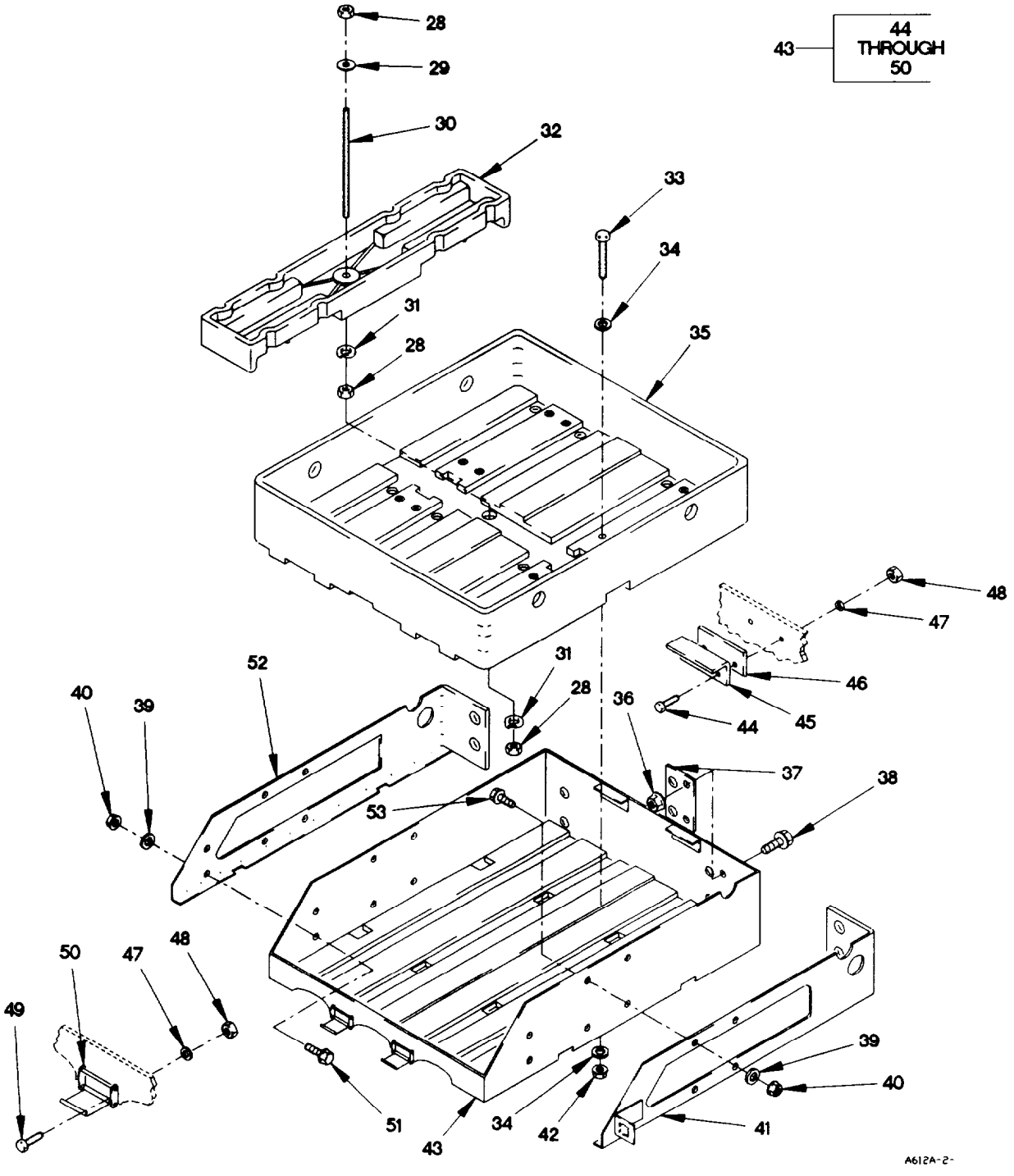

Figure 69. Batteries, Battery Box, and Cables (Sheet 2 of 3)

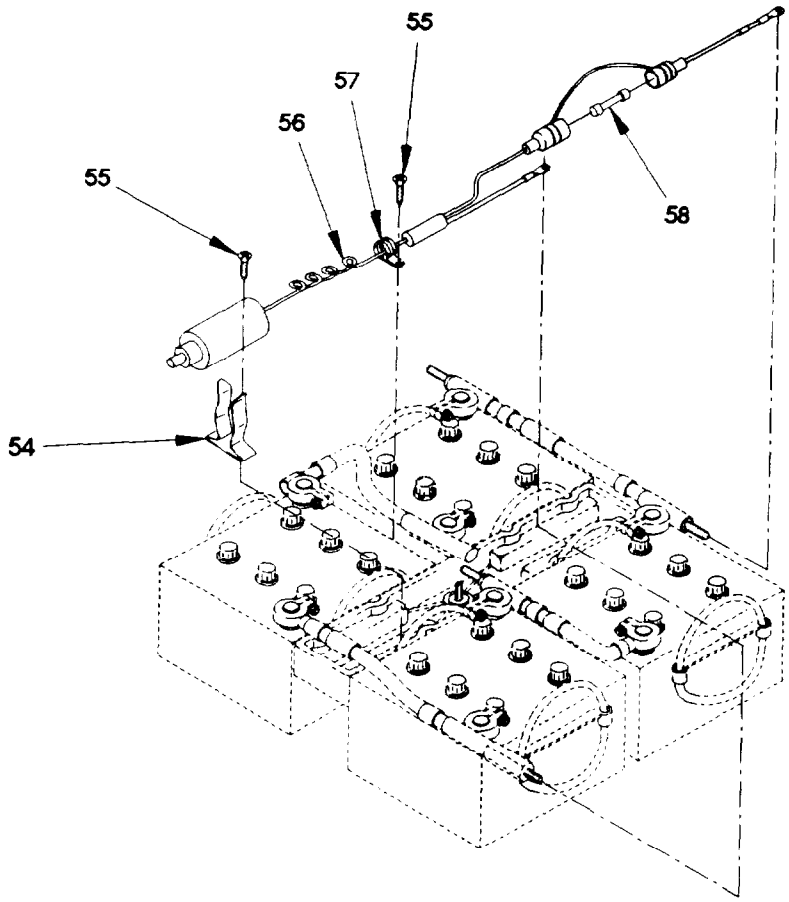

A612A-3-

Figure 69. Batteries, Battery Box, and Cables (Sheet 3 of 3)

(1) ITEM NO	(2) SMR CODE	(3) FSCM	(4) PART NUMBER	(5) DESCRIPTION AND USABLE ON CODE (UOC)	(6) QTY
				GROUP 0612: BATTERIES, STORAGE (WET OR DRY)	
				FIG. 69 BATTERIES, BATTERY BOX AND CABLES	
1	PAOZZ	19207	12420854	COVER, BATTERY BOX	1
2	PAOZZ	19207	12420087	.PLATE, MENDING	2
3	PAOZZ	19207	12412478-04	.NUT, SELF-LOCKING, HE 10-32	2
4	PAOZZ	19207	12414473-010	.WASHER, FLAT M5.5	2
5	PAOZZ	96906	MS51849-65	.SCREW, MACHINE 10-32	2
6	PAOZZ	1T176	16998	NUT, SELF-LOCKNG, HE	1
7	PAOZZ	96906	MS15795-913	WASHER, FLAT 3/8	1
8	PAOZZ	96906	MS35338-103	WASHER, LOCK 3/8	1
9	PAOZZ	96906	MS51969-3	NUT, PLAIN, HEXAGON 3/8-16	1
10	PAOZZ	19207	12420907	LEAD, STORAGE BATTER	1
11	PAOZZ	19207	12420894	LEAD, STORAGE BATTER	1
12	PAOZZ	33609	6015	TOOLING, SET, CASE BA	5
13	PAOZZ	19207	12420895	LEAD, STORAGE BATTER	1
14	XDOZZ	19207	12420174	PLATE, REINFORCING	1
15	PAOZZ	19207	12414307-145	BOLT, MACHINE M16 X 1.5 X 70	3
16	PAOZZ	19207	12414308-025	NUT, SELF-LOCKING, EX M16 X 1.5	4
17	PAOZZ	15526	DIN 934 ST M6	NUT, SELF-LOCKING, HE M6 X 1	4
18	PAOZZ	19207	12414560-013	WASHER, LOCK M6	4
19	PAOZZ	56161	10503805	SCREW, CAP, HEXAGON H M6 X 1 X 20	4
20	PAOZZ	19207	12342303	CABLE ASSEMBLY, POWE	1
21	PAOZZ	96906	MS35206-244	SCREW, MACHINE #8-32 X 7/16	1
22	PAOZZ	19207	12269868	FIBER ROPE ASSEMBLY	1
23	PAOZZ	19207	12342306	CAP, PROTECTIVE, DUST	1
24	PAOZZ	19207	12414307-151	BOLT, MACHINE M16 X 1.5 X 130	1
25	PAOZZ	96906	MS52149-2	BATTERY, STORAGE	4
26	PAOZZ	19207	12420896	LEAD, STORAGE BATTER	1
27	PAOZZ	19207	10942521	COVER, BATTERY TERMI	8
28	PAOZZ	96906	MS51971-3	NUT, PLAIN, HEXAGON 3/8-16	3
29	PAOZZ	96906	MS15795-813	WASHER, FLAT 3/8	1
30	PAOZZ	19207	12420567	STUD, PLAIN DOWN	1
31	PAOZZ	96906	MS35338-141	WASHER, LOCK 3/8	2
32	PAOZZ	24995	11500137	RETAINER, BATTERY HOLD DOWN	1
33	PAOZZ	64678	000933 006058	SCREW, CAP, HEXAGON H M6 X 1 X 25	16
34	PAOZZ	19207	12417975-006	SPACER, RING	32
35	PAOZZ	24995	11089	RACK, BATTERY	1
36	PAOZZ	96906	MS51967-14	NUT, PLAIN, HEXAGON 1/2-13	2
37	XAOZZ	19207	12420173	PLATE, REINFORCING	1
38	PAOZZ	96906	MS24671-76	SCREW, CAP, SOCKET HE 1/2-13 X1 17/32	2
39	PAOZZ	19207	12414473-014	WASHER, FLAT M10	12
40	PAOZZ	19207	12414474-015	NUT, PLAIN, HEXAGON M10 X 1.5	12
41	PAOZZ	19207	12420855	BRACKET, BATTERY BOX	1
42	PAOZZ	15526	DIN 934 ST M6	NUT, SELF-LOCKING, HE M6 X 1	16

(1) ITEM NO	(2) SMR CODE	(3) FSCM	(4) PART NUMBER	(5) DESCRIPTION AND USABLE ON CODE (UOC)	(6) QTY
43	PAOOO	0FW39	12420856	BATTERY BOX	1
44	PAOZZ	96906	MS51849-67	.SCREW, MACHINE 3/16 X 32 X 7/8	2
45	PFOZZ	19207	12420090	.BRACKET, ANGLE	2
46	PAOZZ	19207	12420358	.STRIP, LAMINATED CLO	1
47	PAOZZ	19207	12414473-010	.WASHER, FLAT M5.5	10
48	PAOZZ	19207	12412478-04	.NUT, SELF-LOCKING, HE 10-32	10
49	PAOZZ	96906	MS51849-65	.SCREW, MACHINE 10-32	6
50	PAOZZ	0FW39	12420089-001	.LATCH, BATTERY BOX	2
51	PAOZZ	05824	M10X1.5X30 DIN 933 ST	SCREW, CAP, HEXAGON H M10 X 1.5 X 30	6
52	PAOZZ	19207	12420082	BRACKET, BTRY BOX	1
53	PAOZZ	81495	071 410 36	BOLT, MACHINE M10 X 1.5 X 40	6
54	PAOZZ	92489	11557-3	CLIP, SPRING TENSION	1
55	PAOZZ	96906	MS51861-46C	SCREW, TAPPING #10 X 5/8	3
56	PAOZZ	0FW39	TV950079-001	TESTER, BATTERY ELEC	1
57	PAOZZ	96906	MS25281F4	CLAMP, LOOP	1
58	PAOZZ	71400	MGB1-4	FUSE, CARTRIDGE	1

END OF FIGURE

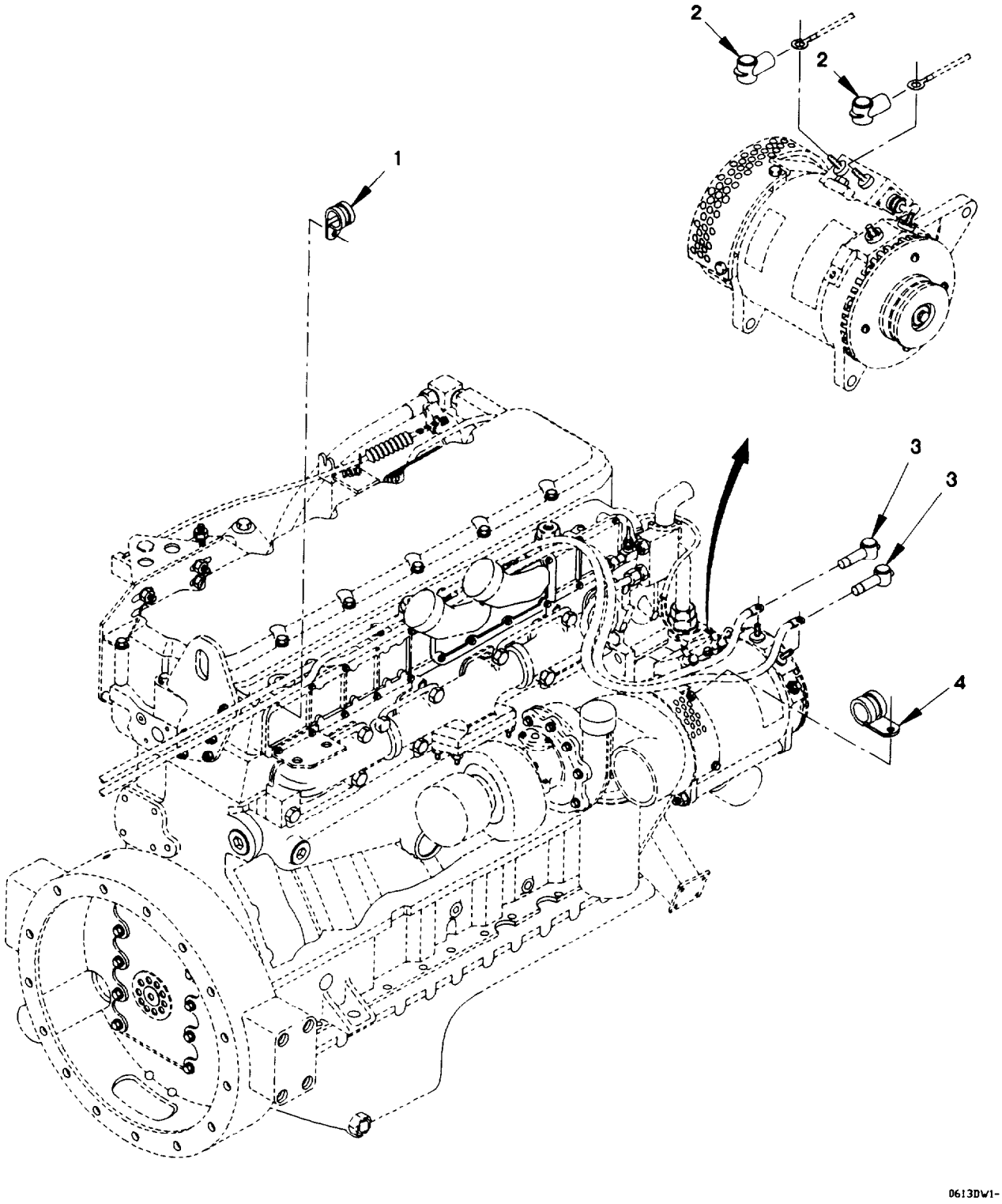

Figure 70. Engine Cable Routing Clamps and Insulators (Sheet 1 of 2)

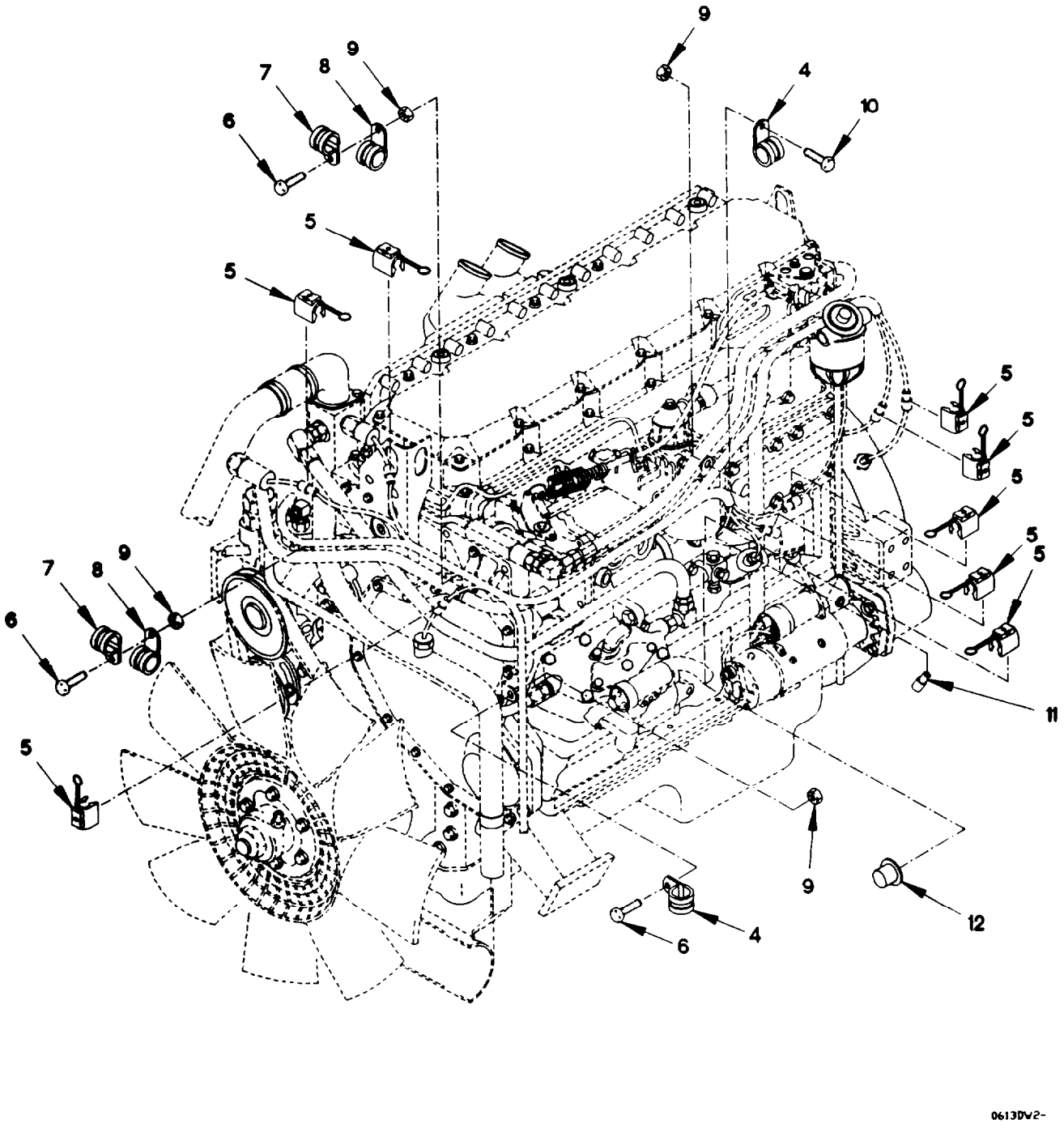

Figure 70. Engine Cable Routing Clamps and Insulators (Sheet 2 of 2)

(1) ITEM NO	(2) SMR CODE	(3) FSCM	(4) PART NUMBER	(5) DESCRIPTION AND USABLE ON CODE (UOC)	(6) QTY
				GROUP 0613: HULL OR CHASSIS WIRING HARNESS	
				FIG. 70 ENGINE CABLE ROUTING CLAMPS AND INSULATORS	
1	PAOZZ	96906	MS21333-125	CLAMP, LOOP 5/8 IN	3
2	PAOZZ	19207	12421186-002	CABLE, NIPPLE, ELECTR	2
3	PAOZZ	19207	12421186-001	DUMMY CONTACT, ELECT	2
4	PAOZZ	18076	S630H-16	CLAMP, LOOP	3
5	PAOZZ	45152	2AA855	CLIP, SPECIAL	8
6	PAOZZ	56161	10503805	SCREW, CAP, HEXAGON H M6 X 1 X 20	3
7	PAOZZ	18076	S630H-10	CLAMP, LOOP	2
8	PAOZZ	96906	MS21333-107	CLAMP, LOOP 1 IN	2
9	PAOZZ	15526	DIN 934 ST M6	NUT, SELF-LOCKING, HE M6 X 1	4
10	PAOZZ	64678	000933 006058	SCREW, CAP, HEXAGON H M6 X 1 X 25	1
11	PAOZZ	71468	120-1809-000	CONNECTOR BODY, PLUG	1
12	PAOZZ	19207	12420765	PLUG END SEAL ELECT	2
				END OF FIGURE	

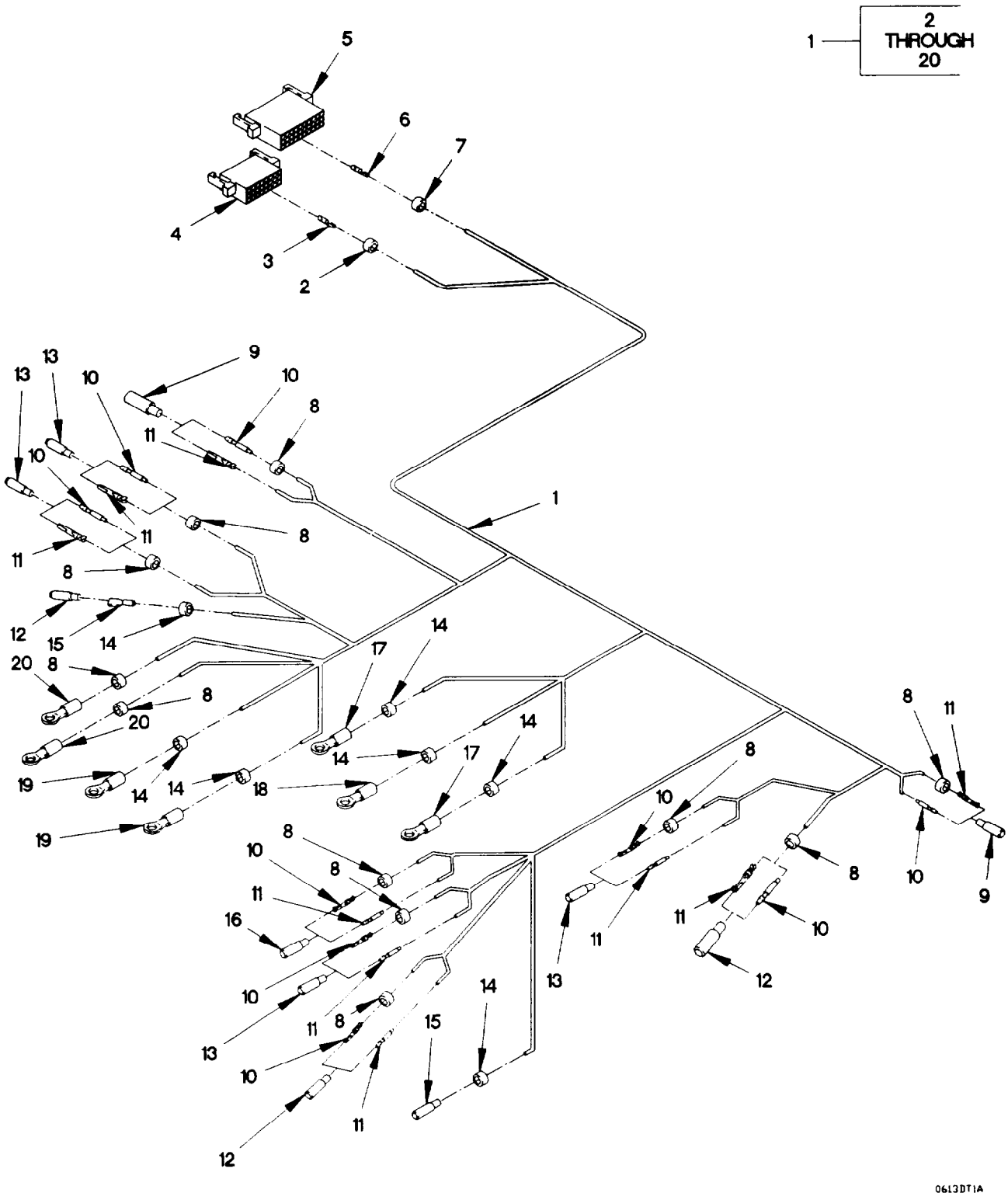

Figure 71. Engine Control Cable Assembly

(1) ITEM NO	(2) SMR CODE	(3) FSCM	(4) PART NUMBER	(5) DESCRIPTION AND USABLE ON CODE (UOC)	(6) QTY
				GROUP 0613: HULL OR CHASSIS WIRING HARNESS	
				FIG. 71 ENGINE CONTROL CABLE ASSEMBLY	
1	PAOOO	19207	12420875	CABLE ASSEMBLY, CONT	1
2	PAOZZ	81349	M43436/1-3	.BAND, MARKER	1
3	PAFZZ	09922	SM14M-1TK6	.CONTACT, ELECTRICAL	10
4	PAFZZ	09922	SMS12P-1	.CONNECTOR BODY, PLUG	1
5	PAFZZ	09922	SMS36R-1	.CONNECTOR BODY, RECE	1
6	PAFZZ	09922	SC14M-1TK6	.CONTACT, ELECTRICAL	22
7	PAOZZ	81349	M43436/1-4	.BAND, MARKER	1
8	PAOZZ	81349	M43436/1-2	.BAND, MARKER	11
9	PAFZZ	11083	7N9738	.CONNECTOR BODY, PLUG	3
10	PAFZZ	11083	7N7779	.CONTACT, ELECTRICAL	9
11	PAFZZ	71468	110238-0195	.PIN, GROOVED, HEADLES	10
12	PAFZZ	11083	7N7782	.CONNECTOR BODY, PLUG	3
13	PAFZZ	11083	7N9737	.CONNECTOR BODY, PLUG	4
14	PAOZZ	81349	M43436/1-1	.BAND, MARKER	7
15	PAFZZ	96906	MS27144-2	.CONNECTOR, PLUG, ELEC	2
16	PAFZZ	19207	12258940-4	.CONNECTOR, PLUG, ELEC	1
17	PAOZZ	96906	MS20659-105	.TERMINAL, LUG	2
18	PAOZZ	96906	MS20659-104	.TERMINAL, LUG	1
19	PAOZZ	96906	MS20659-163	.TERMINAL, LUG	2
20	PAOZZ	96906	MS25036-154	.TERMINAL, LUG	2

END OF FIGURE

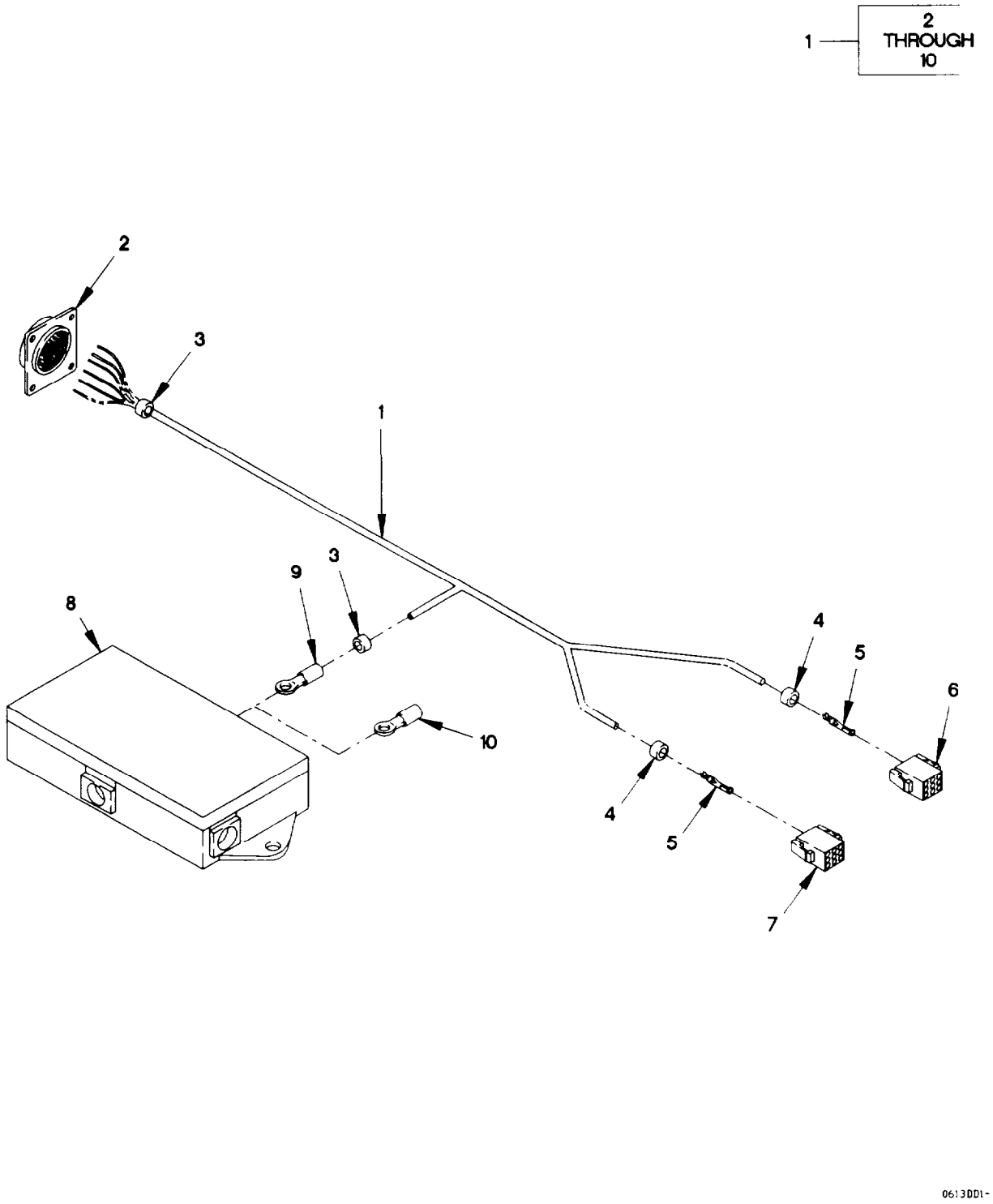

Figure 72. STE/ICE Cable Assembly

(1) ITEM NO	(2) SMR CODE	(3) FSCM	(4) PART NUMBER	(5) DESCRIPTION AND USABLE ON CODE (UOC)	(6) QTY
				GROUP 0613: HULL OR CHASSIS WIRING HARNESS	
				FIG. 72 STE/ICE CABLE ASSEMBLY	
1	PAOFF	19207	12420876	WIRING HARNESS, BRAN	1
2	PAFZZ	11083	5R7840	.CONNECTOR, RECEPTACL	1
3	PAFZZ	81349	M43436/1-4	.BAND, MARKER	2
4	PAFZZ	81349	M43436/1-3	.BAND, MARKER	2
5	PAFZZ	09922	SC16M-1TK6	.CONTACT, ELECTRICAL	16
6	PAFZZ	09922	SMS12R-1	.CONNECTOR, PLUG, ELEC	1
7	PAFZZ	09922	SMS9R-1	.INSERT, ELECTRICAL C	1
8	PAFZZ	06721	30063AE	.TERMINAL, BOX	1
9	PAOZZ	96906	MS25036-147	.TERMINAL, LUG	3
10	PAOZZ	96906	MS25036-108	.TERMINAL, LUG	18
				END OF FIGURE	

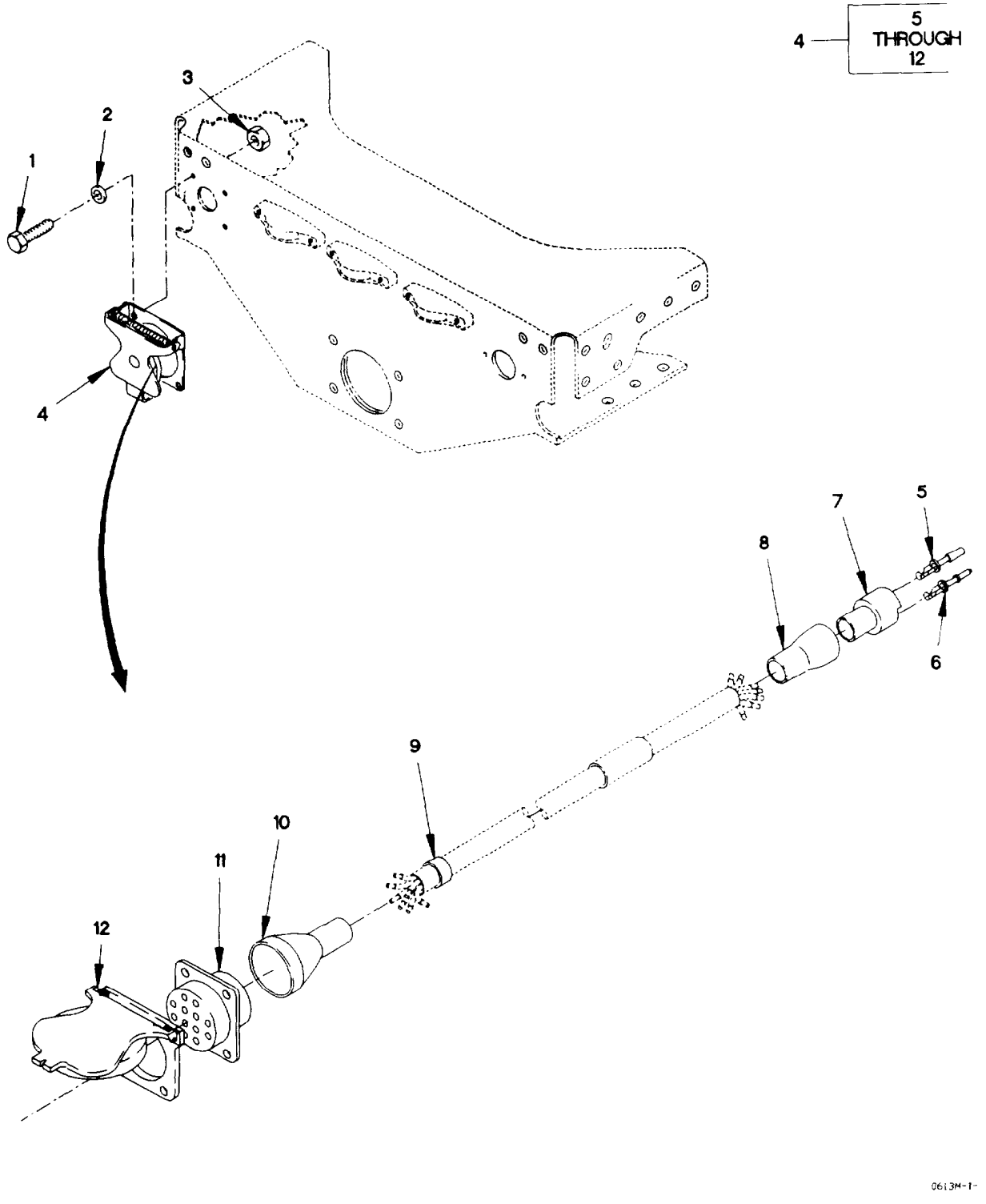

Figure 73. 12 Pin Intervehicle Cable

(1) ITEM NO	(2) SMR CODE	(3) FSCM	(4) PART NUMBER	(5) DESCRIPTION AND USABLE ON CODE (UOC)	(6) QTY
				GROUP 0613: HULL OR CHASSIS OR WIRING HARNESS	
				FIG. 73 12 PIN INTERVEHICLE CABLE	
1	PAOZZ	64678	000933 006058	SCREW, CAP, HEXAGON H M6 X 1 X 25	4
2	PAOZZ	19207	12417963-004	WASHER, FLAT M6	4
3	PAOZZ	15526	DIN 934 ST M6	NUT, SELF-LOCKING, HE M6 X 1	4
4	PAOOO	0FW39	12378502	CABLE ASSEMBLY, SPEC	1
5	PAOZZ	11083	7N7779	.CONTACT, ELECTRICAL	5
6	PAOZZ	71468	110238-0195	.PIN, GROOVED, HEADLES	5
7	PAOZZ	71468	120-1870-000	.CONNECTOR, PLUG, ELEC	1
8	PAOZZ	75037	313H253-6-250	.INSULATION SLEEVING	1
9	PAOZZ	81349	M43436/1-2	.BAND, MARKER	2
10	PAOZZ	75037	313H285-6-250	.INSULATION SLEEVING	1
11	PAOZZ	96906	MS75021-2	.CONNECTOR, RECEPTACL	1
12	PAOZZ	19207	7731428	.COVER, ELECTRICAL CO	1
				END OF FIGURE	

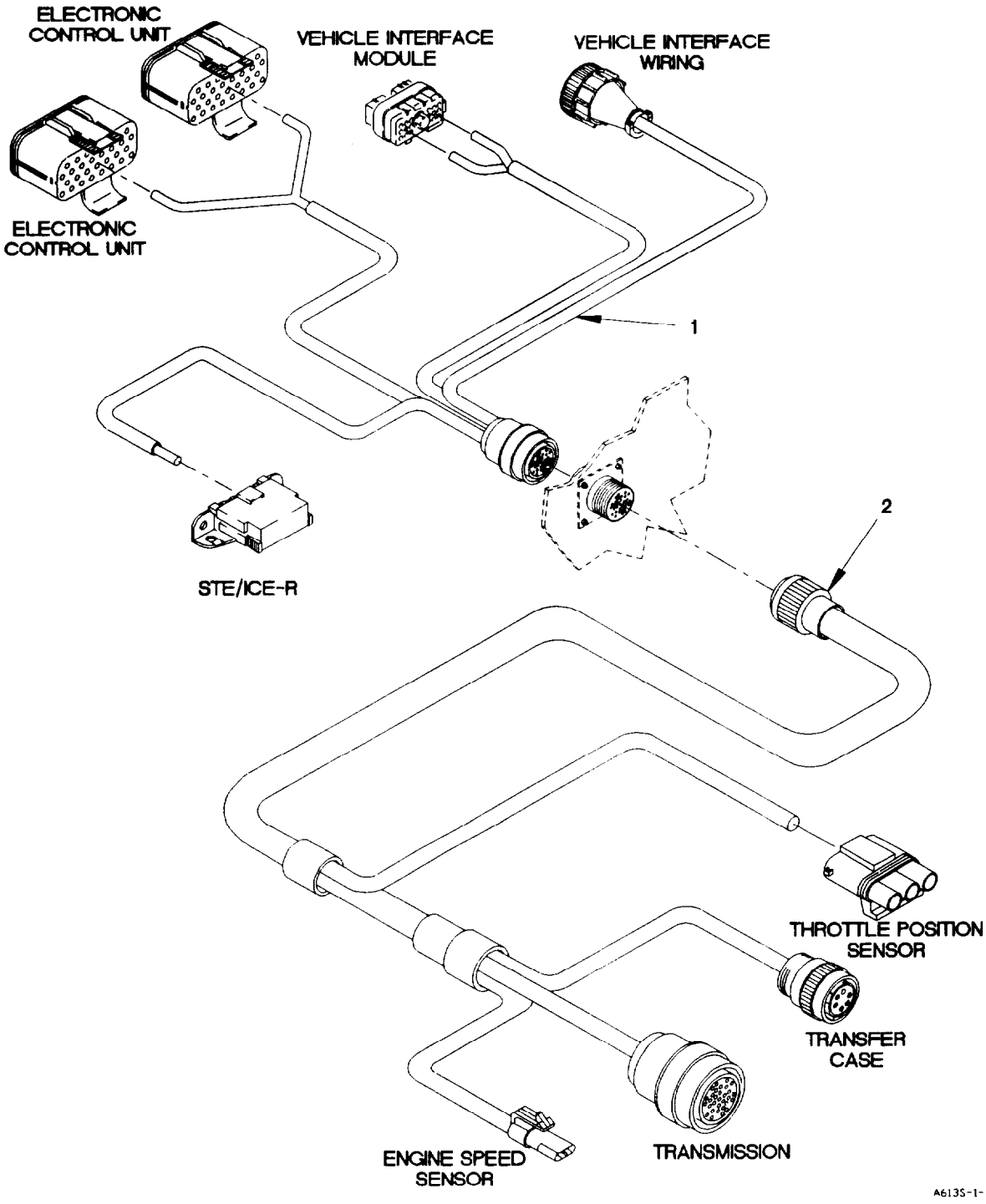

Figure 74. Transmission Wiring Harness (Sheet 1 of 2)

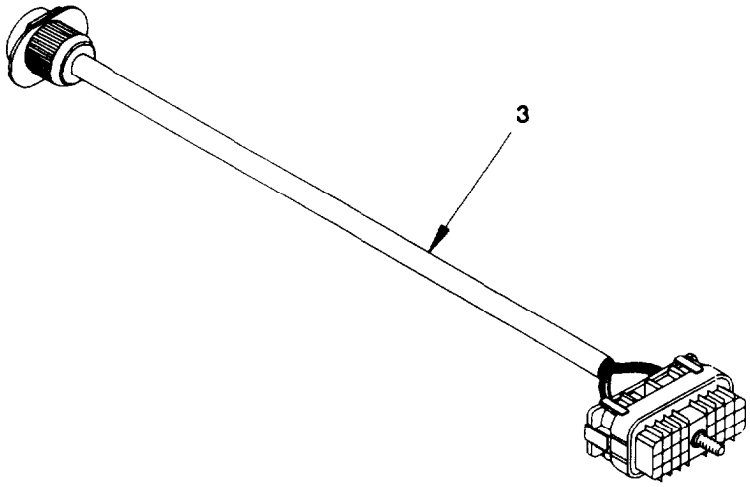

Figure 74. Transmission Wiring Harness (Sheet 2 of 2)

(1) ITEM NO	(2) SMR CODE	(3) FSCM	(4) PART NUMBER	(5) DESCRIPTION AND USABLE ON CODE (UOC)	(6) QTY
				GROUP 0613: HULL OR CHASSIS WIRING HARNESS	
				FIG. 74 TRANSMISSION WIRING HARNESS	
1	PAOZZ	73342	29509959	CABLE ASSEMBLY, SPEC	1
2	PAFZZ	19207	12420826	WIRING HARNESS, BRAN	1
3	PAFZZ	73342	29519210	WIRING HARNESS, BRAN USE PRIOR TO TRANSMISSION S/N 6510032369	1
				END OF FIGURE	

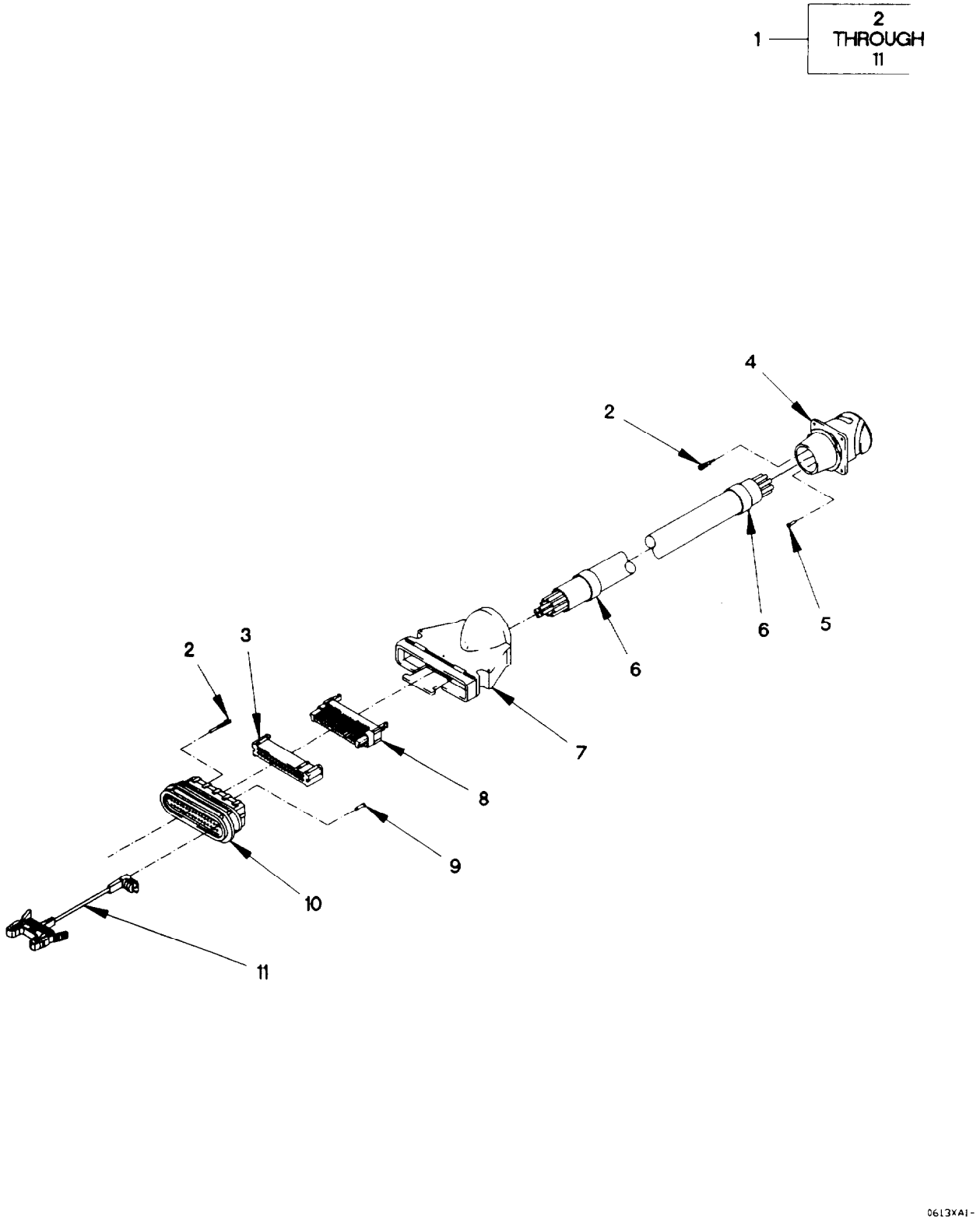

Figure 75. WTEC III Transmission Wiring Harness

(1) ITEM NO	(2) SMR CODE	(3) FSCM	(4) PART NUMBER	(5) DESCRIPTION AND USABLE ON CODE (UOC)	(6) QTY
				GROUP 0613: HULL OR CHASSIS WIRING HARNESS	
				FIG. 75 WTEC III TRANSMISSION WIRING HARNESS	
1	PAOOO	0FW39	12421783-001	HARNESS, ELECTRICAL USE ON TRANSMISSION S/N: 6510090786 AND HIGHER	1
1	PAOOO	0FW39	12421783-002	HARNESS, ELECTRICAL USE ON TRANSMISSION S/N: 6510090785 AND LOWER	1
2	PAOZZ	71468	031-0560-161	.SOCKET, CRIMP	28
3	PAOZZ	0FW39	12421832-003	.RETAINER, ELECTRICAL	1
4	PAOZZ	0FW39	12421825	.CONNECTOR, RECEPTACL	1
5	PAOZZ	96906	MS27488-16	.PLUG, END SEAL, ELECT	6
6	PAOZZ	81349	M43436/1-4	.BAND, MARKER	2
7	PAOZZ	19207	12421833	.CONNECTOR, PLUG	1
8	PAOZZ	19207	12421837	.STRAIN RELIEF, ELECT	1
9	PAOZZ	0FW39	12421836	.CAVITY PLUG, ELECTRI	4
10	PAOZZ	0FW39	12421834	.SEAL, CONNECTOR, ELEC	1
11	PAOZZ	0FW39	12421838	.CONNECTOR, ELECTRICA	1

END OF FIGURE

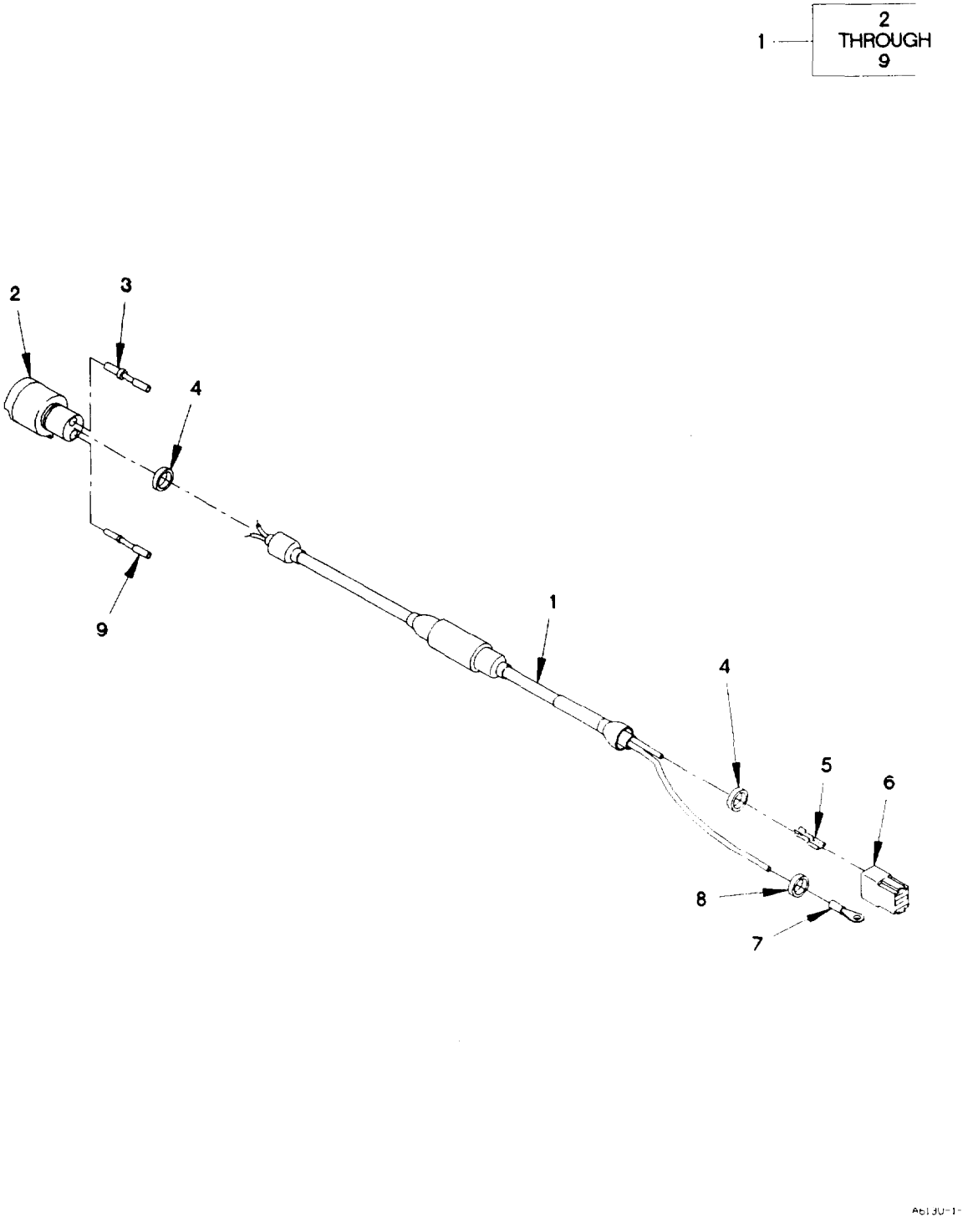

Figure 76. Windshield Washer Pump/EMI Cable

(1) ITEM NO	(2) SMR CODE	(3) FSCM	(4) PART NUMBER	(5) DESCRIPTION AND USABLE ON CODE (UOC)	(6) QTY
				GROUP 0613: HULL OR CHASSIS WIRING HARNESS	
				FIG. 76 WINDSHIELD WASHER PUMP/EMI CABLE	
1	PAOOO	0FW39	12420891-001	CABLE ASSEMBLY, SPEC WINDSHIELD WASHER PUMP	1
2	PAFZZ	11083	7N9738	.CONNECTOR BODY, PLUG	1
3	PAFZZ	71468	110238-0195	.PIN, GROOVED, HEADLES	1
4	PAOZZ	81349	M43436/1-3	.BAND, MARKER	1
5	PAOZZ	00779	41274	.TERMINAL, QUICK DISC	2
6	PAFZZ	09769	926474-1	.CONNECTOR, RECEPTACL	1
7	PAOZZ	96906	MS20659-127	.TERMINAL, LUG	1
8	PAOZZ	81349	M43436/1-1	.BAND, MARKER	1
9	PAFZZ	11083	7N7779	.CONTACT, ELECTRICAL	1
				END OF FIGURE	

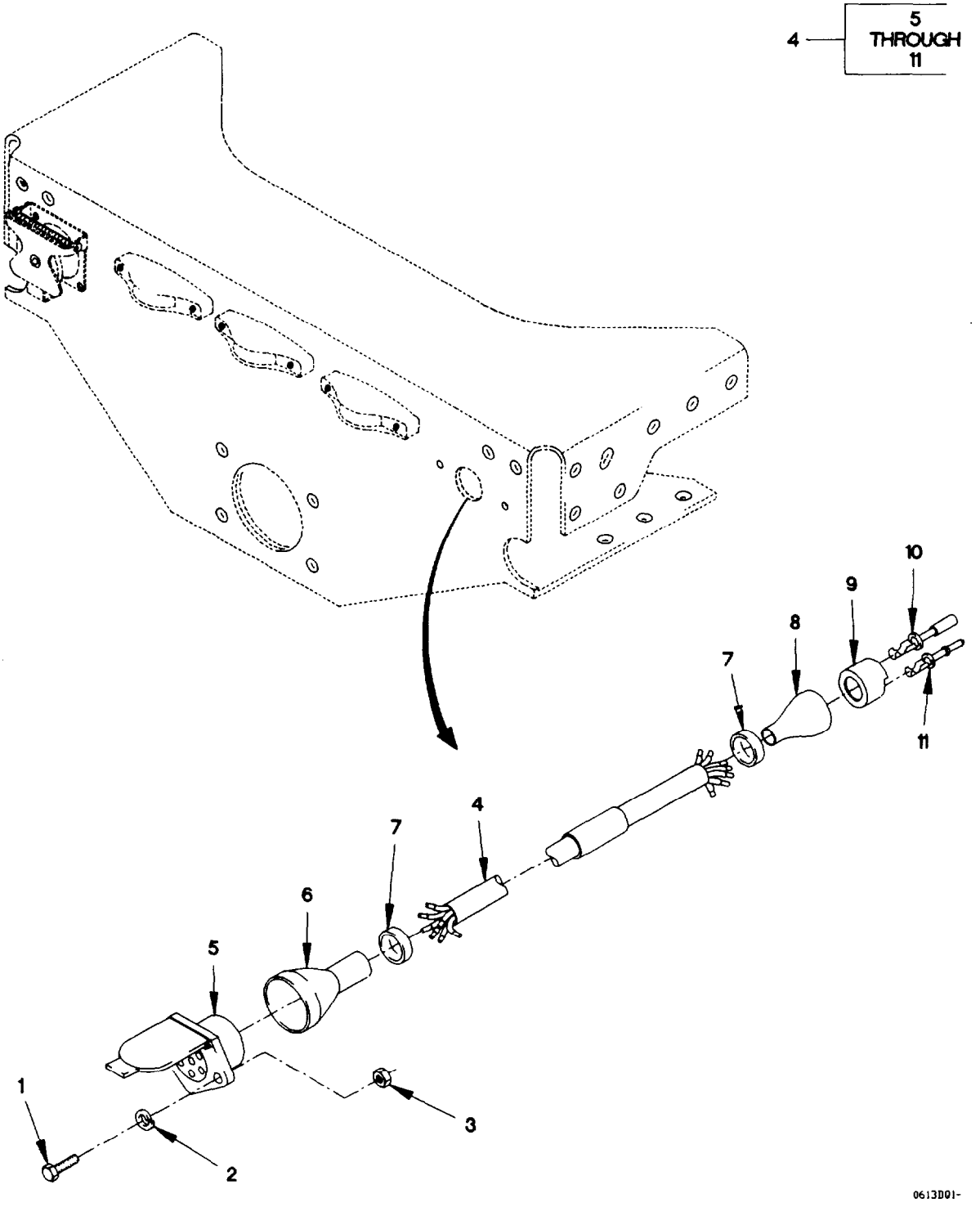

Figure 77. 7 Pin Intervehicle Cable (Sheet 1 of 2)

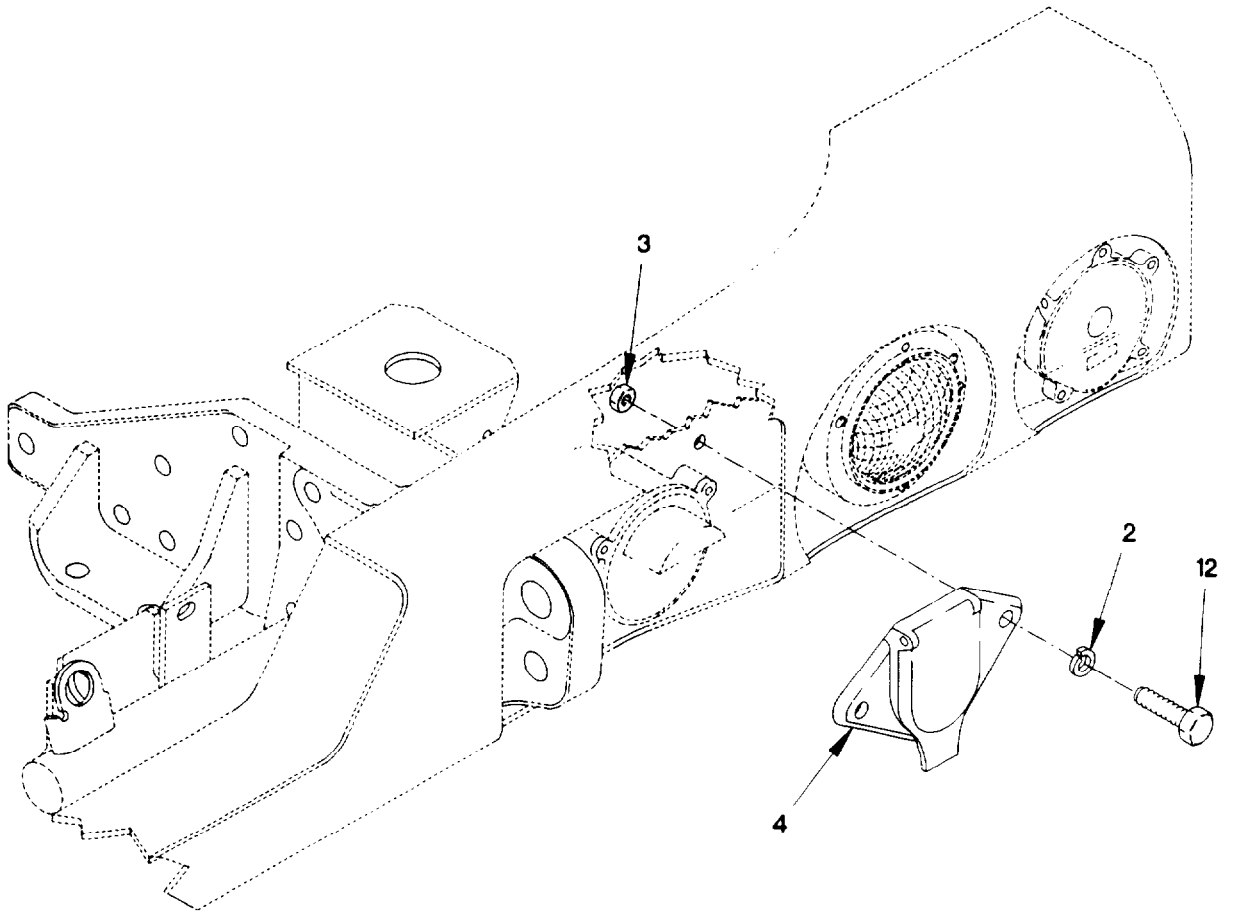

Figure 77. 7 Pin Intervehicle Cable (Sheet 2 of 2)

(1) ITEM NO	(2) SMR CODE	(3) FSCM	(4) PART NUMBER	(5) DESCRIPTION AND USABLE ON CODE (UOC)	(6) QTY
				GROUP 0613: HULL OR CHASSIS WIRING HARNESS	
				FIG. 77 7 PIN INTERVEHICLE CABLE	
1	PAOZZ	64678	000933 006058	SCREW, CAP, HEXAGON H M6 X 1 X 25	2
2	PAOZZ	19207	12414570-013	WASHER, LOCK M5.3	4
3	PAOZZ	15526	DIN 934 ST M6	NUT, SELF-LOCKING, HE M6 X 1	4
4	PAOZZ	0FW39	12420879	CABLE ASSEMBLY, SPEC	1
5	PAFZZ	13445	12080	.CONNECTOR, RECEPTACL	1
6	PAFZZ	75037	313H285-6-250	.INSULATION SLEEVING	1
7	PAOZZ	81349	M43436/1-3	.BAND, MARKER	2
8	PAFZZ	75037	313H253-6-250	.INSULATION SLEEVING	1
9	PAFZZ	71468	120-1874-000	.CONNECTOR, PLUG, ELEC	1
10	PAFZZ	11083	7N7779	.CONTACT, ELECTRICAL	4
11	PAFZZ	71468	110238-0195	.PIN, GROOVED, HEADLES	3
12	PAOZZ	56161	10503805	SCREW, CAP, HEXAGON H M6 X 1 X 20	2
				END OF FIGURE	

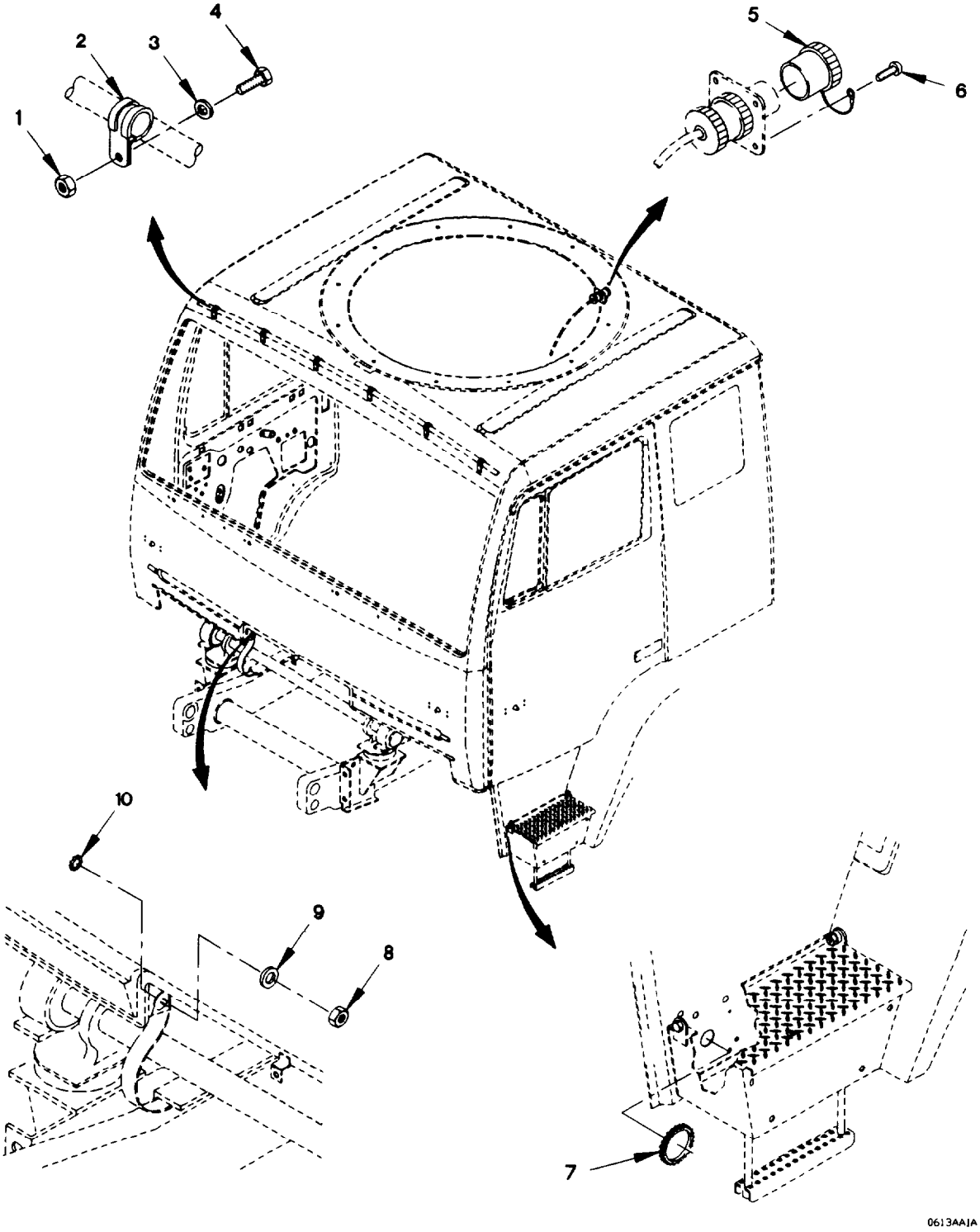

Figure 78. Cab Cable Routing Clamps and Brackets (Sheet 1 of 2)

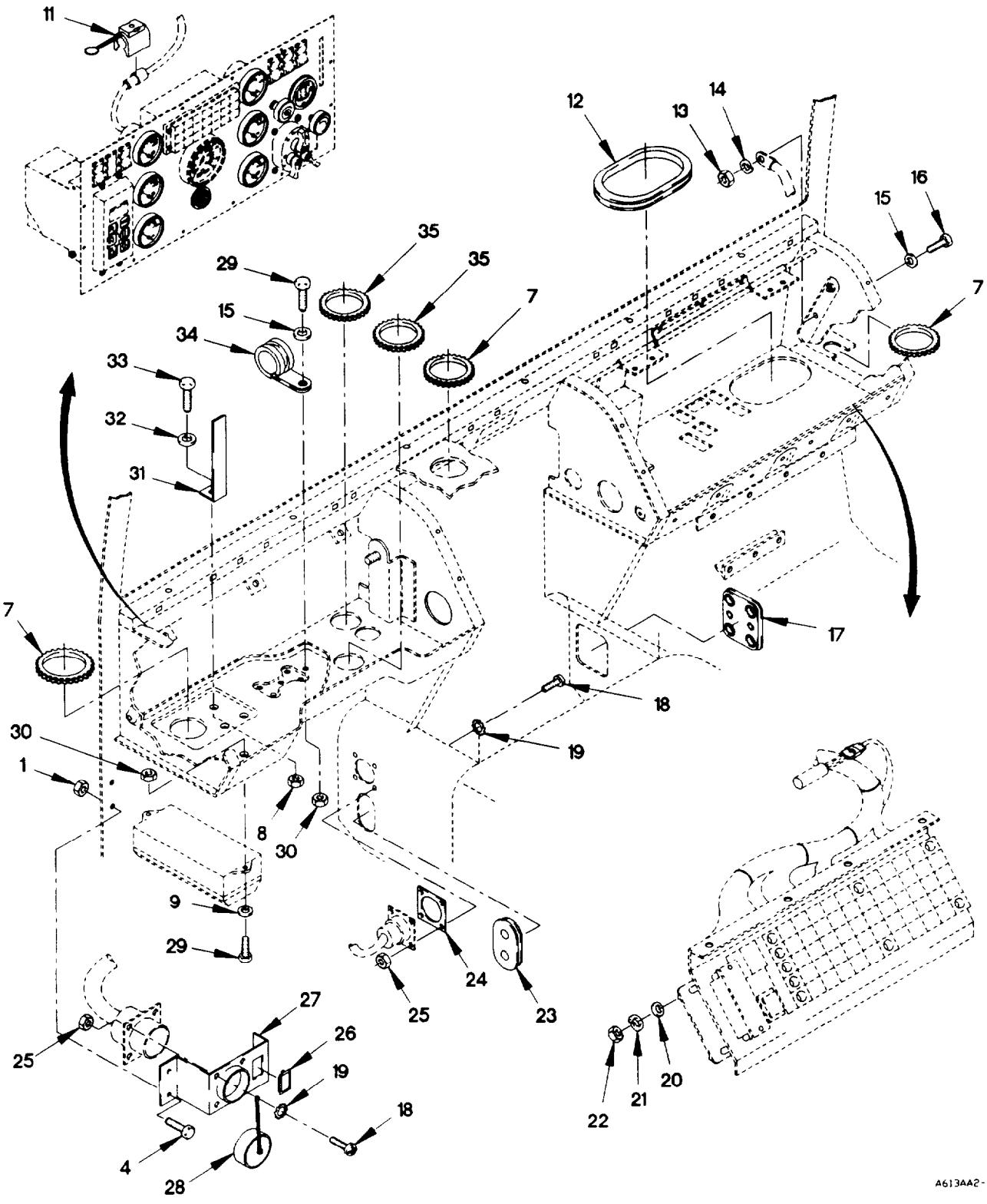

Figure 78. Cab Cable Routing Clamps and Brackets (Sheet 2 of 2)

(1) ITEM NO	(2) SMR CODE	(3) FSCM	(4) PART NUMBER	(5) DESCRIPTION AND USABLE ON CODE (UOC)	(6) QTY
				GROUP 0613: HULL OR CHASSIS WIRING HARNESS	
				FIG. 78 CAB CABLE ROUTING CLAMPS AND BRACKETS	
1	PAOZZ	84256	ALS3-470-2.0	NUT, PLAIN, KNURLED M4X. 70 (GRIP RANGE 0.5 - 2.0)	10
2	PAOZZ	18276	S630H-10	CLAMP, LOOP	8
3	PAOZZ	D8286	DIN9021-5, 3-100H V-C-B3B	WASHER, FLAT M5.3	8
4	PAOZZ	19207	12414419-042	SCREW, MACHINE M4 X .7 X 16	10
5	PAOZZ	71468	CA121003-901	CAP, PROTECTIVE, DUST	1
6	PAOZZ	56161	10505582	SCREW, MACHINE M4 X .7 X 6.6	4
7	PAOZZ	96906	MS21266-2N	GROMMET, NONMETALLIC	4
8	PAOZZ	19207	12414315-006	NUT, SELF-LOCKING, HE M8 X 1.25	2
9	PAOZZ	19207	12417975-008	WASHER, FLAT M8.4	3
10	PAOZZ	96906	MS35335-38	WASHER, LOCK 9/16	1
11	PAOZZ	45152	2AA855	CLIP, SPECIAL	8
12	PAOZZ	81348	ZZR765/03-001A7	NONMETALLIC CHANNEL	1
13	PAOZZ	19207	12414474-010	NUT, PLAIN, HEXAGON M6 X 1.0	1
14	PAOZZ	96906	MS35335-61	WASHER, LOCK 1/4	1
15	PAOZZ	19207	12417975-006	SPACER, RING	3
16	PAOZZ	15526	DIN933-M6X16-8.8 -A4C	SCREW, CAP, HEXAGON H M6 X 1 X 16	1
17	PAOZZ	19207	12420959-002	GROMMET, NONMETALLIC	1
18	PAOZZ	96906	MS35206-230	SCREW, MACHINE #6-32 X 1/2	8
19	PAOZZ	96906	MS35335-30	WASHER, LOCK NO. 6	8
20	PAOZZ	96906	MS15795-847	WASHER, FLAT NO. 8	4
21	PAOZZ	96906	MS35338-137	WASHER, LOCK NO. 6	2
22	PAOZZ	96906	MS35649-284	NUT, PLAIN, HEXAGON 5/32-32	2
23	PAOZZ	19207	12420959-001	GROMMET, NONMETALLIC	1
24	PAOZZ	81349	M28840/24HA	PLATE, RETAINING, ELE	1
25	PAOZZ	96906	MS35649-262	NUT, PLAIN, HEXAGON 1/8 X 32	8
26	PAOZZ	45152	1588570	COVER, ELECTRICAL SW	1
27	PAOZZ	19207	12417875	BRACKET, DOUBLE ANGL	1
28	PAOZZ	19207	12258943	COVER, ELECTRICAL CO	1
29	PAOZZ	56161	10503805	SCREW, CAP, HEXAGON H M6 X 1 X 20	3
30	PAOZZ	84256	ALS3-610-4.2	NUT, PLAIN, CLINCH M6X1.0 (GRIP RANGE 0.7 - 4.20)	3
31	PAOZZ	19207	12420960	BRACKET, ANGLE	1
32	PAOZZ	34914	990 3861	WASHER, FLAT M8.4	2
33	PAOZZ	05523	42051-14	SCREW, CAP, HEXAGON H M8 X 1.25 X 14	1
34	PAOZZ	18076	S630H-40	CLAMP, LOOP	1
35	PAOZZ	96906	MS21266-3N	GROMMET, NONMETALLIC	2

END OF FIGURE

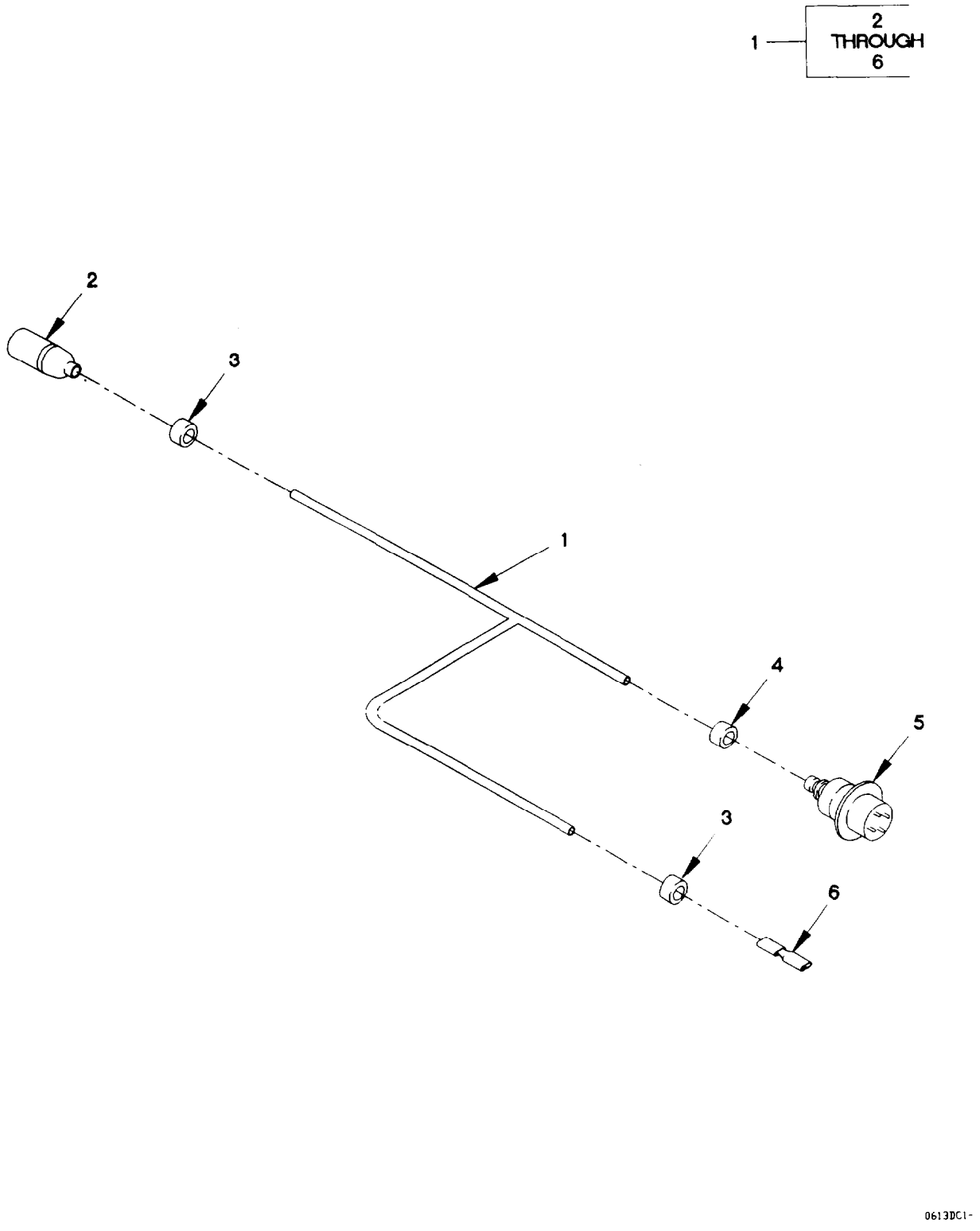

Figure 79. Warning Light Cable Assembly

(1) ITEM NO	(2) SMR CODE	(3) FSCM	(4) PART NUMBER	(5) DESCRIPTION AND USABLE ON CODE (UOC)	(6) QTY
				GROUP 0613: HULL OR CHASSIS WIRING HARNESS	
				FIG. 79 WARNING LIGHT CABLE ASSEMBLY	
1	PAOFF	19207	12420874	WIRING HARNESS	1
2	PAFZZ	96906	MS27144-2	.CONNECTOR, PLUG, ELEC	1
3	PAFZZ	81349	M43436/1-1	.BAND, MARKER	2
4	PAFZZ	81349	M43436/1-2	.BAND, MARKER	1
5	PAFZZ	71468	CA3100E10SL-4S-B -02	.CONNECTOR, RECEPTACL	1
6	PAOZZ	74025	10476-103	.TERMINAL, QUICK DISC	1
				END OF FIGURE	

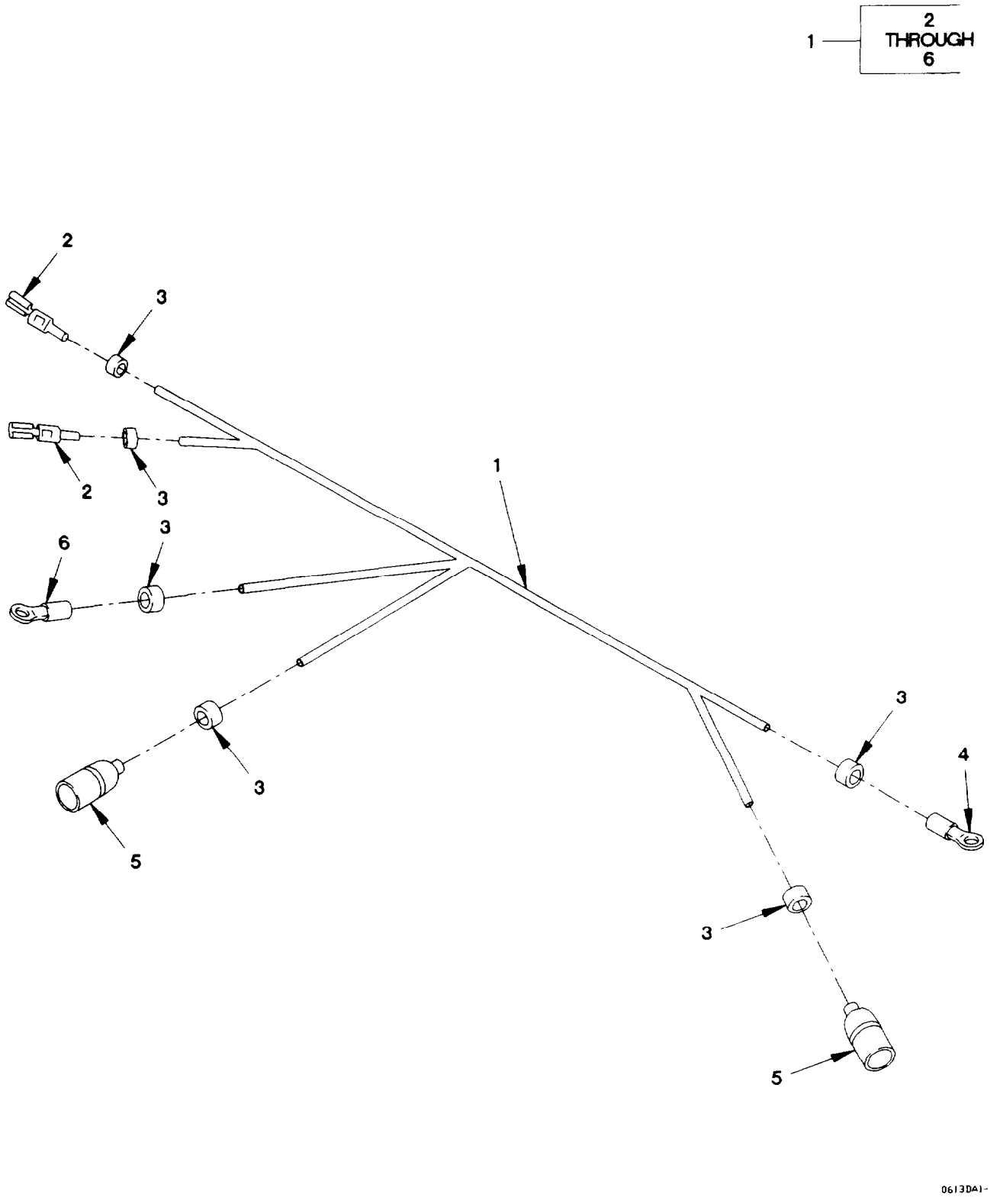

Figure 80. Door and Cab Marker Light Cable Assembly

(1) ITEM NO	(2) SMR CODE	(3) FSCM	(4) PART NUMBER	(5) DESCRIPTION AND USABLE ON CODE (UOC)	(6) QTY
				GROUP 0613: HULL OR CHASSIS WIRING HARNESS	
				FIG. 80 DOOR AND CAB MARKER LIGHT CABLE ASSEMBLY	
1	PAOFF	19207	12420871	WIRING HARNESS BRAN RIGHT SIDE CABLE	1
1	PAOFF	19207	12420873	WIRING HARNESS LEFT SIDE CABLE	1
2	PAOZZ	74025	10476-103	.TERMNAL, QUICK DISC	2
3	PAOZZ	81349	M43436/1-1	.BAND, MARKER	6
4	PAOZZ	96906	MS20659-104	.TERMINAL, LUG	1
5	PAOZZ	96906	MS27144-2	.CONNECTOR, PLUG, ELEC	2
6	PAOZZ	96906	MS20659-105	.TERMINAL, LUG	1
				END OF FIGURE	

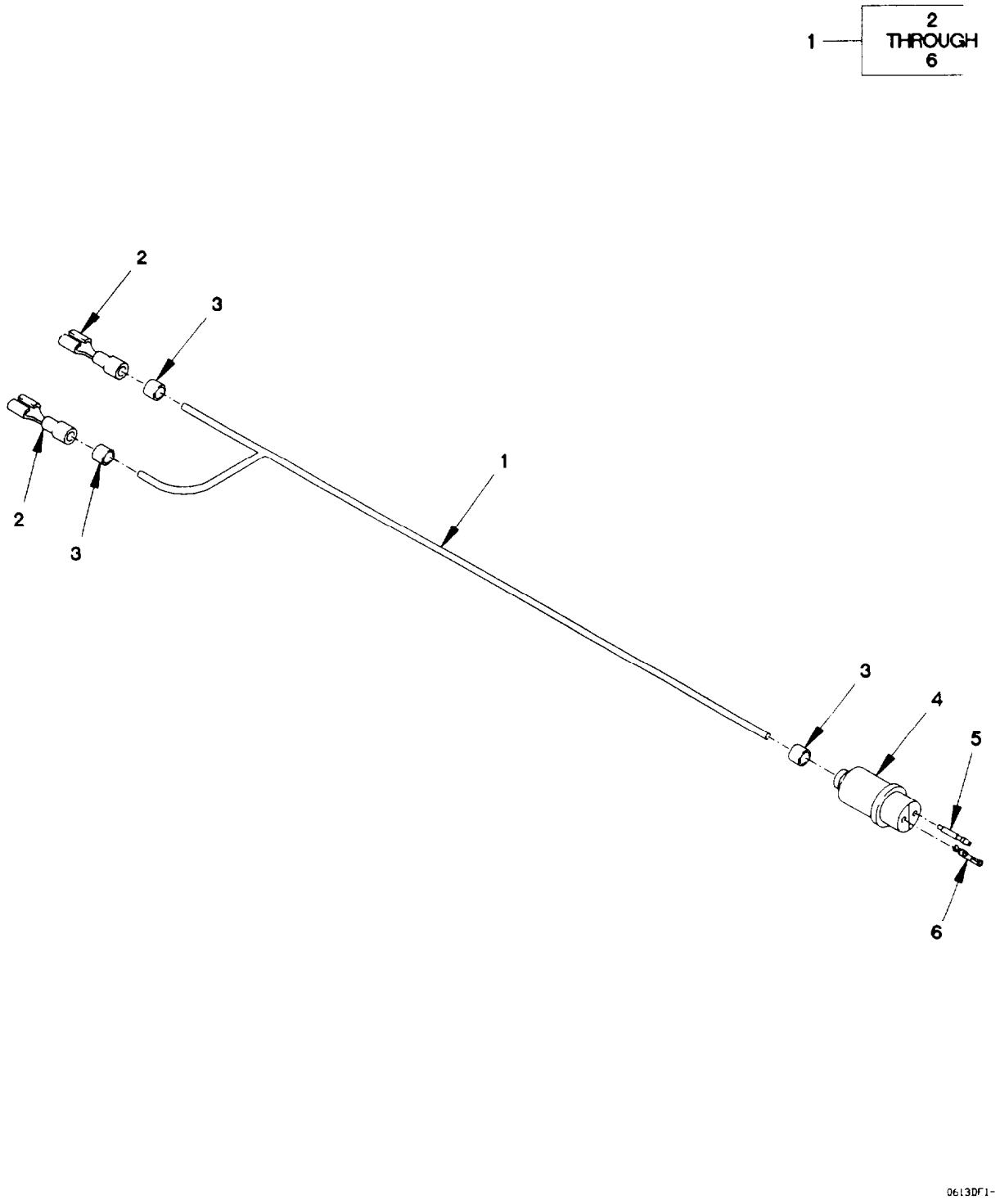

Figure 81. Air Drop Cab Clearance and Marker Lights Lower Cable Assembly

(1) ITEM NO	(2) SMR CODE	(3) FSCM	(4) PART NUMBER	(5) DESCRIPTION AND USABLE ON CODE (UOC)	(6) QTY
				GROUP 0613: HULL OR CHASSIS WIRING HARNESS	
				FIG. 81 AIR DROP CAB CLEARANCE AND MARKER LIGHTS LOWER CABLE ASSEMBLY	
1	PAOFF	0FW39	12420892	CABLE ASSEMBLY, SPEC UOC: LAC, LWC,	1
2	PAOZZ	74025	10476-103	.TERMINAL, QUICK DISC UOC: LAC, LWC,	2
3	PAOZZ	81349	M43436/1-1	.BAND, MARKER UOC: LAC, LWC,	3
4	PAFZZ	11083	7N9738	.CONNECTOR BODY, PLUG UOC: LAC, LWC,	1
5	PAFZZ	11083	7N7779	.CONTACT, ELECTRICAL UOC: LAC, LWC,	1
6	PAFZZ	71458	110238-0195	.PIN, GROOVED, HEADLES UOC: LAC, LWC,	1
				END OF FIGURE	

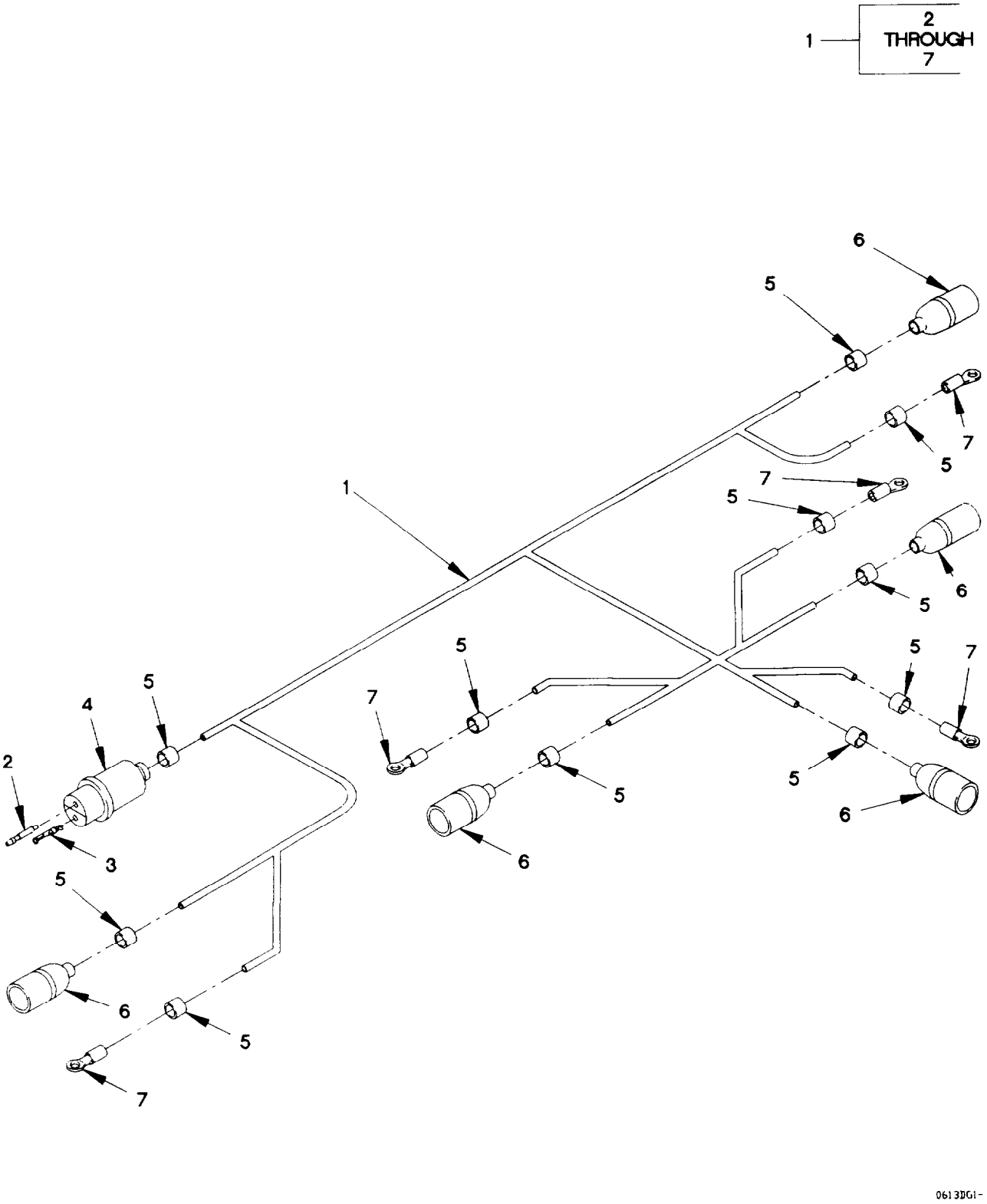

Figure 82. Air Drop Cab Clearance and Marker Lights Upper Cable Assembly

(1) ITEM NO	(2) SMR CODE	(3) FSCM	(4) PART NUMBER	(5) DESCRIPTION AND USABLE ON CODE (UOC)	(6) QTY
				GROUP 0613: HULL OR CHASSIS WIRING HARNESS	
				FIG. 82 AIR DROP CAB CLEARANCE AND MARKER LIGHTS UPPER CABLE ASSEMBLY	
1	PAOFF	19207	12420893	CABLE ASSEMBLY, SPEC UOC: LAC, LWC,	1
2	PAFZZ	71468	110238-0195	.PIN, GROOVED, HEADLES UOC: LAC, LWC,	1
3	PAFZZ	11083	7N7779	.CONTACT, ELECTRICAL UOC: LAC, LWC,	1
4	PAFZZ	11083	7N9737	.CONNECTOR BODY, PLUG UOC: LAC, LWC,	1
5	PAOZZ	81349	M43436/1-1	.BAND, MARKER UOC: LAC, LWC,	11
6	PAFZZ	96906	MS27144-2	.CONNECTOR, PLUG, ELEC UOC: LAC, LWC,	5
7	PAOZZ	96906	MS20659-104	.TERMINAL, LUG UOC: LAC, LWC,	5
				END OF FIGURE	

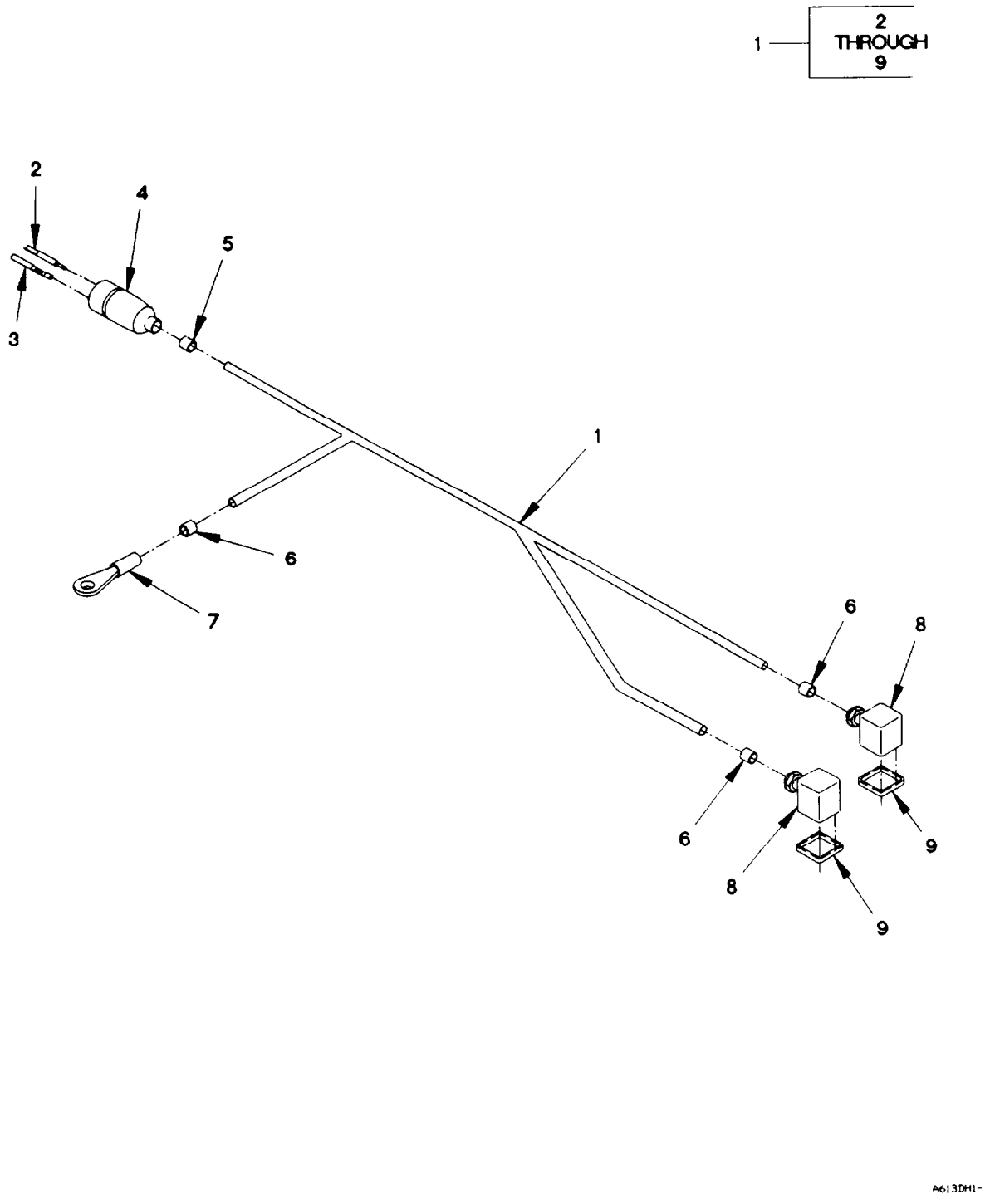

Figure 83. Winch Control Cable Assembly

(1) ITEM NO	(2) SMR CODE	(3) FSCM	(4) PART NUMBER	(5) DESCRIPTION AND USABLE ON CODE (UOC)	(6) QTY
				GROUP 0613: HULL OR CHASSIS WIRING HARNESS	
				FIG. 83 WINCH CONTROL CABLE ASSEMBLY	
1	PAOFF	0FW39	12420881	WIRING HARNESS, BRAN	1
2	PAFZZ	71468	110238-0195	.PIN, GROOVED, HEADLES	1
3	PAFZZ	11083	7N7779	.CONTACT, ELECTRICAL	1
4	PAFZZ	11083	7N9737	.CONNECTOR BODY, PLUG	1
5	PAOZZ	81349	M43436/1-2	.BAND, MARKER	1
6	PAOZZ	81349	M43436/1-1	.BAND, MARKER	3
7	PAOZZ	96906	MS20659-106	.TERMINAL, LUG	1
8	PAFZZ	15526	DIN43650AF2	.CONNECTOR, SOLENOID	2
9	PAOZZ	0FW39	12421155	.GASKET	2
				END OF FIGURE	

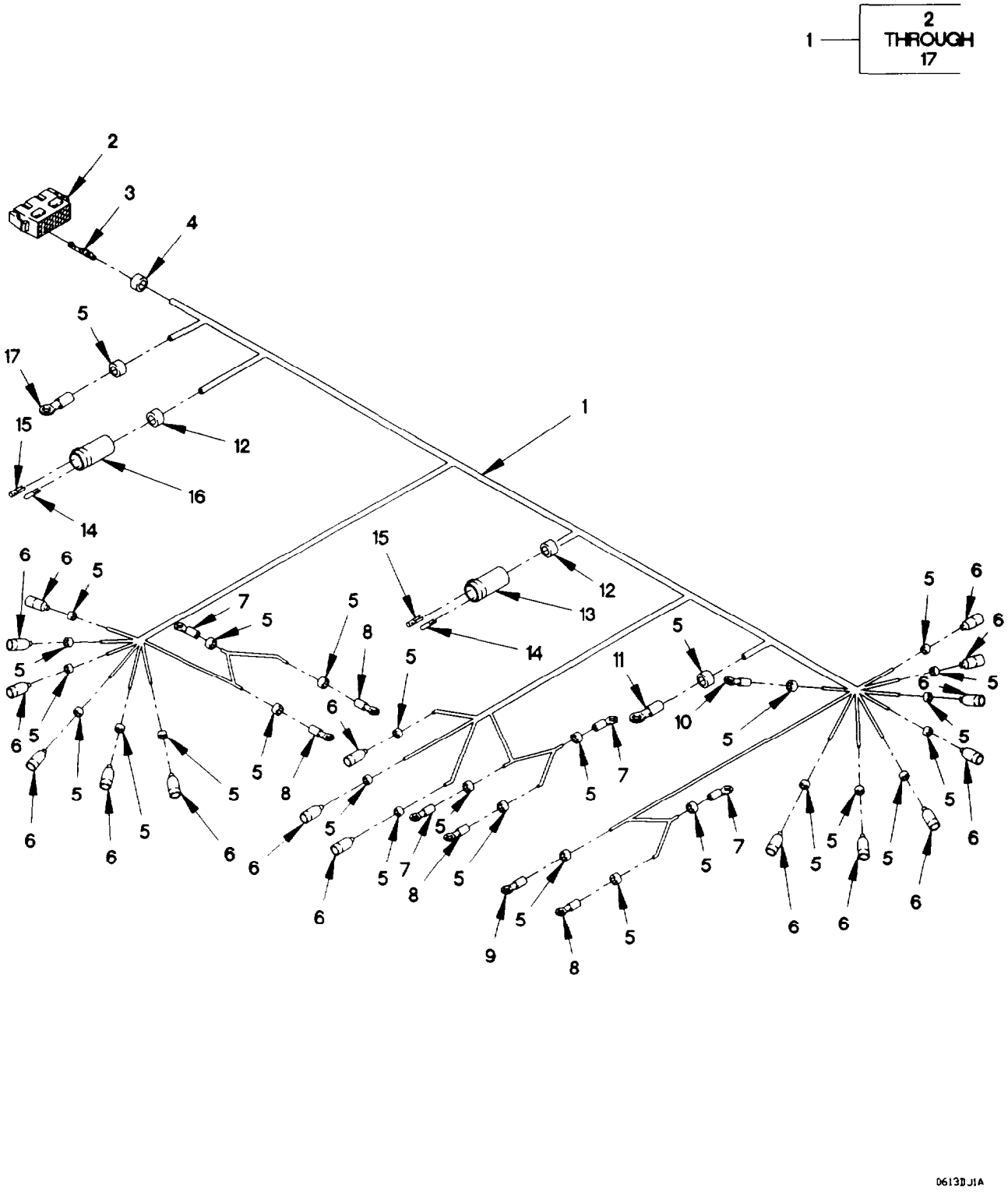

Figure 84. Rear Lights Cable Assembly

(1) ITEM NO	(2) SMR CODE	(3) FSCM	(4) PART NUMBER	(5) DESCRIPTION AND USABLE ON CODE (UOC)	(6) QTY
				GROUP 0613: HULL OR CHASSIS WIRING HARNESS	
				FIG. 84 REAR LIGHTS CABLE ASSEMBLY	
1	PAOFF	19207	12420869-001	WIRING HARNESS, BRAN	1
2	PAFZZ	09922	SMS18R-1	.CONNECTOR BODY, RECE	1
3	PAFZZ	09922	SC14M-1TK6	.CONTACT, ELECTRICAL	16
4	PAOZZ	81349	M43436/1-4	.BAND, MARKER	1
5	PAOZZ	81349	M43436/1-1	.BAND, MARKER	28
6	PAFZZ	96906	MS27144-2	.CONNECTOR , PLUG, ELEC	16
7	PAOZZ	96906	MS20659-105	.TERMINAL, LUG	4
8	PAOZZ	96906	MS20659-104	.TERMINAL, LUG	4
9	PAOZZ	96906	MS20659-128	.TERMINAL, LUG	1
10	PAOZZ	96906	MS20659-127	.TERMINAL, LUG	1
11	PAOZZ	96906	MS20659-163	.TERMINAL, LUG	1
12	PAOZZ	81349	M43436/1-3	.BAND, MARKER	2
13	PAFZZ	11083	9G3667	.CONNECTOR BODY, PLUG	1
14	PAFZZ	71468	110238-0195	.PIN, GROOVED, HEADLES	9
15	PAFZZ	11083	7N7779	.CONTACT, ELECTRICAL	7
16	PAFZZ	71468	120-1873-000	.CONNECTOR, PLUG, ELEC	1
17	PAOZZ	96906	MS20659-106	.TERMINAL, LUG	1

END OF FIGURE

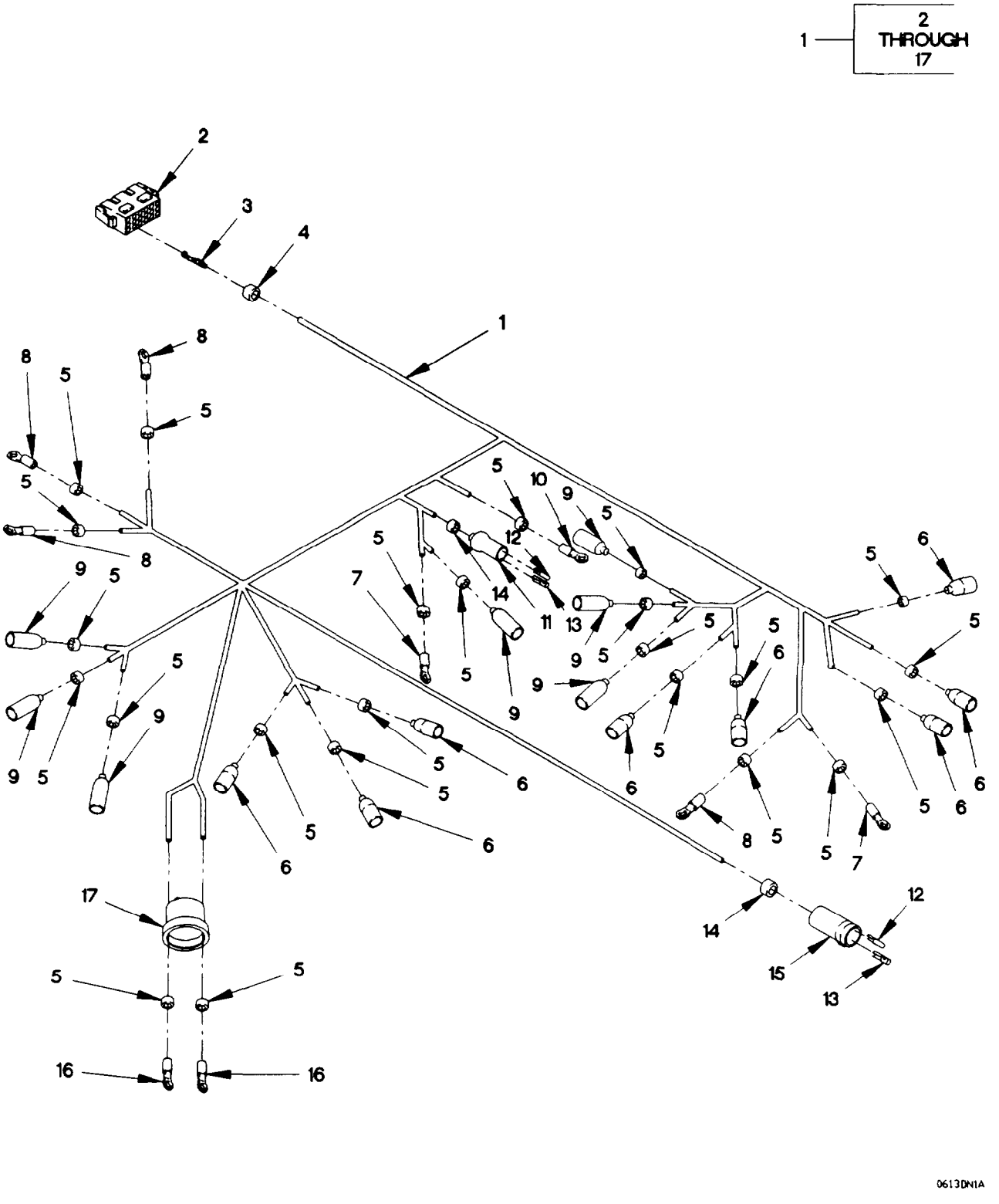

Figure 85. Front Lights Cable Assembly

(1) ITEM NO	(2) SMR CODE	(3) FSCM	(4) PART NUMBER	(5) DESCRIPTION AND USABLE ON CODE (UOC)	(6) QTY
				GROUP 0613: HULL OR CHASSIS WIRING HARNESS	
				FIG. 85 FRONT LIGHTS CABLE ASSEMBLY	
1	PAOFF	19207	12420868-001	WIRING HARNESS, BRAN	1
2	PAFZZ	09922	SMS18P-1	.CONNECTOR BODY, RECE	1
3	PAFZZ	09922	SM14M-1TK6	.CONTACT, ELECTRICAL	16
4	PAOZZ	81349	M43436/1-4	.BAND, MARKER	1
5	PAOZZ	81349	M43436/1-1	.BAND, MARKER	24
6	PAFZZ	96906	MS27144-2	.CONNECTOR, PLUG, ELEC	8
7	PAOZZ	96906	MS20659-127	.TERMINAL, LUG	2
8	PAOZZ	96906	MS20659-128	.TERMINAL, LUG	4
9	PAFZZ	96906	MS27142-3	.CONNECTOR, PLUG, ELEC	7
10	PAOZZ	96906	MS20659-106	.TERMINAL, LUG	1
11	PAFZZ	71468	120-1873-000	.CONNECTOR, PLUG, ELEC	1
12	PAFZZ	71468	110238-0195	.PIN, GROOVED, HEADLES	5
13	PAFZZ	11083	7N7779	.CONTACT, ELECTRICAL	4
14	PAOZZ	81349	M43436/1-3	.BAND, MARKER	2
15	PAFZZ	11083	7N9737	.CONNECTOR, BODY, PLUG	1
16	PAOZZ	96906	MS20659-104	.TERMINAL, LUG	2
17	PAOZZ	06721	1325530	.MOISTURE SEAL	1

END OF FIGURE

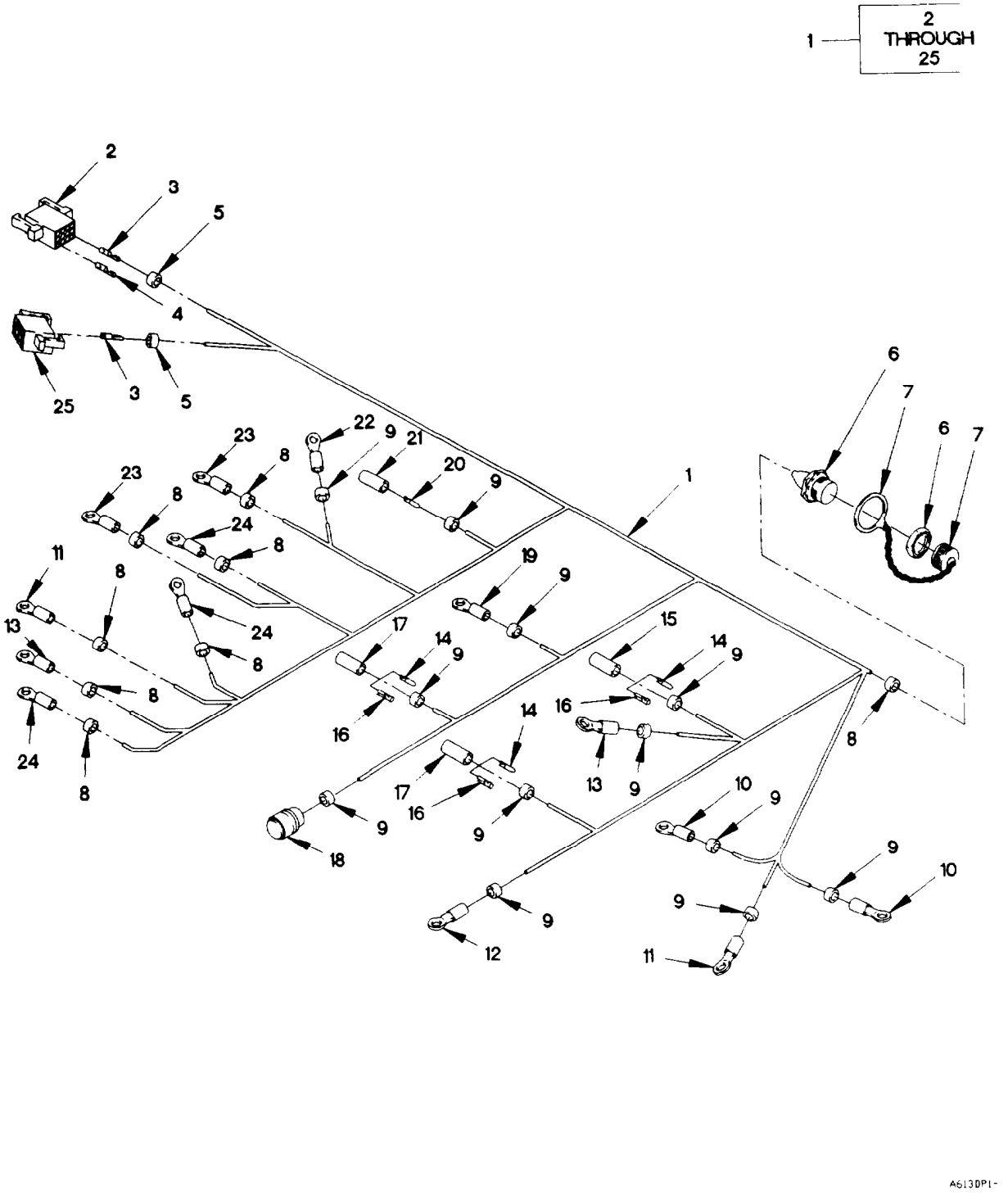

Figure 86. Start and Charge Cable Assembly

(1) ITEM NO	(2) SMR CODE	(3) FSCM	(4) PART NUMBER	(5) DESCRIPTION AND USABLE ON CODE (UOC)	(6) QTY
				GROUP 0613: HULL OR CHASSIS WIRING HARNESS	
				FIG. 86 START AND CHARGE CABLE ASSEMBLY	
1	PAOOO	0FW39	12420870	WIRING HARNESS, BRAN	1
2	PAOZZ	09922	SMS12P-1	.CONNECTOR BODY, PLUG	1
3	PAOZZ	09922	SM14M-1TK6	.CONTACT, ELECTRICAL	13
4	PAOZZ	09922	SM16M-1TK6	.CONTACT, ELECTRICAL	5
5	PAOZZ	81349	M43436/1-3	.BAND, MARKER	2
6	PAOZZ	96906	MS3474W14-5S	.CONNECTOR, RECEPTACL	1
7	PAOZZ	96906	MS3181-14N	.COVER, ELECTRICAL CO	1
8	PAOZZ	81349	M43436/1-1	.BAND, MARKER	8
9	PAOZZ	81349	M43436/1-2	.BAND, MARKER	12
10	PAOZZ	96906	MS20659-105	.TERMINAL, LUG	2
11	PAOZZ	96906	MS20659-128	.TERMINAL, LUG	2
12	PAOZZ	96906	MS20659-163	.TERMINAL, LUG	1
13	PAOZZ	96906	MS20659-127	.TERMINAL, LUG	2
14	PAOZZ	71468	110238-0195	.PIN, GROOVED, HEADLES	3
15	PAOZZ	11083	7N9738	.CONNECTOR BODY, PLUG	1
16	PAOZZ	11083	7N7779	.CONTACT, ELECTRICAL	3
17	PAOZZ	11083	7N9737	.CONNECTOR BODY, PLUG	2
18	PAOZZ	57094	MT92374	.CONNECTOR BODY, PLUG	1
19	PAOZZ	96906	MS20659-106	.TERMINAL, LUG	1
20	PAOZZ	77060	12103881	.TERMINAL, QUICK DISC	2
21	PAOZZ	77060	120400753	.CONNECTOR, PLUG, ELEC	1
22	PAOZZ	96906	MS20659-166	.TERMINAL, LUG	1
23	PAOZZ	96906	MS20659-165	.TERMINAL, LUG	2
24	PAOZZ	96906	MS20659-104	.TERMINAL, LUG	3
25	PAOZZ	09922	SMS9P-1	.CONNECTOR BODY, RECE	1

END OF FIGURE

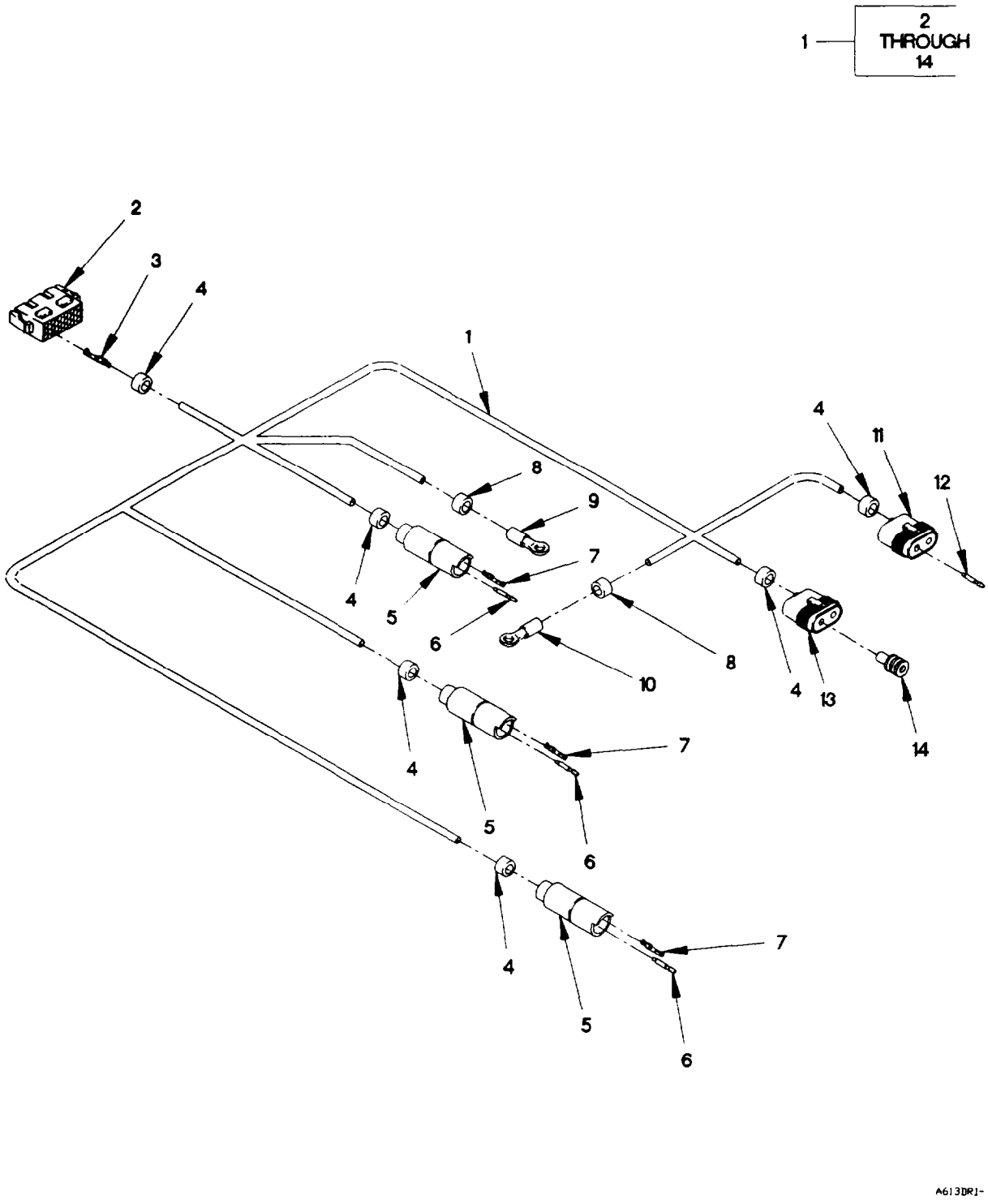

Figure 87. PTO Cable Assembly

(1) ITEM NO	(2) SMR CODE	(3) FSCM	(4) PART NUMBER	(5) DESCRIPTION AND USABLE ON CODE (UOC)	(6) QTY
				GROUP 0613: HULL OR CHASSIS WIRING HARNESS	
				FIG. 87 PTO CABLE ASSEMBLY	
1	PAOFF	0FW39	12420880	WIRING HARNESS, BRAN UOC: LWB, LWC, LWD,	1
2	PAFZZ	09922	SMS18R-1	.CONNECTOR BODY, RECE UOC: LWB, LWC, LWD,	1
3	PAFZZ	09922	SC14M-1TK6	.CONTACT, ELECTRICAL UOC: LWB, LWC, LWD,	5
4	PAOZZ	81349	M43436/1-2	.BAND, MARKER UOC: LWB, LWC, LWD,	6
5	PAFZZ	11083	7N9738	.CONNECTOR BODY, PLUG UOC: LWB, LWC, LWD,	3
6	PAFZZ	71468	110238-0195	.PIN, GROOVED, HEADLES UOC: LWB, LWC, LWD,	3
7	PAFZZ	11083	7N7779	.CONTACT, ELECTRICAL UOC: LWB, LWC, LWD,	3
8	PAOZZ	81349	M43436/1-1	.BAND, MARKER UOC: LWB, LWC, LWD,	2
9	PAOZZ	96906	MS20659-128	.TERMINAL, LUG UOC: LWB, LWC, LWD,	1
10	PAOZZ	96906	MS20659-106	.TERMINAL, LUG UOC: LWB, LWC, LWD,	1
11	PAFZZ	19207	12419176	.CONNECTOR, PLUG, ELEC UOC: LWB, LWC, LWD,	1
12	PAOZZ	77060	12103881	.TERMINAL, QUICK DISC UOC: LWB, LWC, LWD,	2
13	PAFZZ	98255	SW26098	.CONNECTOR BODY, PLUG UOC: LWB, LWC, LWD,	1
14	PAFZZ	77060	12010293	.BOOT, DUST AND MOIST UOC: LWB, LWC, LWD,	2
				END OF FIGURE	

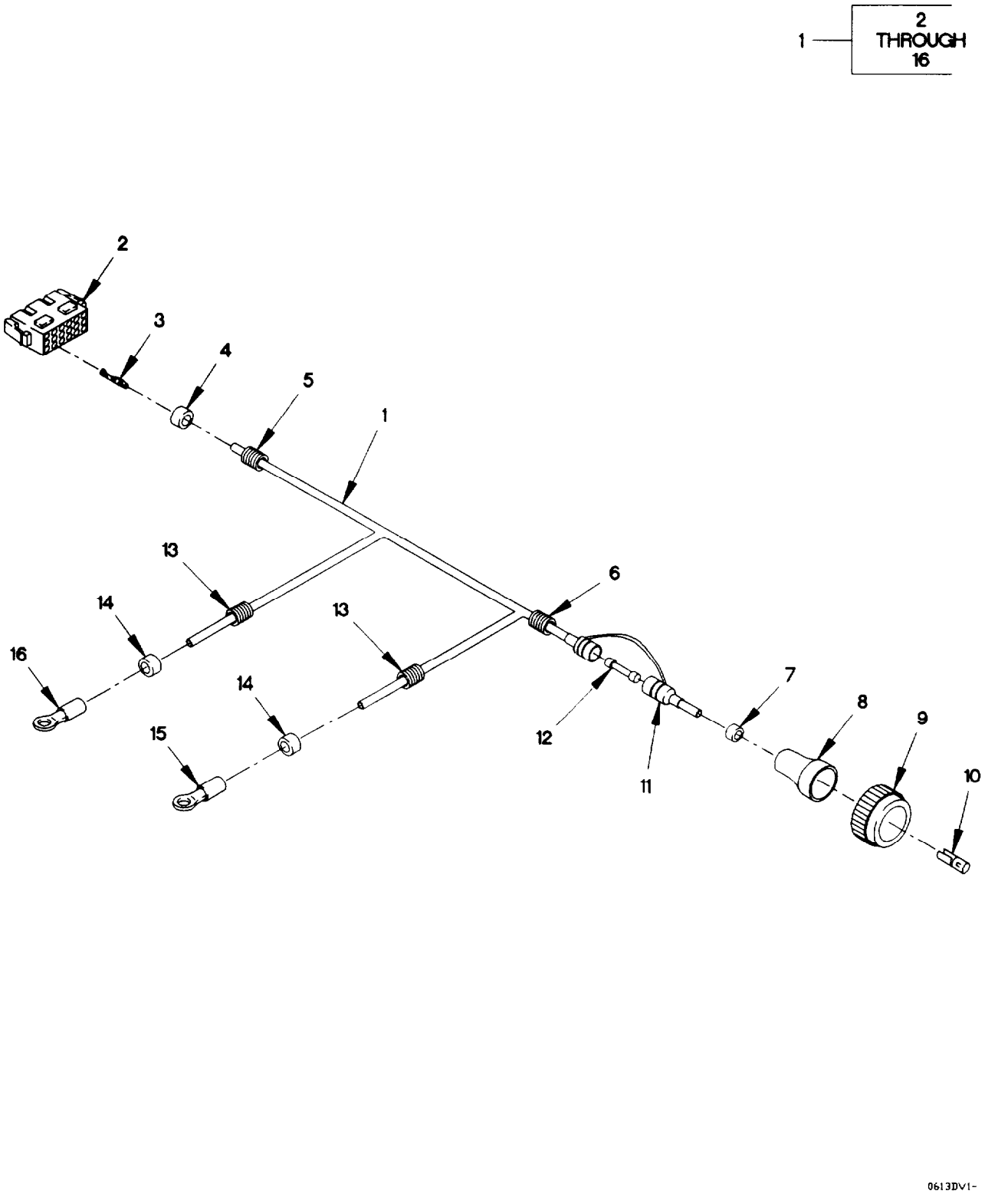

Figure 88. Door Ajar, Marker, and Blackout Control Cable Assembly

(1) ITEM NO	(2) SMR CODE	(3) FSCM	(4) PART NUMBER	(5) DESCRIPTION AND USABLE ON CODE (UOC)	(6) QTY
				GROUP 0613: HULL OR CHASSIS WIRING HARNESS	
				FIG. 88 DOOR AJAR, MARKER AND BLACKOUT CONTROL CABLE ASSEMBLY	
1	PAOFF	19207	12420885-001	CABLE ASSEMBLY	1
2	PAFZZ	09922	SMS24R-1	.CONNECTOR BODY, RECE	1
3	PAFZZ	09922	SC14M-1TK6	.CONTACT, ELECTRICAL	4
4	PAOZZ	81349	M43436/1-2	.BAND, MARKER	1
5	MOOZZ	19207	12420924-002X	.TUBING, NONMETALLIC MAKE FROM TUBING P/N: R-68234 (77060), CUT TO LENGTH UOC: LAD, LWD,	1
6	MOOZZ	19207	12420924-003X	.TUBING, NONMETALLIC MAKE FROM TUBING P/N: R-67587 (77060), CUT TO LENGTH UOC: LAD, LWD,	1
7	PAOZZ	81349	M43436/1-3	.BAND, MARKER	1
8	PAFZZ	75037	313H253-6-250	.INSULATION SLEEVING	1
9	PAFZZ	19207	12419962	.CONNECTOR, PLUG, ELEC	1
10	PAFZZ	57094	MT8002-13-1	.EYELET, METALLIC	6
11	PAOZZ	71400	HFB	.FUSEHOLDER, EXTRACTO UOC: LAD, LWD,	1
12	PAOZZ	81349	F02A32V25A	.FUSE, CARTRIDGE UOC: LAD, LWD,	1
13	MOOZZ	19207	12420924-001X	.TUBING, FLEXIBLE MAKE FROM TUBING P/N: 12420924-001 (19207) CUT TO LENGTH UOC: LAD, LWD,	1
14	PAOZZ	81349	M43436/1-1	.BAND, MARKER	1
15	PAOZZ	96906	MS20659-106	.TERMINAL, LUG	1
16	PAOZZ	96906	MS20659-128	.TERMINAL, LUG UOC: LAD, LWD,	1
				END OF FIGURE	

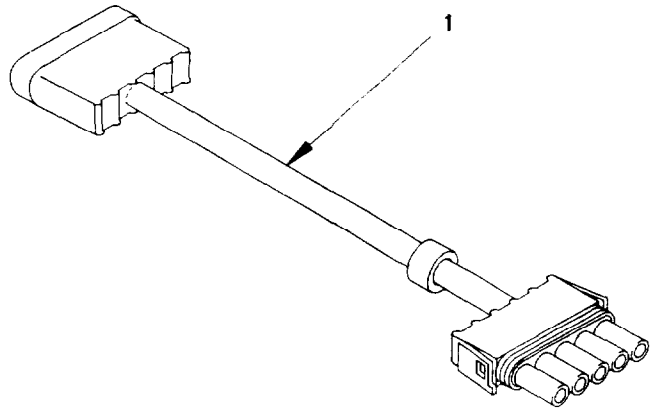

0613DE1-

Figure 89. Windshield Wiper EMI Cable Assembly

(1) ITEM NO	(2) SMR CODE	(3) FSCM	(4) PART NUMBER	(5) DESCRIPTION AND USABLE ON CODE (UOC)	(6) QTY
				GROUP 0613: HULL OR CHASSIS WIRING HARNESS	
				FIG. 89 WINDSHIELD WIPER EMI CABLE ASSEMBLY	
1	PAOZZ	0FW39	12420890-001	CABLE ASSEMBLY, SPEC	1
				END OF FIGURE	

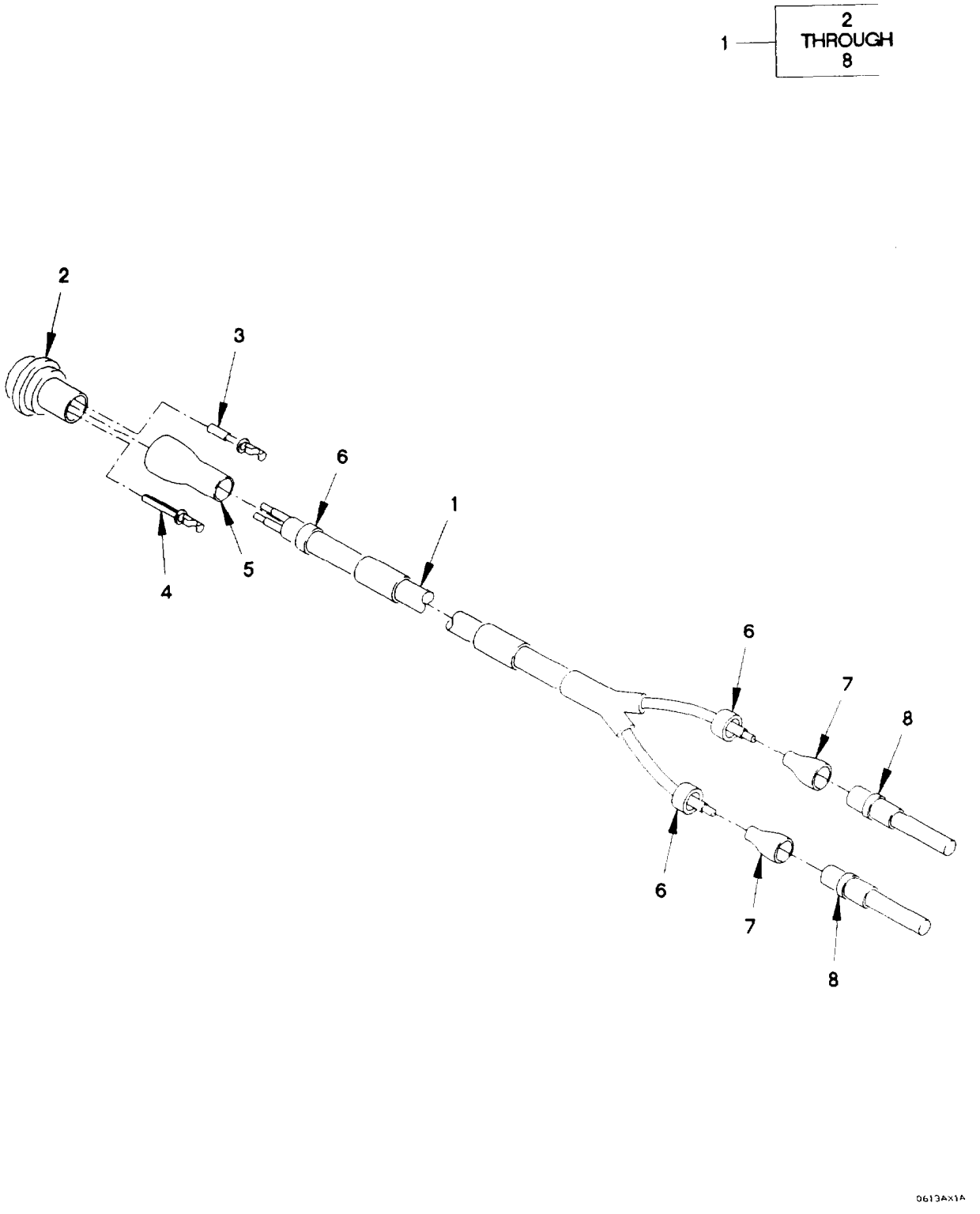

Figure 90. Chemical Kit Cable Assembly

(1) ITEM NO	(2) SMR CODE	(3) FSCM	(4) PART NUMBER	(5) DESCRIPTION AND USABLE ON CODE (UOC)	(6) QTY
				GROUP 0613: HULL OR CHASSIS WIRING HARNESS	
				FIG. 90 CHEMICAL KIT CABLE ASSEMBLY	
1	PAOFF	19207	12417279	CABLE ASSEMBLY, SPEC CHEMICAL KIT	1
2	PAFZZ	11083	7N9737	.CONNECTOR BODY, PLUG	1
3	PAFZZ	11083	7N7779	.CONTACT, ELECTRICAL	1
4	PAFZZ	71468	110238-0195	.PIN, GROOVED, HEADLES	1
5	PAFZZ	75037	313H232-6-250	.INSULATION SLEEVING	1
6	PAFZZ	81349	M43436/1-1	.BAND, MARKER	3
7	PAFZZ	81349	M23053/4-302-0	.INSULATION SLEEVING	2
8	PAFZZ	81349	M39029/4-111	.CONTACT, ELECTRICAL	2
				END OF FIGURE	

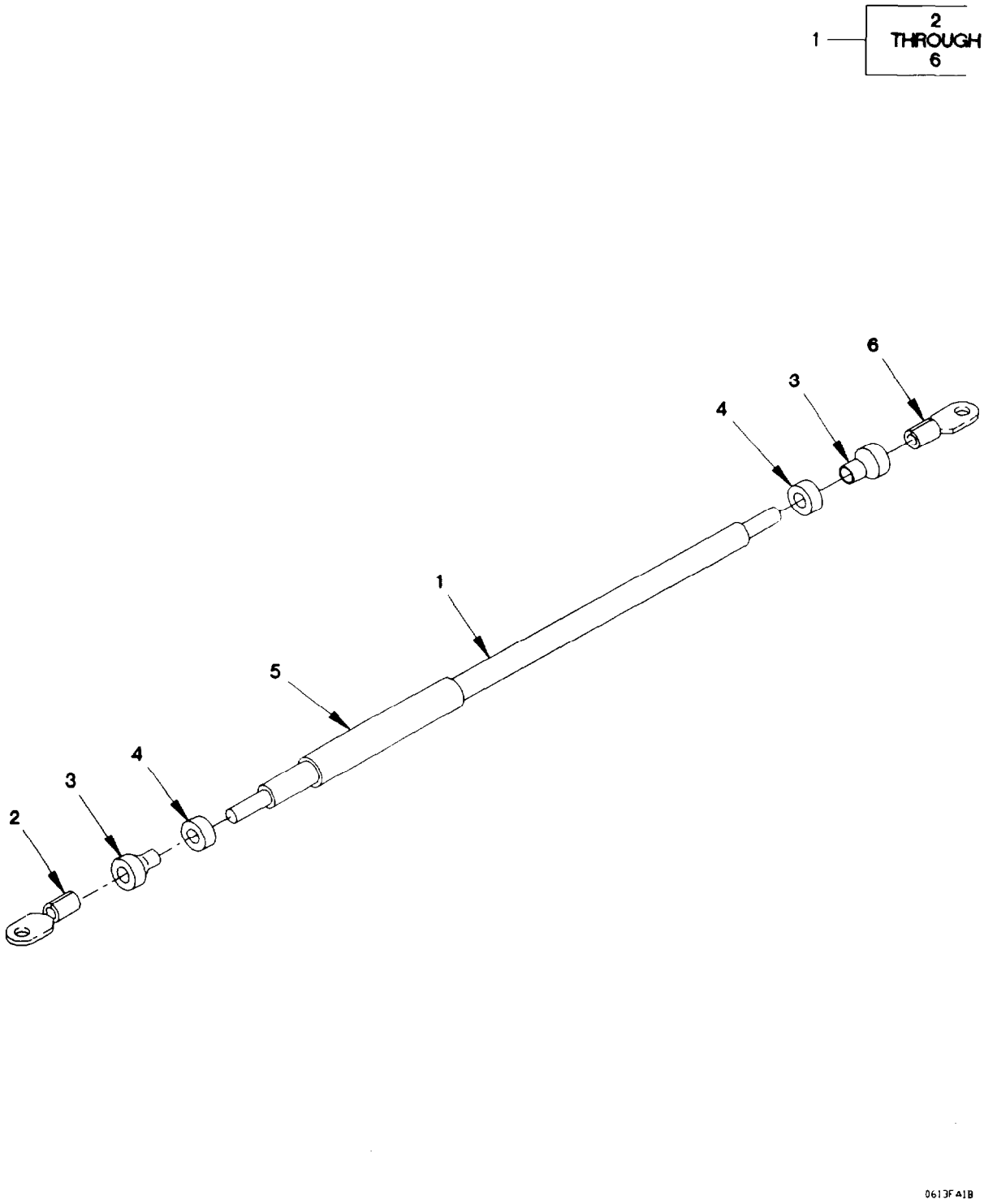

Figure 91. Starter Ground Cable Assembly

(1) ITEM NO	(2) SMR CODE	(3) FSCM	(4) PART NUMBER	(5) DESCRIPTION AND USABLE ON CODE (UOC)		(6) QTY
				GROUP 0613: HULL OR CHASSIS WIRING HARNESS		
				FIG. 91 STARTER GROUND CABLE ASSEMBLY		
1	XDOOO	19207	12420897	CABLE ASSY, STARTER MAKE FROM WIRE P/N: M16878/16BWT0 (81349), CUT TO LENGTH		1
2	PAOZZ	96906	MS20659-136	.TERMINAL, LUG		1
3	PAOZZ	7V059	EPS-300 3/4 BLAC K	.INSULATION, SLEEVING	V	
4	PAOZZ	81349	M43436/1-3	.BAND, MARKER		2
5	PAOZZ	20999	SCS-HB21	.MARKER SET, IDENTIFI		1
6	PAOZZ	96906	MS20659-120	.TERMINAL, LUG		1
				END OF FIGURE		

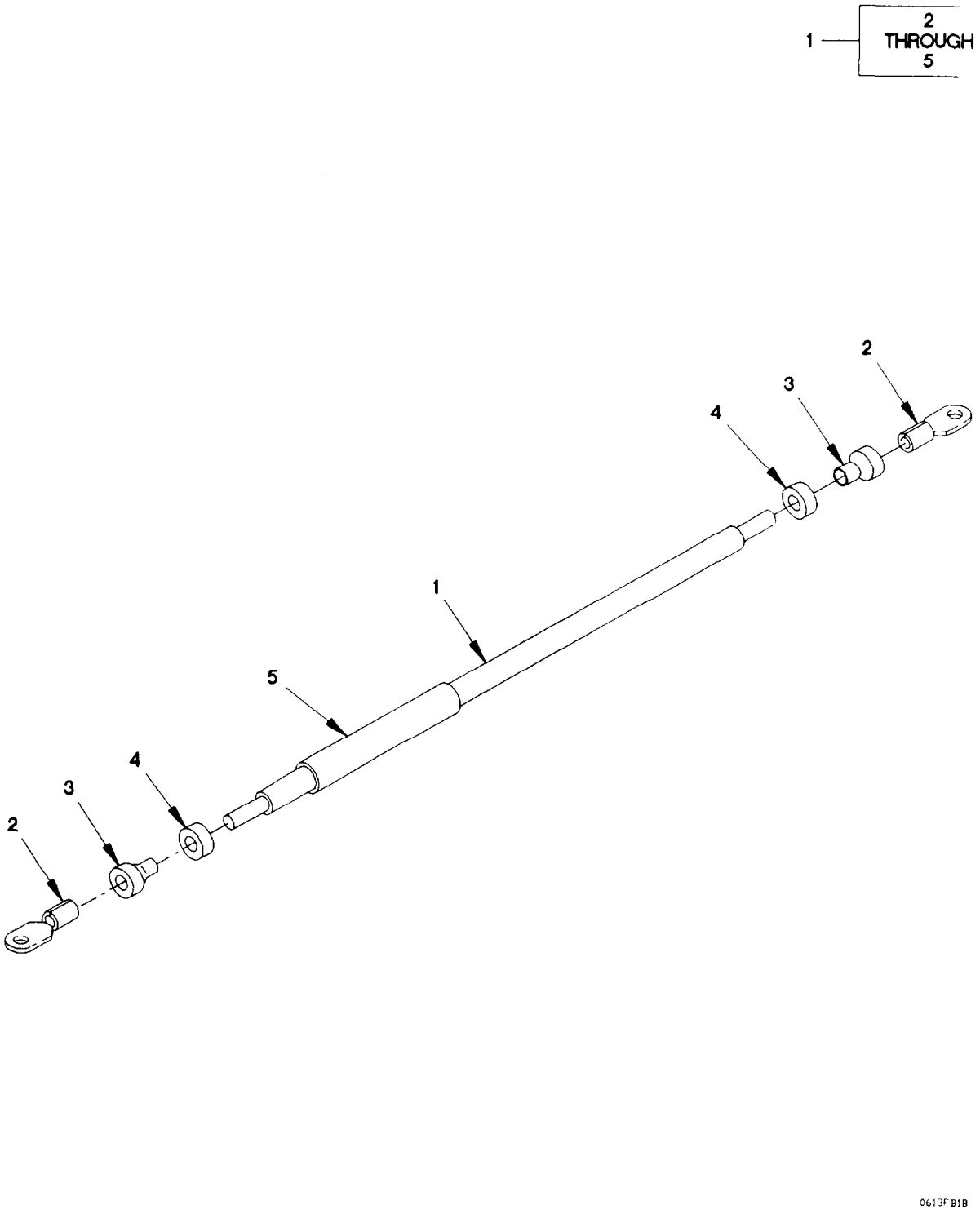

Figure 92. 24V Reverse Polarity Relay Cable Assembly

(1) ITEM NO	(2) SMR CODE	(3) FSCM	(4) PART NUMBER	(5) DESCRIPTION AND USABLE ON CODE (UOC)	(6) QTY
				GROUP 0613: HULL OR CHASSIS WIRING HARNESS	
				FIG. 92 24V REVERSE POLARITY RELAY CABLE ASSEMBLY	
1	XDOOO	19207	12420898	CABLE ASSY, RELAY MAKE FROM WIRE P/N M16878/16BUS0 (81349), CUT TO LENGTH	1
2	PAOZZ	96906	MS20659-118	.TERMINAL, LUG	2
3	PAOZZ	7V059	EPS-300 3/4 BLAC K	.INSULATION SLEEVING	V
4	PAOZZ	81349	M43436/1-3	.BAND, MARKER	2
5	PAOZZ	20999	SCS-HB21	.MARKER SET, IDENTIFI	1
				END OF FIGURE	

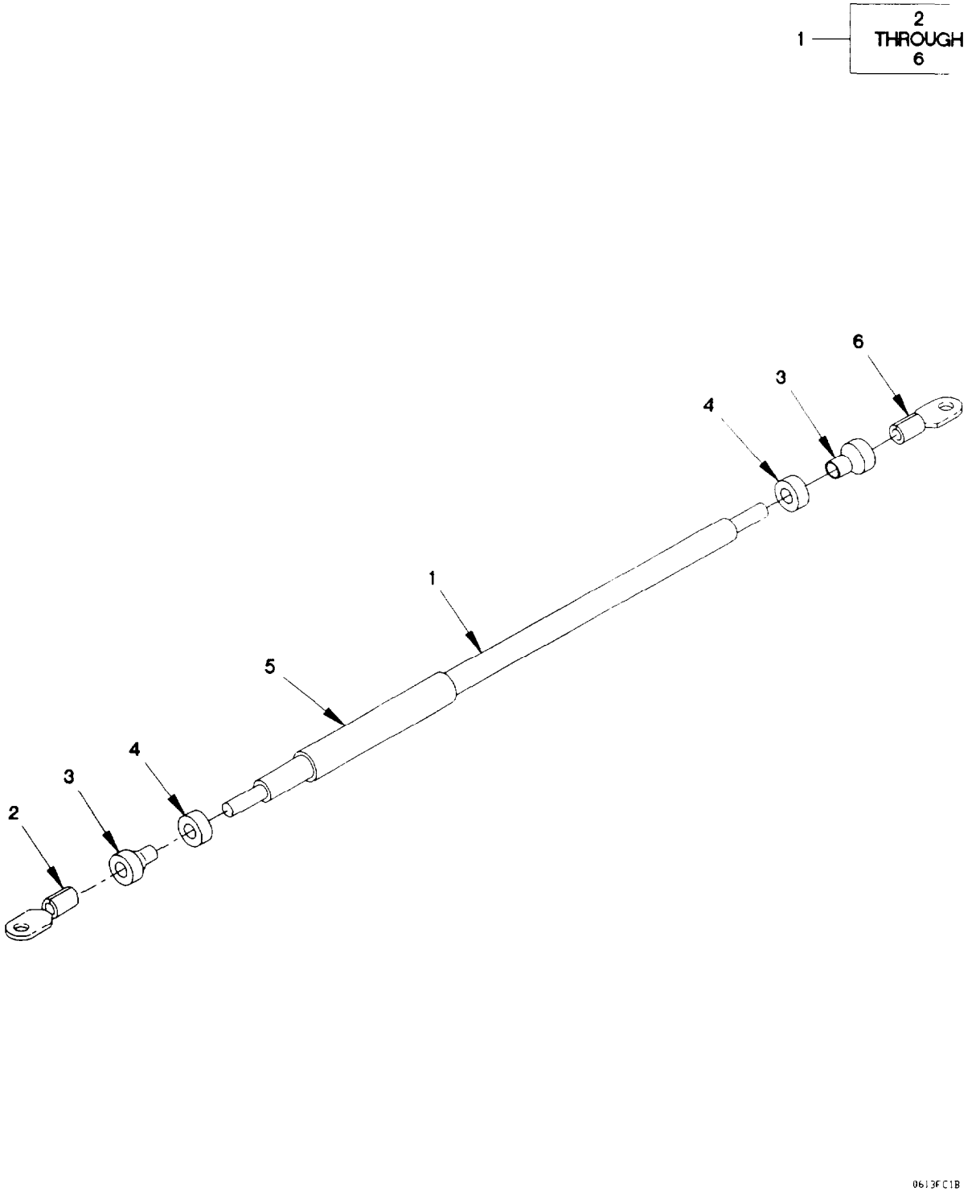

Figure 93. 24V Alternator Cable Assembly

(1) ITEM NO	(2) SMR CODE	(3) FSCM	(4) PART NUMBER	(5) DESCRIPTION AND USABLE ON CODE (UOC)	(6) QTY
				GROUP 0613: HULL OR CHASSIS WIRING HARNESS	
				FIG. 93 24V ALTERNATOR CABLE ASSEMBLY	
1	XDOOO	19207	12420899	CABLE ASSY, 24V ALT MAKE FROM WIRE P/N: M16878/16BUS0 (81349), CUT TO LENGTH	1
2	PAOZZ	96906	MS20659-151	.TERMINAL, LUG	1
3	PAOZZ	7V059	EPS-300 3/4 BLACK	.INSULATION SLEEVING	V
4	PAOZZ	81349	M43436/1-3	.BAND, MARKER	2
5	PAOZZ	20999	SCS-HB21	.MARKER SET, IDENTIFI	1
6	PAOZZ	96906	MS20659-118	.TERMINAL, LUG	1
				END OF FIGURE	

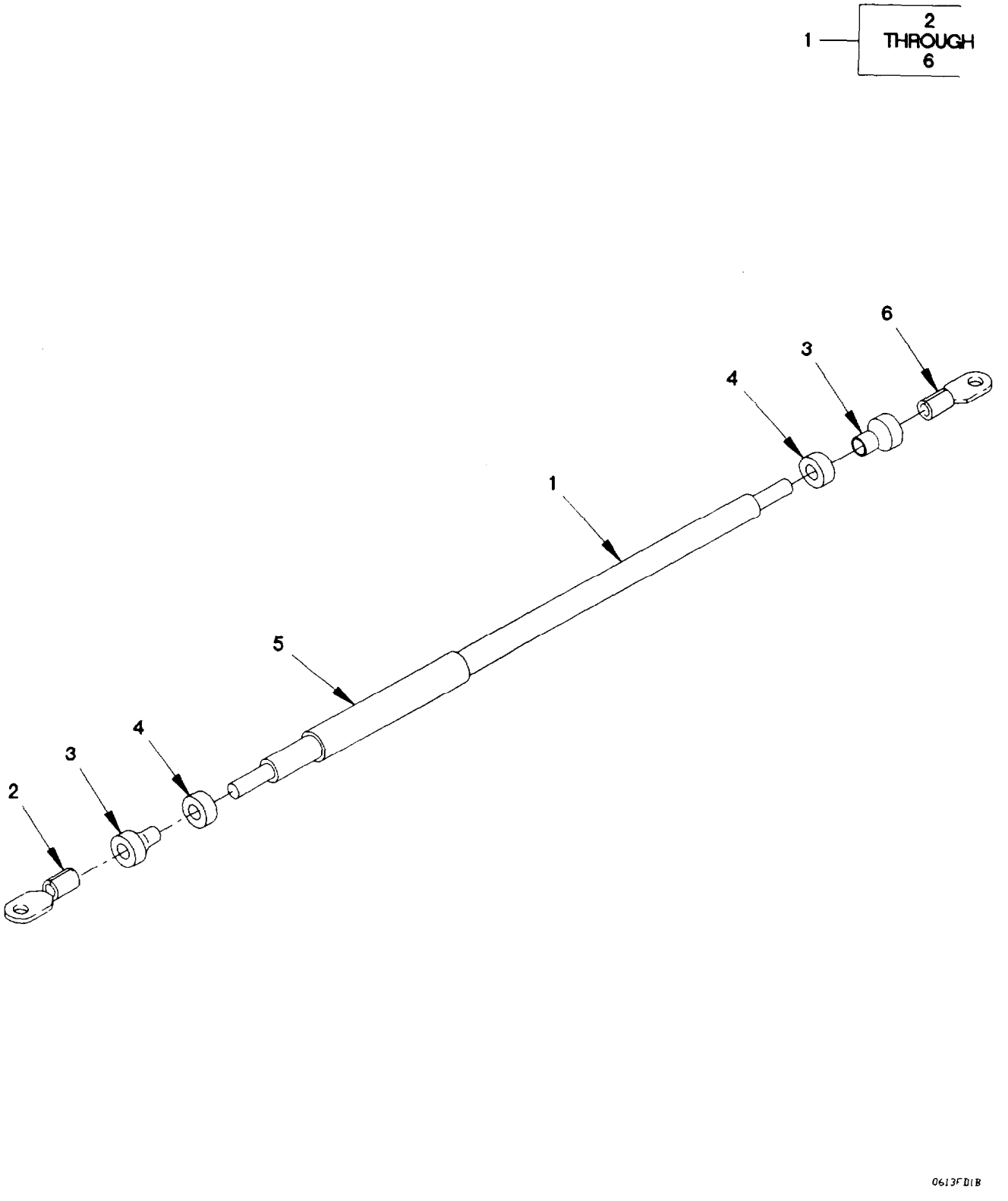

Figure 94. 24V Power Distribution Panel Cable Assembly

(1) ITEM NO	(2) SMR CODE	(3) FSCM	(4) PART NUMBER	(5) DESCRIPTION AND USABLE ON CODE (UOC)	(6) QTY
				GROUP 0613: HULL OR CHASSIS WIRING HARNESS	
				FIG. 94 24V POWER DISTRIBUTION PANEL CABLE ASSEMBLY	
1	XDOOO	19207	12420900	CABLE ASSY, 24V PWR MAKE FROM WIRE P/N: M16878/16BRL0 (81349), CUT TO LENGTH	1
2	PAOZZ	96906	M20659-112	.TERMINAL, LUG	1
3	PAOZZ	7V059	EPS-300 3/4 BLACK	.INSULATION SLEEVING	V
4	PAOZZ	81349	M43436/1-2	.BAND, MARKER	2
5	PAOZZ	20999	SCS-HB21	.MARKER SET, IDENTIFI	1
6	PAOZZ	96906	MS20659-132	.TERMINAL, LUG	1
				END OF FIGURE	

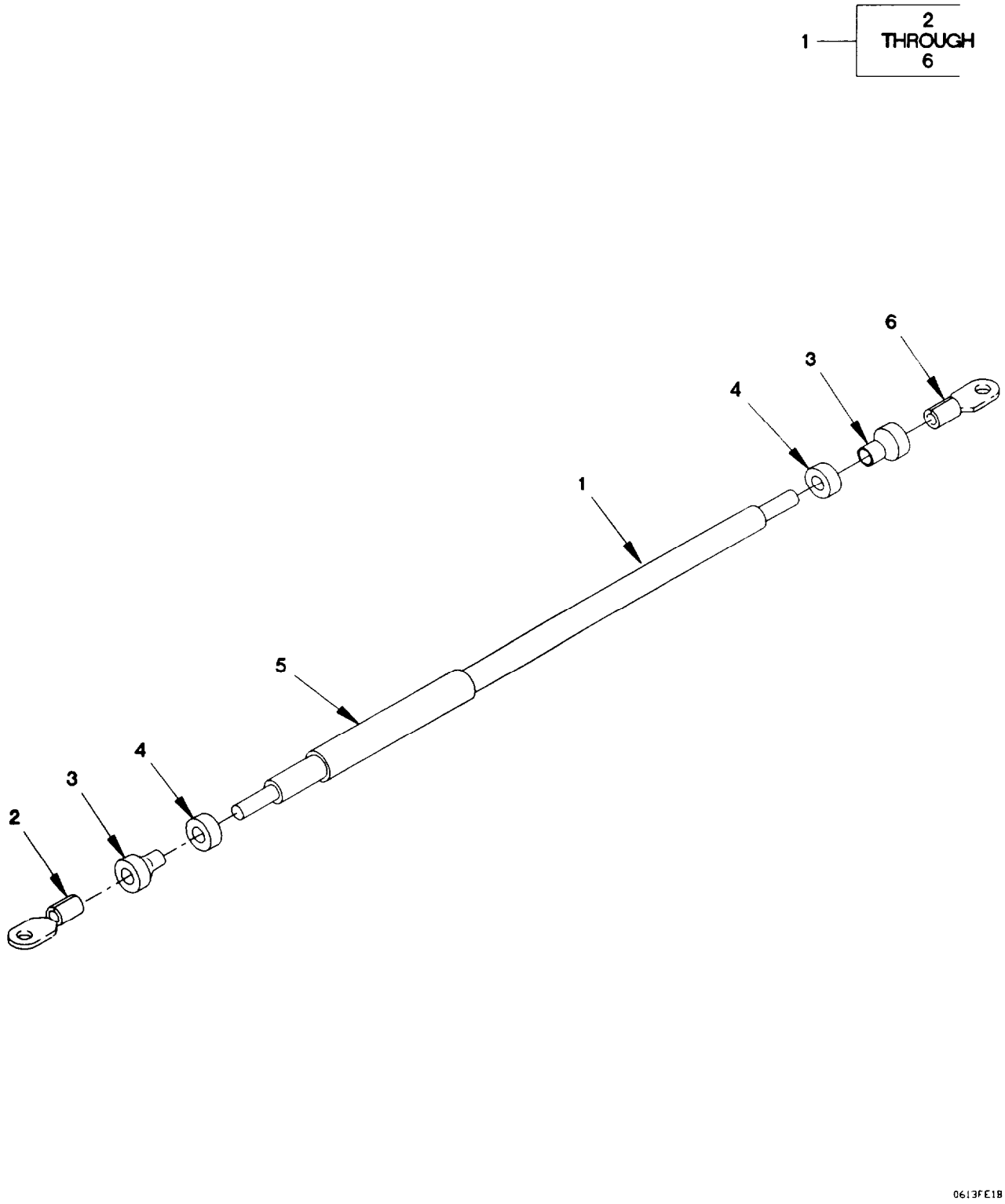

Figure 95. 12V Power Distribution Panel Cable Assembly

(1) ITEM NO	(2) SMR CODE	(3) FSCM	(4) PART NUMBER	(5) DESCRIPTION AND USABLE ON CODE (UOC)	(6) QTY
				GROUP 0613: HULL OR CHASSIS WIRING HARNESS	
				FIG. 95 12V POWER DISTRIBUTION PANEL CABLE ASSEMBLY	
1	XDOOO	19207	12420901	CABLE ASSY, 12V PWR MAKE FROM WIRE P/M: M16878/16BRL0 (81349), CUT TO LENGTH	1
2	PAOZZ	96906	MS20659-112	.TERMINAL, LUG	1
3	PAOZZ	7V059	EPS-300 3/4 BLAC K	.INSULATION SLEEVING	V
4	PAOZZ	81349	M43436/1-2	BAND, MARKER	2
5	PAOZZ	20999	SCS-HB21	.MARKER SET, IDENTIFI	1
6	PAOZZ	96906	MS20659-132	.TERMINAL, LUG	1
				END OF FIGURE	

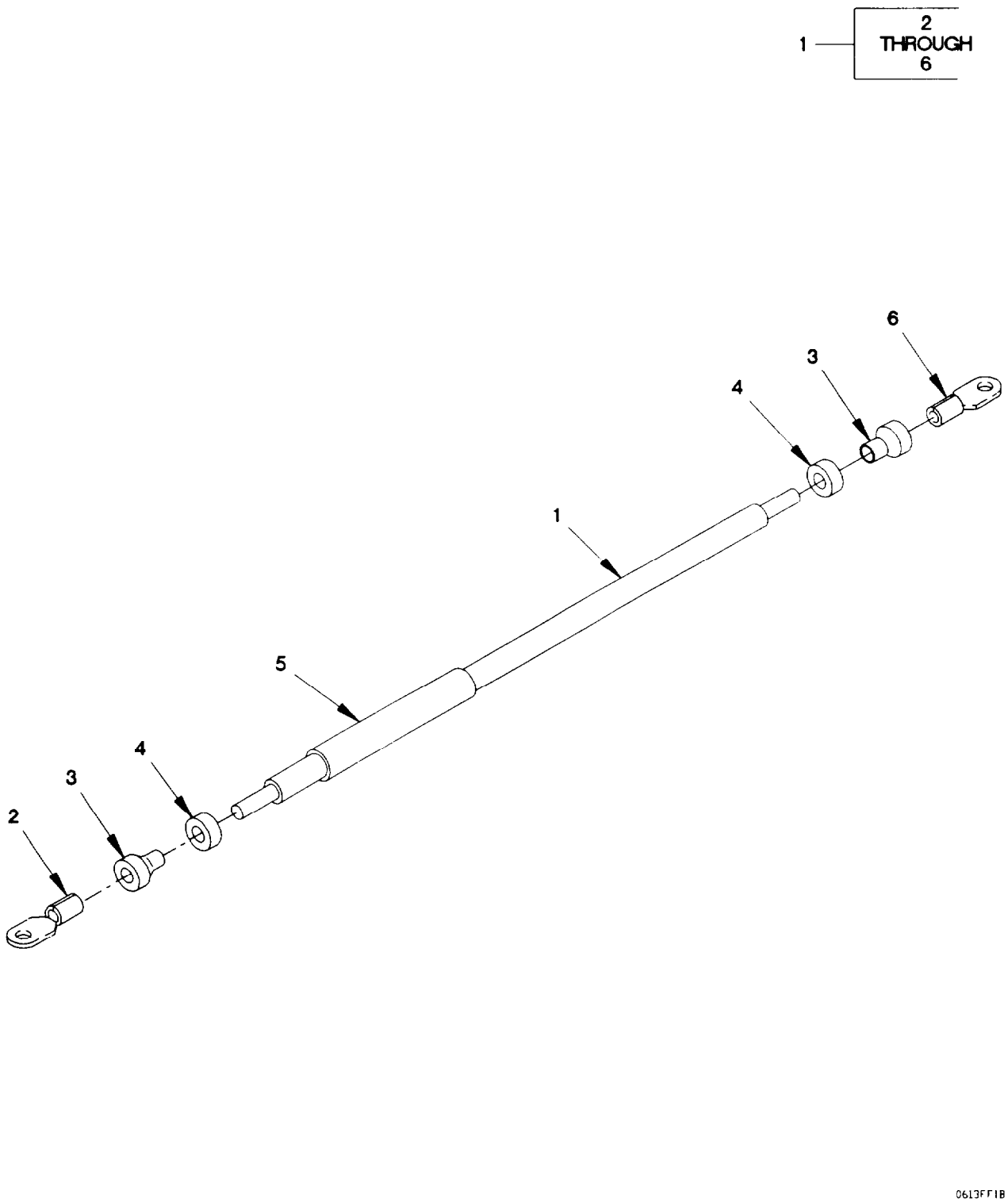

Figure 96. Power Distribution Panel Ground Cable Assembly

(1) ITEM NO	(2) SMR CODE	(3) FSCM	(4) PART NUMBER	(5) DESCRIPTION AND USABLE ON CODE (UOC)	(6) QTY
				GROUP 0613: HULL OR CHASSIS WIRING HARNESS	
				FIG.96 POWER DISTRIBUTION PANEL GROUND CABLE ASSEMBLY	
1	XDOOO	19207	12420902	CABLE ASSY,POWER MAKE FROM WIRE P/N: M16878/16BRLO (81349),CUT TO LENGTH.....*.....	1
2	PAOZZ	96906	MS20659-111	.TERMINAL,LUG.....	1
3	PAOZZ	7V059	EPS-300 3/4 BLACK	.INSULATION SLEEVING.....	V
4	PAOZZ	81349	M43436/1-2	.BAND,MARKER.....	2
5	PAOZZ	20999	SCS-HB21	.MARKER SET,IDENTIFI.....	1
6	PAOZZ	96906	MS20659-132	.TERMINAL,LUG.....	1

END OF FIGURE

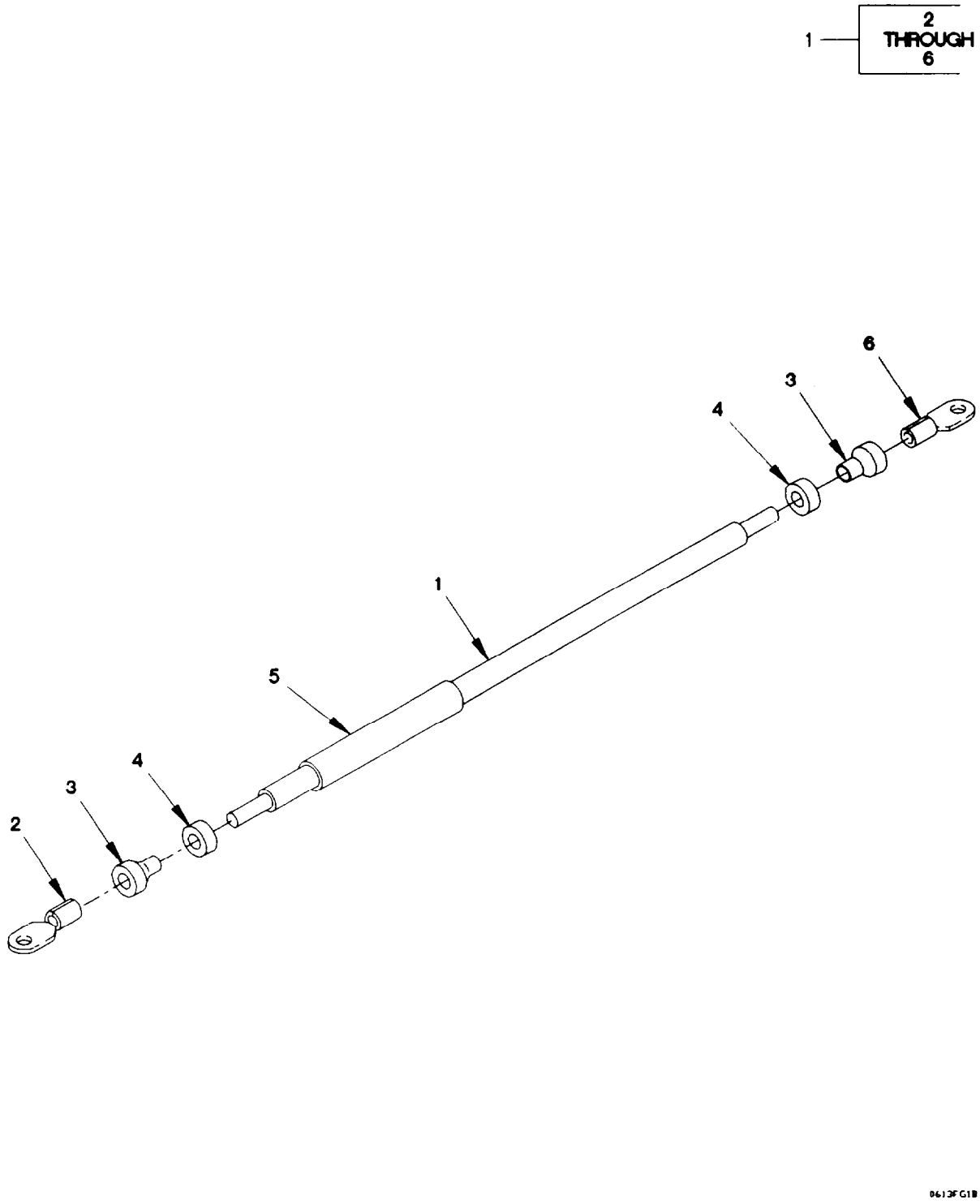

Figure 97. Starter Power Cable Assembly

(1) ITEM NO	(2) SMR CODE	(3) FSCM	(4) PART NUMBER	(5) DESCRIPTION AND USABLE ON CODE (UOC)	(6) QTY
				GROUP 0613: HULL OR CHASSIS WIRING HARNESS	
				FIG. 96 POWER DISTRIBUTION PANEL GROUND CABLE ASSEMBLY	
1	XDOOO	19207	12420902	CABLE ASSY, POWER MAKE FROM WIRE P/N: M16878/16BRL0 (81349), CUT TO LENGTH	1
2	PAOZZ	96906	MS20659-111	.TERMINAL, LUG	1
3	PAOZZ	7V059	EPS-300 3/4 BLACK	.INSULATION, SLEEVING	V
4	PAOZZ	81349	M43436/1-2	.BAND, MARKER	2
5	PAOZZ	20999	SCS-HB21	.MARKER SET, IDENTIFI	1
6	PAOZZ	96906	MS20659-132	.TERMINAL, LUG	1
				END OF FIGURE	

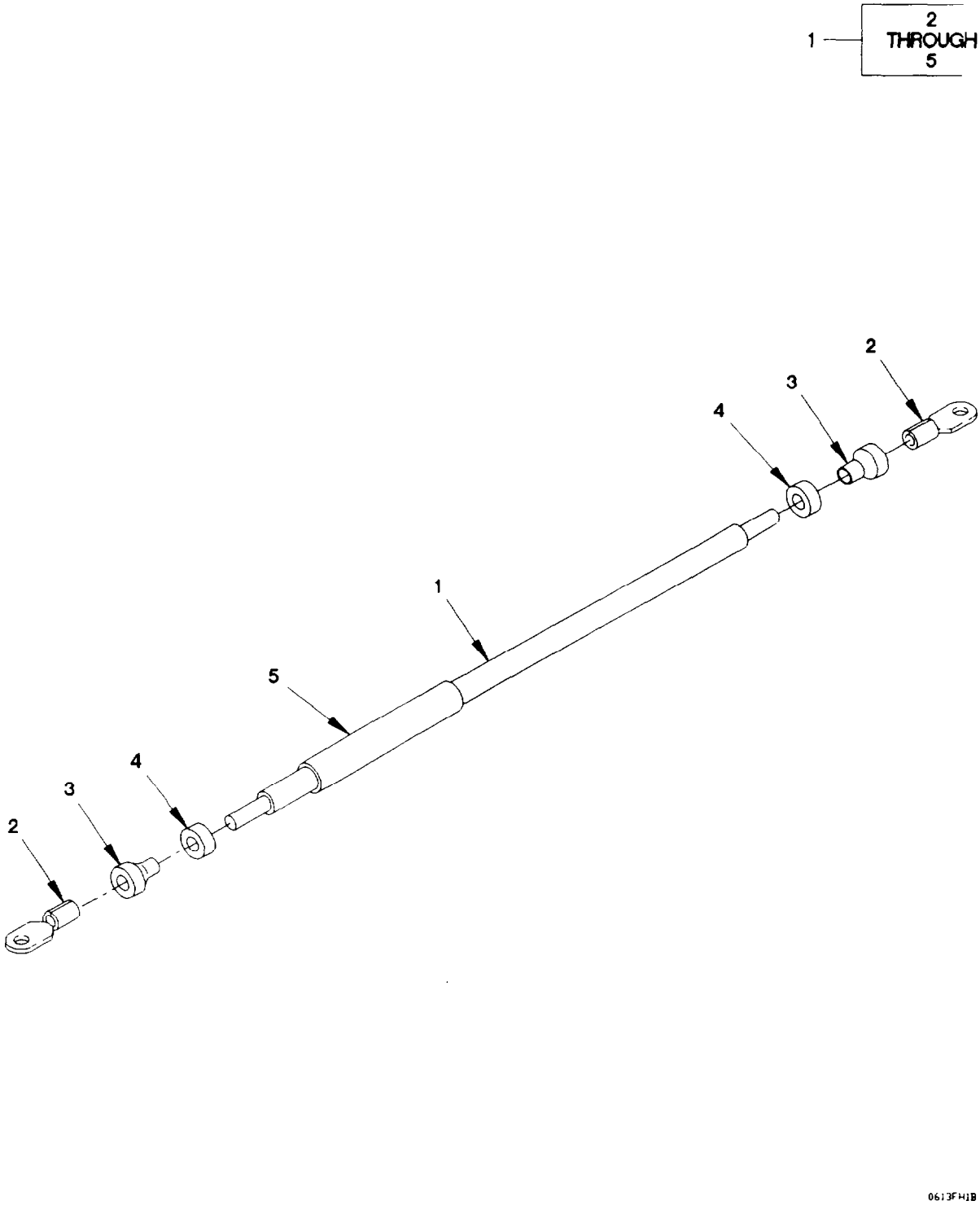

Figure 98. Battery Ground Cable Assembly

(1) ITEM NO	(2) SMR CODE	(3) FSCM	(4) PART NUMBER	(5) DESCRIPTION AND USABLE ON CODE (UOC)		(6) QTY
				GROUP 0613: HULL OR CHASSIS WIRING HARNESS		
				FIG. 97 STARTER POWER CABLE ASSEMBLY		
1	XDOOO	19207	12420904	CABLE ASSY, STARTER		1
2	PAOZZ	96906	MS20659-120	.TERMINAL, LUG		1
3	PAOZZ	7V059	EPS-300 3/4 BLAC K	.INSULATION, SLEEVING	V	
4	PAOZZ	81349	M43436/1-3	.BAND, MARKER		2
5	PAOZZ	20999	SCS-HB21	.MARKER SET, IDENTIFICATI		1
6	PAOZZ	96906	MS20659-136	.TERMINAL, LUG		1
				END OF FIGURE		

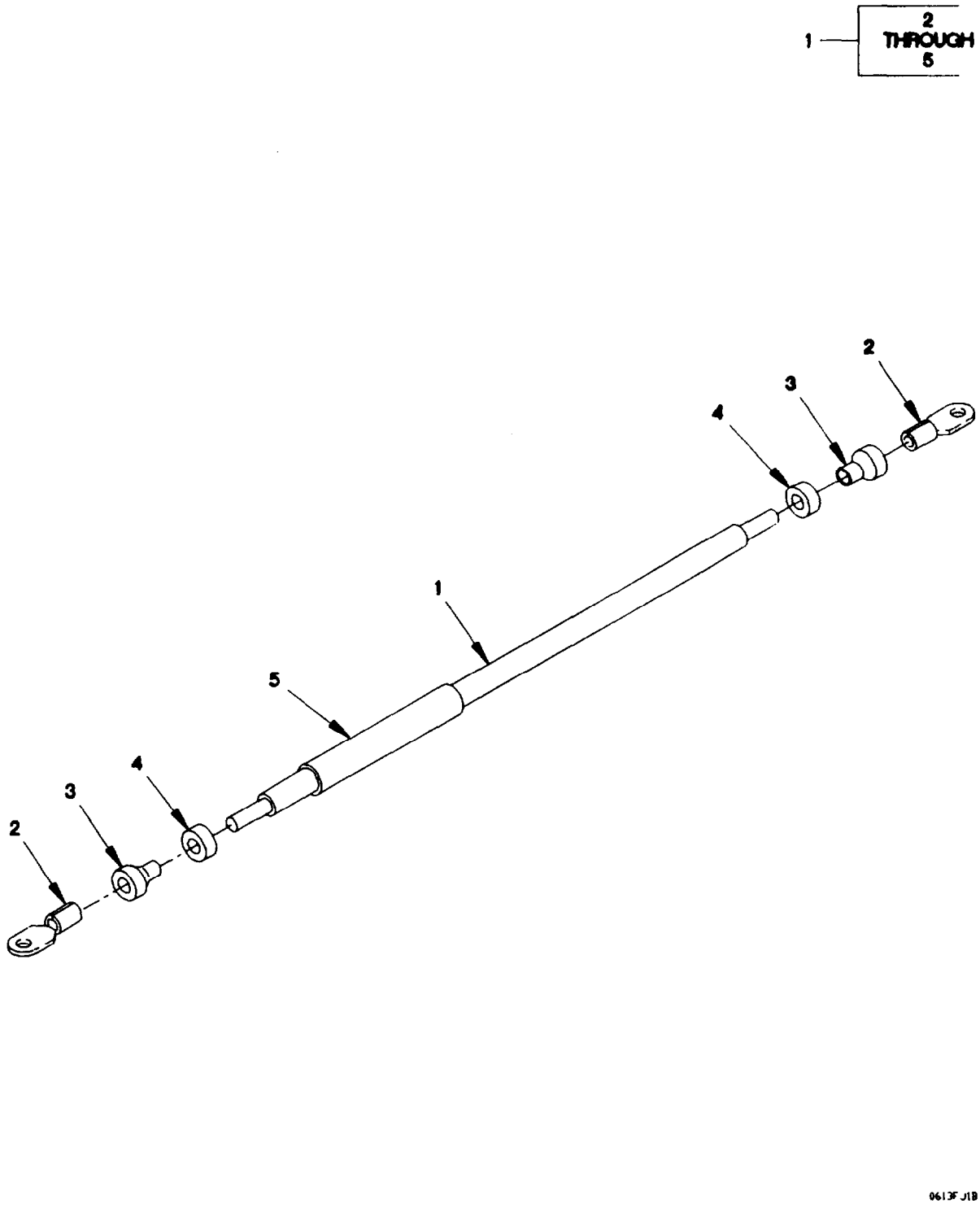

Figure 99. 12V Alternator Cable Assembly

(1) ITEM NO	(2) SMR CODE	(3) FSCM	(4) PART NUMBER	(5) DESCRIPTION AND USABLE ON CODE (UOC)		(6) QTY
				GROUP 0613: HULL OR CHASSIS WIRING HARNESS		
				FIG. 98 BATTERY GROUND CABLE ASSEMBLY		
1	XDOOO	19207	12420905	CABLE ASSY, BATTERY		1
2	PAOZZ	96906	MS20659-120	.TERMINAL, LUG		2
3	PAOZZ	7V059	EPS-300 3/4 BLAC K	.INSULATION SLEEVING	V	
4	PAOZZ	81349	M43436/1-3	.BAND MARKER		2
5	PAOZZ	20999	SCS-HB21	.MARKER SET, IDENTIFI		1
				END OF FIGURE		

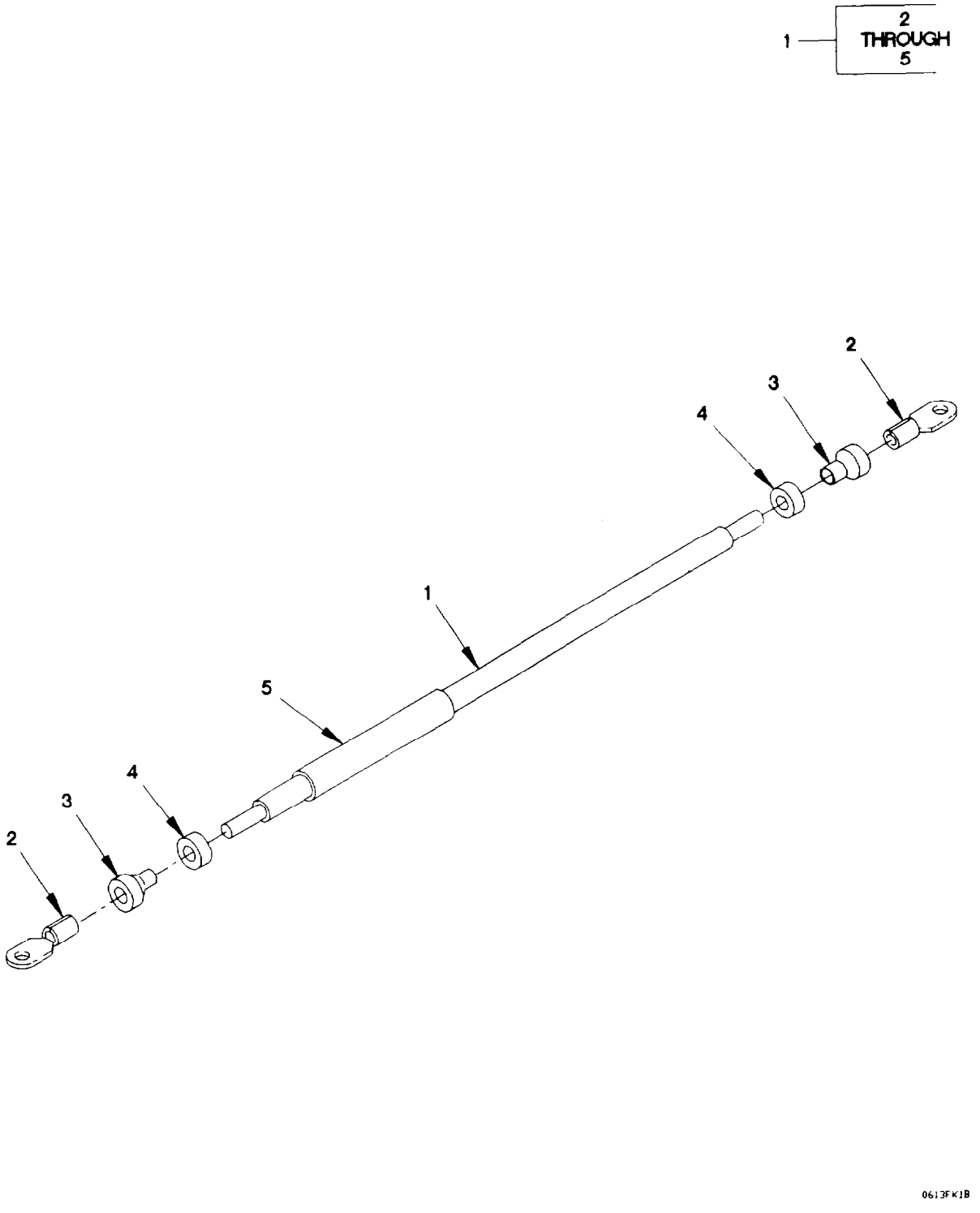

Figure 100. 12V Reverse Polarity Relay Cable Assembly

(1) ITEM NO	(2) SMR CODE	(3) FSCM	(4) PART NUMBER	(5) DESCRIPTION AND USABLE ON CODE (UOC)	(6) QTY
				GROUP 0613: HULL OR CHASSIS WIRING HARNESS	
				FIG. 99 12V ALTERNATOR CABLE ASSEMBLY	
1	XDOOO	19207	12420906	CABLE ASSY, 12V ALT MAKE FROM WIRE P/N: M16878/16BUS0 (81349), CUT TO LENGTH	1
2	PAOZZ	96906	MS20659-118	.TERMINAL, LUG	2
3	PAOZZ	7V059	EPS-300 3/4 BLACK	.INSULATION, SLEEVING	V
4	PAOZZ	813479	M43436/1-3	.BAND, MARKER	2
5	PAOZZ	20999	SCS-HB21	.MARKER SET, IDENTIFI	1
				END OF FIGURE	

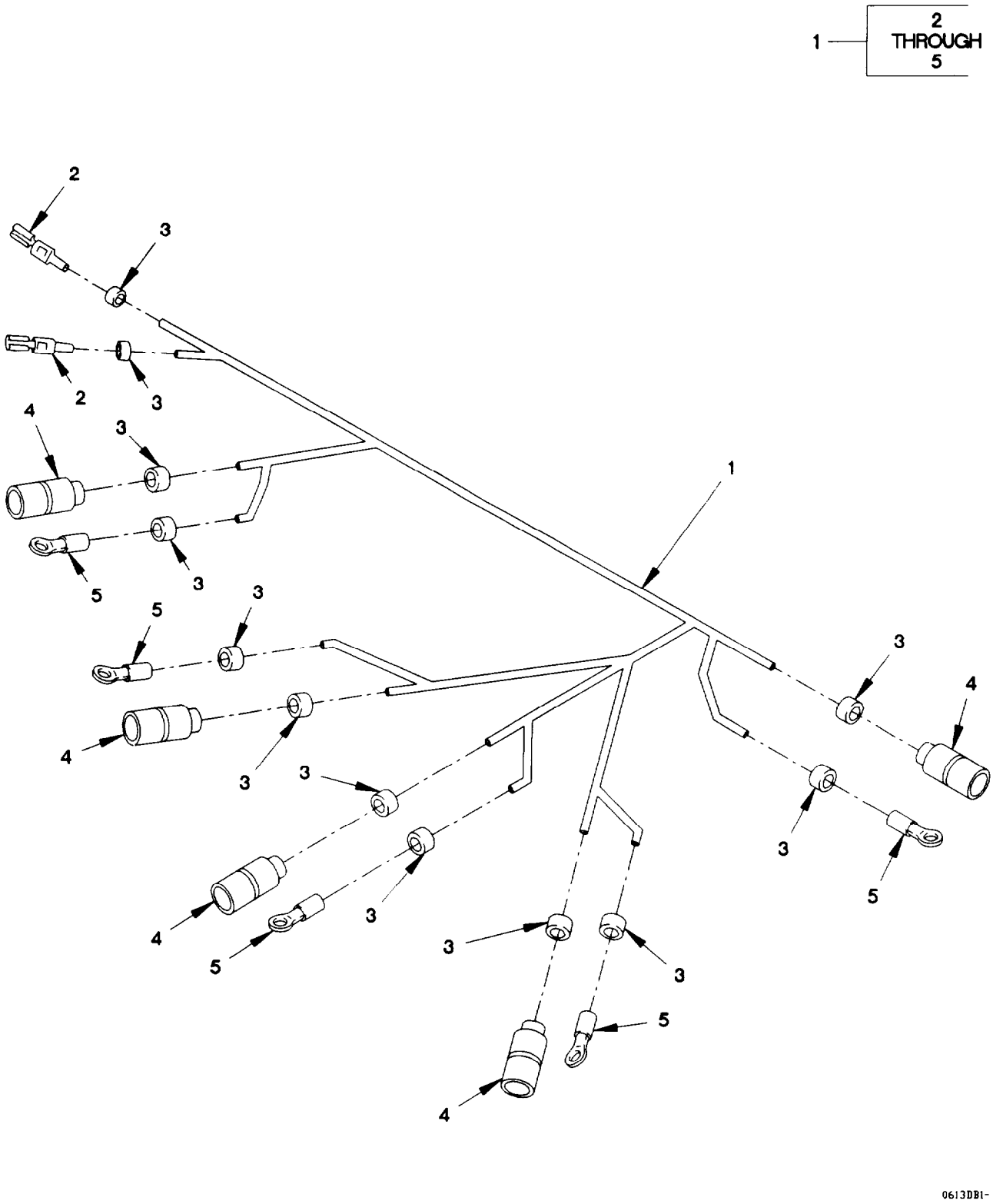

Figure 101. Clearance Light Cable Assembly

(1) ITEM NO	(2) SMR CODE	(3) FSCM	(4) PART NUMBER	(5) DESCRIPTION AND USABLE ON CODE (UOC)	(6) QTY
				GROUP 0613: HULL OR CHASSIS WIRING HARNESS	
				FIG. 100 12V REVERSE POLARITY RELAY CABLE ASSEMBLY	
1	XDOOO	0FW39	12420955	CABLE ASSY, REVERSE POLARITY RELAY, MAKE FROM WIRE P/N: M16878/16BUS0 (81349), CUT TO LENGTH	1
2	PAOZZ	96906	MS20659-118	.TERMINAL LUG	2
3	PAOZZ	7V059	EPS-300 3/4 BLAC K	.INSULATION, SLEEVING	V
4	PAOZZ	81349	M43436/1-3	.BAND MARKER	2
5	PAOZZ	20999	SCS-HB21	.MARKER SET, IDENTIFI	1
				END OF FIGURE	

(1) ITEM NO	(2) SMR CODE	(3) FSCM	(4) PART NUMBER	(5) DESCRIPTION AND USABLE ON CODE (UOC)	(6) QTY
				GROUP 0613: HULL OR CHASSIS WIRING HARNESS	
				FIG. 101 CLEARANCE LIGHT CABLE ASSEMBLY	
1	PAOOO	0FW39	12420872	CABLE ASSEMBLY, SPEC CLEARANCE LIGHT UOC: LAA, LAB, LAD, LWB, LWD,	1
2	PAOZZ	74025	10476-103	.TERMINAL, QUICK DISC UOC: LAA, LAB, LAD, LWB, LWD,	2
3	PAOZZ	81349	M43436/1-1	.BAND, MARKER UOC: LAA, LAB, LAD, LWB, LWD,	12
4	PAOZZ	96906	MS27144-2	.CONNECTOR, PLUG, ELEC UOC: LAA, LAB, LAD, LWB, LWD,	5
5	PAOZZ	96906	MS20659-104	.TERMINAL, LUG UOC: LAA, LAB, LAD, LWB, LWD,	5
				END OF FIGURE	

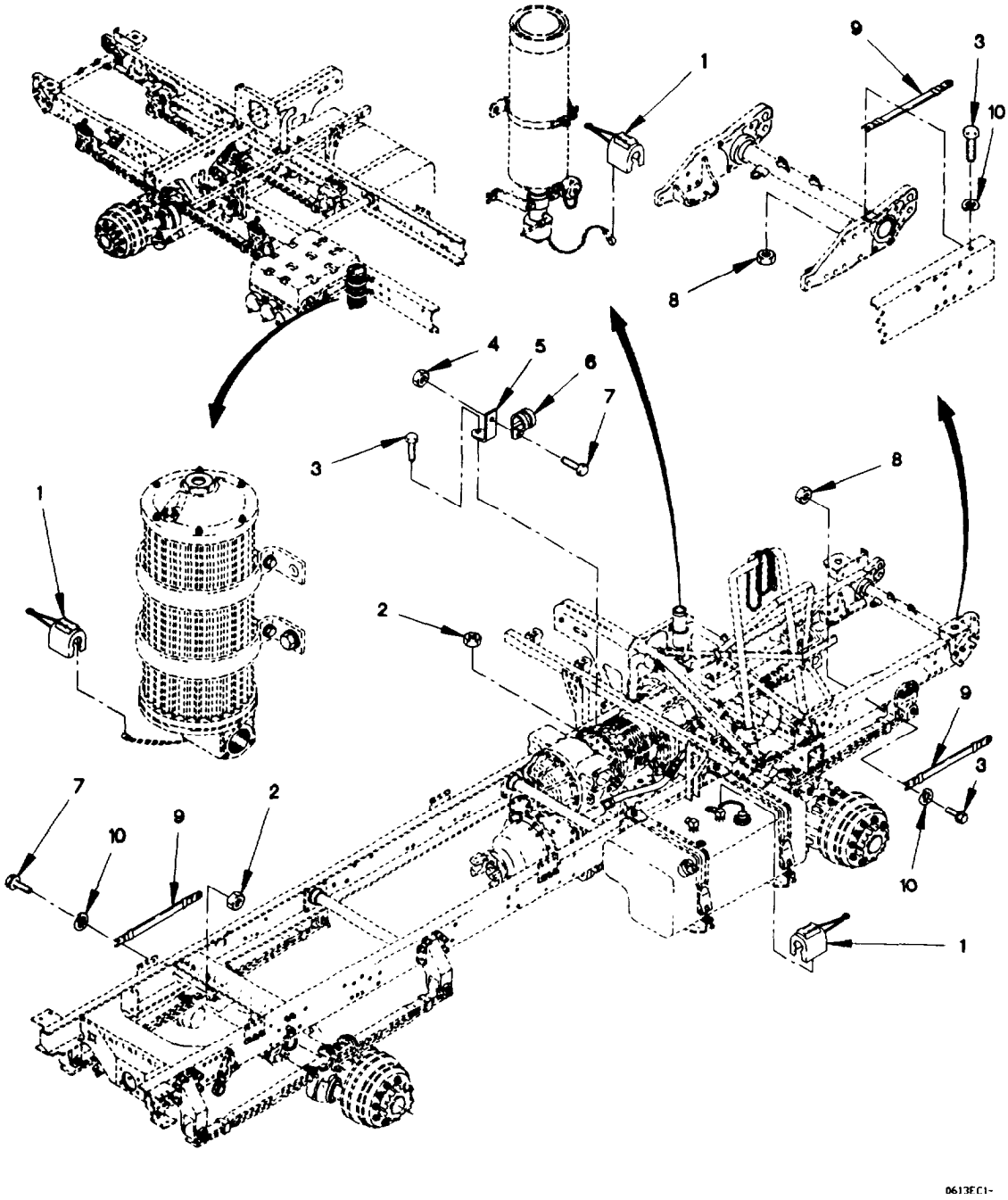

Figure 102. Starter to Chassis Ground Cable and Clamps (Sheet 1 of 2)

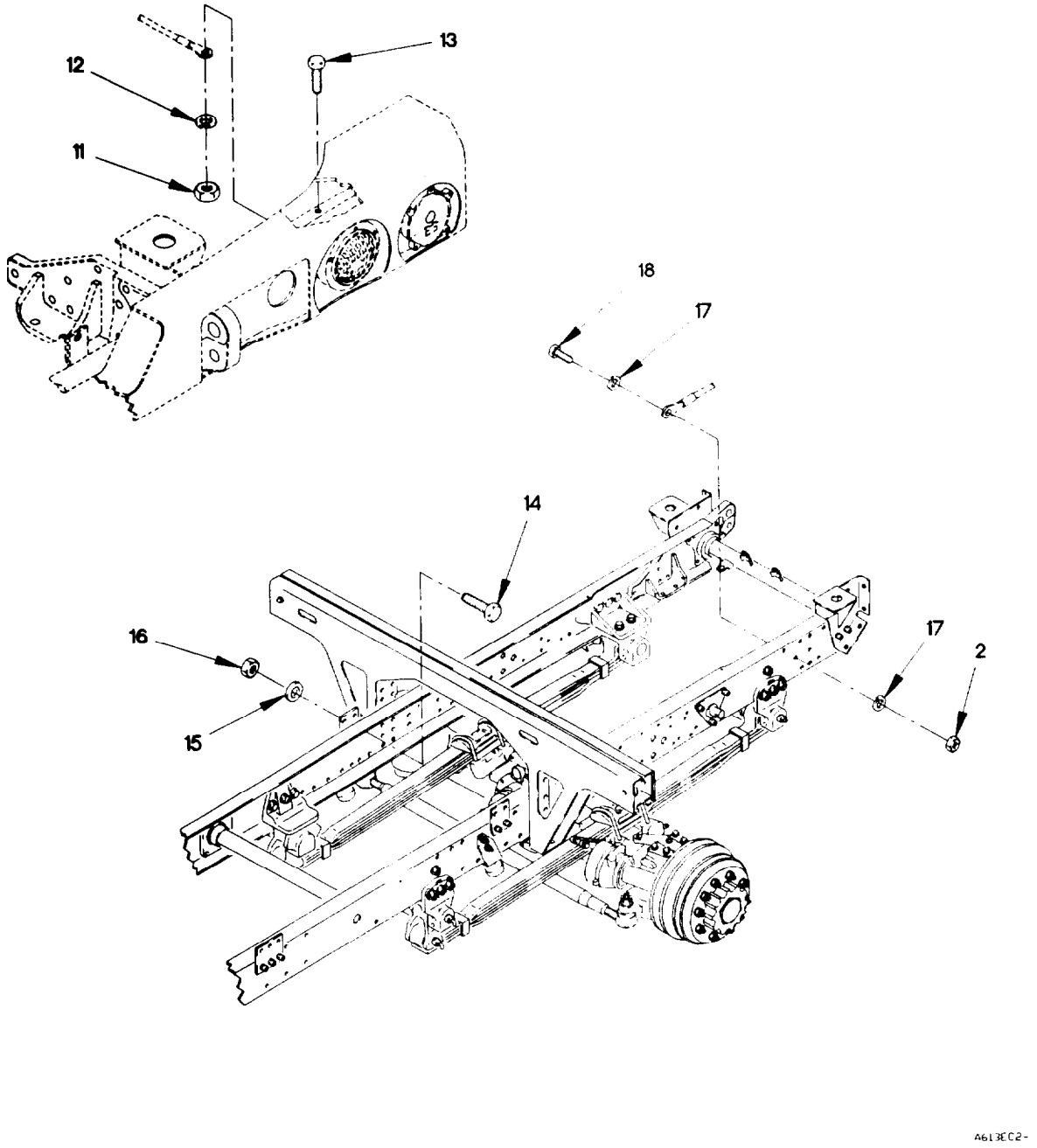

Figure 102. Starter to Chassis Ground Cable and Clamps (Sheet 2 of 2)

(1) ITEM NO	(2) SMR CODE	(3) FSCM	(4) PART NUMBER	(5) DESCRIPTION AND USABLE ON CODE (UOC)	(6) QTY
				GROUP 0613: HULL OR CHASSIS WIRING HARNESS	
				FIG. 102 STARTER TO CHASSIS GROUND CABLE AND CLAMPS	
1	PAOZZ	45152	2AA855	CLIP, SPECIAL	3
2	PAOZZ	15526	DIN 934 ST M6	NUT, SELF-LOCKING, HE M6 X 1	3
3	PAOZZ	56161	10503805	SCREW, CAP, HEXAGON H M6 X 1 X 20	3
4	PAOZZ	19207	12414308-007	NUT, SELF-LOCKING, EX M12 X 1.5	1
5	PAOZZ	19207	12420352-001	BRACKET, ANGLE	1
6	PAOZZ	18076	S630H-24	CLAMP, LOOP, HVY DUTY	1
7	PAOZZ	19207	12414307-078	BOLT, MACHINE M12 X 1.5 X 35	3
8	PAOZZ	19207	12414308-021	NUT, SELF-LOCKING, EX M12 X 1.5	2
9	PAOZZ	0B832	1946	STRIP, ELECTRICAL GR	3
10	PAOZZ	96906	MS35335-38	WASHER, LOCK 9/16	3
11	PAOZZ	19207	12414308-017	NUT, SELF-LOCKING, EX M8 X 1	1
12	PAOZZ	19207	12414570-021	WASHER, LOCK M10.5	1
13	PAOZZ	19207	12417958-016	BOLT, MACHINE M8 X 1 X 80	1
14	PAOZZ	56161	10503770	SCREW, CAP, HEXAGON H M6 X 1 X 30	1
15	PAOZZ	19200	12524631-1	WASHER, FLAT M6	1
16	PAOZZ	19207	12414315-002	NUT, PLAIN, HEXAGON M4 X .7	1
17	PAOZZ	19207	12414570-015	WASHER, LOCK M6.4	2
18	PAOZZ	19207	12414419-080	SCREW, CAP, HEXAGON H M6 X 1 X 40	1

END OF FIGURE

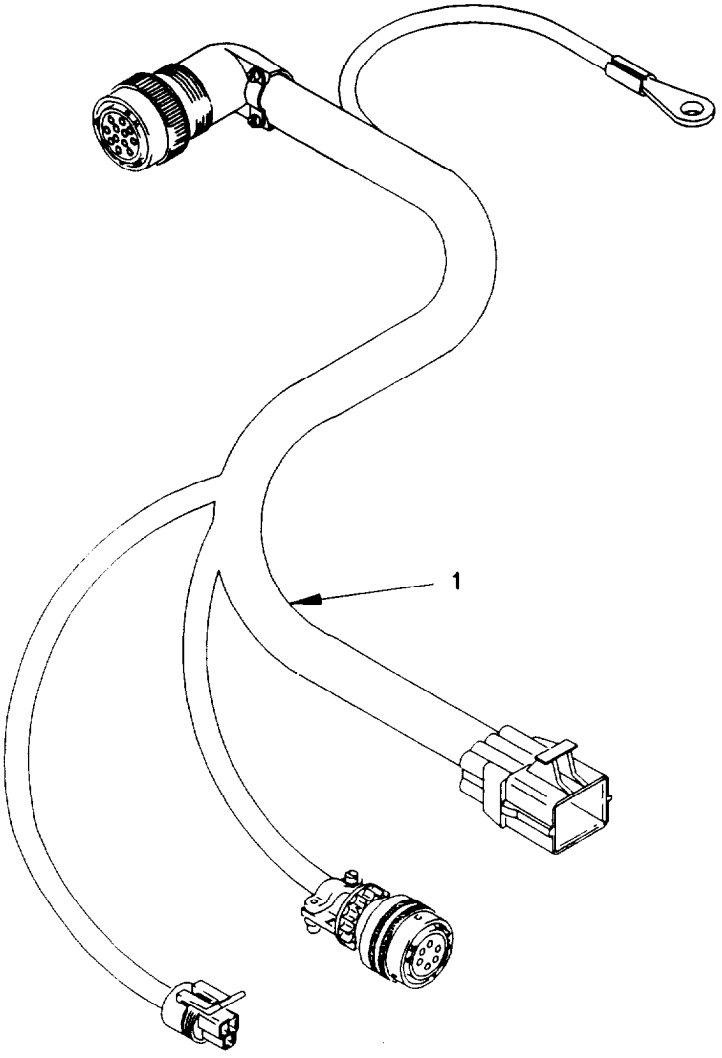

0613AP1-

Figure 103. CTIS Cable Assembly

(1) ITEM NO	(2) SMR CODE	(3) FSCM	(4) PART NUMBER	(5) DESCRIPTION AND USABLE ON CODE (UOC)	(6) QTY
				GROUP 0613: HULL OR CHASSIS WIRING HARNESS	
				FIG. 103 CTIS CABLE ASSEMBLY	
1	PAOZZ	19207	12378685-001	WIRING HARNESS, BRAN	1
				END OF FIGURE	

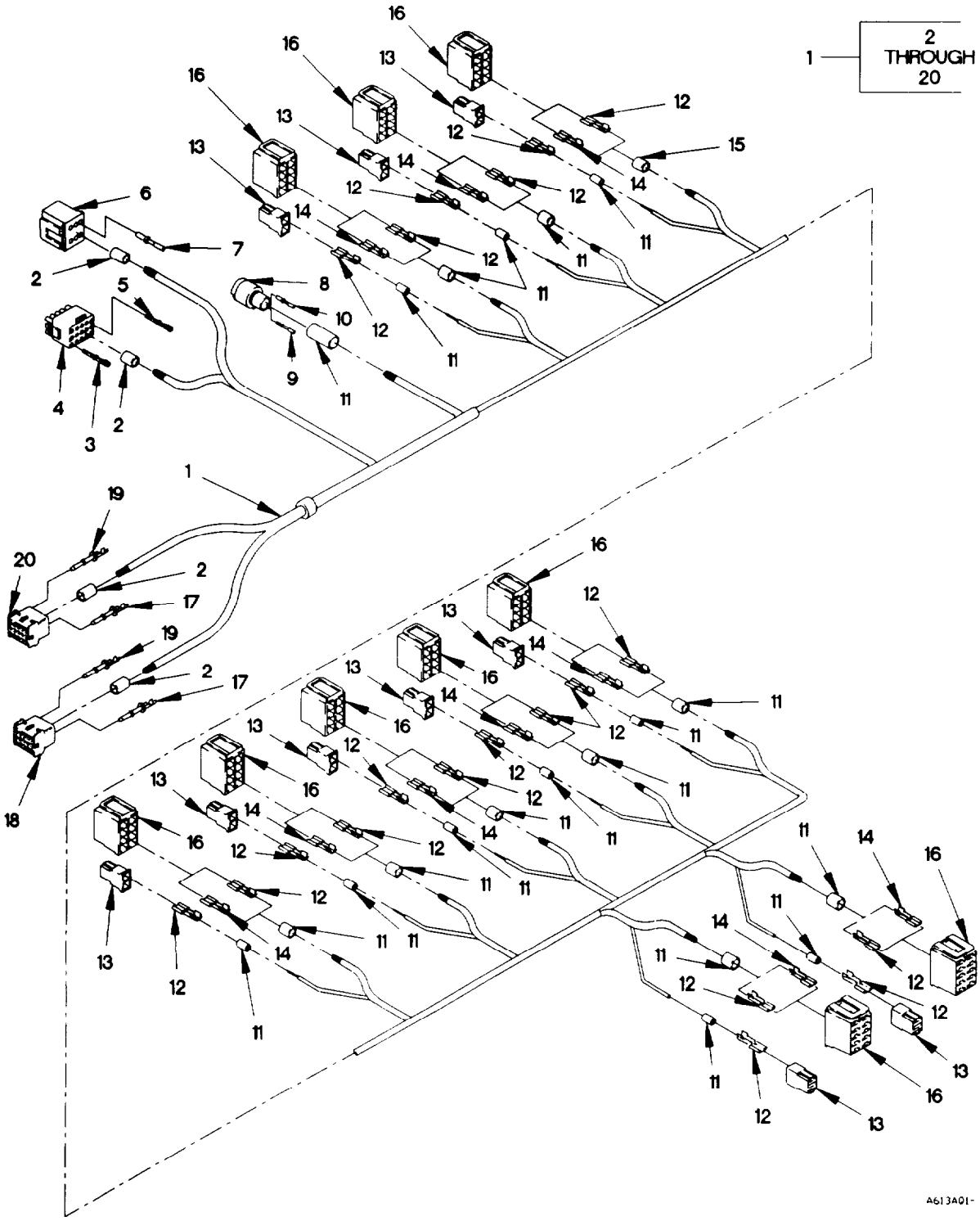

Figure 104. Auxillary Panel Cable Assembly

(1) ITEM NO	(2) SMR CODE	(3) FSCM	(4) PART NUMBER	(5) DESCRIPTION AND USABLE ON CODE (UOC)	(6) QTY
				GROUP 0613: HULL OR CHASSIS WIRING HARNESS	
				FIG. 104 AUXILLARY PANEL CABLE ASSEMBLY	
1	PAOOO	0FW39	12420887	WIRING HARNESS, BRAN	1
				UOC: LAD, LWB, LWC, LWD,	
2	PAOZZ	81349	M43436/1-3	.BAND, MARKER	4
3	PAOZZ	00779	350550-6	.CONTACT, ELECTRICAL	11
4	PAOZZ	58536	A-A-55464-07	.CONNECTOR BODY, PLUG	1
5	PAOZZ	00779	350923-6	.TERMINAL, LUG	3
6	PAOZZ	03956	1805607-40	.CONNECTOR BODY, RECE	1
7	PAOZZ	19207	12420915-003	.CONTACT, ELECTRICAL	15
8	PAOZZ	19207	12258940-4	.CONNECTOR, PLUG, ELEC	1
9	PAOZZ	71468	110238-0195	.PIN, GROOVED, HEADLES	2
10	PAOZZ	11083	7N7779	.CONTACT, ELECTRICAL	2
11	PAOZZ	81349	M43436/1-1	.BAND, MARKER	20
12	PAOZZ	00779	60253-2	.TERMINAL, QUICK DISC	19
13	PAOZZ	82484	913 328	.CONNECTOR BODY, RECE	10
14	PAOZZ	00779	41274	.TERMINAL, QUICK DISC	10
15	PAOZZ	81349	M43436/1-2	.BAND, MARKER	1
16	PAOZZ	82484	596289	.CONNECTOR BODY, RECE	10
17	PAOZZ	09922	SM16M-1TK6	.CONTACT, ELECTRICAL	15
18	PAOZZ	09922	SMS18P-1	.CONNECTOR BODY, RECE	1
19	PAOZZ	09922	SM14M-1TK6	.CONTACT, ELECTRICAL	10
20	PAOZZ	09922	SMS24P-1	.CONNECTOR BODY, RECE	1

END OF FIGURE

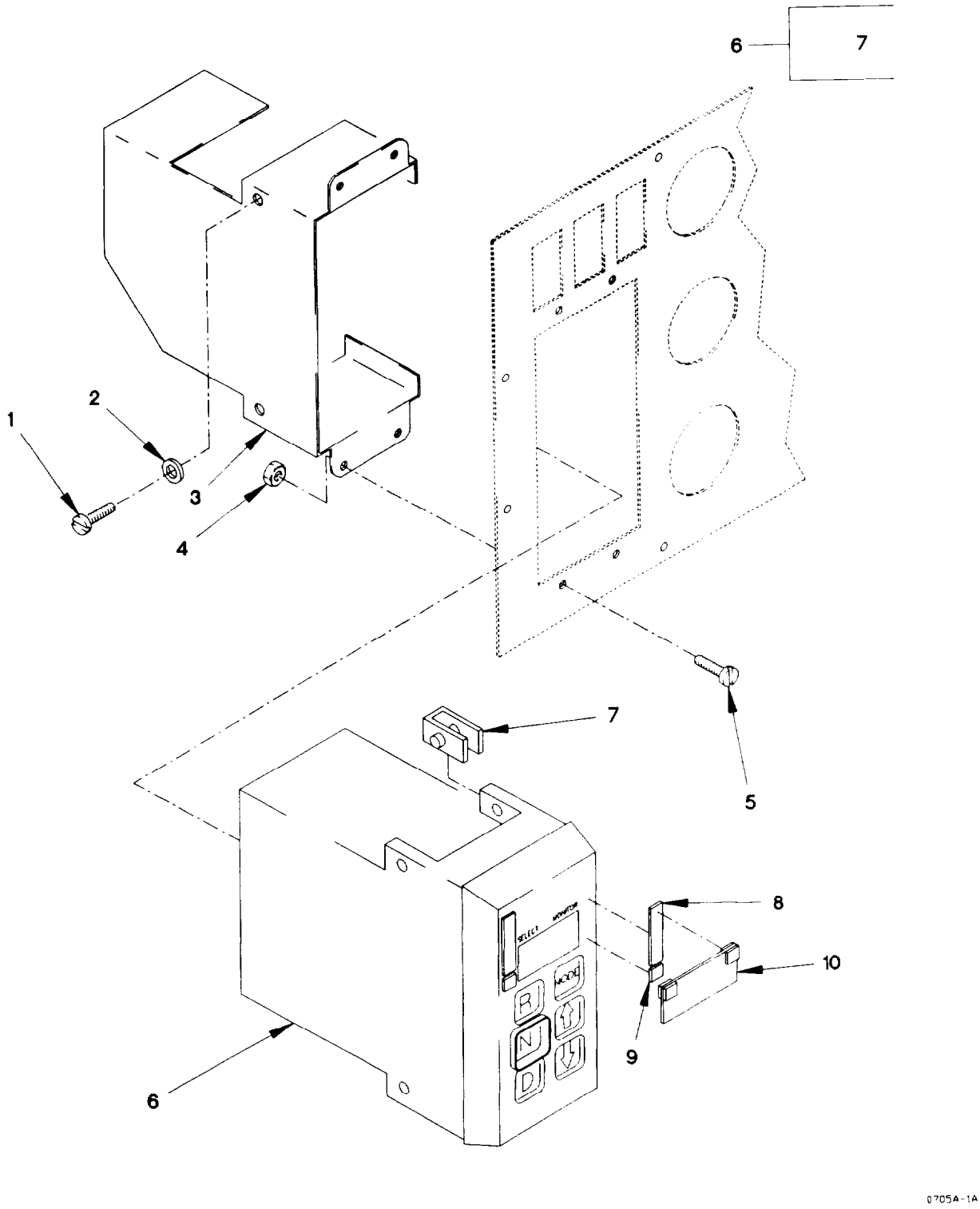

Figure 105. WTECII Transmission Electronic Control Unit

(1) ITEM NO	(2) SMR CODE	(3) FSCM	(4) PART NUMBER	(5) DESCRIPTION AND USABLE ON CODE (UOC)		(6) QTY
				GORUP 0705: TRANSMISSION SHIFTING COMPONENTS		
				FIG. 105 WTEC II TRANSMISSION ELECTRONIC CONTROL UNIT		
1	PAOZZ	56161	10503805	SCREW, CAP, HEXAGON H M6 X 1 X 20		2
2	PAOZZ	19207	12417975-006	SPACER, RING 6.4MM ID X 18		2
3	PFOZZ	19207	12414714	BRACKET, MOUNTING		1
4	PAOZZ	84256	ALS3-470-3.3	NUT, PLAIN, KNURLED M4X.70 (GRIP RANGE 2.0 - 3.30)		4
5	PAOZZ	19207	12414419-042	SCREW, MACHINE M4 X .7 X 16		4
6	PAOZZ	73342	29519627	CONTROL ASSEEMBLY, TR TRANSMISSION ECU/SHIFTER		1
7	PAOZZ	73342	29511130	.FASTENER, POSITIVE L 6MM X 1		4
8	MOOZZ	19207	12421437-001X	FASTENER, TAPE MAKE FROM FASTENER TAPE P/N MIL-F-21840 (81349), CUT TO LENGTH	V	
9	MOOZZ	19207	12421437-002X	FASTENER, TAPE MAKE FROM FASTENER TAPE P/N 50-534718-19 (70898), CUT TO LENGTH	V	
10	PAOZZ	19207	12421435	FILTER ASSEMBLY, SIG		1
				END OF FIGURE		

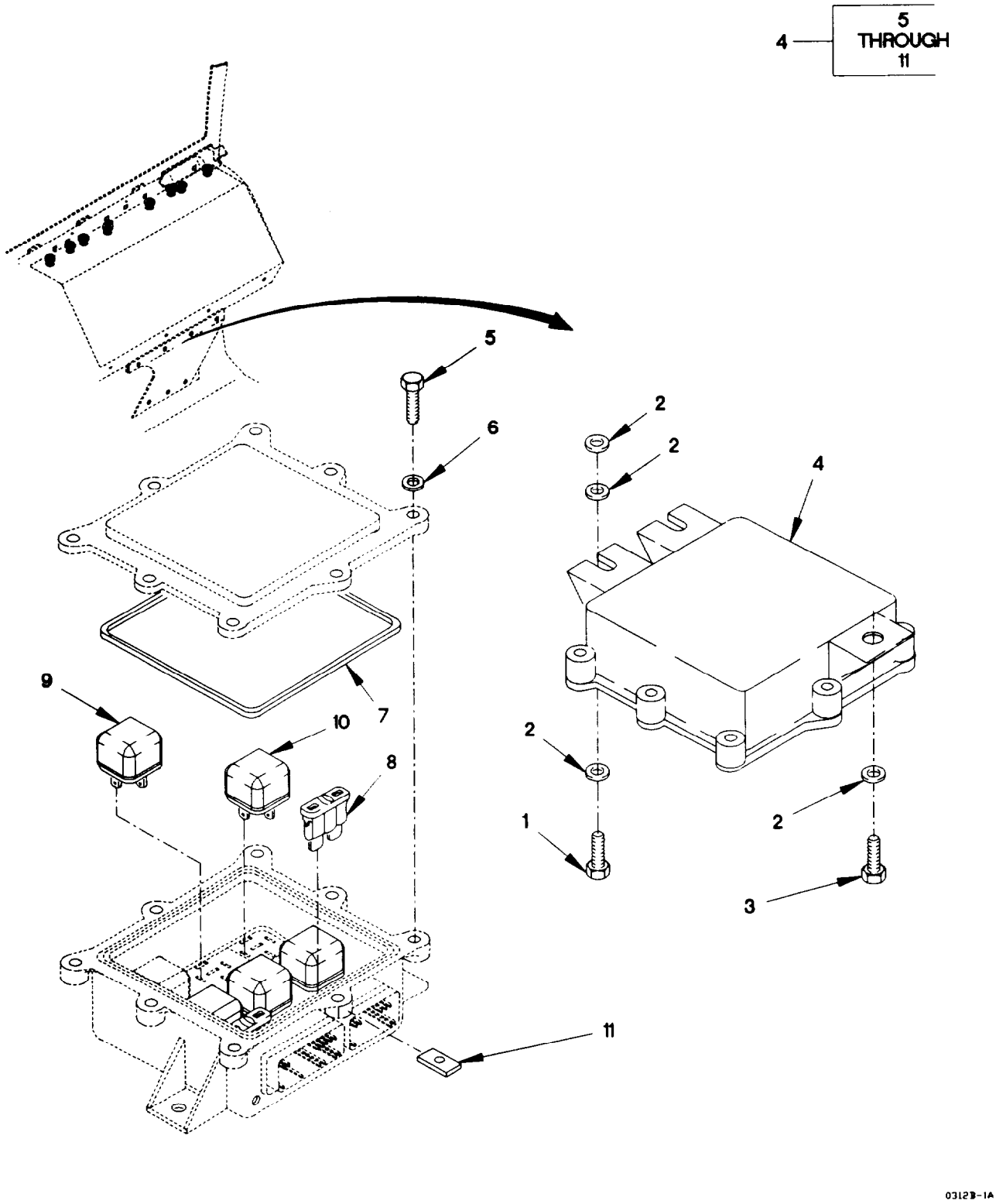

Figure 106. WTECII Vehicle Interface Module

(1) ITEM NO	(2) SMR CODE	(3) FSCM	(4) PART NUMBER	(5) DESCRIPTION AND USABLE ON CODE (UOC)	(6) QTY
				GROUP 0705: TRANSMISSION SHIFTING COMPONENTS	
				FIG. 106 WTEC II VEHICLE INTERFACE MODULE	
1	PAOZZ	56161	10503805	SCREW, CAP, HEXAGON H M6 X 1 X 20	2
2	PAOZZ	19200	12524631-1	WASHER, FLAT M6	5
3	PAOZZ	15526	DIN933-M6X16-8.8 -A4C	SCREW, CAP, HEXAGON H M6 X 1 X 16	1
4	PAOOO	73342	29509889	REGULATOR, VOLTAGE	1
5	PAOZZ	56161	10504005	.SCREW, CAP, HEXAGON H M5 X .8 X 16	8
6	PAOZZ	73342	29506165	.WASHER, FLAT	8
7	PAOZZ	73342	29505809	.SEAL RING, METAL	1
8	PAOZZ	11862	12004007	.FUSE, INCLOSED LINK	2
9	PAOZZ	73342	29505936	.RELAY ASSEMBLY 24V (K1,K4,K5)	4
10	PAOZZ	73342	29505935	.RELAY, ELECTROMAGNET 12V (K3, K6)	2
11	PAOZZ	73342	29506511	.NUT, PLAIN, PLATE	1
				END OF FIGURE	

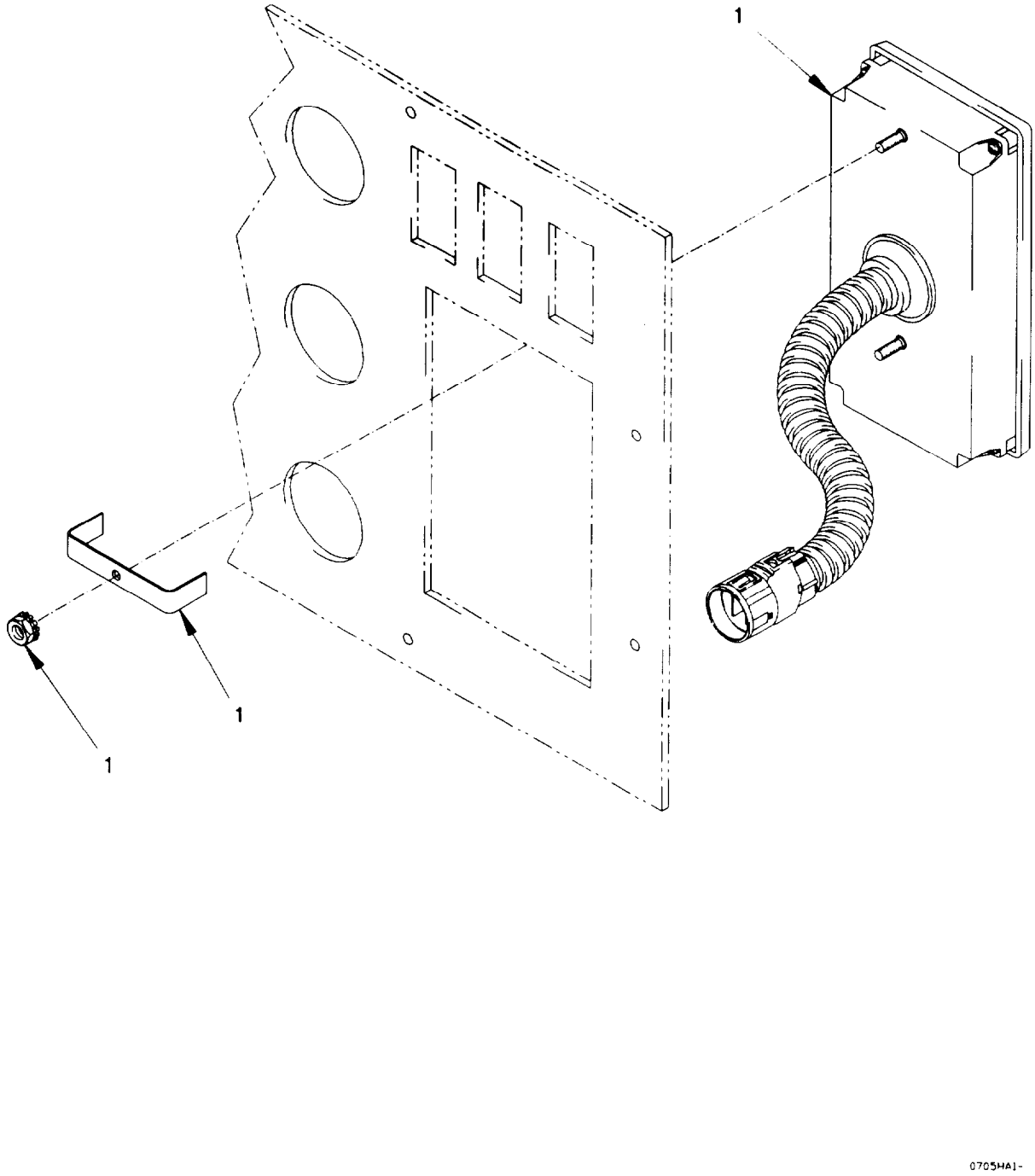

Figure 107. WTEC III Transmission Gear Selector

(1) ITEM NO	(2) SMR CODE	(3) FSCM	(4) PART NUMBER	(5) DESCRIPTION AND USABLE ON CODE (UOC)	(6) QTY
				GROUP 0705: TRANSMISSION SHIFTING COMPONENTS FIG. 107 WTEC III TRANSMISSION GEAR SELECTOR	
1	PAOZZ	0FW39	12421786	GEAR, SELECTOR, TRANSMISSION	1
				END OF FIGURE	

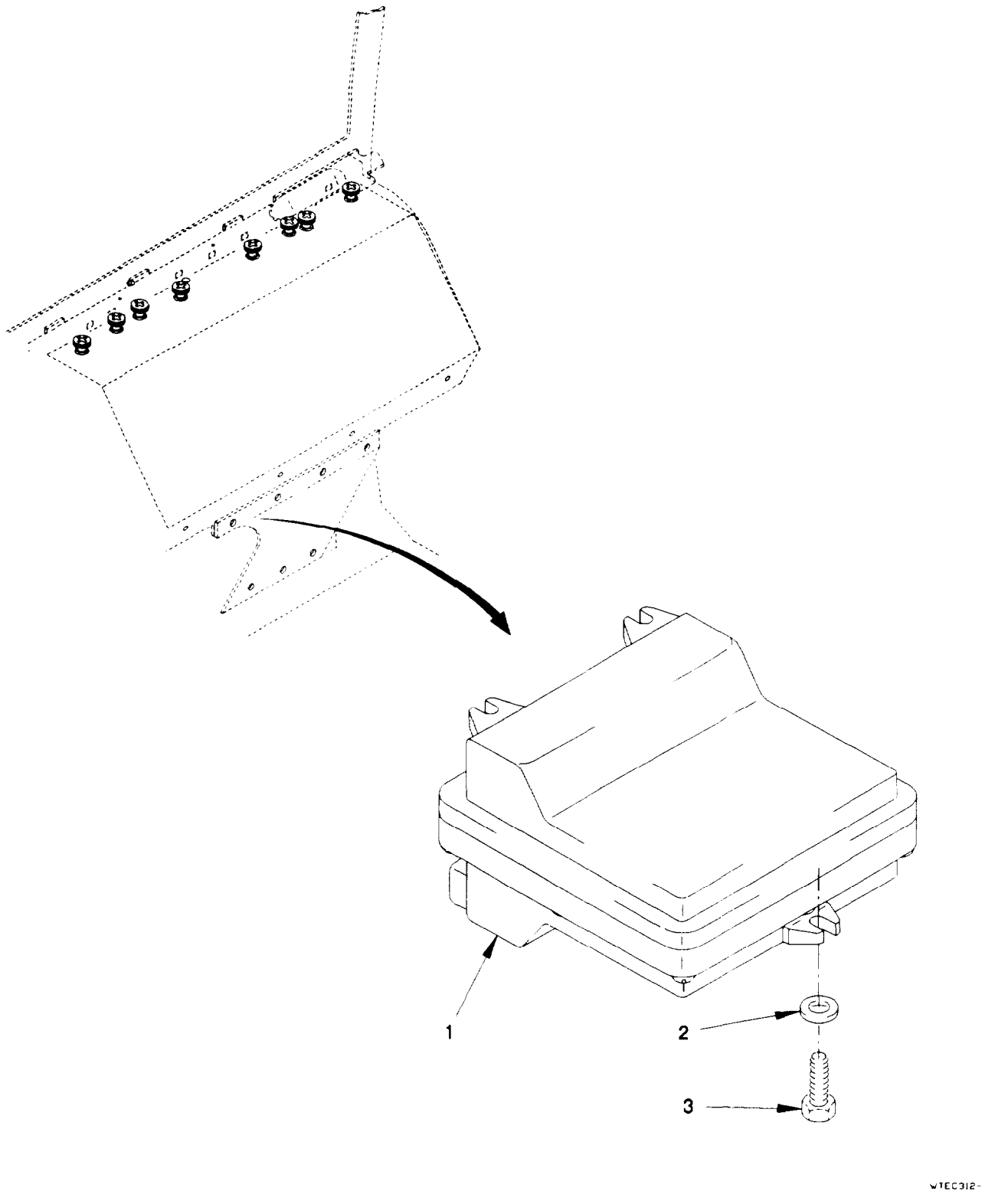

Figure 108. WTEC III Transmission Electronic Control Unit

(1) ITEM NO	(2) SMR CODE	(3) FSCM	(4) PART NUMBER	(5) DESCRIPTION AND USABLE ON CODE (UOC)	(6) QTY
				GROUP 0705: TRANSMISSION SHIFTING COMPONENTS	
				FIG. 108 WTEC III TRANSMISSION ELECTRONIC CONTROL UNIT	
1	PAOZZ	0FW39	12421787	ELECTRONIC CONTROL UNIT, WTEC III	1
2	PAOZZ	19207	12414473-011	WASHER, FLAT	6
3	PAOZZ	56161	10503805	SCREW, CAP, HEXAGON H M6 X 1 X 20	3
				END OF FIGURE	

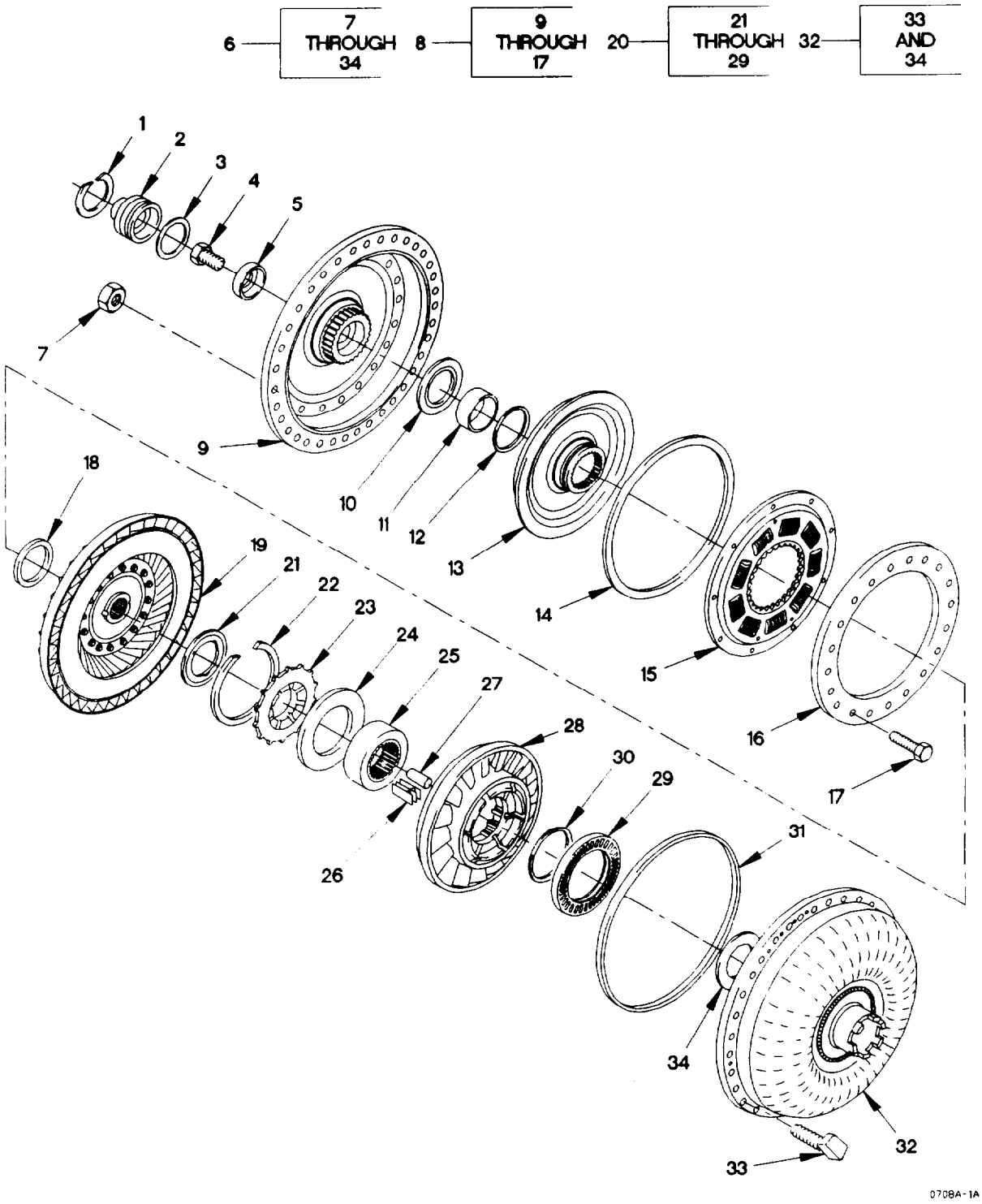

Figure 109. Torque Converter Module

(1) ITEM NO	(2) SMR CODE	(3) FSCM	(4) PART NUMBER	(5) DESCRIPTION AND USABLE ON CODE (UOC)	(6) QTY
				GROUP 0708: TORQUE CONVERTER OR FLUID COUPLING	
				FIG. 109 TORQUE CONVERTER MODULE	
1	PAFZZ	73342	29503209	RING, RETAINING	1
2	PAFZZ	73342	29503207	COVER, ACCESS	1
3	PAFZZ	73342	29503208	RETAINER, PACKING 45.82 DI	1
4	PAFZZ	75755	19M8029	SCREW, CAP, HEXAGON H M16 X 2 X 30	1
5	PAFZZ	73342	29505681	SHIM 4.203 THK	1
5	PAFZZ	73342	29505682	SHIM 4.381 THK	1
5	PAFZZ	73342	29505683	SHIM 4.559 THK	1
5	PAFZZ	73342	29505684	SHIM 4.736 THK	1
5	PAFZZ	73342	29505685	SHIM	1
5	PAFZZ	73342	29505686	SHIM 5.092 THK	1
5	PAFZZ	73342	29505688	SHIM 4.0 THK	1
6	AFFFF	73342	29503986	TORQUE CONV MODULE	1
7	PAFZZ	73342	23049381	.NUT, PLAIN, HEXAGON	36
8	AFFFF	73342	29503194	.COVER ASSY, CONV	1
9	PAFZZ	73342	29503195	. .HOUSING, HYDRAULIC, G USED ON TRANSMISSION SERIAL NUMBERS PRIOR TO 6510024410	1
9	PAFZZ	73342	29514803	. .HOUSING, HYDRAULIC, G USED ON TRANSMISSION SERIAL # 6510024410 AND SUBSEQUENT	1
10	PAFZZ	73342	23046228	. .WASHER, SEAL	1
11	PAFZZ	73342	29503196	. .BUSHING, SLEEVE	1
12	PAFZZ	73342	29503197	. .WASHER, SEAL	1
13	PAFZZ	73342	29500939	. .SHAFT, AND CLUTCH HA	1
14	PAFZZ	73342	23046868	. .SEAL, METALLIC, SPECI	1
15	PAFZZ	73342	23046236	. .DISK, CLUTCH	1
16	PAFZZ	73342	29500655	. .BACKING PLATE, LOCKU USED ON TRANSMISSION SERIAL NUMBERS PRIOR TO 6510024410	1
16	PAFZZ	73342	29514804	. .BACKING PLATE, LOCKU	1
17	PAFZZ	73342	29500667	. .SCREW, CAP, HEXAGON M8 X 1.25 USED ON TRANSMISSION SERIAL NUMBERS PRIOR TO 6510024410	20
17	PAFZZ	73342	29514805	. .SCREW, CAP, HEXAGON H (USED ON TRANSMISSION SERIAL NUMBER 6510024410 AND SUBSEQUENT	30
18	PAFZZ	73342	29500025	.WASHER, SEAL	1
19	PAFZZ	73342	29503979	.TURBINE ASSEMBLY, TO	1
20	AFFFF	73342	29503983	.STATOR ASSY	1
21	PAFZZ	73342	29500768	. .BEARING, WASHER, THRU	1
22	PAFZZ	73342	29503239	. .RING, RETAINING	1
23	PAFZZ	73342	29503980	. .PLATE ASSEMBLY, THRU	1
24	PAFZZ	73342	29500066	. .WASHER, SEAL	1
25	PAFZZ	73342	29500068	. .BEARING, SLEEVE	1

(1) ITEM NO	(2) SMR CODE	(3) FSCM	(4) PART NUMBER	(5) DESCRIPTION AND USABLE ON CODE (UOC)	(6) QTY
26	PAFZZ	73342	29500064	. .SPRING, FLAT	13
27	PAFZZ	73342	29500063	. .ROLLER, BEARING	13
28	PAFZZ	73342	29503633	. .CLUTCH, POSITIVE	1
29	PAFZZ	73342	23045918	. .BEARING, ROLLER, THRU	1
30	PAFZZ	73342	29502275	.SHIM 0.254 THK	1
30	PAFZZ	73342	29502276	.SHIM 0.4826 THK	1
30	PAFZZ	73342	29502277	.SHIM 0.7112 THK	1
31	PAFZZ	73342	23049377	.RETAINER, PACKING	1
32	PAFFF	73342	29514790	.OIL PUMP ASSEMBLY, E	1
33	PAFZZ	73342	29500616	. .BOLT, TEE HEAD	36
34	PAFZZ	73342	29500908	. .BEARING, WASHER, THRU	1

END OF FIGURE

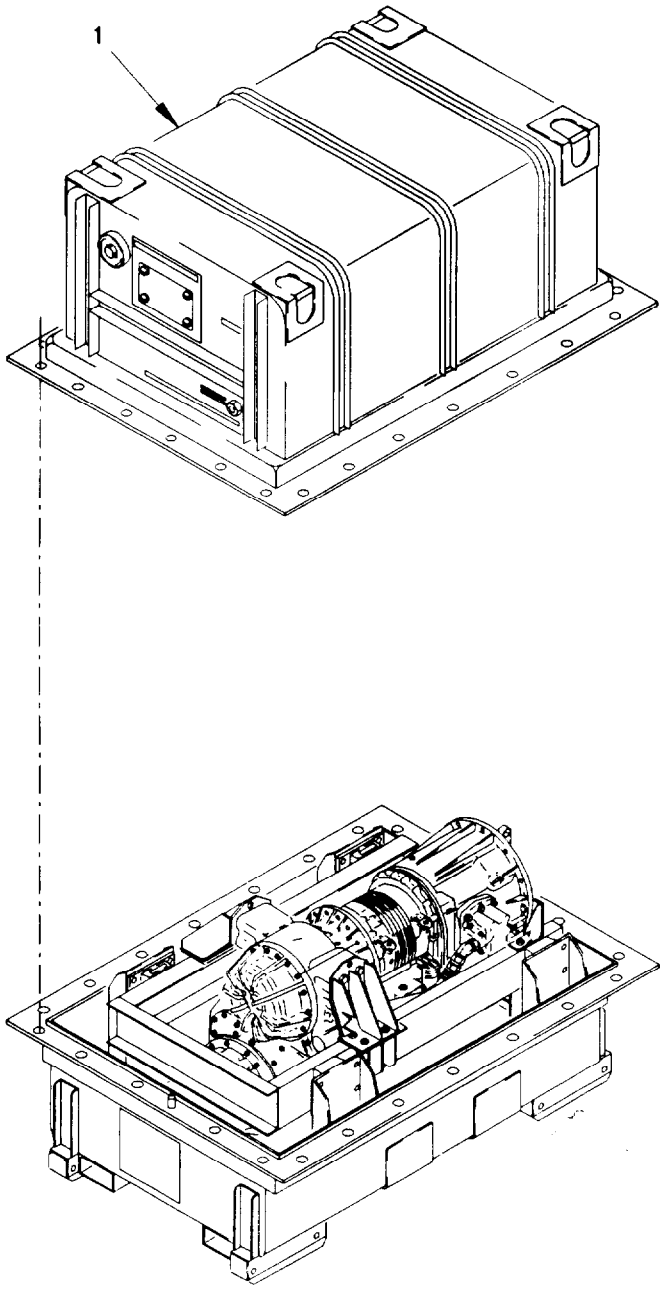

0710A-1A

Figure 110. Transmission With Container

(1) ITEM NO	(2) SMR CODE	(3) FSCM	(4) PART NUMBER	(5) DESCRIPTION AND USABLE ON CODE (UOC)	(6) QTY
				GROUP 0710: TRANSMISSION ASSEMBLY AND ASSOCIATED PARTS	
				FIG. 110 TRANSMISSION WITH CONTAINER	
1	PAFHH	0FW39	12414438-003	TRANSMISSION, HYDRAU	1
				END OF FIGURE	

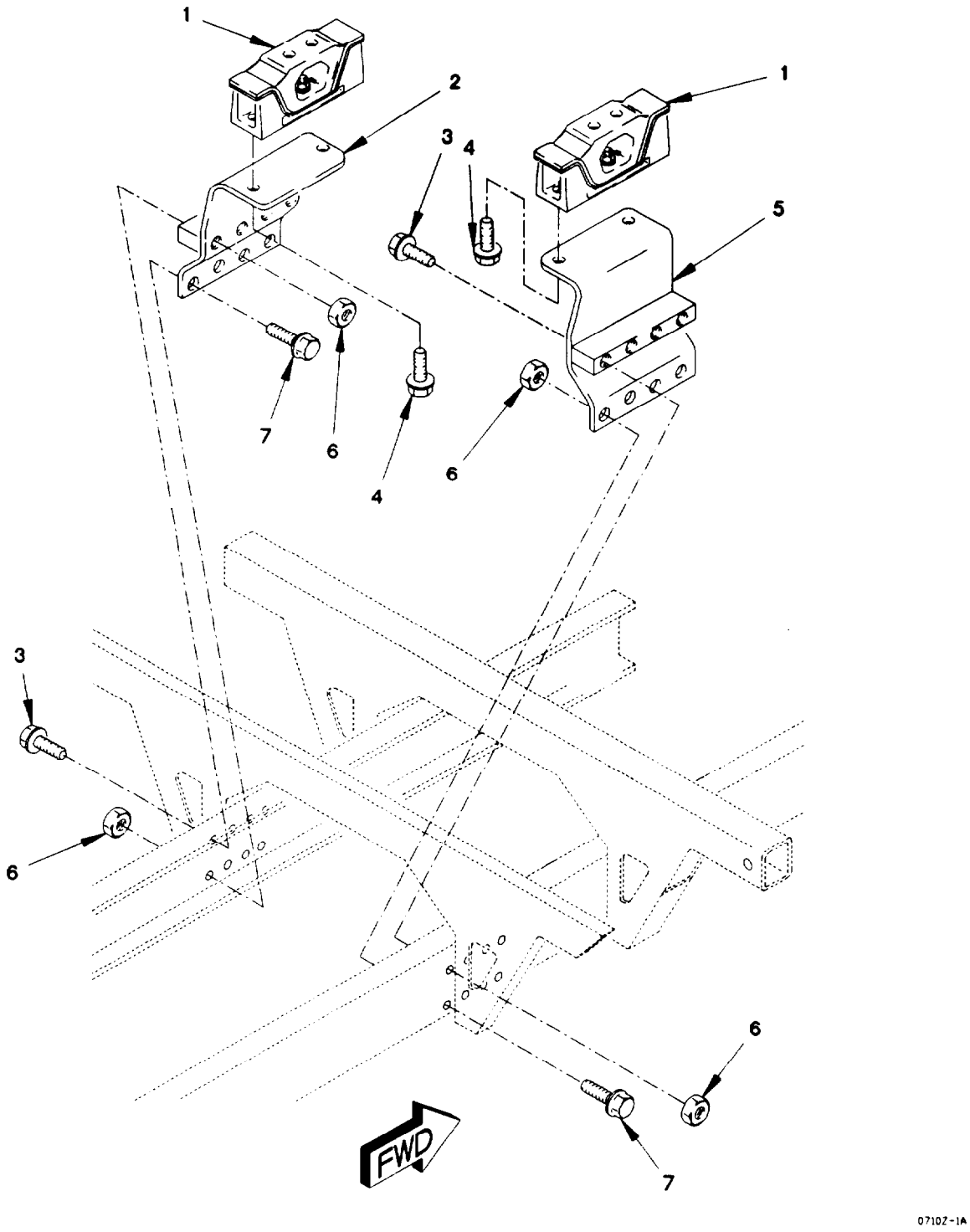

Figure 111. Transmission Mounts

(1) ITEM NO	(2) SMR CODE	(3) FSCM	(4) PART NUMBER	(5) DESCRIPTION AND USABLE ON CODE (UOC)	(6) QTY
				GROUP 0710: TRANSMISSION ASSEMBLY AND ASSOCIATED PARTS	
				FIG. 111 TRANSMISSION MOUNTS	
1	PAFZZ	81860	25923	MOUNT, RESILIENT	2
2	PAFZZ	0FW39	12417615	BRACKET, ENGINE MOUN	1
3	PAFZZ	19207	12414307-149	BOLT, MACHINE M16 X 1.5 X 110	4
4	PAOZZ	19207	12414307-077	SCREW, CAP, HEXAGON H M12 X 1.5 X 30	8
5	PAFZZ	0FW39	12417614	BRACKET, ENGINE MOUN	1
6	PAFZZ	19207	12414308-025	NUT, SELF-LOCKING, EX M16 X 1.5	8
7	PAFZZ	19207	12414307-141	BOLT, MACHINE M16 X 1.5 X 50	4
				END OF FIGURE	

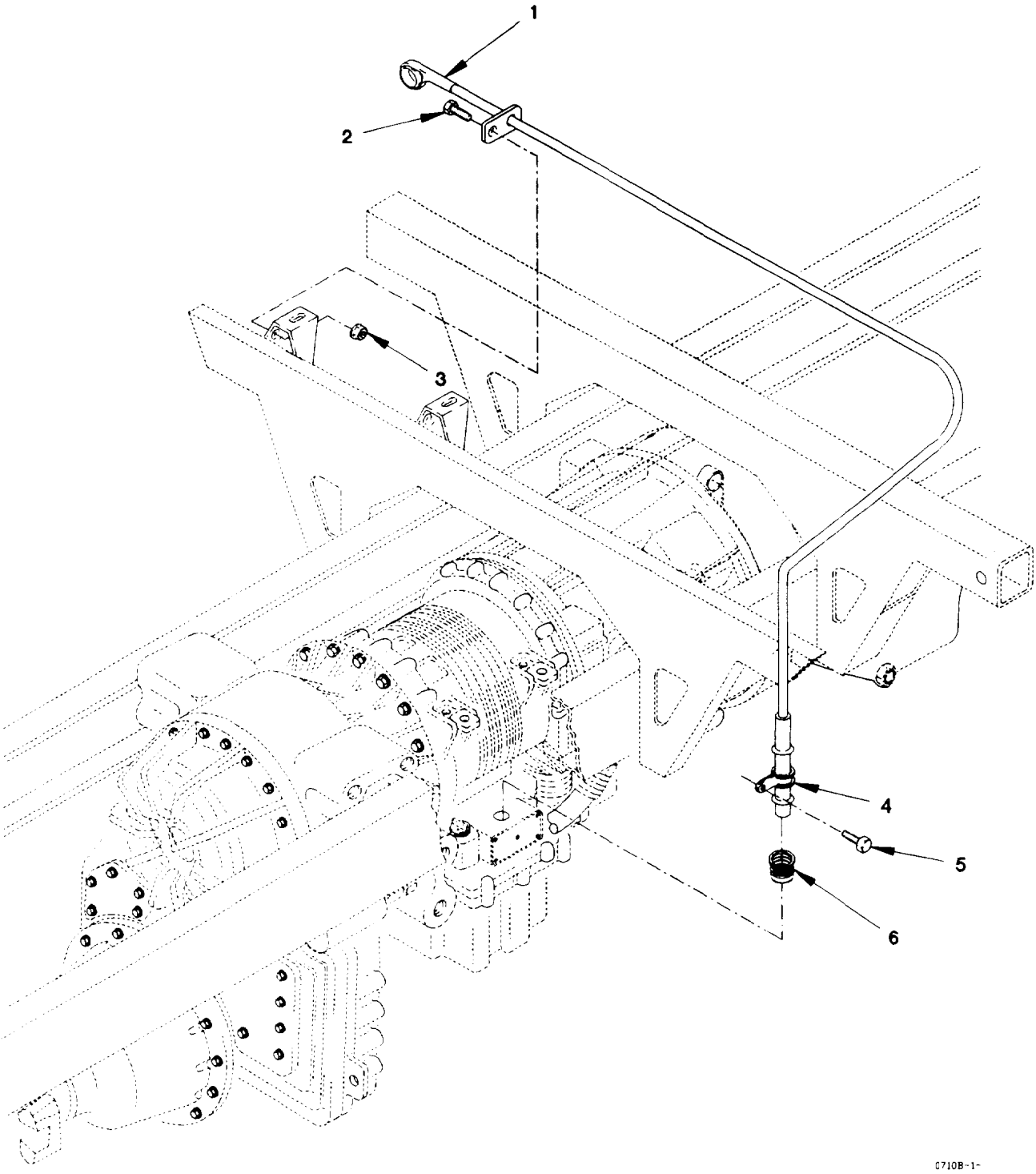

Figure 112. Transmission Dipstick

(1) ITEM NO	(2) SMR CODE	(3) FSCM	(4) PART NUMBER	(5) DESCRIPTION AND USABLE ON CODE (UOC)	(6) QTY
				GROUP 0710: TRANSMISSION ASSEMBLY AND ASSOCIATED PARTS	
				FIG. 112 TRANSMISSION DIPSTICK	
1	PAOZZ	01943	91620-A	GAGE ROD, LIQUID LEV	1
2	PAOZZ	81495	071 408-32	BOLT, MACHINE M8 X 1.25 X 25	1
3	PAOZZ	19207	12414315-006	NUT, SELF-LOCKING, HE M8 X 1.25	1
4	PAOZZ	73342	29507755	BAND, RETAINING PART OF KIT P.N 29513126	1
5	PAOZZ	73342	29519212	SCREW, TAPPING	2
6	PAOZZ	73342	29507823	SEAL, NONMETALLIC RO PROVIDED WITH TRANSMISSION)	1
				END OF FIGURE	

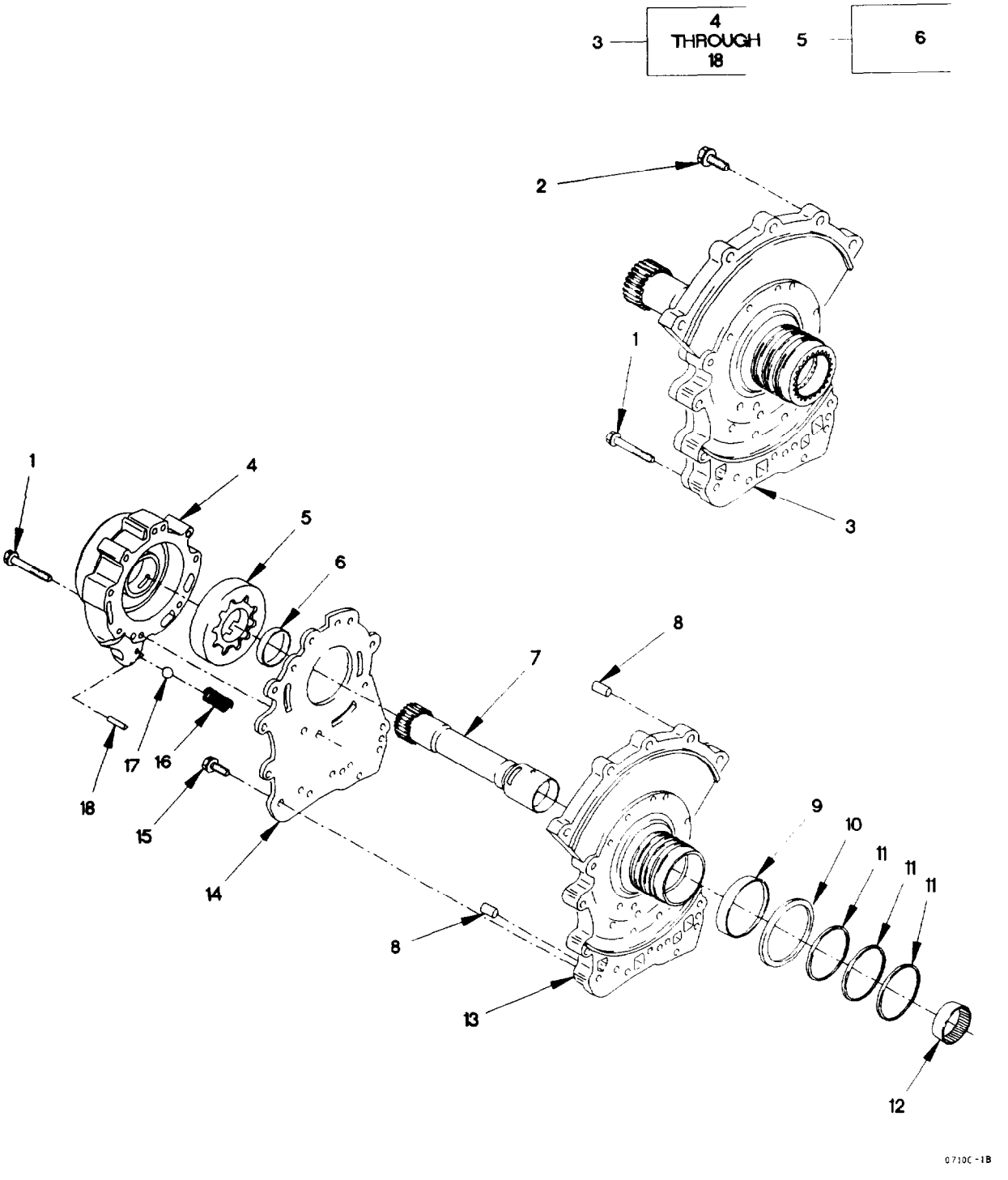

Figure 113. Front Support Assembly

(1) ITEM NO	(2) SMR CODE	(3) FSCM	(4) PART NUMBER	(5) DESCRIPTION AND USABLE ON CODE (UOC)	(6) QTY
				GROUP 0710: TRANSMISSION ASSEMBLY AND ASSOCIATED PARTS	
				FIG. 113 FRONT SUPPORT ASSEMBLY	
1	PAHZZ	73342	11505242	SCREW, CAP, HEXAGON H M8 X 1.25 X 25	14
2	PAHZZ	11862	12337902	SCREW, CAP, HEXAGON H M10 X 1.5 X 35	5
3	AHHHH	73342	29503297	MODULE, FRONT SPRT	1
4	PAHZZ	73342	29502322	.HOUSING, MECHANICAL USED ON TRANSMISSION SERIAL NUMBERS PRIOR TO 6510024410	1
4	PAHZZ	73342	29514801	.HOUSING, MECHANICAL USED ON TRANSMISSION SERIAL NUMBERS 6510024410 AND SUBSEQUENT	1
5	PAHZZ	73342	23049376	.GEAR ROTOR SET, ROTA USED ON TRANSMISSION SERIAL NUMBERS PRIOR TO 6510024410	1
5	PAHZZ	73342	29523725	.GEAR ROTOR SET, ROTA USED ON TRANSMISSION SERIAL NUMBERS 6510024410 AND SUBSEQUENT	1
6	PAHZZ	73342	6881926	. .BUSHING, SLEEVE USED ON TRANSMISSION SERIAL NUMBERS PRIOR TO 6510024410	1
6	PAHZZ	73342	29514538	. .BUSHING, SLEEVE USED ON TRANSMISSION SERIAL NUMBERS 6510024410 AND SUBSEQUENT	1
7	PAHZZ	73342	29502030	.SLEEVE, SHAFT, PUMP USED ON TRANSMISSION SERIAL NUMBERS PRIOR TO 6510024410	1
7	PAHZZ	73342	29516486	.SLEEVE, TRANSMISSION USED ON TRANSMISSION SERIAL NUMBERS 6510024410 AND SUBSEQUENT	1
8	PAHZZ	73342	29501135	.PIN, STRAIGHT, HEADLE	2
9	PAHZZ	73342	23045812	.SPACER, RING	1
10	PAHZZ	73342	23047834	.BEARING, BALL, THRUST	1
11	PAHZZ	73342	23042433	.GASKET CONSISTS OF (4) 23045819 SEALRINGS	1
12	PAHZZ	73342	23045816	.BEARING, ROLLER, NEED	1
13	PAHZZ	73342	29505904	.BRACKET, EYE, ROTATIN	1
14	PAHZZ	73342	29505905	.PLATE, WEAR, ROTARY P	1
15	PAHZZ	21969	DIN933-M10X25-8.8-B3B	.BOLT, MACHINE M10 X .8 X 20	10
16	PAHZZ	73342	29507709	.SPRING USED ON TRANSMISSION SERIAL NUMBERS 6510024410 AND SUBSEQUENT	1

(1) ITEM NO	(2) SMR CODE	(3) FSCM	(4) PART NUMBER	(5) DESCRIPTION AND USABLE ON CODE (UOC)	(6) QTY
17	PAHZZ	24617	145651	.BALL, BEARING USED ON TRANSMISSION SERIAL NUMBERS 6510024410 AND SUBSEQUENT	1
18	PAHZZ	73342	29516030	.PIN, DOWEL USED ON TRANSMISSION SERIAL NUMBERS 6510024410 AND SUBSEQUENT	1

END OF FIGURE

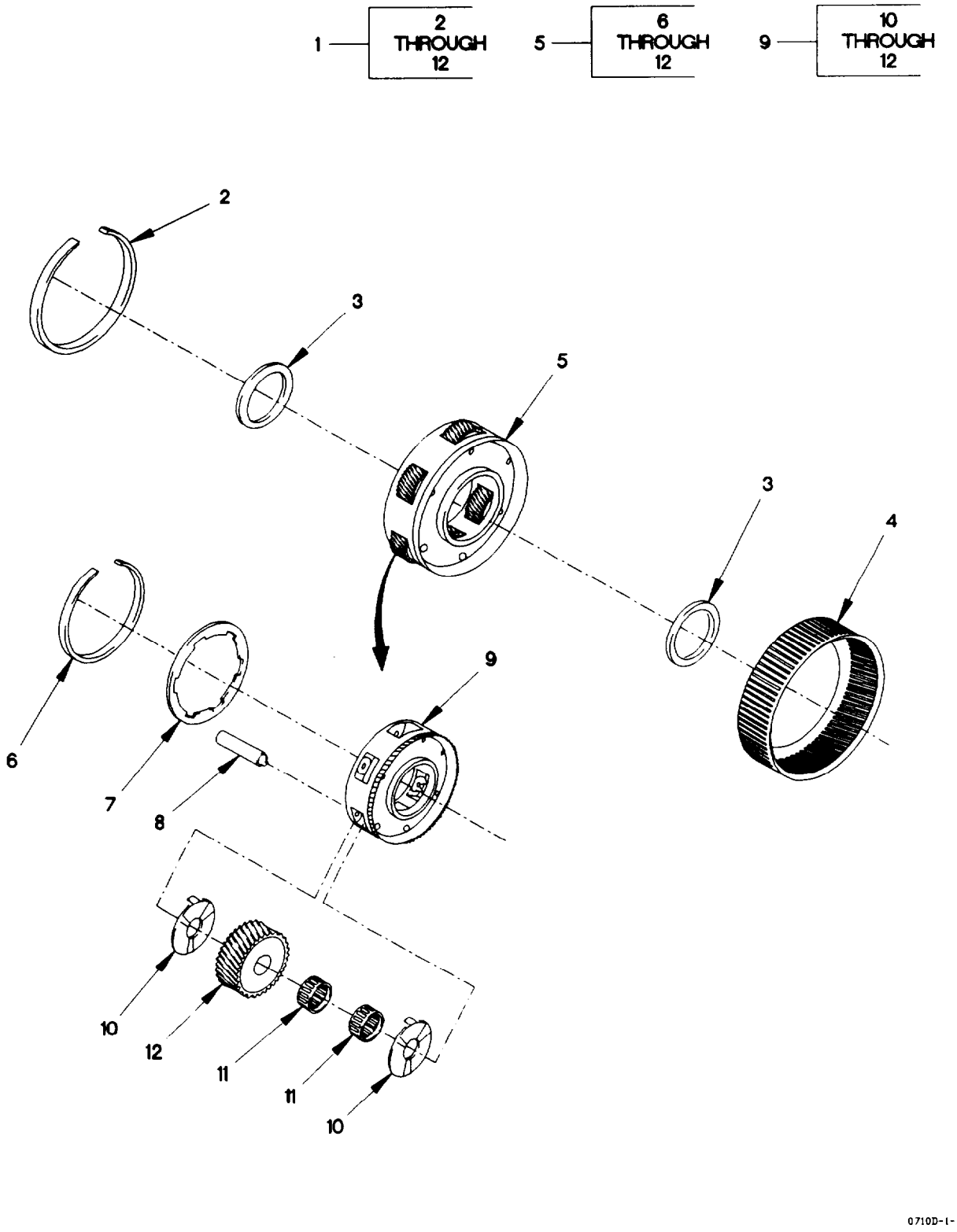

Figure 114. P1 Planetary Carrier

(1) ITEM NO	(2) SMR CODE	(3) FSCM	(4) PART NUMBER	(5) DESCRIPTION AND USABLE ON CODE (UOC)	(6) QTY
				GROUP 0710: TRANSMISSION ASSEMBLY AND ASSOCIATED PARTS	
				FIG. 114 P1 PLANETARY CARRIER	
1	AHHHH	73342	29501568	MODULE, PLNTY GEAR	1
2	PAHZZ	73342	29500699	.RING, RETAINING	1
3	PAHZZ	73342	23047854	.BEARING, WASHER, THRU	2
4	PAHZZ	73342	29503066	.GEAR, INTERNAL	1
5	AHHHH	73342	29501569	.CARRIER ASSY, PLNTY	1
6	PAHZZ	73342	29500689	. .RING, RETAINING	1
7	PAHZZ	73342	29501558	. .PLATE, RETAINING, BEA	1
8	PAHZZ	73342	29501557	. .SPINDLE, MECHANICALL	6
9	PAHZZ	73342	29501570	. .CARRIER, GEAR ASSEMB	1
10	PAHZZ	73342	29502040	. . .BEARING, WASHER, THRU	12
11	PAHZZ	73342	29503397	. . .BEARING, ROLLER, NEED	12
12	PAHZZ	73342	29500573	. . .GEAR SET, HELICAL, MA SET OF SIX 29501461 GEARS	1
				END OF FIGURE	

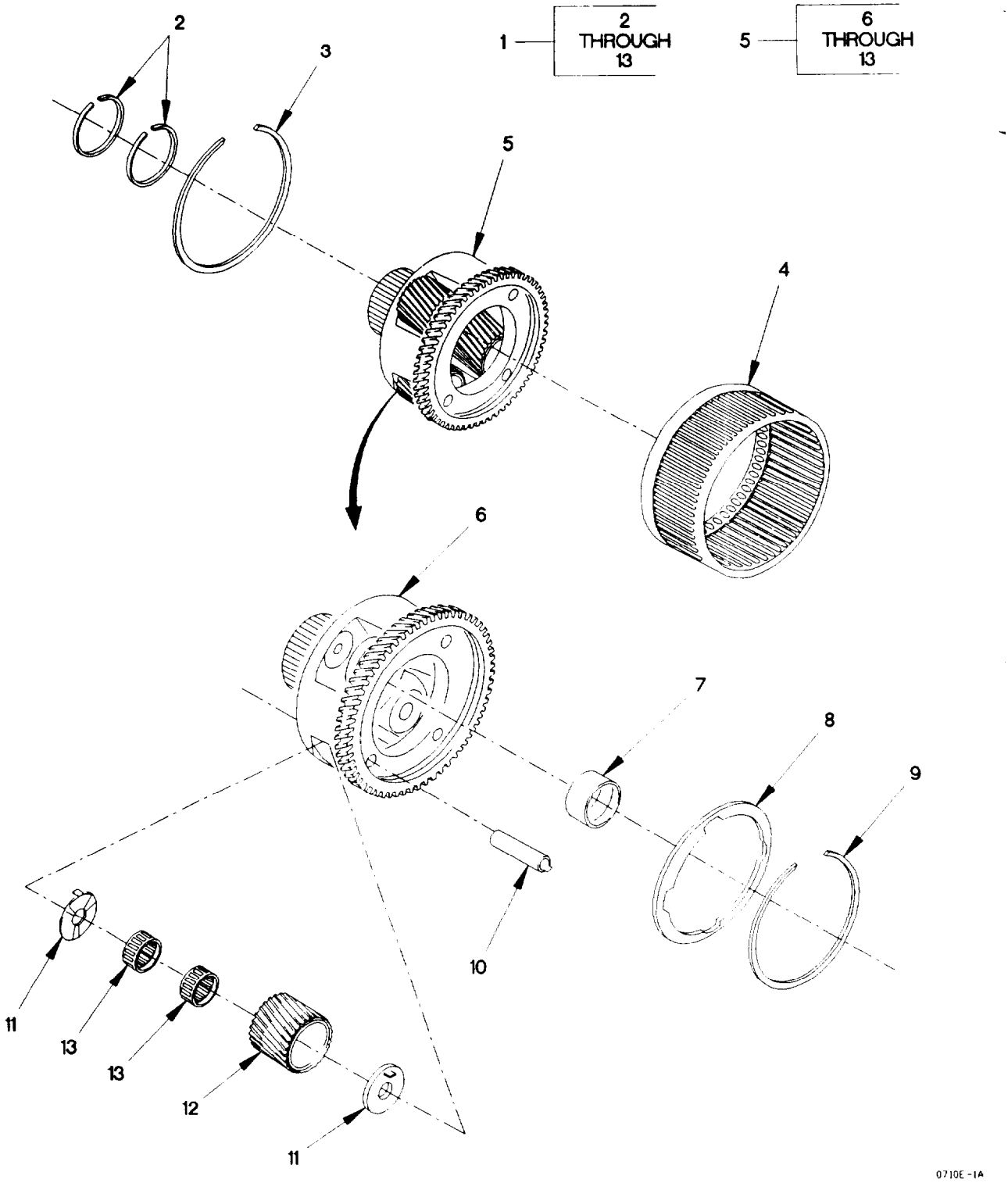

Figure 115. P2 Planetary Carrier

(1) ITEM NO	(2) SMR CODE	(3) FSCM	(4) PART NUMBER	(5) DESCRIPTION AND USABLE ON CODE (UOC)	(6) QTY
				GROUP 0710: TRANSMISSION ASSEMBLY AND ASSOCIATED PARTS	
				FIG. 115 P2 PLANETARY CARRIER	
1	AHHHH	73342	29501551	MODUEL, PLANETARY	1
2	PAHZZ	73342	29503974	.PARTS KIT, SEAL REPL	1
3	PAHZZ	73342	29500699	.RING, RETAINING	1
4	PAHZZ	73342	29503067	.GEAR, INTERNAL	1
5	AHHHH	73342	29501565	.CARRIER ASSY, P2	1
6	PAHZZ	73342	29501544	. .CARRIER, GEAR ASSEMB	1
7	PAHZZ	73342	29501539	. .BUSHING, SLEEVE	1
8	PAHZZ	73342	29501560	. .RING, RETAINING	1
9	PAHZZ	73342	29500689	. .RING, RETAINING	1
10	PAHZZ	73342	29501556	. .SPINDLE, MECHANICALL	4
11	PAHZZ	73342	29502037	. .BEARING, WASHER, THRU	8
12	PAHZZ	73342	29500571	. .GEAR SET, BEVEL, MATC SET OF FOUR GEARS	1
13	PAHZZ	73342	29503398	. .BEARING, ROLLER, THRU	8
				END OF FIGURE	

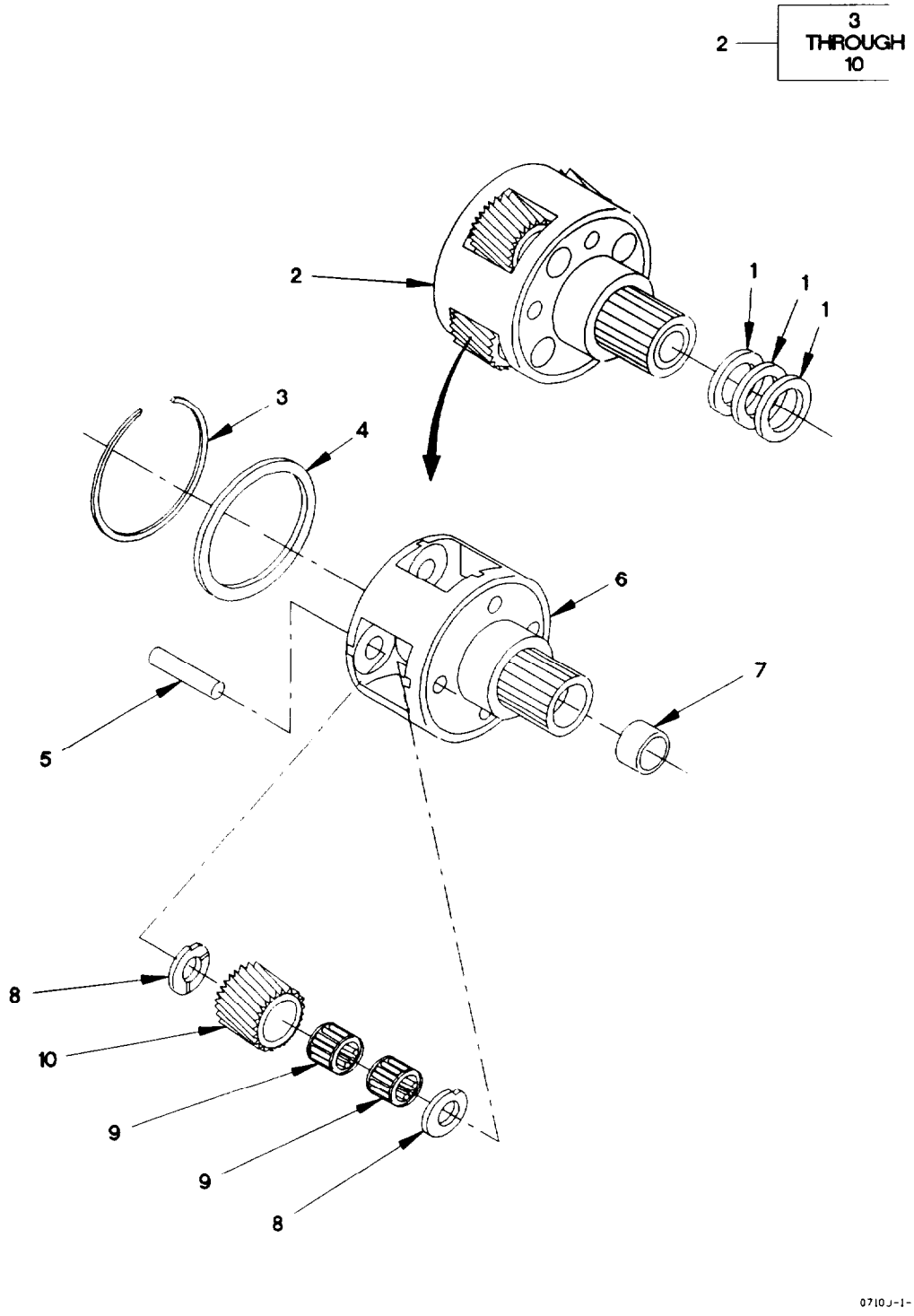

Figure 116. P3 Planetary Carrier

(1) ITEM NO	(2) SMR CODE	(3) FSCM	(4) PART NUMBER	(5) DESCRIPTION AND USABLE ON CODE (UOC)	(6) QTY
				GROUP 0710: TRANSMISSION ASSEMBLY AND ASSOCIATED PARTS	
				FIG. 116 P3 PLANETARY CARRIER	
1	PAHZZ	73342	29503226	SPACER, RING 0.27MM (0.01 IN)	1
1	PAHZZ	73342	29503227	SPACER, RING 0.54MM (0.02 IN)	1
1	PAHZZ	73342	29503228	SPACER, RING 0.81MM (0.03 IN)	1
1	PAHZZ	73342	29503229	SPACER, RING 1.08MM (0.04 IN)	1
1	PAHZZ	73342	29503230	SPACER, RING 1.35MM (0.05 IN)	1
1	PAHZZ	73342	29503231	SPACER, RING 1.62MM (0.06 IN)	1
1	PAHZZ	73342	29503232	SPACER, RING 1.89MM (0.07 IN)	1
2	AHHHH	73342	29502046	CARRIER ASSY, P3	1
3	PAHZZ	73342	29500689	.RING, RETAINING	1
4	PAHZZ	73342	29501575	.WASHER, RECESSED	1
5	PAHZZ	73342	29501574	.SPINDLE, MECHANICALL	4
6	PAHZZ	73342	29502048	.CARRIER, GEAR ASSEMB	1
7	PAHZZ	73342	29505606	.BUSHING, SLEEVE	1
8	PAHZZ	73342	29511406	.BEARING, WASHER, THRU	8
9	PAHZZ	73342	29516199	.BEARING, SLEEVE	8
10	PAHZZ	73342	29502831	.GEAR SET, BEVEL, MATC	1
				END OF FIGURE	

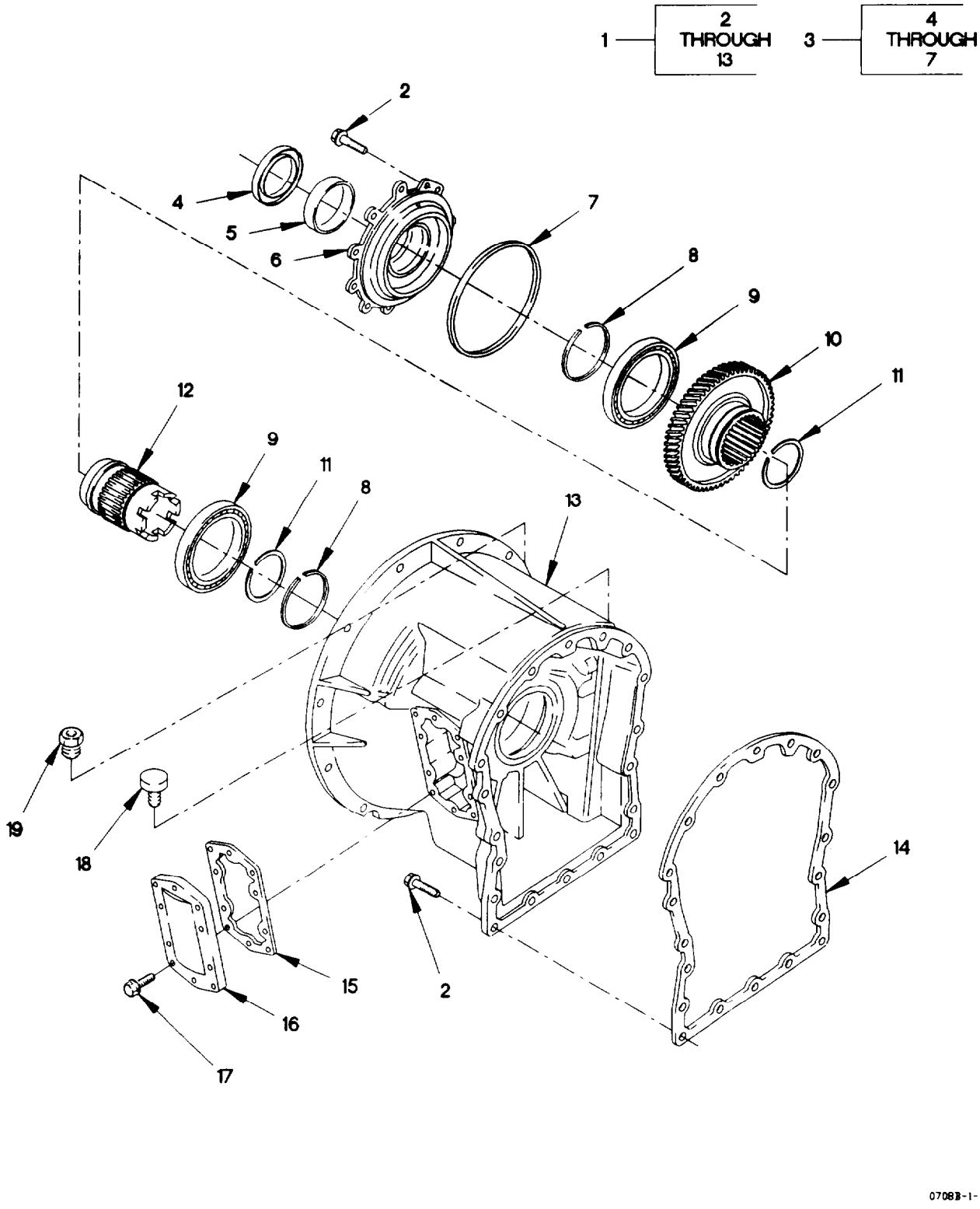

Figure 117. Converter Housing Module

(1) ITEM NO	(2) SMR CODE	(3) FSCM	(4) PART NUMBER	(5) DESCRIPTION AND USABLE ON CODE (UOC)	(6) QTY
				GROUP 0710: TRANSMISSION ASSEMBLY AND ASSOCIATED PARTS	
				FIG. 117 CONVERTER HOUSING MODULE	
1	AHHHH	73342	29503289	MODULE, CONV HSG	1
2	PAHZZ	11862	12337902	.SCREW, CAP, HEXAGON H M10 X 1.5 X 35	30
3	AHHHH	73342	29502370	.RETAINER ASSY, BRG	1
4	PAHZZ	73342	29507528	. .SEAL, PLAIN ENCASED	1
5	PAHZZ	73342	23048146	. .BUSHING, SLEEVE	1
6	PAHZZ	73342	23048044	. .HOUSING, MECHANICAL	1
7	PAHZZ	73342	23045614	. .SEAL RING, METAL	1
8	PAHZZ	73342	23042433	.GASKET CONSISTS OF (4) 23045819 SEALRINGS	2
9	PAHZZ	73342	23046439	.BEARING, ROLLER, CYLI	2
10	PAHZZ	73342	29502320	.GEAR, SPUR USED ON TRANSMISSION SERIAL NUMBERS PRIOR TO 6510005902	1
10	PAHZZ	73342	29511395	.GEAR, SPUR USED ON TRANSMISSION SERIAL NUMBERS 6510005902 AND SUBS	1
11	PAHZZ	73342	29503969	.RING, RETAINING	2
12	PAHZZ	73342	29503970	.HUB, BODY USED ON TRANSMISSION SERIAL NUMBERS PRIOR TO 6510005902	1
12	PAHZZ	73342	29511396	.HUB, BODY USED ON TRANSMISSION SERIAL NUMBERS 6510005902 THRU 6510024409	1
12	PAHZZ	73342	29514799	.HUB, BODY USED ON TRANSMISSION SERIAL NUMBERS 6510024410 AND SUBSEQUENT	1
13	PAHZZ	73342	29503271	.HOUSING TRAN, CONVER	1
14	PAHZZ	73342	29503288	GASKET	1
15	PAFZZ	73342	23048037	GASKET	1
16	PAFZZ	73342	23048038	COVER, ACCESS	1
17	PAFZZ	21969	DIN933-M10X25-8.8-B3B	BOLT, MACHINE M10 X .8 X 20	20
18	PAFZZ	73342	29502386	BUSHING, PIPE	1
19	PAHZZ	73342	23047102	BREATHER	1
				END OF FIGURE	

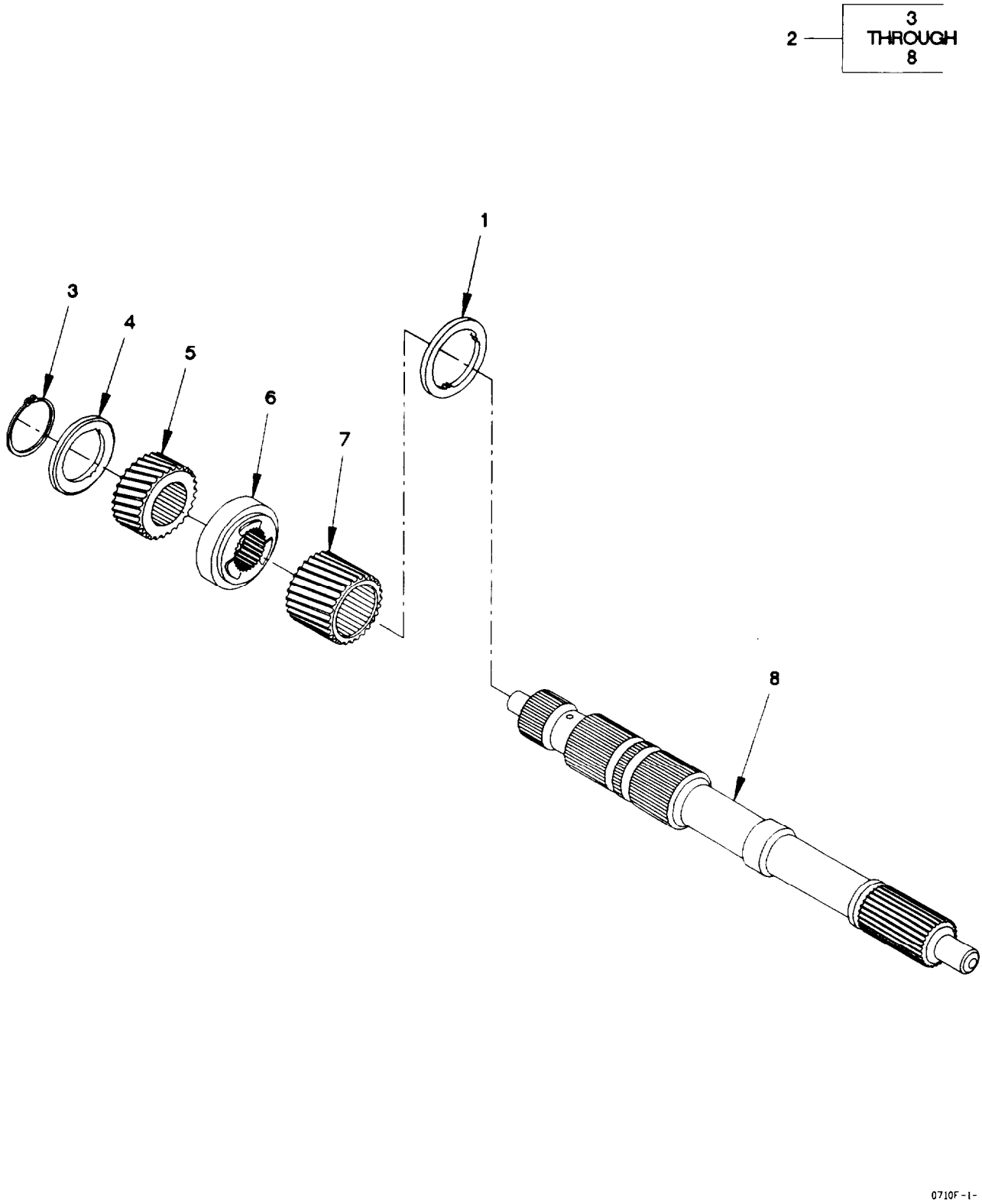

Figure 118. Mainshaft Module

(1) ITEM NO	(2) SMR CODE	(3) FSCM	(4) PART NUMBER	(5) DESCRIPTION AND USABLE ON CODE (UOC)	(6) QTY
				GROUP 0710: TRANSMISSION ASSEMBLY AND ASSOCIATED PARTS	
				FIG. 118 MAINSHAFT MODULE	
1	PAHZZ	73342	29503225	BEARING, WASHER, THRU	1
2	AHHHH	73342	29506076	MAIN SHAFT, MODULE	1
3	PAHZZ	73342	29501538	.RING, RETAINING	1
4	PAHZZ	73342	29500768	.BEARING, WASHER, THRU	1
5	PAHZZ	73342	29500767	.GEAR, HELICAL	1
6	PAHZZ	73342	29505511	.SPACER, SLEEVE	1
7	PAHZZ	73342	29502001	.GEAR, HELICAL	1
8	PAHZZ	73342	29506077	.SHAFT, SHOULDERED	1
				END OF FIGURE	

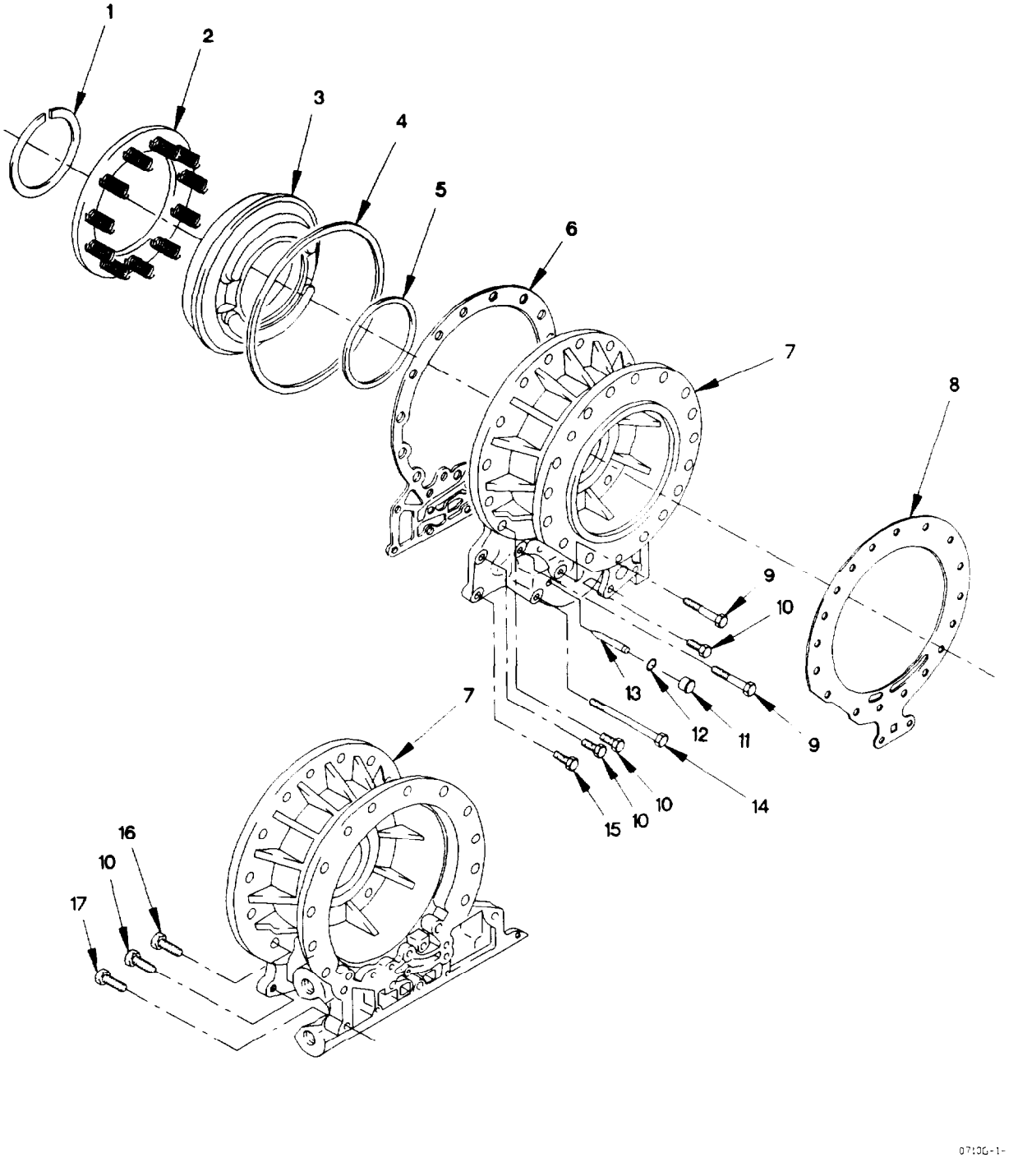

Figure 119. Adapter Housing Module

(1) ITEM NO	(2) SMR CODE	(3) FSCM	(4) PART NUMBER	(5) DESCRIPTION AND USABLE ON CODE (UOC)	(6) QTY
				GROUP 0710: TRANSMISSION ASSEMBLY AND ASSOCIATED PARTS	
				FIG. 119 ADAPTER HOUSING MODULE	
1	PAHZZ	73342	23045657	RING, RETAINING	1
2	PAHZZ	73342	29500867	RETAINER, CLUTCH PLA	1
3	PAHZZ	73342	29503053	PISTON, CLUTCH SHAFT	1
4	PAHZZ	73342	23045654	SEAL RING, METAL	1
5	PAHZZ	73342	23045655	SEAL RING, METAL	1
6	PAHZZ	73342	29534357	GASKET	1
7	PAHZZ	73342	29506122	ADAPTER, HOUSING	1
8	PAHZZ	73342	29506323	GASKET	1
9	PAHZZ	73342	11515469	SCREW, CAP, HEXAGON H M10 X 1.5 X 100	2
10	PAHZZ	60248	7000210070	BOLT, MACHINE M10 X 1.5 X 70	4
11	PAFZZ	73342	29507699	PLUG, PROTECTIVE, DUS	1
12	PAFZZ	73342	29507700	O-RING	1
13	PAHZZ	73342	295007751	STRAINER ELEMENT, SE	1
14	PAHZZ	73342	11515371	BOLT, MACHINE M10 X 1.7 X 205	1
15	PAHZZ	81495	071 410 36	BOLT, MACHINE M10 X 1.5 X 40	21
16	PAHZZ	15526	DIN931-M12X10.9-A4C	SCREW, CAP, HEXAGON H M12 X 1.75 X 60	3
17	PAHZZ	73342	11515190	BOLT, MACHINE M10 X 1.7 X 45	15
				END OF FIGURE	

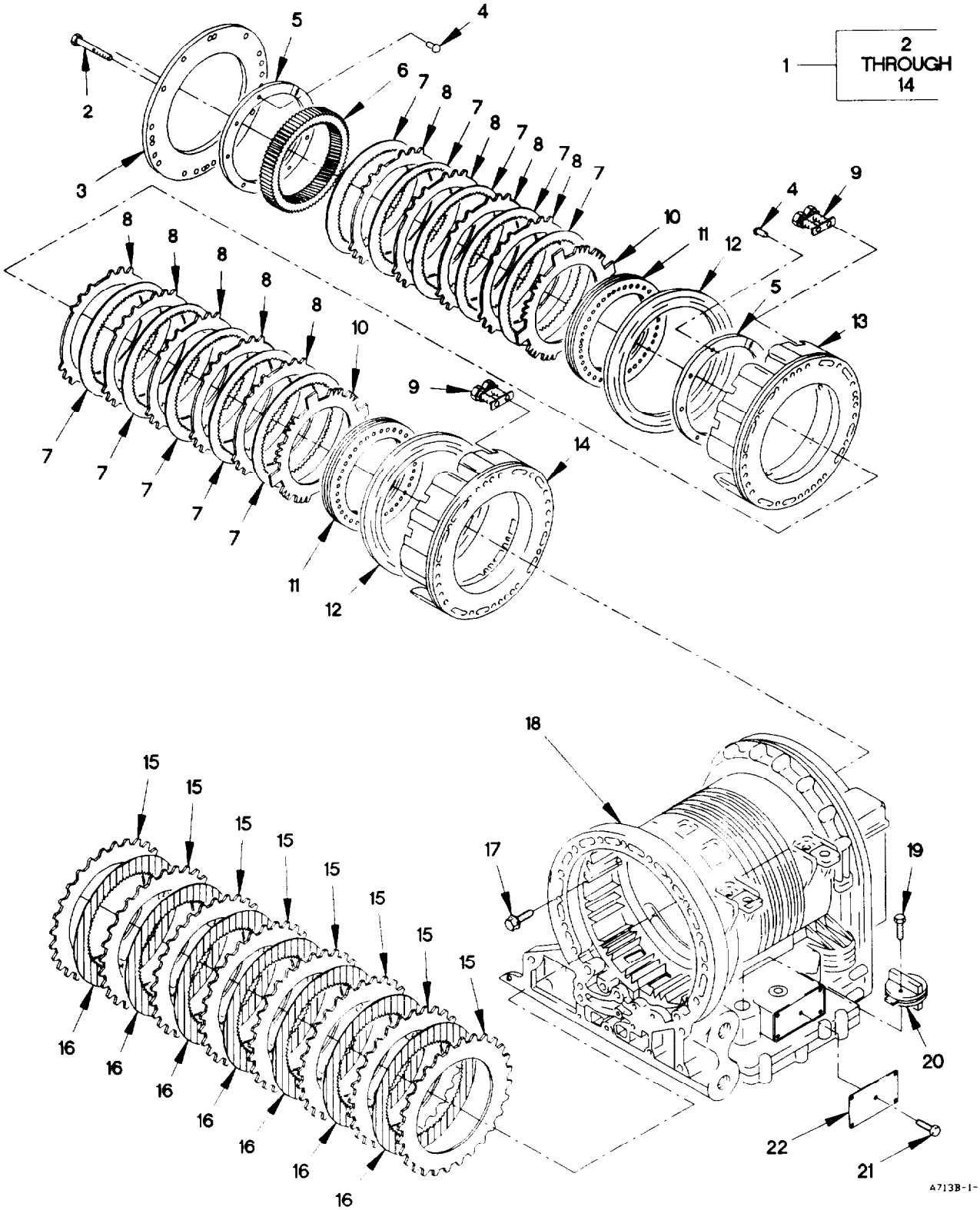

Figure 120. C3, C4, and C5 Clutch

(1) ITEM NO	(2) SMR CODE	(3) FSCM	(4) PART NUMBER	(5) DESCRIPTION AND USABLE ON CODE (UOC)	(6) QTY
				GROUP 0713: INTERMEDIATE CLUTCH	
				FIG. 120 C3, C4 AND C5 CLUTCH	
1	AHHHH	73342	29501359	CLUTCH ASSY	1
2	PAHZZ	73342	11505328	.SCREW, CAP, HEXAGON H M10 X 1.5 X 90	12
3	PAHZZ	73342	29501447	.PRESSURE PLATE ASSE	1
4	PAHZZ	73342	11506706	.RIVET, BLIND	12
5	PAHZZ	73342	29503837	.RING, DRIVE PLATE, TR	6
6	PAHZZ	73342	29503079	.GEAR, SPUR	1
7	PAHZZ	73342	29528207	.PLATE, INTERMEDIATE,	10
8	PAHZZ	73342	29501423	.PLATE, INTERMEDIATE,	9
9	PAHZZ	73342	29505570	.ASSEMBLY, RETURN SPI	8
10	PAHZZ	73342	29501424	.PLATE, DAMPER, TRANSM	2
11	PAHZZ	73342	29505861	.RETAINER, CLUTCH PLA	2
12	PAHZZ	73342	23048367	.PISTON, CLUTCH SHAFT	2
13	PAHZZ	73342	29501449	.HOUSING MECHANICAL	1
14	PAHZZ	73342	29501360	.HOUSING MECHANICAL	1
15	PAHZZ	73342	23045573	PLATE, INTERMEDIATE,	8
16	PAHZZ	73342	29532371	PLATE, INTERMEDIATE,	7
17	PAOZZ	11862	12337902	SCREW, CAP, HEXAGON H M10 X 1.5 X 35	12
18	PAHZZ	73342	29507511	HOUSING, TRANSMISSIO	1
19	PAHZZ	73342	11515355	SCREW, CAP, HEXAGON H	1
20	PAHZZ	73342	12092196	PLUG, PROTECTIVE, DUS	1
21	PAOZZ	73342	141445	SCREW, MACHINE	1
22	PAOZZ	73342	29503353	PLATE, IDENTIFICATIO	1
				END OF FIGURE	

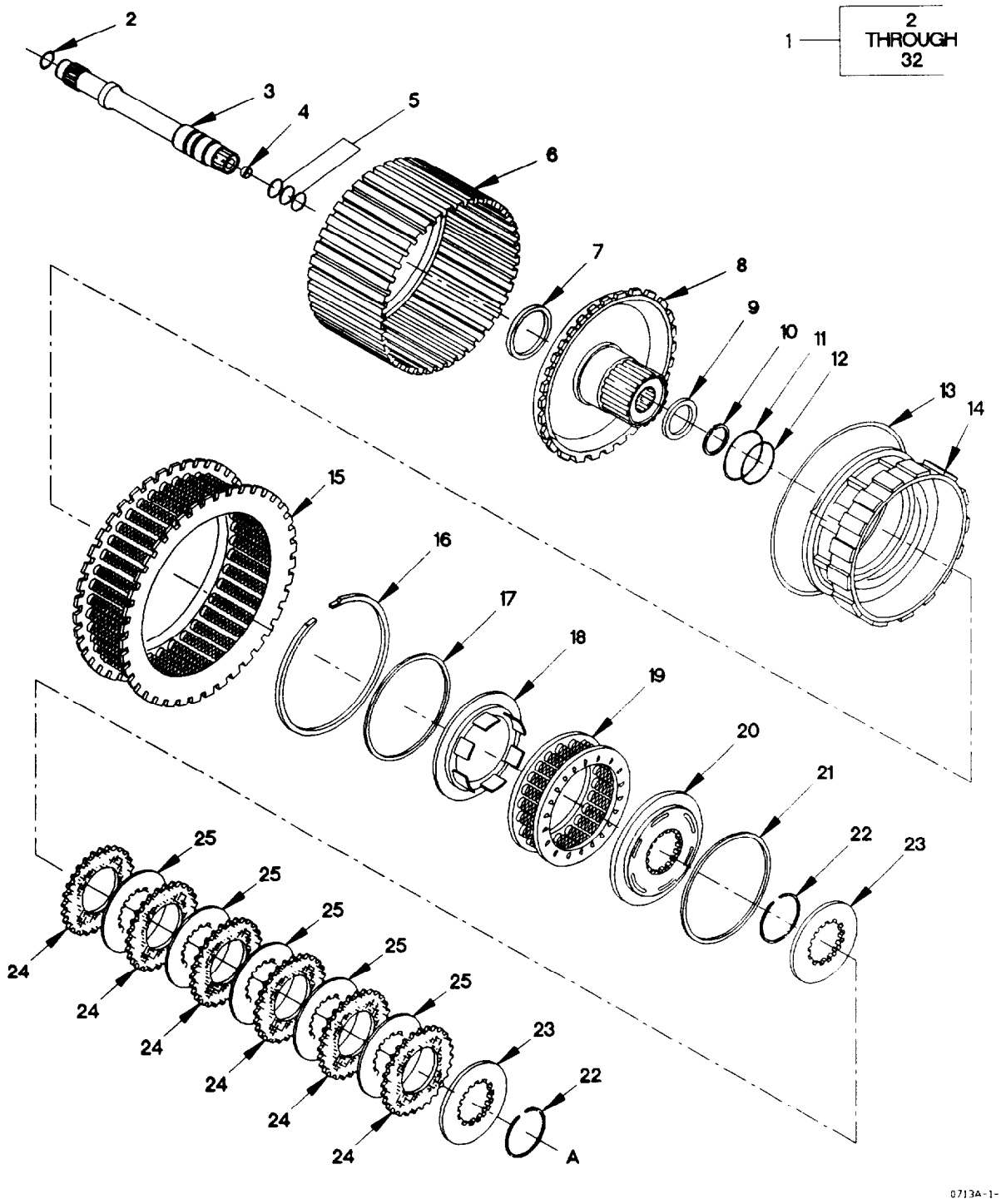

Figure 121. Rotating Clutch Module (Sheet 1 of 2)

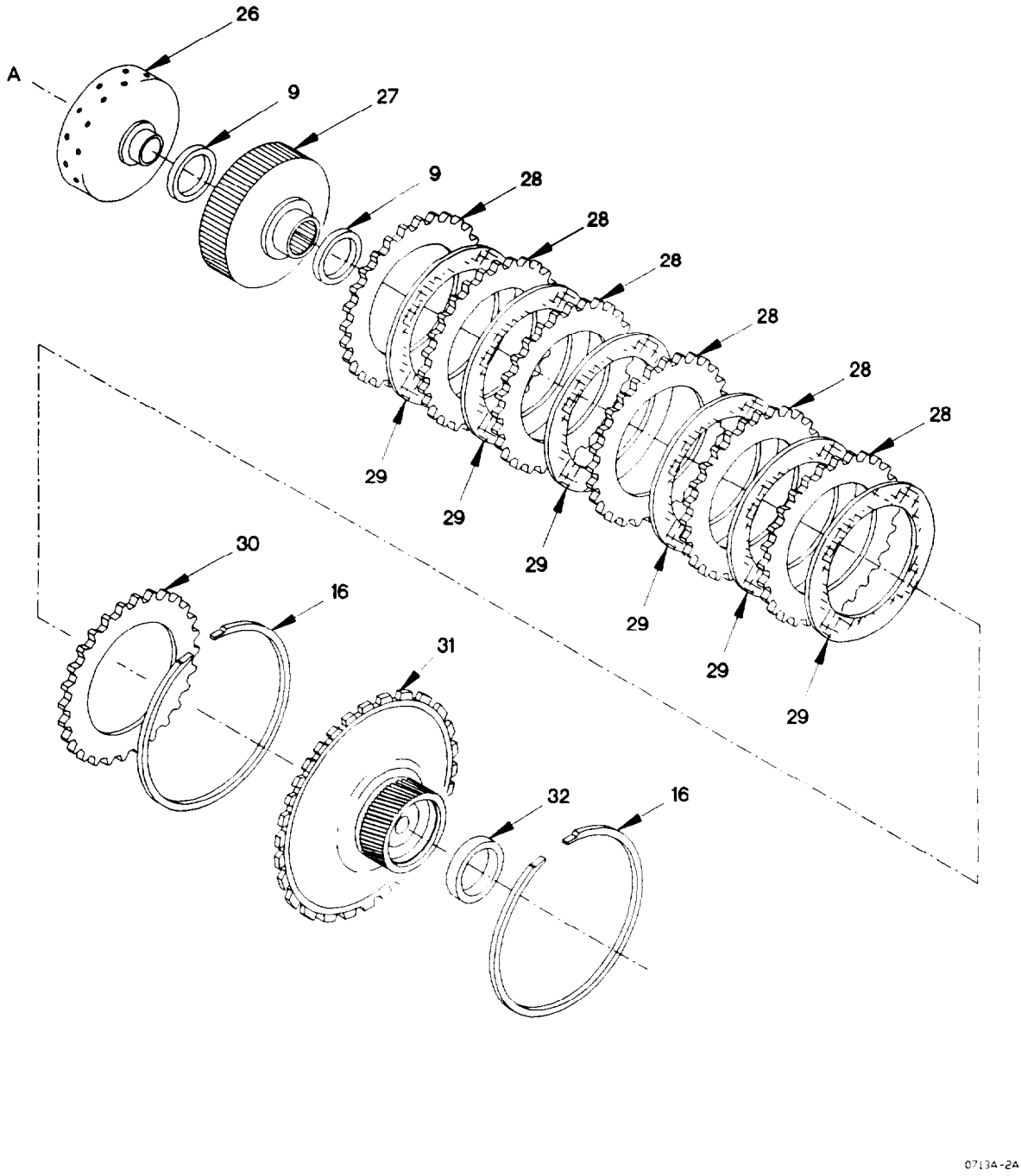

Figure 121. Rotating Clutch Module (Sheet 2 of 2)

(1) ITEM NO	(2) SMR CODE	(3) FSCM	(4) PART NUMBER	(5) DESCRIPTION AND USABLE ON CODE (UOC)	(6) QTY
				GROUP 0713: INTERMEDIATE CLUTCH	
				FIG. 121 ROTATING CLUTCH MODULE	
1	AHHHH	73342	29503255	MODULE, ROT CLUTCH	1
2	PAHZZ	73342	23046274	.O-RING	1
3	PAHZZ	73342	29503278	.SHAFT, SHOULDERED USED ON TRANSMISSION SERIAL NUMBERS PRIOR TO 6510024410	1
3	PAHZZ	73342	29516494	.SHAFT, SHOULDERED USED ON TRANSMISSION SERIAL NUMBERS 6510024410 AND SUBSEQUENT	1
4	PAHZZ	73342	29505560	.BUSHING, SLEEVE	1
5	PAHZZ	73342	23042434	.PARTS KIT, SEAL REPL	1
6	PAHZZ	73342	29501076	.CLUTCH ASSEMBLY, FRI	1
7	PAHZZ	73342	23045582	.BUSHING, SLEEVE	1
8	PAHZZ	73342	29503251	.GEAR, ANTIBACKLASH, S	1
9	PAHZZ	73342	23047854	.BEARING, WASHER, THRU	3
10	PAHZZ	73342	29505891	.RIGN, RETAINING	1
11	PAHZZ	73342	23045611	.SEAL RING, METAL	1
12	PAHZZ	73342	23045612	.SEAL RING, METAL	1
13	PAHZZ	73342	23045613	.SEAL RING, METAL	1
14	PAHZZ	73342	23048692	.PISTON, CLUTCH SHAFT	1
15	PAHZZ	73342	29503215	.CLUTCH, SPRING	1
16	PAHZZ	73342	23046291	.RING, RETAINING	3
17	PAHZZ	73342	23045614	.SEAL RING, METAL	1
18	PAHZZ	73342	29506195	.PISTON, CLUTCH SHAFT	1
19	PAHZZ	73342	23045586	.CLUTCH, SPRING	1
20	PAHZZ	73342	23048133	.PISTON, CLUTCH SHAFT	1
21	PAHZZ	73342	23045615	.SEAL RING, METAL	1
22	PAHZZ	73342	23045618	.RING, RETAINING	2
23	PAHZZ	73342	23045619	.DISK, CLUTCH	2
24	PAHZZ	73342	23045588	.PLATE, INTERMEDIATE	6
25	PAHZZ	73342	23045589	.DISK, CLUTCH	5
26	PAHZZ	73342	29516169	.HUB, BODY	1
27	PAHZZ	73342	29500687	.HUB, BODY	1
28	PAHZZ	73342	29503141	.DISK, CLUTCH	6
29	PAHZZ	73342	23048628	.PLATE, INTERMEDIATE	6
30	PAHZZ	73342	23048530	.DISK, CLUTCH	1
31	PAHZZ	73342	29503084	.GEAR ASSY, SUN	1
32	PAHZZ	73342	29500708	.BUSHING, SLEEVE	1
				END OF FIGURE	

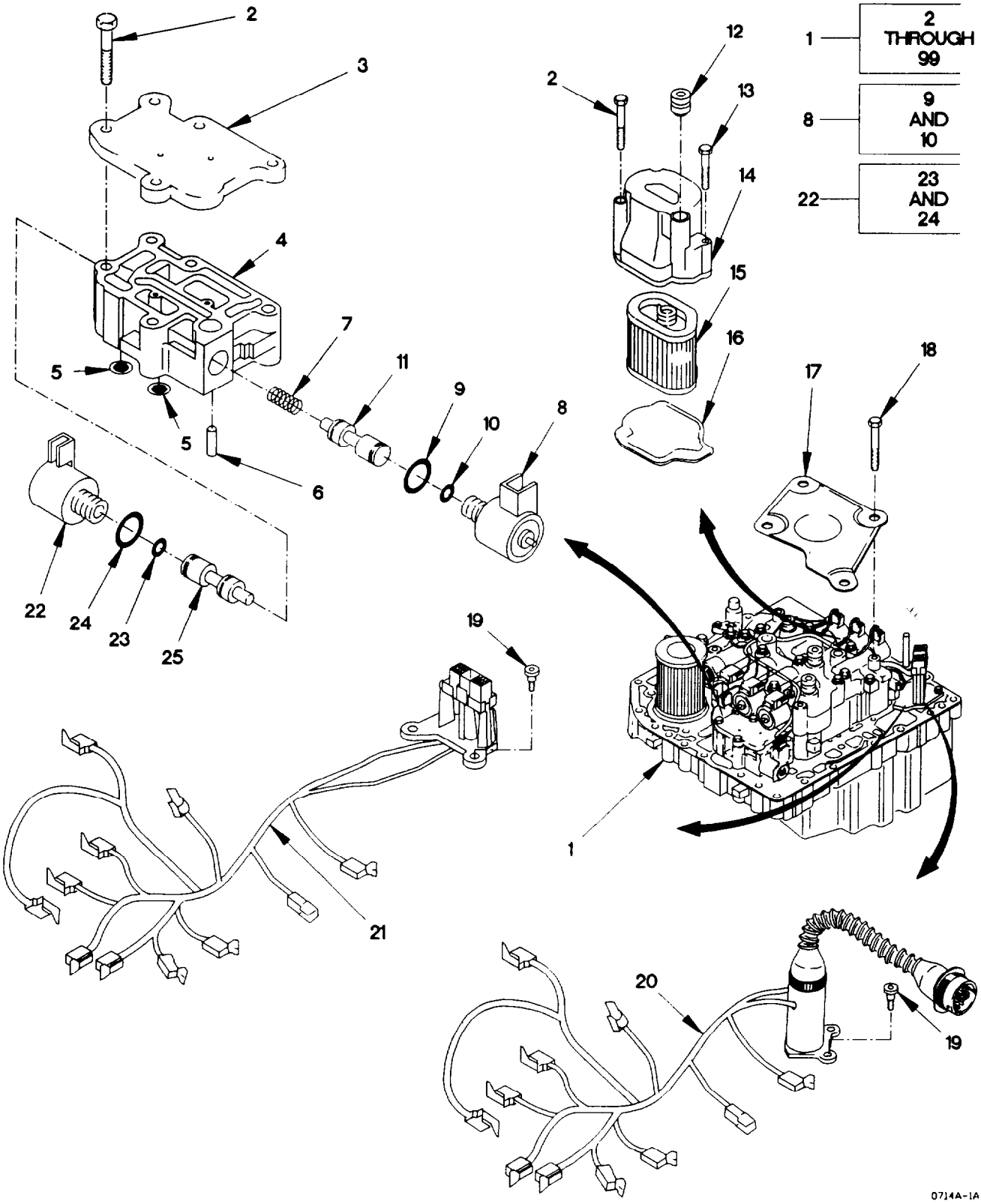

Figure 122. Control Valve Module (Sheet 1 of 4)

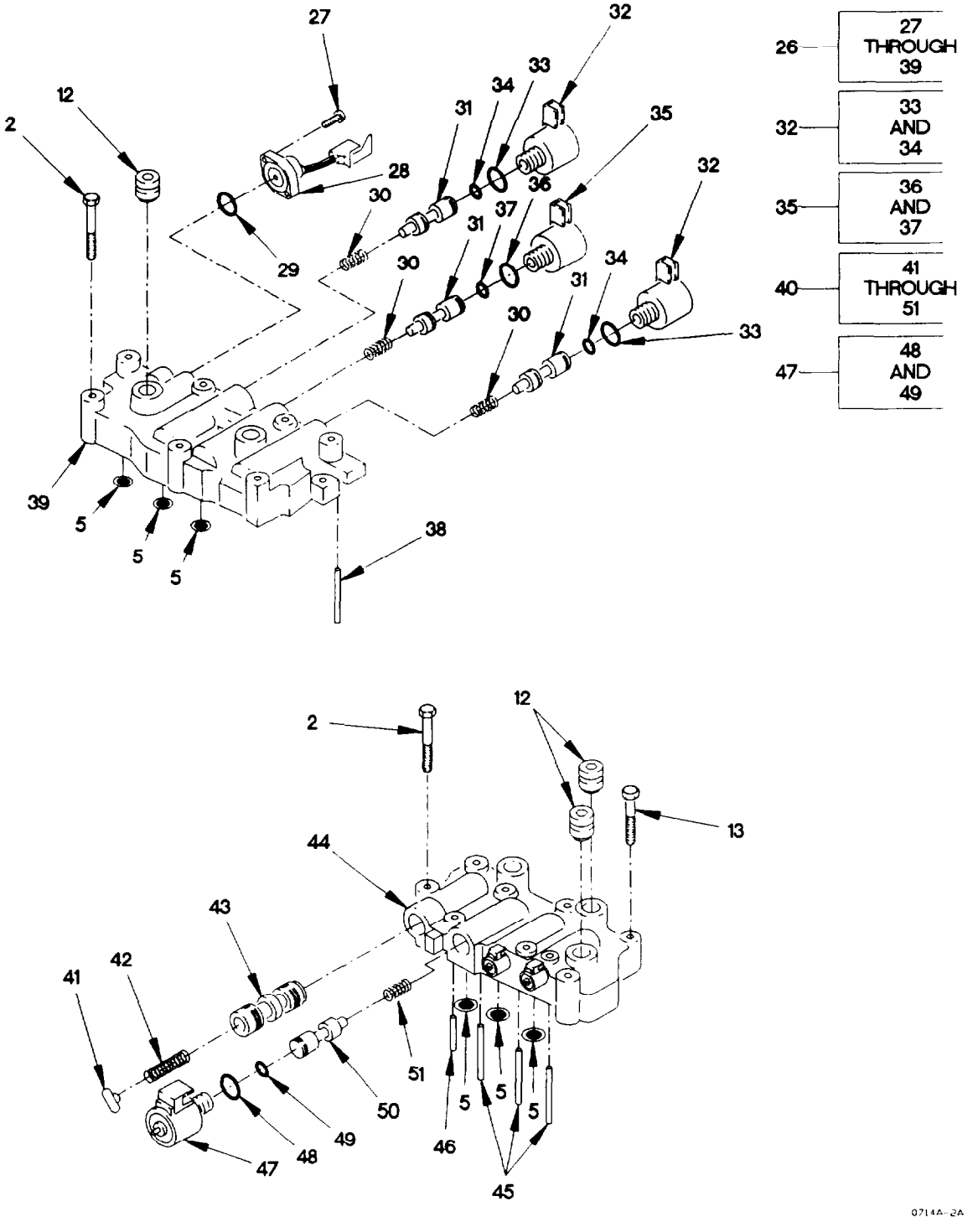

Figure 122. Control Valve Module (Sheet 2 of 4)

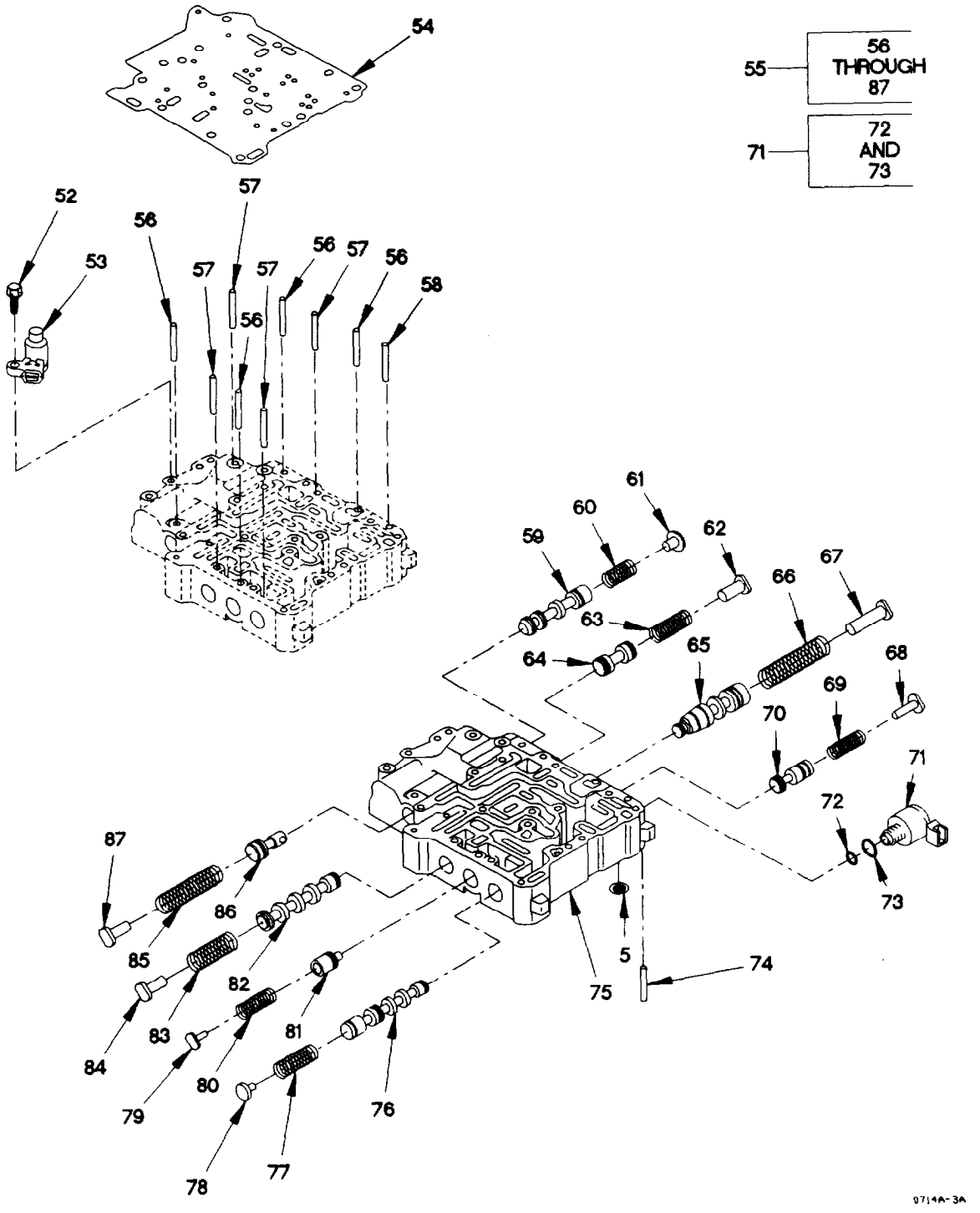

Figure 122. Control Valve Module (Sheet 3 of 4)

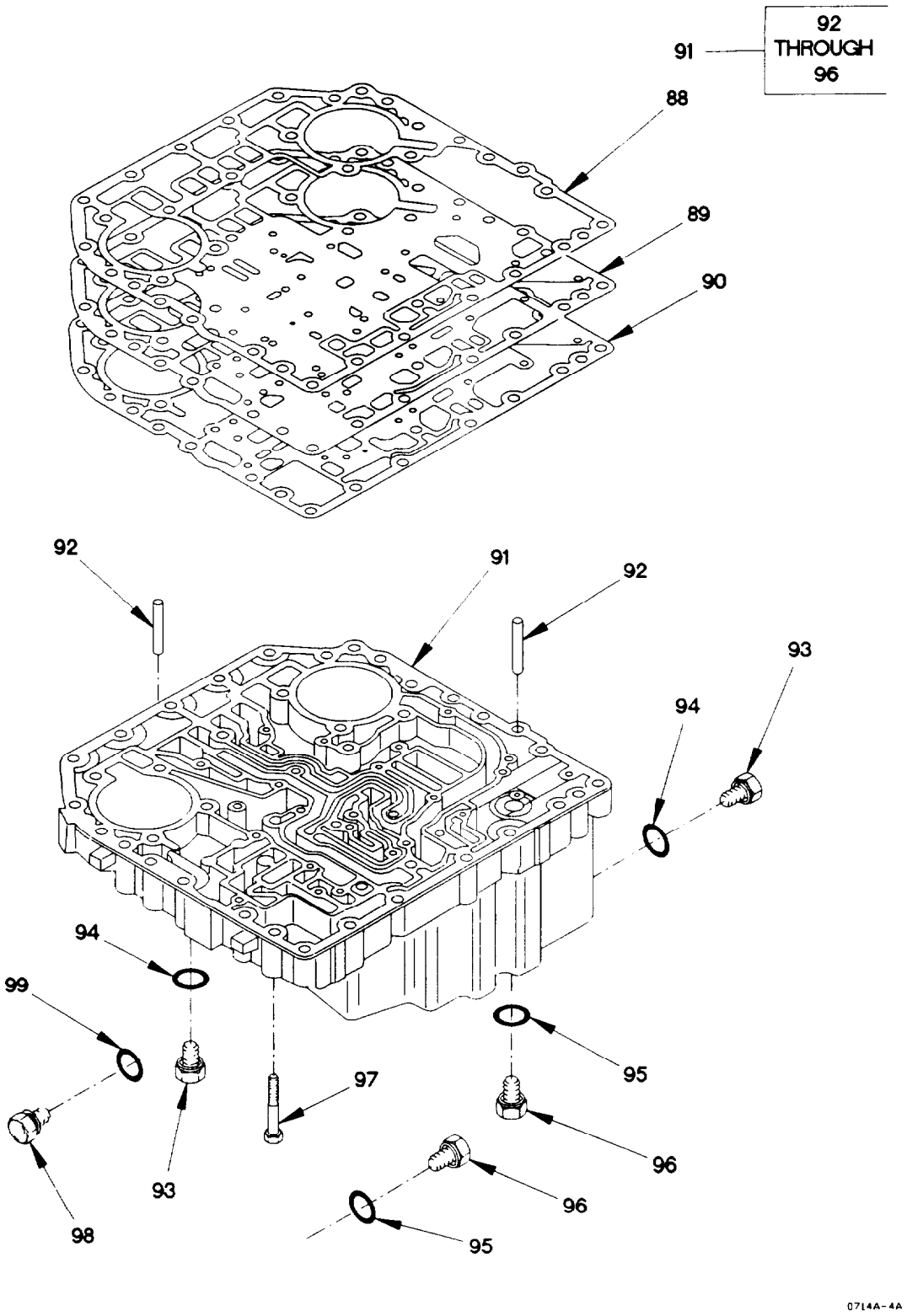

Figure 122. Control Valve Module (Sheet 4 of 4)

(1) ITEM NO	(2) SMR CODE	(3) FSCM	(4) PART NUMBER	(5) DESCRIPTION AND USABLE ON CODE (UOC)	(6) QTY
				GROUP 0714: SERVO UNIT FIG. 122 CONTROL VALVE MODULE	
1	AFFFF	73342	29503519	VALVE ASSY, CONTROL	1
2	PAFZZ	73342	11515310	.BOLT, MACHINE M6 X 1.0 X 95	21
3	PAFZZ	73342	29506205	.COVER, ACCESS C6 BODY	1
4	PAFZZ	73342	29503542	.MANIFOLD ASSEMBLY, H	1
5	PAFZZ	73342	29502194	.FILTER ELEMENT, FLUI	9
6	PAFZZ	73342	23049307	.PIN, STRAIGHT, HEADLE	2
7	PAFZZ	73342	29502195	.SPRING, HELICAL, COMP 6MM X 1.0 X 20 LG	1
8	PAFFF	73342	29500888	.SOLENOID, ELECTRICAL	1
9	PAFZZ	73342	29503380	. .O-RING	1
10	PAFZZ	73342	29503382	. .O-RING	1
11	PAFZZ	73342	29503564	.VALVE, SOLENOID	1
12	PAFZZ	73342	23046376	.SEAL, NONMETALLIC RO	4
13	PAFZZ	62445	111 2290	.BOLT, MACHINE M6 X 1.0 X 70	9
14	PAFZZ	73342	29502068	.COVER, FLUID FILTER	1
15	PAFZZ	73342	29503670	.STRAINER, SUCTION	1
16	PAFZZ	73342	29503263	.GASKET	1
17	PAFZZ	73342	29505992	.COVER, ACCESS	1
18	PAFZZ	18876	13142983-22/11	.BOLT, MACHINE M6 X 1.0 X 95	4
19	PAFZZ	73342	29508407	.BOLT, SHOULDER	3
20	PAFZZ	73342	29516324	.WIRING HARNESS, BRAN USED ON TRANSMISSION SERIAL NUMBERS 6510032369 AND SUBSEQUENT	1
21	PAFZZ	73342	29503662	.WIRING HARNESS, BRAN USED ON TRANSMISSION SERIAL NUMBERS PRIOR TO 6510032369	1
22	PAFZZ	73342	23049304	.SOLENOID, ELECTRICAL	1
23	PAFZZ	73342	29503381	. .O-RING	1
24	PAFZZ	73342	29503383	. .O-RING	1
25	PAFZZ	73342	29503565	.SLIDE, DIRECTIONAL C	1
26	AFFFF	73342	29503596	.BODY ASSY, SOLENOID	1
27	PAFZZ	73342	29503641	. .SCREW, CAP, SOCKET HE M5 X 0.8 X 12	2
28	PAFFF	73342	29506484	. .SWITCH, PRESSURE	1
29	PAFZZ	73342	29501439	. . .O-RING	1
30	PAFZZ	73342	29502195	. .SPRING, HELICAL, COMP	2
31	PAFZZ	73342	29503564	. .VALVE, SOLENOID	2
32	PAFZZ	73342	29507453	. .SOLENOID, ELECTRICAL	1
33	PAFZZ	73342	29503382	. . .O-RING	1
34	PAFZZ	73342	29503380	. . .O-RING	1
35	PAFZZ	73342	23049306	. .SOLENOID, ELECTRICAL	1
36	PAFZZ	73342	29503381	. . .O-RING	1
37	PAFZZ	73342	23014057	. . .O-RING	1
38	PAFZZ	73342	23049307	. .PIN, STRAIGHT, HEADLE	3
39	PAFZZ	73342	29507432	. .BODY, VALVE ROTATING CLUTCH	1

(1) ITEM NO	(2) SMR CODE	(3) FSCM	(4) PART NUMBER	(5) DESCRIPTION AND USABLE ON CODE (UOC)	(6) QTY
40	AFFFF	73342	29503595	.BODY ASSY, SOLENOID	1
41	PAFZZ	73342	23049343	. .STOP, MECHANICAL	1
42	PAFZZ	73342	23049332	. .SPRING, HELICAL, COMP	1
43	PAFZZ	73342	23049321	. .VALVE, RESTRICTOR CH	1
44	PAFZZ	73342	29507433	. .BODY, VALVE STATIONARY CLUTCH	1
45	PAFZZ	73342	23049307	. .PIN, STRAIGHT, HEADLE	3
46	PAFZZ	73342	23049372	. .PIN, SPRING	1
47	PAFZZ	73342	29507453	. .SOLENOID, ELECTRICAL	3
48	PAFZZ	73342	29503380	. . .O-RING	1
49	PAFZZ	73342	29503382	. . .O-RING	1
50	PAFZZ	73342	29503564	. .VALVE, SOLENOID	3
51	PAFZZ	73342	29502195	. .SPRING, HELICAL, COMP	3
52	PAFZZ	73342	11515315	.SCREW, CAP, HEXAGON H M6 X 1.0 X 20	2
53	PAFZZ	73342	29503531	.TRANSDUCER, MOTIONAL	1
54	PAFZZ	73342	29503588	.SPACER, PLATE	1
55	AFFFF	11083	29503675	.BODY ASSY, MAIN V	1
56	PAFZZ	73342	29500822	. .ROD, STRAIGHT, HEADLE 3 OD X 43	4
57	PAFZZ	73342	23049345	. .ROD, STRAIGHT, HEADLE 50D X 43LG	4
58	PAFZZ	73342	29500823	. .ROD, STRAIGHT, HEADLE	1
59	PAFZZ	73342	23049315	. .VALVE, RESTRICTOR CH	1
60	PAFZZ	73342	23049326	. .SPRING, HELICAL, COMP	1
61	PAFZZ	73342	23049337	. .STOP, MECHANICAL	1
62	PAFZZ	73342	23049338	. .STOP, MECHANICAL	1
63	PAFZZ	73342	23049327	. .SPRING, HELICAL, COMP	1
64	PAFZZ	73342	23049316	. .VALVE, RESTRICTOR CH	1
65	PAFZZ	73342	23049312	. .VALVE, RESTRICTOR CH	1
66	PAFZZ	73342	29500963	. .SPRING, HELICAL, COMP	1
67	PAFZZ	73342	29503663	. .STOP, MECHANICAL	1
68	PAFZZ	73342	29503674	. .STOP, MECHANICAL	1
69	PAFZZ	73342	23049325	. .SPRING, HELICAL, COMP	1
70	PAFZZ	73342	29503673	. .VALVE, RESTRICTOR CH	1
71	PAFZZ	73342	23049304	. .SOLENOID, ELECTRICAL	1
72	PAFZZ	73342	29503383	. . .O-RING	1
73	PAFZZ	73342	29503381	. . .O-RING	1
74	PAFZZ	73342	11513011	. .PIN, SPRING	1
75	PAFZZ	73342	29507429	. .BODY, VALVE	1
76	PAFZZ	73342	29500956	. .BODY, VALVE	1
77	PAFZZ	73342	29501071	. .SPRING, HELICAL, COMP	1
78	PAFZZ	73342	23049341	. .STOP, MECHANICAL	1
79	PAFZZ	73342	23049342	. .STOP, MECHANICAL	1
80	PAFZZ	73342	23049391	. .SPRING, HELICAL, COMP	1
81	PAFZZ	73342	23049320	. .VALVE, RESTRICTOR CH	1
82	PAFZZ	73342	23049318	. .VALVE, RESTRICTOR CH	1
83	PAFZZ	73342	6885065	. .SPRING, HELICAL, COMP	1
84	PAFZZ	73342	23049340	. .STOP, MECHANICAL	1
85	PAFZZ	73342	23049329	. .SPRING, HELICAL, COMP	1
86	PAFZZ	73342	23049317	. .VALVE, REGULATING, FL	1
87	PAFZZ	73342	23049339	. .STOP, MECHANICAL	1

(1) ITEM NO	(2) SMR CODE	(3) FSCM	(4) PART NUMBER	(5) DESCRIPTION AND USABLE ON CODE (UOC)	(6) QTY
88	PAFZZ	73342	29503283	.GASKET	1
89	PAFZZ	73342	29524397	.SPACER, PLATE	1
90	PAFZZ	73342	29524394	.GASKET	1
91	PAFZZ	73342	29507443	.SPACER, PLATE USED ON TRANSMISSION SERIAL NUMBERS PRIOR TO 6510069120	1
91	PAFZZ	73342	29524444	.SPACER, PLATE USED ON TRANSMISSION SERIAL NUMBERS 6510069120 AND SUBSEQUENT	1
92	PAFZZ	73342	23046354	. .PIN, STRAIGHT, HEADLE	2
93	PAOZZ	73342	29503360	. .PLUG, MACHINE THREAD	2
94	PAOZZ	73342	23019664	. .O-RING PART OF KIT P/N 29503829, 29526899	2
95	PAOZZ	73342	23043446	. .O-RING	2
96	PAOZZ	73342	29500034	. .PLUG, MACHINE THREAD	2
97	PAOZZ	73342	29505612	.SCREW, CAP, HEXAGON H M10 X 1.5 X 55	18
98	PAOZZ	73342	29500034	.PLUG, MACHINE THREAD	1
99	PAOZZ	73342	23043446	.O-RING	1

END OF FIGURE

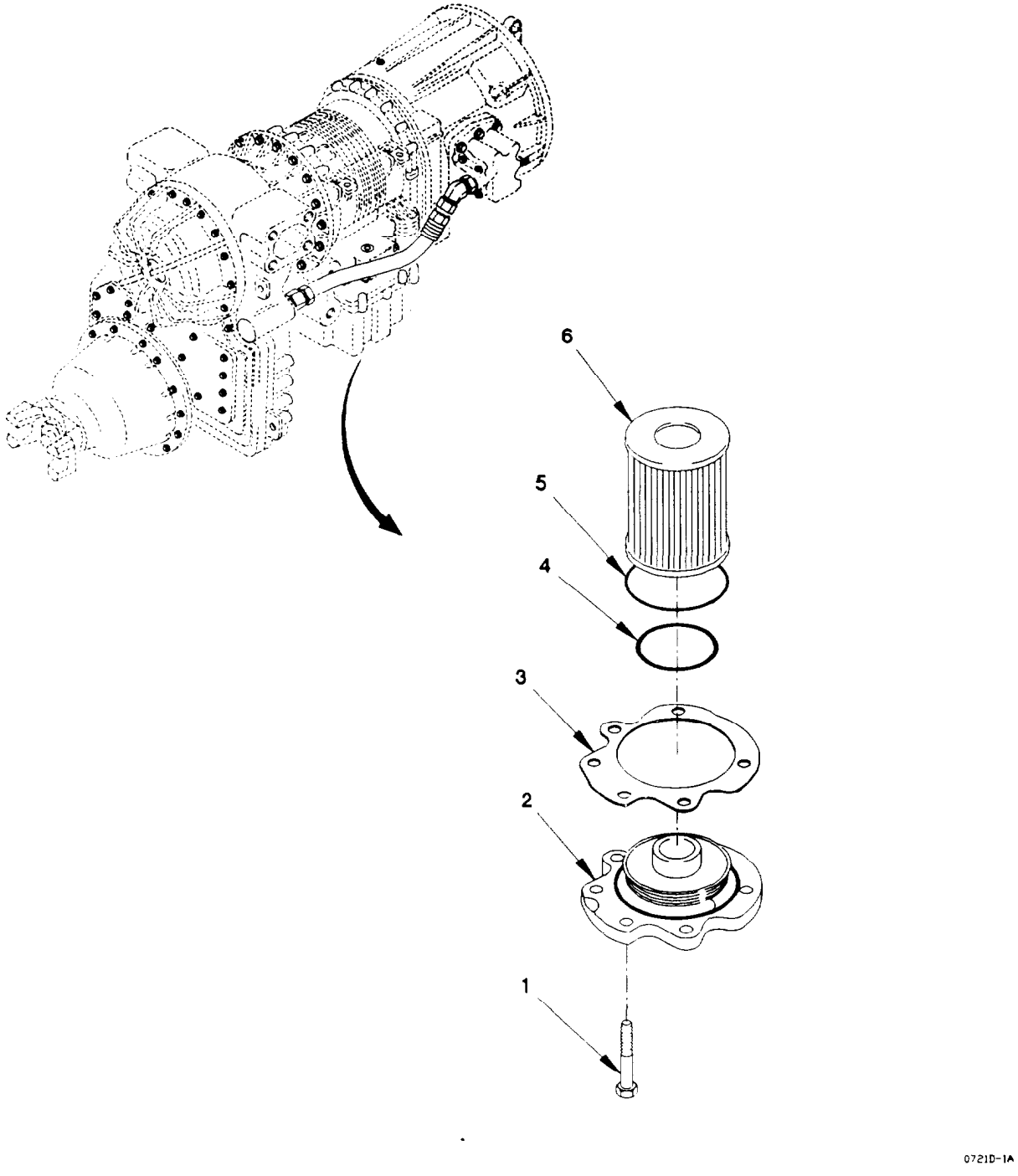

Figure 123. Transmission Oil Filters

(1) ITEM NO	(2) SMR CODE	(3) FSCM	(4) PART NUMBER	(5) DESCRIPTION AND USABLE ON CODE (UOC)	(6) QTY
				GROUP 0721: COOLERS, PUMPS, MOTORS FIG. 123 TRANSMISSION OIL FILTERS	
1	PAOZZ	73342	29505612	SCREW, CAP, HEXAGON H M10 X 1.5 X 55	12
2	PAOZZ	73342	29507434	COVER, ACCESS USED ON TRANSMISSION SERIAL NUMBERS PRIOR TO 6510069120	2
2	PAOZZ	73342	29524447	COVER, ACCESS USED ON TRANSMISSION SERIAL NUMBERS 6510069120 AND SUBSEQUENT	2
3	KFOZZ	73342	29524449	GASKET USED ON TRANSMISSION SERAL NR. 6510069120 AND SUBSEQUENT PART OF KIT P/N 29526889	2
4	PAOZZ	73342	29501469	O-RING USED ON TRANSMISSION SERIAL NUMBERS PRIOR TO 6510069120 PART OF KIT P/N 29503829	2
4	PAOZZ	73342	29524448	O-RING USED ON TRANSMISSION SERIAL NUM 6510069120AND SUBSEQUENT, PART OF KIT P/N 29526889	2
5	PAOZZ	73342	29507437	O-RING PART OF KIT P/N 29503829, 29526899	2
6	PAOZZ	73342	29501202	FILTER ELEMENT, FLUI PART OF KIT P/N 29503829, 29526899	2
				END OF FIGURE	

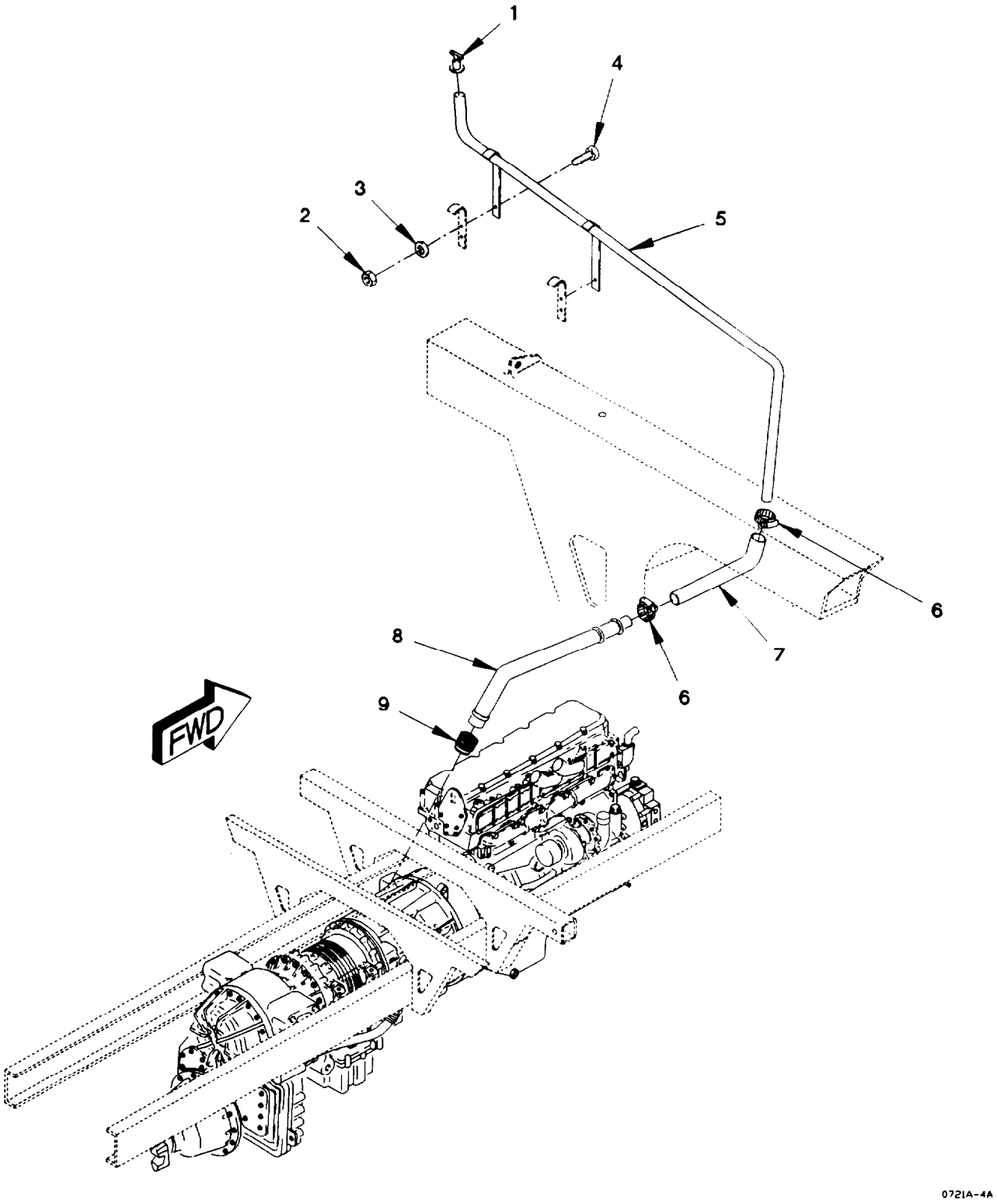

Figure 124. Transmission Oil Filler Tube and Cooler (Sheet 1 of 2)

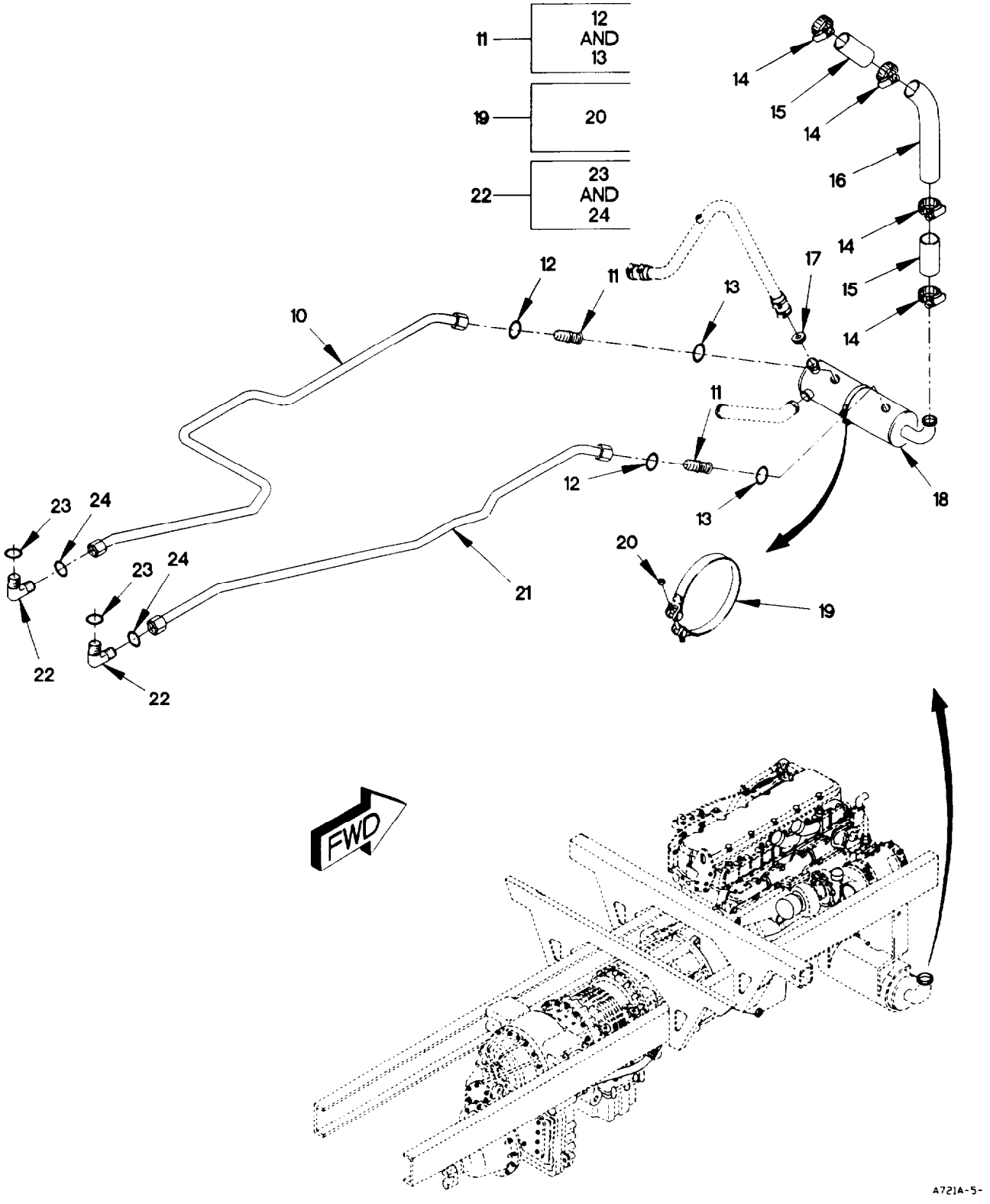

Figure 124. Transmission Oil Filler Tube and Cooler (Sheet 2 of 2)

(1) ITEM NO	(2) SMR CODE	(3) FSCM	(4) PART NUMBER	(5) DESCRIPTION AND USABLE ON CODE (UOC)	(6) QTY
				GROUP 0721: COOLERS, PUMPS, MOTORS	
				FIG. 124 TRANSMISSION OIL FILLER TUBE AND COOLER	
1	PAOZZ	01943	EXP25360	CAP, FILLER OPENING	1
2	PAOZZ	19207	12414315-006	NUT, SELF-LOCKING, HE M8 X 1.25	3
3	PAOZZ	34914	990 3861	WASHER, FLAT M8.4	3
4	PAOZZ	81495	071 408 32	BOLT, MACHINE M8 X 1.25 X 25	3
				UOC: LAC, LWC,	
5	PAOZZ	19207	12420426	TUBE, BENT, METALLIC	1
				UOC: LAC, LWC,	
5	PAOZZ	0FW39	12420543	FILLER NECK, VEHICUL	1
				UOC: LAA, LAB, LAD, LWB, LWD,	
6	PAOZZ	7Z588	9420	CLAMP, HOSE	2
7	PAOZZ	19207	12418460-002	HOSE, PREFORMED	1
8	PAOZZ	19207	12378887	FILLER NECT	1
9	PAFZZ	73342	29507823	SEAL, NONMETALLIC RO (PROVIDED WITH TRANSMISSION)	2
10	XDOZZ	19207	12420362	TUBE ASSEMBLY, METAL ORDER 12421858-001 AS REPLACEMENT PART	1
11	PAOZZ	19207	12421890-001	ADAPTER, STRAIGHT USED WITH HOSE ASSEMBLIES	2
12	PAOZZ	0TE27	F4001-16	.PACKING, PREFORMED	2
13	PAOZZ	81343	J515-16-3	.O-RING	1
14	PAOZZ	25281	065S9	CLAMP, HOSE	4
15	PAOZZ	16632	STE1002	HOSE, PREFORMED	2
16	PAOZZ	0FW39	12414381-001	TUBE, BENT, METALLIC	1
17	PAOZZ	19207	12420493	RESTRICTOR UNIT, FLU	1
18	PAOZZ	78385	12414334-001	COOLER, FLUID, TRANSM	1
19	PAOZZ	0FW39	12421379-005	STRAP, RETAINING	1
20	PAOZZ	96906	MS21045L5	.NUT, SELF-LOCKING HE 5/16-24	1
21	XDOZZ	19207	12414437	TUBE ASSEMBLY, METAL ORDER 12421857 AS REPLACEMENT PART	1
22	PAOZZ	19207	12421891-001	ELBOW, 90 DEGREE	2
23	PAOZZ	81343	J515-16-3	.O-RING	1
24	PAOZZ	0TE27	F4001-16	.PACKING, PREFORMED	2

END OF FIGURE

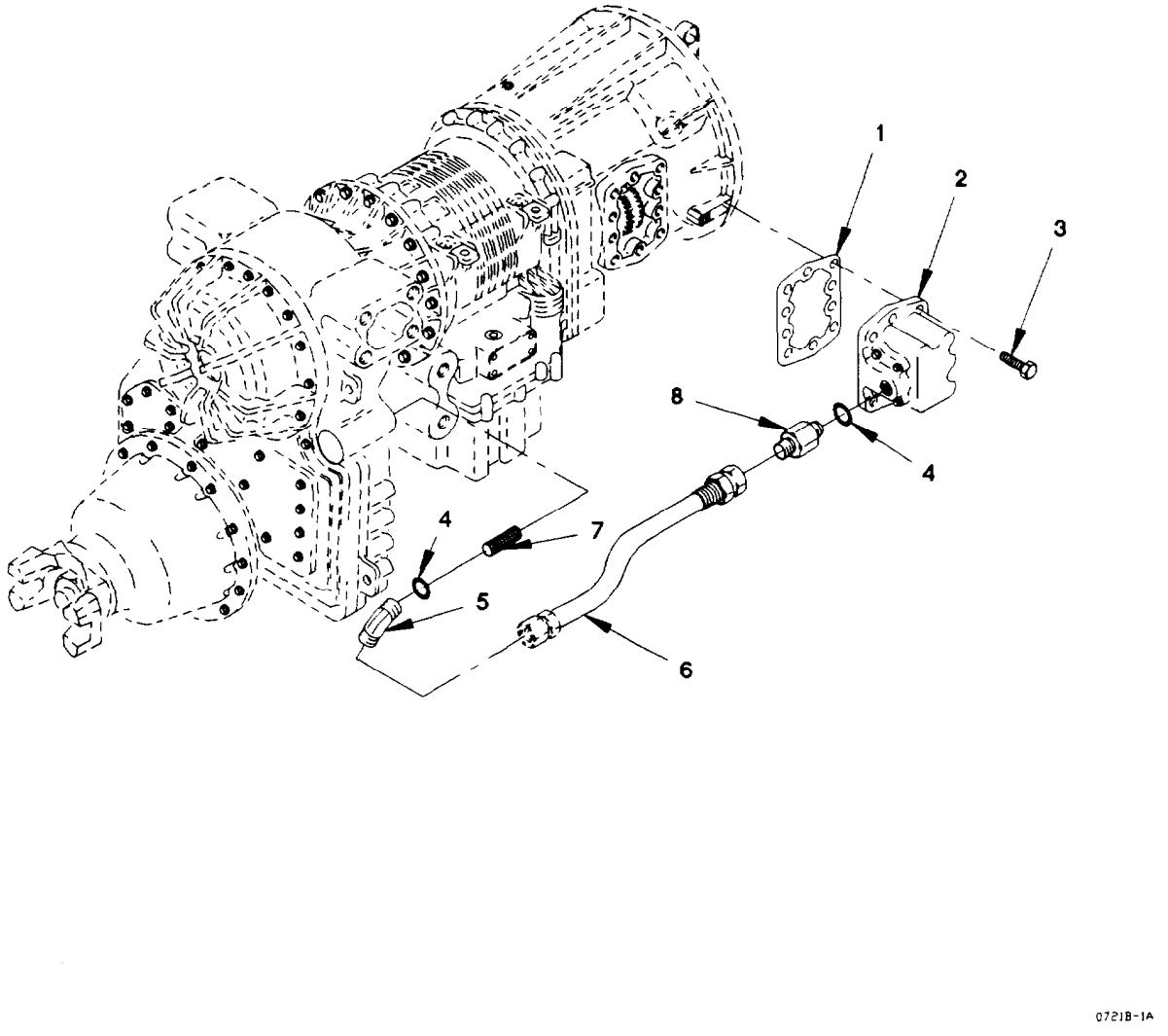

Figure 125. Scavenge Pump, Hose and Fittings

(1) ITEM NO	(2) SMR CODE	(3) FSCM	(4) PART NUMBER	(5) DESCRIPTION AND USABLE ON CODE (UOC)	(6) QTY
				GROUP 0721: COOLERS, PUMPS, MOTORS FIG. 125 SCAVENGE PUMP, HOSE AND FITTINGS	
1	PAFZZ	73342	29501144	GASKET	1
2	PAFZZ	73342	29506082	PARTS KIT, ROTARY PU	1
3	PAFZZ	11862	12337902	SCREW, CAP, HEXAGON H M10 X 1.5 X 35	9
4	PAFZZ	73342	29500969	O-RING	2
5	PAFZZ	73342	29500645	ELBOW, HOSE TO BOSS	1
6	PAFZZ	73342	29506688	HOSE ASSEMBLY, NONME	1
7	PAFZZ	73342	29507750	FILTER ELEMENT, FLUI	1
8	PAFZZ	73342	9410206	ADAPTER, STRAIGHT, PI	1
				END OF FIGURE	

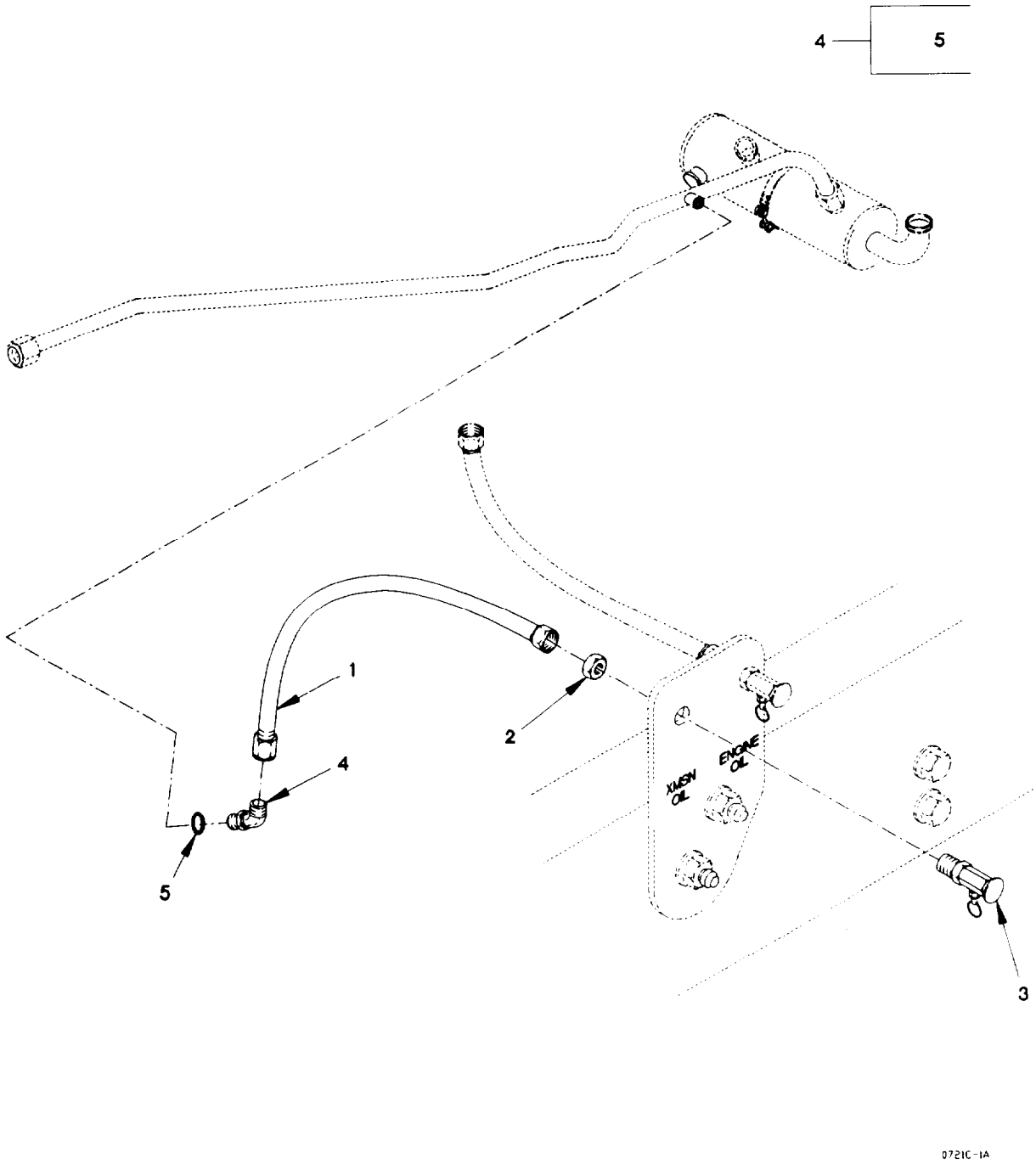

Figure 126. Transmission Oil Sampling Valve

(1) ITEM NO	(2) SMR CODE	(3) FSCM	(4) PART NUMBER	(5) DESCRIPTION AND USABLE ON CODE (UOC)	(6) QTY
				GROUP 0721: COOLERS, PUMPS, MOTORS FIG. 126 TRANSMISSION OIL SAMPLING VALVE	
1	PAOZZ	0FW39	12418004-001	HOSE ASSEMBLY, NONME	1
1	PAOZZ	0FW39	12418004-002	HOSE ASSEMBLY, NONME AOAP SAMPLING VALVE (USED WITH HOSE ASSEMBLY ONLY)	1
2	PAOZZ	81343	4-070118C	RING, EXTERNALLY THR	1
3	PAOZZ	0FW39	12414643	SLEEVE, DIRECTIONAL	1
4	PAOZZ	81343	4-4 070320C	ELBOW, TUBE TO BOSS	1
5	PAOZZ	81343	J515-4-1	.O-RING	1
				END OF FIGURE	

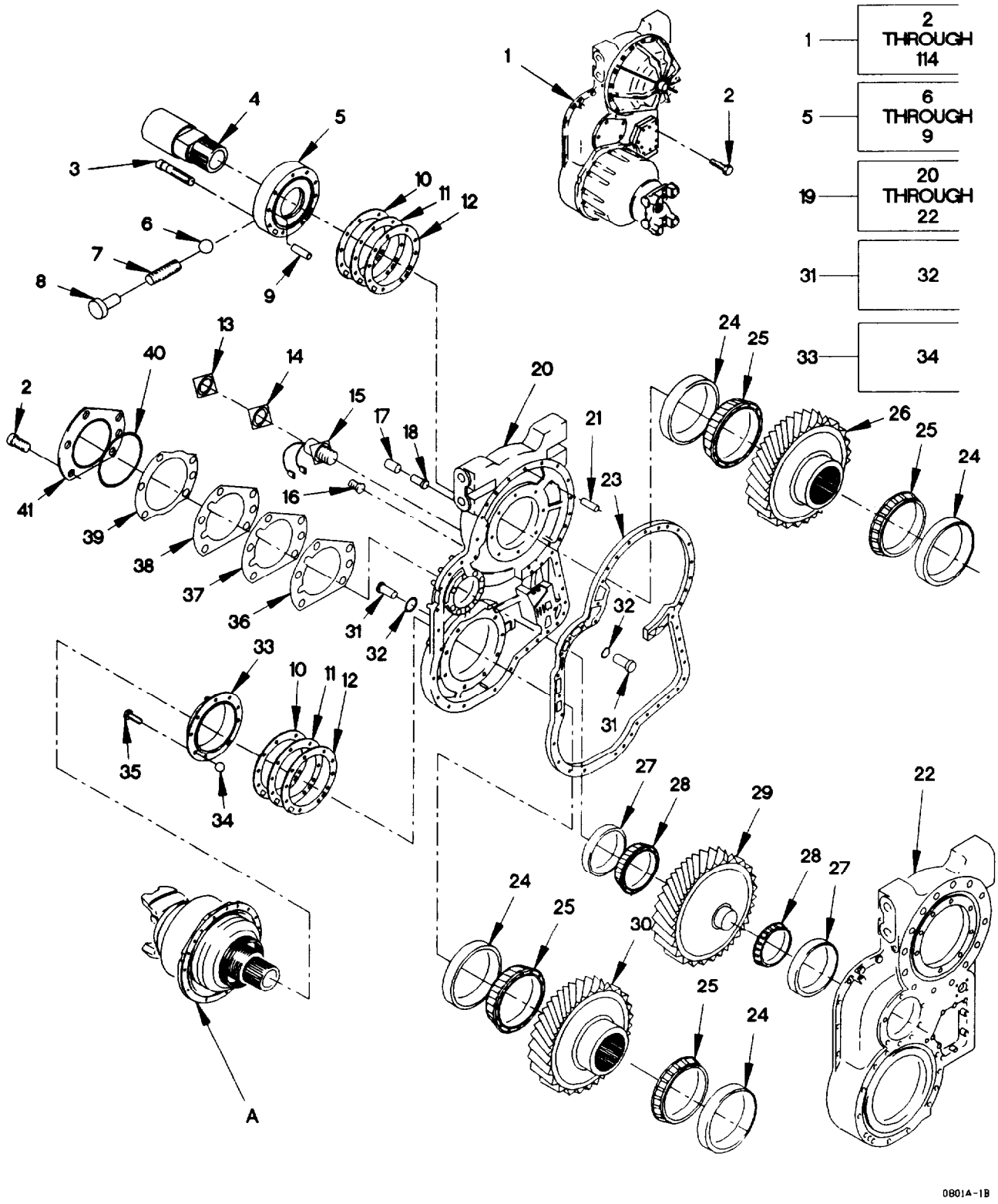

Figure 127. Transfer Case Module (Sheet 1 of 4)

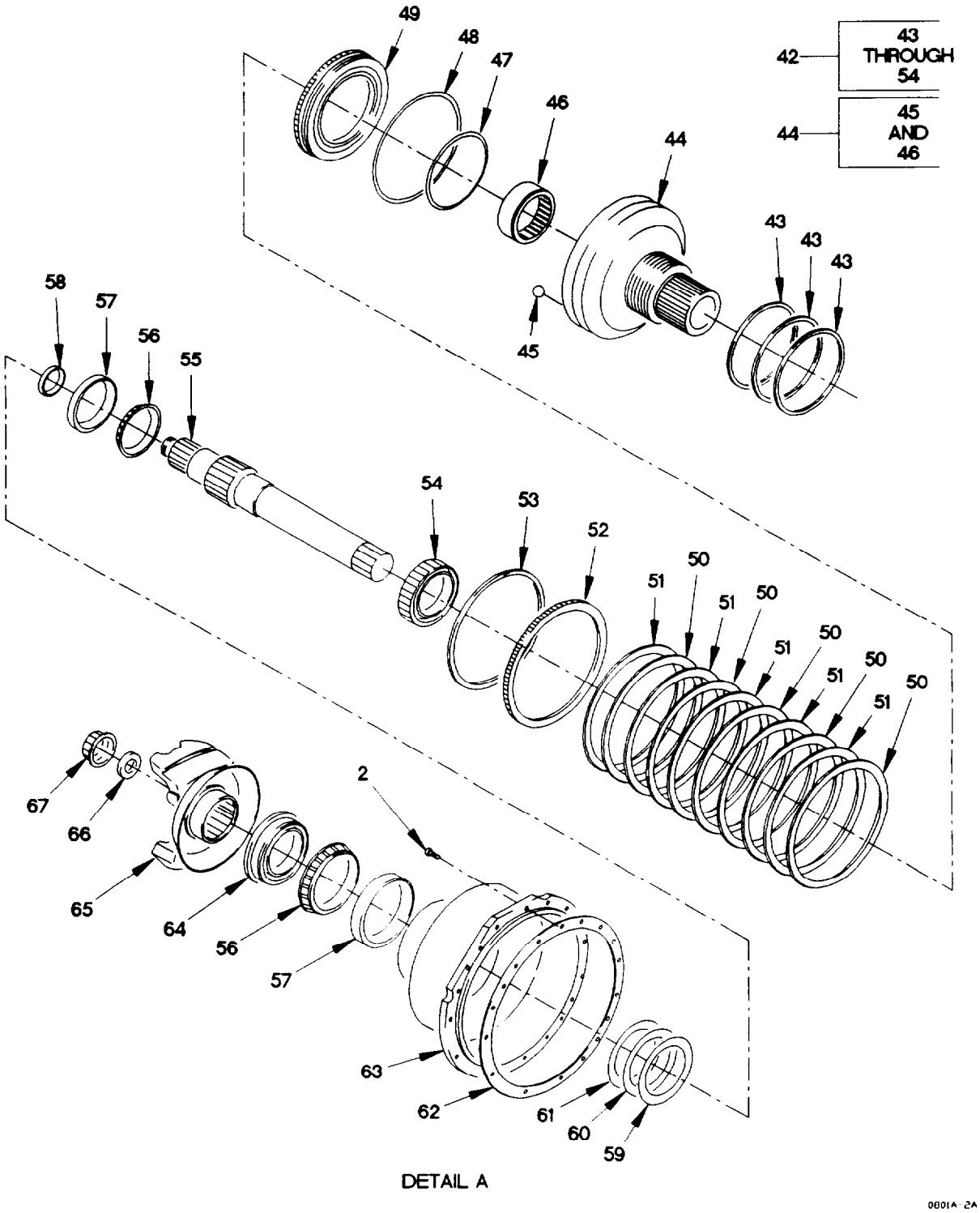

Figure 127. Transfer Case Module (Sheet 2 of 4)

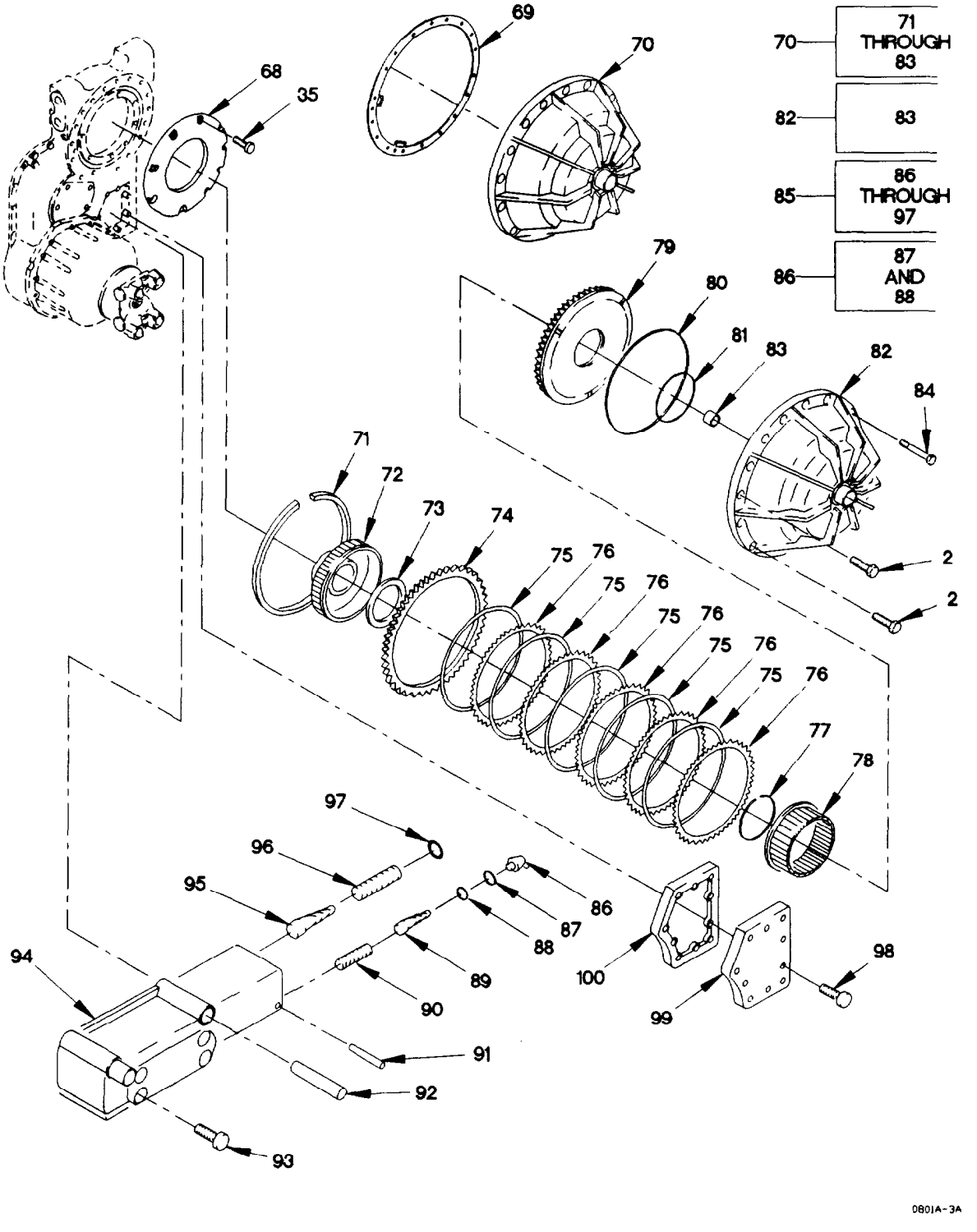

Figure 127. Transfer Case Module (Sheet 3 of 4)

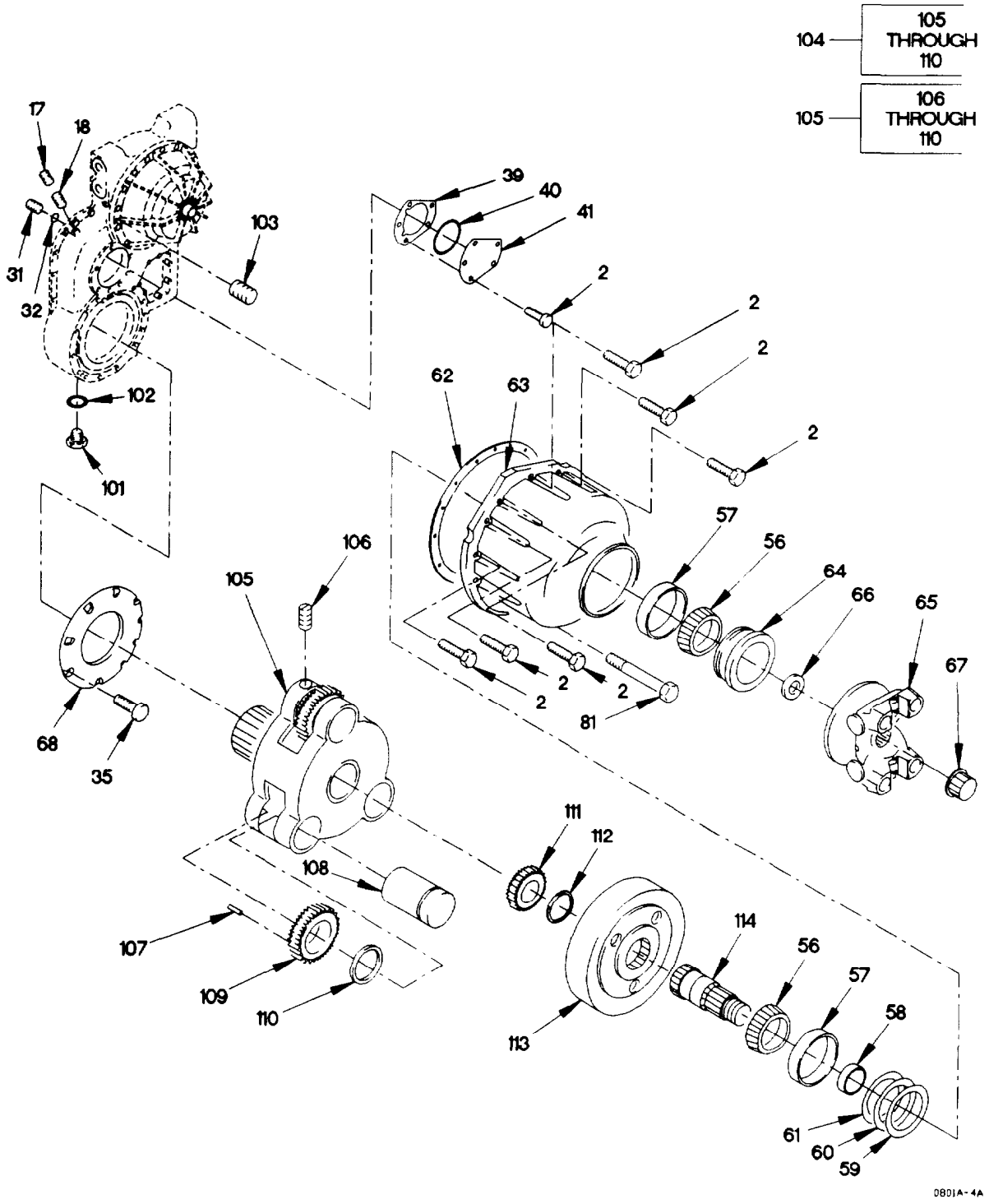

Figure 127. Transfer Case Module (Sheet 4 of 4)

(1) ITEM NO	(2) SMR CODE	(3) FSCM	(4) PART NUMBER	(5) DESCRIPTION AND USABLE ON CODE (UOC)	(6) QTY
				GROUP 0801: POWER TRANSFER, FINAL DRIVE ASSEMBLIES	
				FIG. 127 TRANSFER CASE MODULE	
1	AHHHH	73342	29506339	TRANSFER CASE MOD	1
2	PAHZZ	56161	10503407	.SCREW, CAP, HEXAGON H M10 X 1.5 X 40	48
3	PAHZZ	81495	071 310 24	.SCREW, CAP, HEXAGON H M10 X 1.5 X 55	8
4	PAHZZ	73342	29507842	.EXTENSION SHAFT	1
5	PAHHH	73342	29507831	.PUMP SUBASSEMBLY, RO	1
6	PAHZZ	73342	29506355	. .VALVE, CHECK	1
7	PAHZZ	73342	29508115	. .SPRING, HELICAL, COMP	1
8	PAHZZ	73342	29508116	. .STOP, MECHANICAL	1
9	PAHZZ	73342	29508117	. .PIN, GROOVED, HEADLES	2
10	PAHZZ	73342	29502105	.SHIM 0.254 MM	2
11	PAHZZ	73342	29502106	.SHIM 0.127 MM	2
12	PAHZZ	73342	2952107	.SHIM 0.076 MM	2
13	PAHZZ	73342	29506354	.PLATE, RETAINING, ELE	1
14	PAHZZ	73342	29506352	.GASKET	1
15	PAHZZ	73342	29506351	.CONNECTOR, PLUG, ELEC	1
16	PAHZZ	56161	10501759	.SCREW, CAP, HEXAGON H M8 X 1.25 X 25	4
17	PAHZZ	73342	29506239	.PLUG, PIPE	2
18	PAHZZ	73342	29506240	.FITTING, LUBRICATION	2
19	PAHHH	73342	29506340	.HOUSING, MECHANICAL	1
20	XAHZZ	73342	29506341	. .HOUSING, XFR CASE	1
21	PAHZZ	73342	29506344	. .PIN, STRAIGHT, HEADLE	2
22	XAHZZ	73342	29506342	. .COVER, TRANSFER CASE	1
23	PAHZZ	73342	29506210	.GASKET	1
24	PAHZZ	73342	29502109	.CUP, TAPERED ROLLER	4
25	PAHZZ	73342	29502110	.CONE, TAPERED ROLLER	4
26	PAHZZ	73342	29506345	.GEAR, HELICAL	1
27	PAHZZ	73342	29502114	.CUP, TAPERED ROLLER	2
28	PAHZZ	73342	29502115	.CONE, TAPERED ROLLER	2
29	PAHZZ	73342	29506346	.GEAR, ANTIBACKLASH, B	1
30	PAHZZ	73342	29506347	.GEAR, BEVEL	1
31	PAOZZ	73342	29500034	.PLUG, MACHINE THREAD	3
32	PAOZZ	73342	23043446	. .O-RING	3
33	PAHHH	73342	29506245	.HOUSING, MECHANICAL	1
34	PAHZZ	73342	29502167	. .BALL, BEARING 0.218 DIA	2
35	PAHZZ	72582	11500725	.SCREW, CAP, HEXAGON H M10 X 1.50 X 35	24
36	PAHZZ	73342	29506211	.GASKET	1
37	PAHZZ	73342	29506220	.SHIM 0.076 MM (0.003 IN)	1
38	PAHZZ	73342	29506219	.SHIM 0.127 MM (0.005 IN)	1
39	PAHZZ	73342	29506218	.SHIM 0.254 MM (0.010 IN)	1
40	PAHZZ	73342	29506215	.WASHER, SEAL	2
41	PAHZZ	73342	29506229	.COVER, ACCESS	2

(1) ITEM NO	(2) SMR CODE	(3) FSCM	(4) PART NUMBER	(5) DESCRIPTION AND USABLE ON CODE (UOC)	(6) QTY
42	AHHHH	73342	29507832	.HOUSING ASSY, C7	1
43	PAHZZ	73342	29506399	. .SEAL RING, METAL	3
44	PAHZZ	73342	29507833	. .HOUSING, MECHANICAL	1
45	PAHZZ	73342	29506358	. . .BALL, BEARING 0.250 DIA	1
46	PAHZZ	73342	29506228	. . .BUSHING, SLEEVE	1
47	PAHZZ	73342	29502161	. .RING, RETAINING INTERNAL	1
48	PAHZZ	73342	29502164	. .RING, RETAINING EXTERNAL	1
49	PAHZZ	73342	29502153	. .SPACER, RING	1
50	PAHZZ	73342	29502156	. . LINING, FRICTION C7 REACTION	5
51	PAHZZ	73342	23042198	. .DISK, CLUTCH C7 FRICTION	5
52	PAHZZ	73342	29508167	. .SPACER, RING	1
53	PAHZZ	73342	29506217	. .RING, RETAINING	1
54	PAHZZ	73342	29506226	. .WASHER, SEAL	1
55	PAHZZ	73342	29506362	.SHAFT, SHOULDERED	1
56	PAHZZ	73342	29506361	.CONE, TAPERED ROLLER	4
57	PAHZZ	73342	29506360	.CUP, TAPERED ROLLER	4
58	PAHZZ	73342	29506231	.SPACER, RING	2
59	PAHZZ	73342	29505947	.SHIM 0.076 MM	2
60	PAHZZ	73342	29505948	.SHIM 0.127 MM	2
61	PAHZZ	73342	29505949	.SHIM 0.254 MM	2
62	PAHZZ	73342	29506213	.GASKET	2
63	PAHZZ	73342	29506359	.HOUSING, MECHANICAL	2
64	PAHZZ	73342	29515690	.SEAL, PLAIN	2
65	PAHZZ	73342	29503174	.YOKE, UNIVERSAL JOIN 16 TYS	2
66	PAHZZ	73342	29507835	.RING, RETAINING	2
67	PAHZZ	73342	29507834	.NUT, SELF-LOCKING, HE	2
68	PAHZZ	73342	29506244	.HOUSING, BEARING UNI	2
69	PAHZZ	73342	29503185	.GASKET	1
70	AHHHH	73342	29505639	.HOUSING ASSY, C6	1
71	PAHZZ	73342	29501192	. .RING, RETAINING	1
72	PAHZZ	73342	29506075	. .GEAR, SPUR	1
73	PAHZZ	73342	23015799	. .RING, BEARING, INNER	1
74	PAHZZ	73342	29506074	. .DISK, CLUTCH	1
75	PAHZZ	73342	23048735	. .DISK, CLUTCH	5
76	PAHZZ	73342	29506073	. .DISK, CLUTCH	5
77	PAHZZ	73342	29501195	. .RING, RETAINING	1
78	PAHZZ	73342	29501191	. .RING, RETAINING	1
79	PAHZZ	73342	29506072	. .RING, RETAINING	1
80	PAHZZ	73342	29501189	. .SEAL RING, METAL	1
81	PAHZZ	73342	29501190	. .SEAL RING, METAL	1
82	PAHHH	73342	29506068	. .HOUSING, MECHANICAL	1
83	PAHZZ	73342	29501026	. . .BUSHING, SLEEVE	1
84	PAHZZ	75755	19M7668	.SCREW, CAP, HEXAGON H M10 X 1.5 X 100	24
85	AFFFF	73342	29508168	.VALVE BODY ASSY, CON	1
86	PAFFF	73342	29500888	. .SOLENOID, ELECTRICAL	1
87	PAFZZ	73342	29503380	. . .O-RING	1
88	PAFZZ	73342	29503382	. . .O-RING	1
89	PAFZZ	73342	29503564	. .VALVE, SOLENOID	1

(1) ITEM NO	(2) SMR CODE	(3) FSCM	(4) PART NUMBER	(5) DESCRIPTION AND USABLE ON CODE (UOC)	(6) QTY
90	PAFZZ	73342	29502195	. .SPRING, HELICAL, COMP 6MM X 1.0 X 20 LG	1
91	PAFZZ	73342	29502194	. .FILTER ELEMENT, FLUI	1
92	PAFZZ	73342	29500873	. .PIN, STRAIGHT, HEADLE	1
93	PAFZZ	56161	10501380	. .SCREW, CAP, HEXAGON H M8 X 1.25 X 50	6
94	PAFZZ	73342	29506243	. .CONTROL ASSEMBLY, GA	1
95	PAFZZ	73342	29500870	. .VALVE, RESTRICTOR CH	1
96	PAFZZ	73342	29500871	. .SPRING, HELICAL, COMP	1
97	PAFZZ	73342	29500872	. .STOP, MECHANICAL	1
98	PAFZZ	56161	10501882	.SCREW, CAP, HEXAGON H M8 X 1.25 X 30	10
99	PAFZZ	73342	29506230	.COVER, ACCESS	1
100	PAFZZ	73342	29506212	.GASKET	1
101	PAOZZ	73342	29503360	.PLUG, MACHINE THREAD	1
102	PAOZZ	73342	23019664	.O-RING	1
103	PAHZZ	73342	29506241	.RESTRICTOR, FLUID FL 5MM	1
104	AHHHH	73342	29507836	.CARRIER ASSY, P4	1
105	PAHHH	73342	29507837	. .CARRIER, GEAR ASSEMB	1
106	PAHZZ	73342	29506222	. . .SETSCREW	3
107	PAHZZ	73342	29506224	. . .ROLLER, BEARING	54
108	PAHZZ	73342	29507838	. . .SHAFT, STRAIGHT	3
109	PAHZZ	73342	29507839	. . . GEAR, SPUR	3
110	PAHZZ	73342	29506223	. . .BEARING, WASHER, THRU	6
111	PAHZZ	73342	29507841	.GEAR, SPUR 25T	1
112	PAHZZ	73342	29502141	.RING, RETAINING	1
113	PAHZZ	73342	29506370	.GEAR, INTERNAL 59T	1
114	PAHZZ	73342	29508166	.SHAFT, SHOULDERED	1

END OF FIGURE

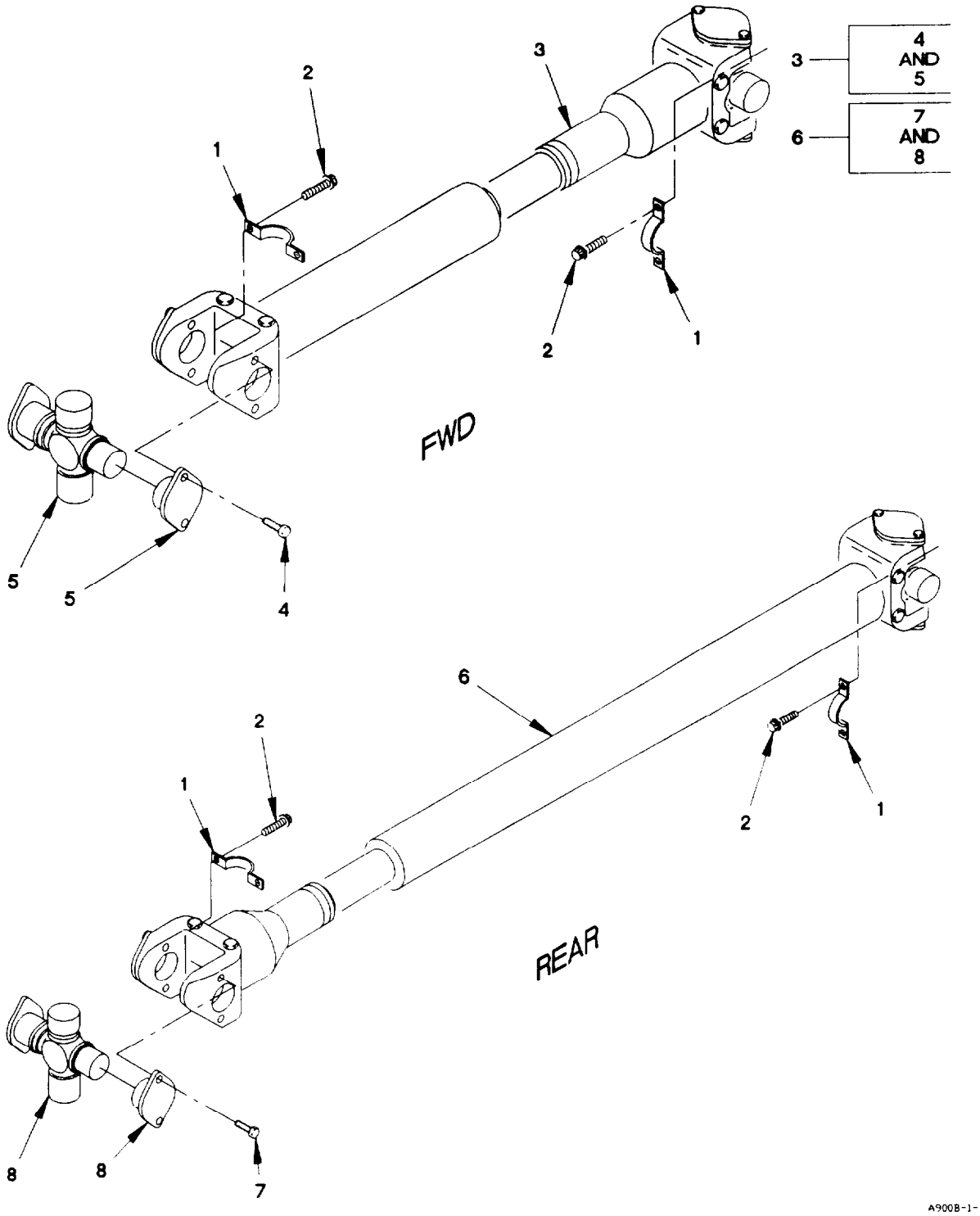

Figure 128. Driveshafts

(1) ITEM NO	(2) SMR CODE	(3) FSCM	(4) PART NUMBER	(5) DESCRIPTION AND USABLE ON CODE (UOC)	(6) QTY
				GROUP 0900: PROPELLER SHAFTS FIG. 128 DRIVESHAFTS	
1	PAOZZ	78500	REBC16S	STRAP, RETAINING PART OF KIT P/N KT-16SB, R674X	8
2	KFOZZ	78500	SP-1013	SCREW, CAP, HEXAGON H PART OF KIT P/N KT-16SB, R674X	16
3	PAOOO	78500	983-92-49-496	DRIVE SHAFT ASSEMBL	1
4	KFOZZ	7850	CSH5-24-38	.SCREW, CAP, HEXAGON H 5/16-24 X 5/8 PART OF KIT P/N R674X	8
5	KFFZZ	78500	216N14-5A	.CENTER PARTS PART OF KIT P/N R674X	1
6	PAOOO	78500	983-92-49-502	DRIVE SHAFT ASSEMBL	1
7	KFOZZ	78500	CSH5-24-38	.SCREW, CAP, HEXAGON H 5/16-24 X 5/8 PART OF KIT P/N R674X	8
8	KFFZZ	78500	216N14-5A	.CENTER PARTS PART OF KIT P/N R674X	1
				END OF FIGURE	

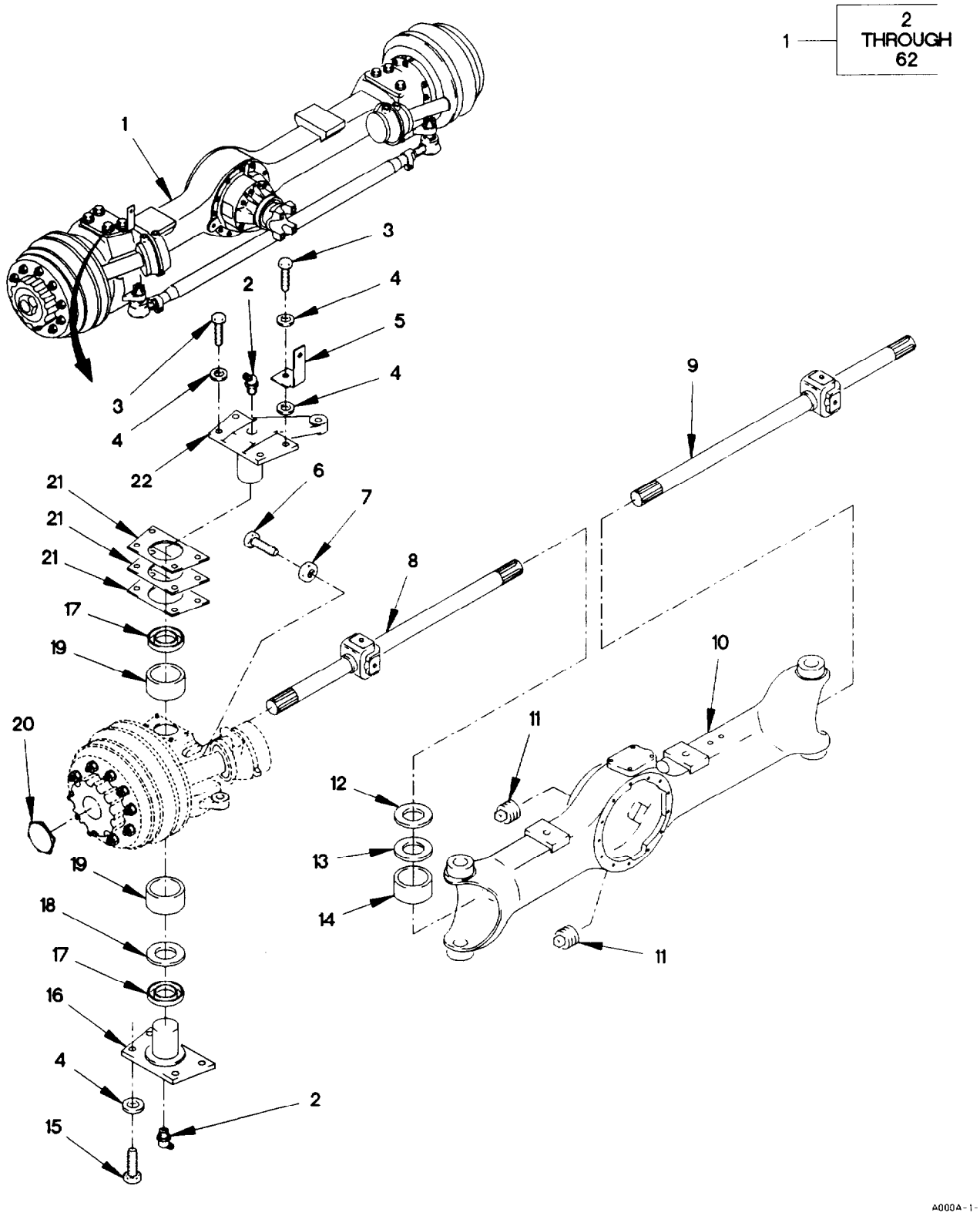

Figure 129. Front Axle and Wheel End Assembly (Sheet 1 of 2)

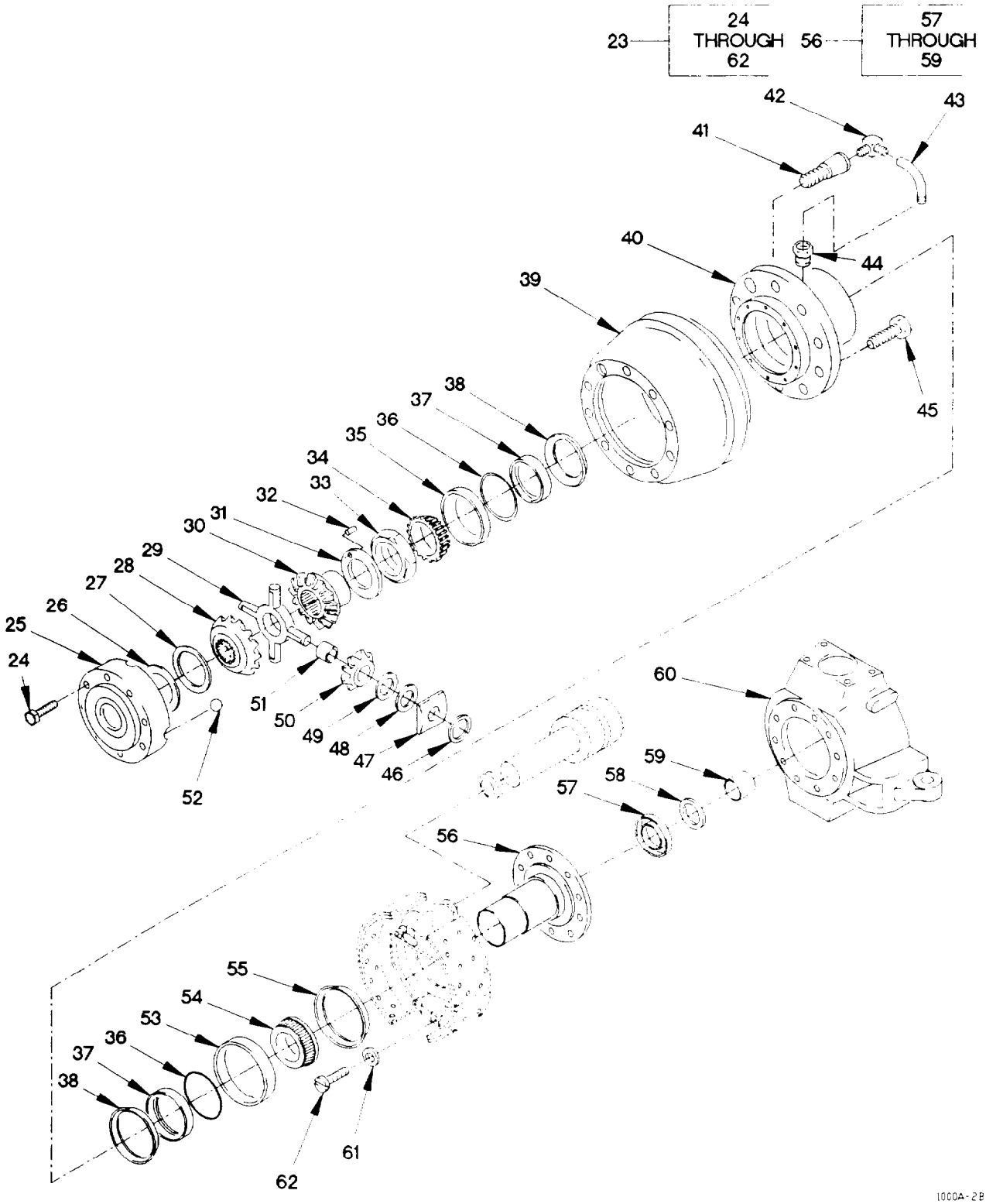

Figure 129. Front Axle and Wheel End Assembly (Sheet 2 of 2)

(1) ITEM NO	(2) SMR CODE	(3) FSCM	(4) PART NUMBER	(5) DESCRIPTION AND USABLE ON CODE (UOC)		(6) QTY
				GROUP 1000: FRONT AXLE ASSEMBLY FIG. 129 FRONT AXLE AND WHEEL END ASSEMBLY		
1	PAFHH	78500	RF-12611-NFSF-7-780	AXLE ASSEMBLY, AUTOM		1
2	PAFZZ	78500	1199-B-3226	.FITTING, LUBRICATION PART OF KIT P/N 4706		4
3	PAFZZ	78500	S-21418-A-2	.SCREW, CAP, HEXAGON H PART OF KIT P/N 4706		4
4	PAFZZ	78500	1229-M-1625	.WASHER, FLAT PART OF KIT P/N 4706		18
5	PAFZZ	19207	12420331	.BRACKET, ANGLE		2
6	PAFZZ	78500	26X1024	.SCREW, CAP, HEXAGON H		2
7	PAFZZ	96906	MS51967-17	.NUT, PLAIN, HEXAGON 9/16-12		2
8	PAFZZ	78500	A2-3202-A-9621	.UNIVERSAL JOINT, VEH		1
9	PAFZZ	78500	A3-3203-A-9621	.UNIVERSAL JOINT, VEH		1
10	XAFZZ	78500	C2301Q7895	.HOUSING, MECHANICAL		1
11	PAFZZ	78500	1250-E-473	.PLUG, MACHINE THREAD DRAIN PLUG		1
12	PAFZZ	78500	A-1205-D-2344	.SEAL, PLAIN ENCASED		2
13	PAFZZ	78500	1229-T-4570	.BEARING, WASHER, THRU		2
14	PAFZZ	78500	1225K817	.BUSHING, SLEEVE		2
15	PAFZZ	78500	S-21416-A-2	.SCREW, CAP, SOCKET HE PART OF KIT P/N 4706		12
16	PAFZZ	78500	3262W1219	COVER, ACCESS		3
17	PAFZZ	78500	1205F2164	.SEAL, NONMETALLIC RO PART OF KIT P/N 4706		4
18	PAFZZ	78500	1229K4119	.BEARING, WASHER, THRU PART OF KIT P/N 4706		2
19	PAFZZ	78500	1225K1259	.BEARING, WASHER, THRU		2
20	PAOZZ	78500	1250T1086	.CAP, GREASE		2
21	PAFZZ	78500	2203Q9845	.SHIM .003 IN (.076MM) PART OF KIT P/N 4706		1
21	PAFZZ	78500	2203R9846	.SHIM .005 IN (.127MM) PART OF KIT P/N 4706		1
21	PAFZZ	78500	2203S9847	.SHIM .010 IN (.254MM) PART OF KIT P/N 4706		1
22	PAFZZ	78500	3133B7178	.ARM, PIVOTING WHEEL		1
23	AOOFF	78500	A3333J4118	.WHEEL END ASSY LEFT HAND SIDE		1
23	AOOFF	78500	A3333J4118	.WHEEL END ASSY RIGHT HAND SIDE		1
24	PAOZZ	78500	10X1563	. .SCREW, CAP, HEXAGON H		12
25	PAOZZ	78500	3266-A-1275	. .COVER, ACCESS		1
26	PAOZZ	78500	1229A4161	. .BEARING, WASHER, THRU		1
27	PAOZZ	78500	1228J1154	. .BEARING, WASHER, THRU		1
28	PAOZZ	78500	2234F1202	. .GEAR, BEVEL		1
29	KFOZZ	78500	3278Z1118	. .SPIDER, DIFFERENTIAL		1
30	PAOZZ	78500	2234E1201	. .GEAR, BEVEL		1
31	PAOZZ	78500	2203J9500	. .SHIM PART OF KIT P/N 4715, 4726	V	
31	PAOZZ	78500	2203K9501	. .SHIM PART OF KIT P/N 4726	V	

(1) ITEM NO	(2) SMR CODE	(3) FSCM	(4) PART NUMBER	(5) DESCRIPTION AND USABLE ON CODE (UOC)	(6) QTY
31	PAOZZ	78500	2203L9502	. .SHIM PART OF KIT P/N 4726	V
31	PAOZZ	78500	2203M9503	. .SHIM PART OF KIT P/N 4726	V
31	PAOZZ	78500	2203N9504	. .SHIM PART OF KIT P/N 4726	V
32	PAOZZ	78500	19X1067	. .PIN, STRAIGHT, HEADLE	2
33	PAOZZ	78500	A1227X1480	. .RETAINER, PACKING (WHEEL BEARING NUT)	1
34	PAOZZ	60038	47686	. .CONE AND ROLLERS, TA	1
35	PAOZZ	61220	47620	. .CUP, TAPERED ROLLER	1
36	PAOZZ	78500	1229K3131	. .RING , RETAINING	2
37	PAOZZ	78500	2297R6648	. .SEAL, PLAIN	2
38	PAOZZ	78500	A1205Q2435	. .SEAL ASSY, CTIS PART OF KIT P/N 4726	2
39	PAOZZ	78500	3219-W-4833	. .BRAKE DRUM	1
40	KFOZZ	78500	A-333-J-4118	. .HUB, WHEEL END ASSY RIGHT HAND	1
41	PAOZZ	78500	20X2123	. .SCREW, MACHINE (RH) PART OF KIT P/N 4727	1
41	PAOZZ	78500	20X2122	. .SCREW, MACHINE (LH) PART OF KIT P/N 4727	1
42	PAOZZ	78500	2206D1018	. .ELBOW, BOSS	1
43	PAOZZ	78500	A-3196-D-1070	. .TUBE ASSEMBLY, METAL	1
44	PAOZZ	60038	2297P3838	. .SEAT, TUBE	1
45	PAOZZ	78500	20X1577	. .BOLT, FIREBRICK ANCH LEFT SIDE PART OF P/N 4727	9
45	PAOZZ	78500	20X1578	. .BOLT, FINNED NECK RIGHT SIDE PART OF KIT P/N 4727	
46	PAOZZ	78500	5-X-1155	. .O-RING	4
47	PAOZZ	78500	1229W4157	. .BEARING, WASHER, THRU	4
48	PAOZZ	78500	1228K1155	. .BEARING, WASHER, THRU	4
49	PAOZZ	78500	1229Z4160	. .BEARING, WASHER, THRU	4
50	PAOZZ	78500	2233J1102	. .GEAR, BEVEL	4
51	PAOZZ	78500	1228H1152	. .BEARING, WASHER, THRU	4
52	PAOZZ	78500	1850T 124	. .PLUG, PIPE, MAGNETIC	1
53	PAOZZ	60038	JM716610	. .CUP, TAPERED ROLLER	1
54	PAOZZ	60038	KM716649	. .CONE AND ROLLERS, TA	1
55	PAOZZ	78500	A-1205-R-2254	. .SEAL, PLAIN ENCASED	1
56	PAFFF	78500	A-3213-P-1758	. .SPINDLE, MECHANICALL	1
57	PAFZZ	78500	A-1205-D-2344	. . .SEAL, PLAIN ENCASED	1
58	PAFZZ	78500	1229-T-4570	. . .BEARING, WASHER, THRU	1
59	PAFZZ	78500	1225K817	. . .BUSHING, SLEEVE	1
60	PAFZZ	78500	3111D3254	. .SPINDLE, WHEEL, DRIVI	1
60	PAFZZ	78500	3111E3255	. .SPINDLE, WHEEL, DRIVI	1
61	PAFZZ	78500	1229-Y-1507	. .WASHER, FLAT	10
62	PAFZZ	78500	S2922A2	. .SCREW, CAP, HEXAGON H	10

END OF FIGURE

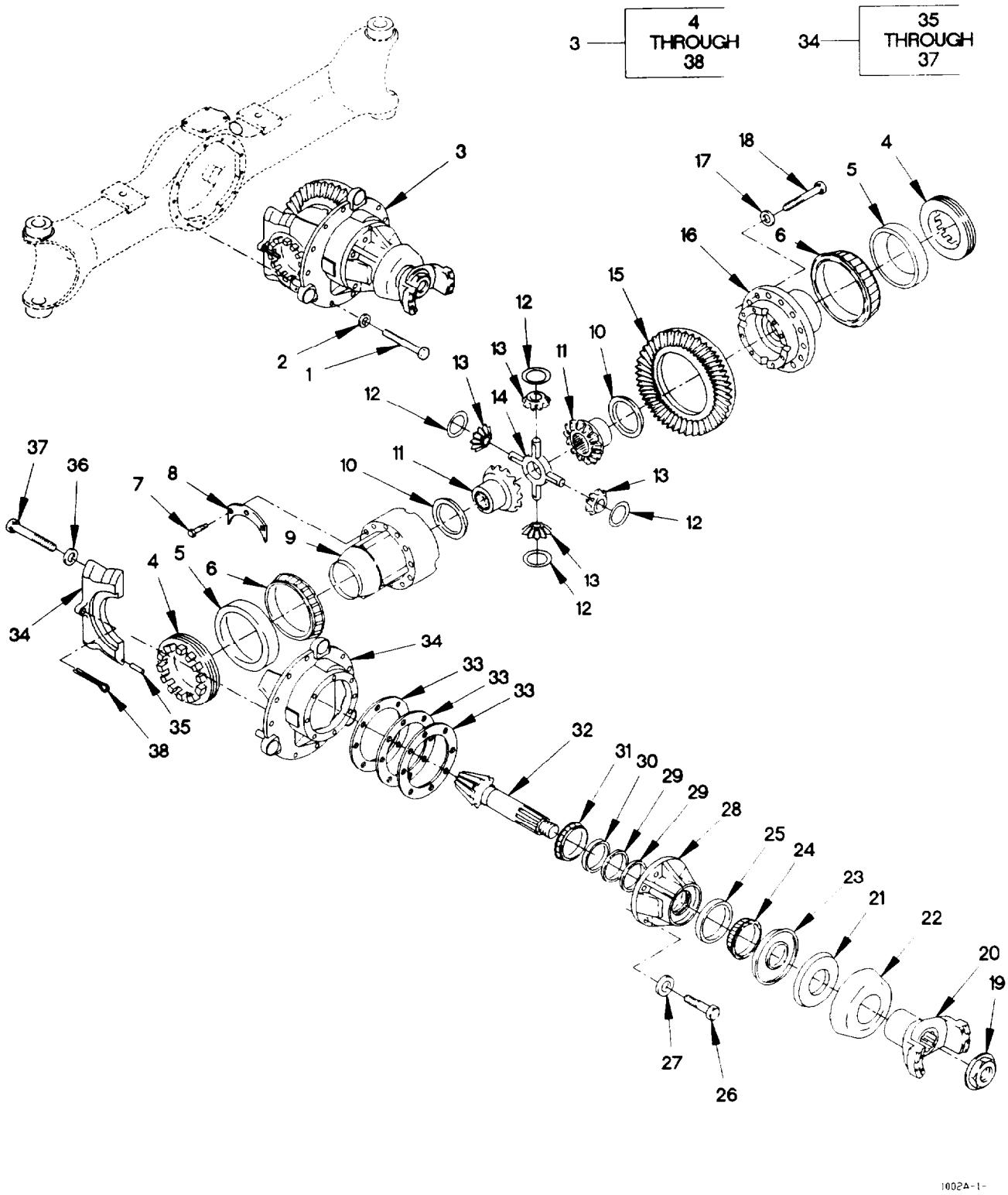

Figure 130. Front Differential Carrier

(1) ITEM NO	(2) SMR CODE	(3) FSCM	(4) PART NUMBER	(5) DESCRIPTION AND USABLE ON CODE (UOC)		(6) QTY
				GROUP 1002: DIFFERENTIAL		
				FIG. 130 FRONT DIFFERENTIAL CARRIER		
1	PAFZZ	78500	MS212035-2-A	SCREW, CAP, HEXAGON H		12
2	PAFZZ	78500	1229-C-1511	WASHER, FLAT		12
3	PAFHH	78500	A-3200-W-1869	DIFFERENTIAL, DRIVIN		1
4	PAHZZ	78500	2214H1100	.BEARING, ROLLER, CYLI		2
5	PAHZZ	60038	29620	.CUP, TAPERED ROLLER		2
6	PAHZZ	60038	29685	.CONE AND ROLLERS, TA		2
7	PAHZZ	78500	MS212080-2	.BOLT, MACHINE		12
8	PAHZZ	78500	42X1409	.SPACER, PLATE		4
9	PAHZZ	78500	3235F2164	.HOUSING, MECHANICAL		1
10	PAHZZ	78500	1229X4106	.BEARING, WASHER, THRU		2
11	PAHZZ	78500	2234Q1265	.GEAR, BEVEL		2
12	PAHZZ	78500	1229L4276	.BEARING, WASHER, THRU		4
13	PAHZZ	78500	2233E1123	.GEAR, BEVEL		4
14	PAHZZ	78500	3278X1116	.SPIDER, DIFFERENTIAL		1
15	KFHZZ	78500	41102K2-1.95	.AMBOID PINION DRIVE PART OF KIT P/N		1
				4721		
16	PAHZZ	78500	3235H2166	.HUB, BODY		
17	PAHZZ	78500	1229-C-1511	.WASHER, FLAT		1
18	KFHZZ	78500	MS212035-2-A	.SCREW, CAP, HEXAGON H		16
19	KFFZZ	78500	40-X-1241	.NUT, SELF-LOCKING, HE PART OF KIT P/N		16
				KIT4710		1
20	PFFZZ	78500	A33260F1280	.YOKE, UNIVERSAL JOIN		
21	PAFZZ	78500	A-1205-F-2502	.SEAL, PLAIN ENCASED PART OF KIT P/N		1
				4724		1
22	PAFZZ	78500	2297N3888	.DEFLECTOR, DIRT AND PART OF KIT P/N		
				KIT4710		1
23	PAFZZ	78500	A1205U2257	.SEAL, PLAIN ENCASED PART OF KIT P/N		
				KIT4710		1
24	PAHZZ	78500	66589	.CONE AND ROLLERS, TA		
25	PAHZZ	78500	66520	.CUP, TAPERED ROLLER		1
26	PAHZZ	78500	MS210035-2-A	.SCREW, MACHINE		1
27	PAHZZ	78500	MWA-510	.WASHER, FLAT		8
28	PAHZZ	78500	A-3226-A-1275	.HOUSING, BEARING UNI INCLUDES CAGE		8
				P/N 3226A1275 AND CUP P/N'S		1
				HM813810 AND 65570		
29	KFHZZ	78500	2203-K-9761	.SPACER, PINION, BRG PART OF KIT P/N	V	
				4718		
29	KFHZZ	78500	2203-L-9762	.SPACER, PINION, BRG PART OF KIT P/N	V	
				4718		
29	KFHZZ	78500	2803-A-2783	.SPACER, PINION, BRG .415 IN	V	
				(10.550MM) PART OF KIT P/N 4718		
29	KFHZZ	78500	2803-B-2784	.SPACER, PINION, BRG .416 IN	V	
				(10.575MM) PART OF KIT P/N 4718		
29	KFHZZ	78500	2803-C-2785	.SPACER, PINION, BRG .416 IN	V	
				(10.600MM) PART OF KIT P/N 4718		

(1) ITEM NO	(2) SMR CODE	(3) FSCM	(4) PART NUMBER	(5) DESCRIPTION AND USABLE ON CODE (UOC)	(6) QTY
29	KFHZZ	78500	2803-D-2786	.SPACER, PINION, BRG .418 IN (10.625MM) PART OF KIT P/N 4718	V
29	KFHZZ	78500	2803-E-2787	.SPACER, PINION, BRG .419 IN (10.650MM) PART OF KIT P/N 4718	V
29	KFHZZ	78500	2803-S-2775	.SPACER, PINION, BRG .407 IN (10.350MM) PART OF KIT P/N 4718	V
29	KFHZZ	78500	2803-T-2776	.SPACER, PINION, BRG .408 IN (10.375MM) PART OF KIT P/N 4718	V
29	KFHZZ	78500	2803-U-2777	.SPACER, PINION, BRG .409 IN 10.400MM) PART OF KIT P/N 4718	V
29	KFHZZ	78500	2803-V-2778	.SPACER, PINION, BRG .410 IN (10.425MM) PART OF KIT P/N 4718	V
29	KFHZZ	78500	2803-W-2779	.SPACER, RING .411 IN (10.450MM) PART OF KIT P/N 4718	V
29	KFHZZ	78500	2803-X-2780	.SPACER, PINION, BRG .412 IN (10.475MM) PART OF KIT P/N 4718	V
29	KFHZZ	78500	2803-Y-2781	.SPACER, PINION, BRG .413 IN (10.500MM) PART OF KIT P/N 4718	V
29	KFHZZ	78500	2803-Z-2782	.SPACER, PINION, BRG .414 IN (10.525MM) PART OF KIT P/N 4718	V
30	PAHZZ	78500	HM813810	.CUP, TAPERED ROLLER	1
31	PAHZZ	78500	HM813844	.CONE AND ROLLERS, TA	1
32	KFHZZ	78500	41633K2	.AMBOID GEAR DRIVE PART OF KIT P/N 4721	1
33	KFHZZ	78500	2803-G-2763	.SPACER, PINION, BRG .003 IN (.076MM) PART OF KIT P/N 4714	V
33	KFHZZ	78500	2803-H-2764	.SPACER, PINION, BRG .005 IN (.127MM) PART OF KIT P/N 4714	V
33	KFHZZ	78500	2803-J-2766	.SPACER, PINION, BRG .010 IN (.254MM) PART OF KIT P/N 4714	V
34	PAHZZ	78500	A2-3200-W-1869	.DIFFERENTIAL, DRIVIN	1
35	PAHZZ	78500	1246D342	. .PIN, SHOULDER, HEADLE	4
36	PAHZZ	78500	1229G4401	. .WASHER, FLAT	4
37	PAHZZ	78500	41X1363	. .SCREW, CAP, HEXAGON H	4
38	PAHZZ	78500	1199R2176	.PIN, COTTER	2

END OF FIGURE

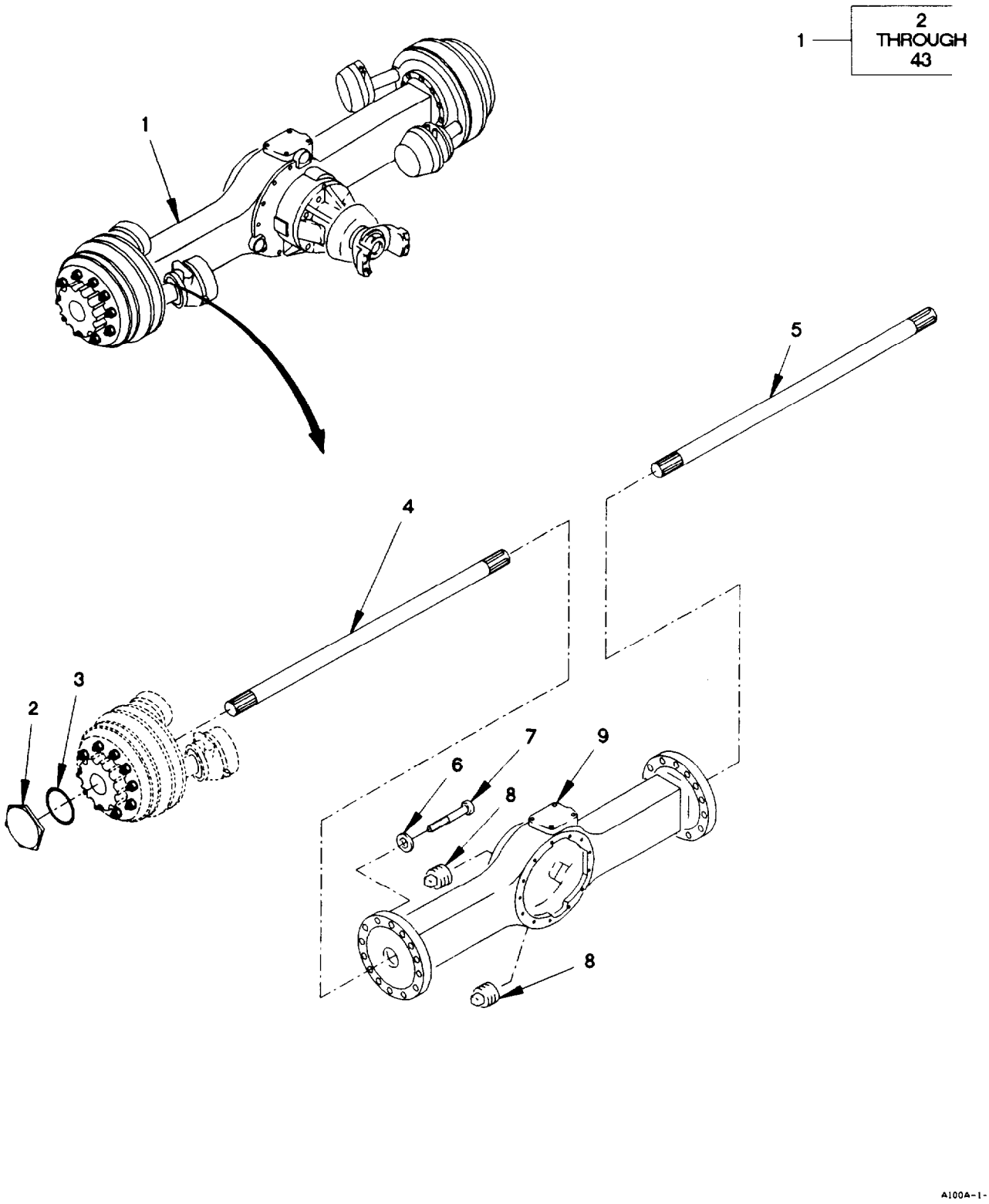

Figure 131. Rear Axle and Wheel End Assembly (Sheet 1 of 2)

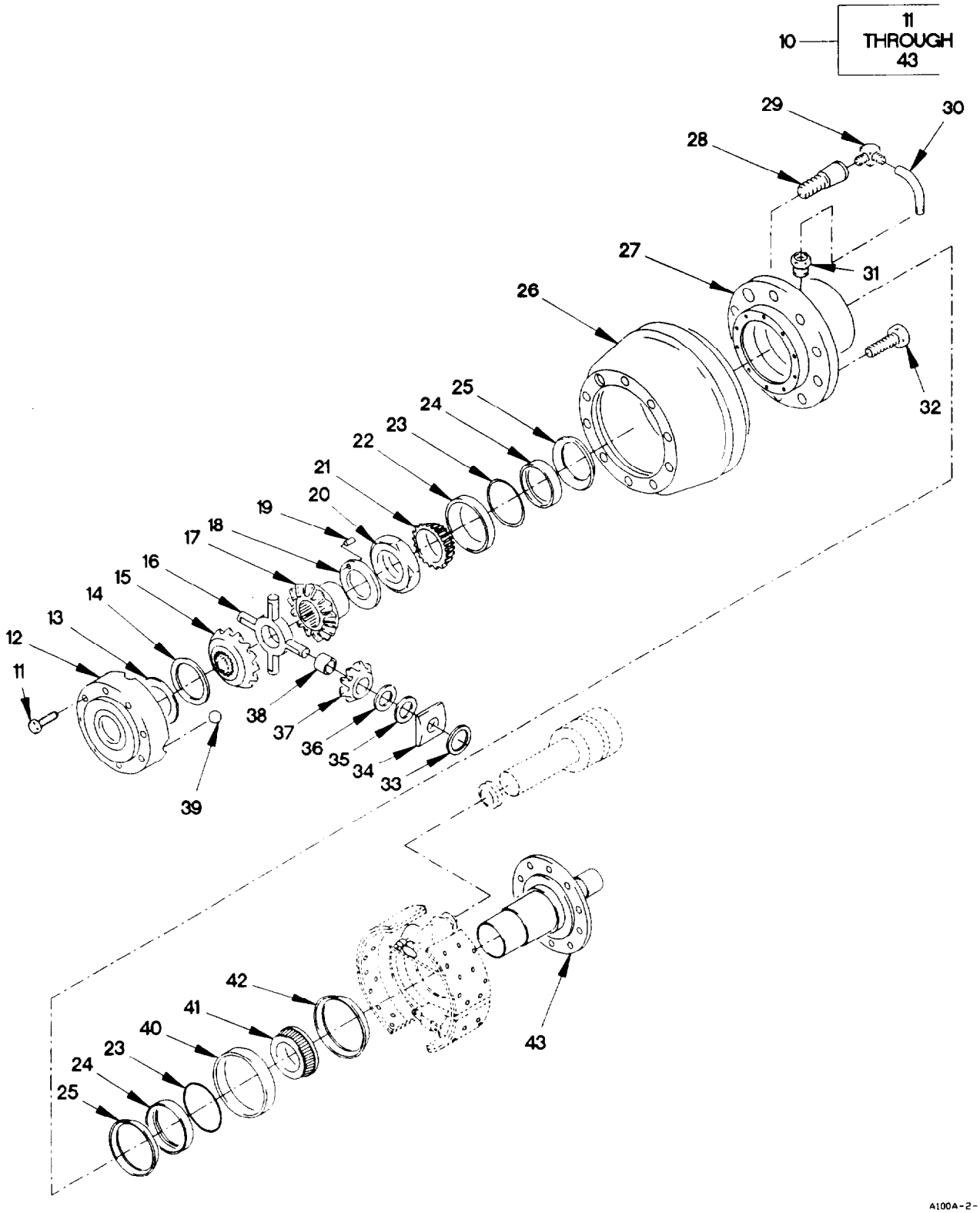

Figure 131. Rear Axle and Wheel End Assembly (Sheet 2 of 2)

(1) ITEM NO	(2) SMR CODE	(3) FSCM	(4) PART NUMBER	(5) DESCRIPTION AND USABLE ON CODE (UOC)		(6) QTY
				GROUP 1100: REAR AXLE ASSEMBLY FIG. 131 REAR AXLE AND WHEEL END ASSEMBLY		
1	PAFHH	78500	RS-15611-NFSF-4-780	AXLE ASSEMBLY, AUTOM		1
2	PAOZZ	78500	1250T1086	.CAP, GREASE		2
3	PAOZZ	78500	1229C1121	.RING, RETAINING		2
4	PAOZZ	78500	3202B9830R	.SHAFT, AXLE, AUTOMOTI		1
5	PAOZZ	78500	3202A9829L	.SHAFT, AXLE, AUTOMOTI		1
6	PAFZZ	78500	1229-Y-1507	.WASHER, FLAT PART OF KIT P/N 4707		20
7	PAFZZ	78500	S-2924-2-A	.SCREW, CAP, HEXAGON H PART OF KIT P/N 4707		20
8	PAOZZ	78500	1250-E-473	.PLUG, MACHINE THREAD		2
9	XAHZZ	78500	C73201Z7800	.HOUSING ASSY, REAR 6X6		1
10	AFFFF	78500	A5333J4118	.WHEEL END ASSY LEFT HAND SIDE		1
10	AFFFF	78500	A6333J4118	.WHEEL END ASSY RIGHT HAND SIDE		1
11	PAOZZ	78500	10X1563	. .SCREW, CAP, HEXAGON H PART OF KIT P/N 4725		12
12	PAOZZ	78500	3266-A-1275	. .COVER, ACCESS PART OF KIT P/N 4725		1
13	PAOZZ	78500	1229A4161	. .BEARING, WASHER, THRU PART OF KIT P/N 4725		1
14	PAOZZ	78500	1228J1154	. .BEARING, WASHER, THRU PART OF KIT P/N		1
13	PAOZZ	78500	1229A416160Y	. .BEARING, WASHER, THRU PART OF KIT P/N		1
15	PAOZZ	78500	2234F1202	. .GEAR, BEVEL PART OF KIT P/N 4725		1
16	KFOZZ	78500	3278Z1118	. .SPIDER, DIFFERENTIAL PART OF KIT P/N 4725		1
17	PAOZZ	78500	2234E1201	. .GEAR, BEVEL PART OF KIT P/N 4725		1
18	PAOZZ	78500	2203J9500	. .SHIM .012 IN (.30MM) PART OF KIT P/N 4715, 4726	V	
18	PAOZZ	78500	2203K9501	. .SHIM .015 IN (.38MM) PART OF KIT P/N 4715, 4726	V	
18	PAOZZ	78500	2203N9504	. .SHIM .031 IN (.79MM) PART OF KIT P/N 4715, 4726	V	
18	PAOZZ	78500	2203L9502	. .SHIM .020 IN (.51MM) PART OF KIT P/N 4715, 4726	V	
18	PAOZZ	78500	2203L9503	. .SHIM .025 IN (.64MM) PART OF KIT P/N 4715, 4726	V	
19	PAOZZ	78500	19X1067	. .PIN, STRAIGHT, HEADLE		2
20	PAOZZ	78500	A1227X1480	. .RETAINER, PACKING (WHEEL BEARING NUT)		1
21	PAOZZ	60038	47686	. .CONE AND ROLLERS, TA PART OF KIT P/N 4726		1
22	PAOZZ	61220	47620	. .CUP, TAPERED ROLLER PART OF KIT P/N 4726		1
23	PAOZZ	78500	1229K3131	. .RING, RETAINING		2

(1) ITEM NO	(2) SMR CODE	(3) FSCM	(4) PART NUMBER	(5) DESCRIPTION AND USABLE ON CODE (UOC)	(6) QTY
24	PAOZZ	78500	2297R6648	. .SEAL, PLAIN PART OF KIT P/N 4726	2
25	PAOZZ	78500	A1205Q2435	. .SEAL ASSY, CTIS PART OF KIT P/N 4726	1
26	PAOZZ	78500	3219-W-4833	. .BRAKE DRUM	1
27	KFOZZ	78500	A-333-J-4118	. .HUB, WHEEL END ASSY PART OF KIT P/N 4727	1
28	PAOZZ	78500	20X2123	. .SCREW, MACHINE	1
28	PAOZZ	78500	20X2122	. .SCREW, MACHINE	1
29	PAOZZ	78500	2206D1018	. .ELBOW, BOSS	1
30	PAOZZ	78500	A-3196-D-1070	. .TUBE ASSEMBLY, METAL	1
31	PAOZZ	60038	2297P3838	. .SEAT, TUBE	1
32	PAOZZ	78500	20X1577	. .BOLT, FIREBRICK ANCH LEFT SIDE	9
32	PAOZZ	78500	20X1578	. .BOLT, FINNED NECK RIGHT SIDE	9
33	PAOZZ	78500	5-X-1155	. .O-RING PART OF KIT P/N 4725	4
34	PAOZZ	78500	1229W4157	. .BEARING, WASHER, THRU PART OF KIT P/N 4725	4
35	PAOZZ	78500	1228K1155	. .BEARING, WASHER, THRU PART OF KIT P/N 4725	4
36	PAOZZ	78500	1229Z4160	. .BEARING, WASHER, THRU PART OF KIT P/N 4725	4
37	PAOZZ	78500	2233J1102	. .GEAR, BEVEL PART OF KIT P/N 4725	4
38	PAOZZ	78500	1228H1152	. .BEARING, WASHER, THRU PART OF KIT P/N 4725	4
39	PAOZZ	78500	1850T 124	. .PLUG, PIPE, MAGNETIC PART OF KIT P/N 4725	1
40	PAOZZ	60038	JM716610	. .CUP, TAPERED ROLLER PART OF KIT P/N 4726	1
41	PAOZZ	60038	JM716649	. .CONE AND ROLLERS, TA PART OF KIT P/N 4726	1
42	PAOZZ	78500	A-1205-R-2254	. .SEAL, PLAIN ENCASED PART OF KIT P/N 4726	1
43	PAFZZ	78500	A3213-Q-1759	. .SPINDLE, WHEEL, DRIVI	1

END OF FIGURE

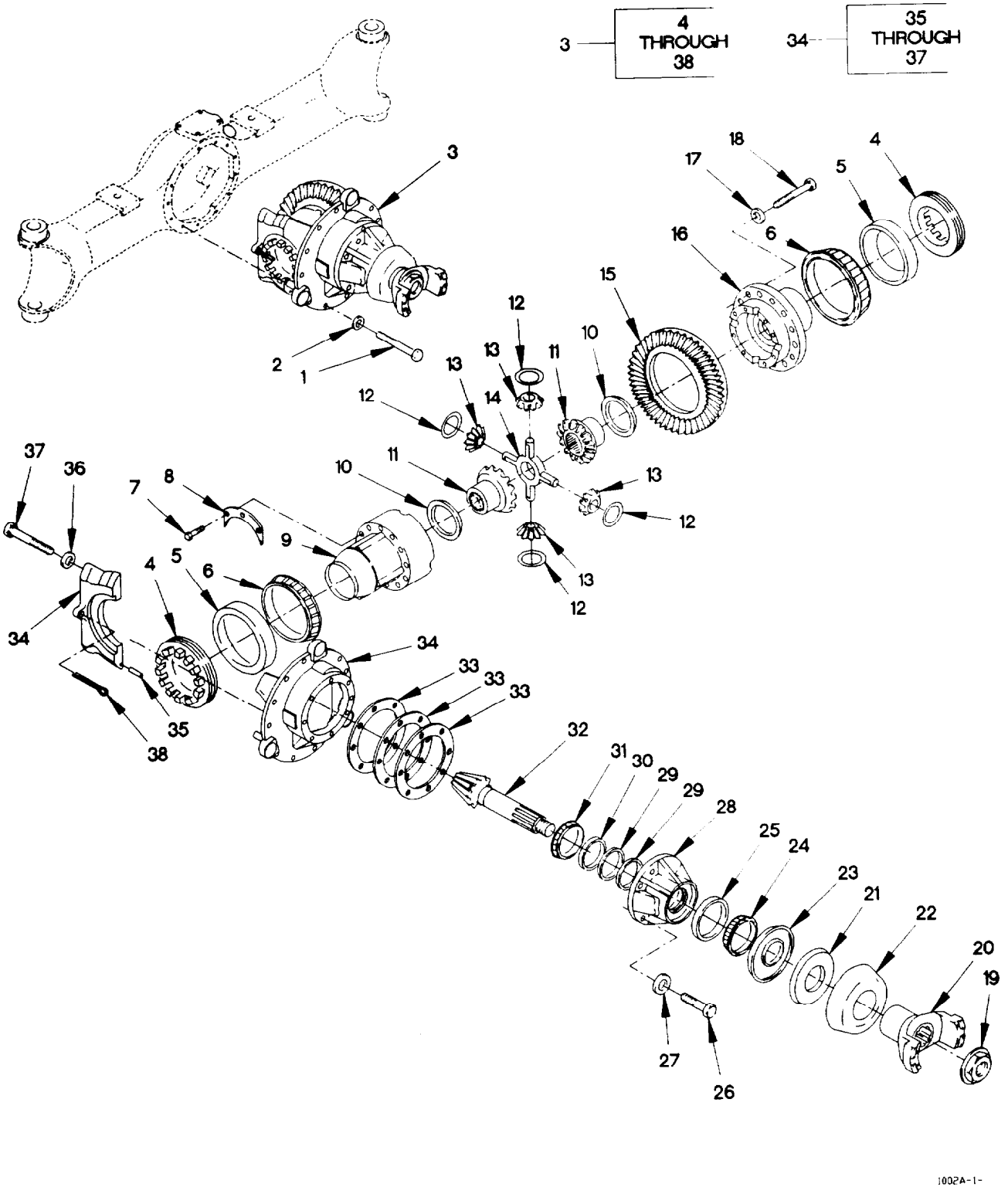

Figure 132. Rear Differential Carrier

(1) ITEM NO	(2) SMR CODE	(3) FSCM	(4) PART NUMBER	(5) DESCRIPTION AND USABLE ON CODE (UOC)		(6) QTY
				GROUP 1102: DIFFERENTIAL FIG. 132 REAR DIFFERENTIAL CARRIER		
1	KFFZZ	78500	MS212035-2-A	SCREW, CAP, HEXAGON H		12
2	PAFZZ	78500	1229-C-1511	WASHER, FLAT		12
3	PAFHH	78500	A-3200-W-1869	DIFFERENTIAL, DRIVIN		1
4	PAHZZ	78500	2214H1100	.BEARING, ROLLER, CYLI		2
5	PAHZZ	60038	29620	.CUP, TAPERED ROLLER PART OF KIT P/N 4724 4724		2
6	PAHZZ	60038	29685	.CONE AND ROLLERS, TA		2
7	PAHZZ	78500	MS212080-2	.BOLT, MACHINE		12
8	PAHZZ	78500	42X1409	.SPACER, PLATE		4
9	PAHZZ	78500	3235F2164	.HOUSING, MECHANICAL		1
10	PAHZZ	78500	1229X4106	.BEARING, WASHER, THRU		2
11	PAHZZ	78500	2234Q1265	.GEAR, BEVEL		2
12	PAHZZ	78500	1229L4276	.BEARING, WASHER, THRU		4
13	PAHZZ	78500	2233E1123	.GEAR, BEVEL		4
14	PAHZZ	78500	3278X1116	.SPIDER, DIFFERENTIAL		1
15	KFHZZ	78500	41102K2-1.95	.AMBOID PINION DRIVE PART OF KIT P/N 4721		1
16	PAHZZ	78500	3235H2166	.HUB, BODY		1
17	PAHZZ	78500	1229-C-1511	.WASHER, FLAT PART OF KIT P/N 4721		16
18	KFHZZ	78500	MS212035-2-A	.SCREW, CAP, HEXAGON H PART OF KIT P/N 4721		16
19	KFFZZ	78500	40-X-1241	.NUT, SELF-LOCKING, HE PART OF KIT P/N KIT4710, 4721		1
20	PFFZZ	78500	A33260F1280	.YOKE, UNIVERSAL JOIN		1
21	PAFZZ	78500	A-1205-F-2502	.SEAL, PLAIN ENCASED PART OF KIT P/N 4724		1
22	PAFZZ	78500	2297N3888	.DEFLECTOR, DIRT AND PART OF KIT P/N KIT4710		1
23	PAFZZ	78500	A1205U2257	.SEAL, PLAIN ENCASED PART OF KIT P/N KIT4710, 4724		1
24	PAFZZ	78500	66589	.CONE AND ROLLERS, TA PART OF KIT P/N 4724		1
25	PAHZZ	78500	66520	.CUP, TAPERED ROLLER PART OF KIT P/N 4724		1
26	PAHZZ	78500	MS210035-2-A	.SCREW, MACHINE		8
27	PAHZZ	78500	MWA-510	.WASHER, FLAT		8
28	PAHZZ	78500	A-3226-A-1275	.HOUSING, BEARING UNI INCLUDES CAGE P/N 3226A1275 AND CUP P/N'S HM813810 AND 66570		1
29	KFHZZ	78500	2203-K-9761	.SPACER, PINION, BRG .405 IN (10.500MM) PART OF KIT P/N 4718	V	
29	KFHZZ	78500	2203-L-9762	.SPACER, PINION, BRG .406 IN (10.325MM) PART OF KIT P/N 4718	V	
29	KFHZZ	78500	2803-A-2783	.SPACER, PINION, BRG .415 IN (10.550MM) PART OF KIT P/N 4718	V	

(1) ITEM NO	(2) SMR CODE	(3) FSCM	(4) PART NUMBER	(5) DESCRIPTION AND USABLE ON CODE (UOC)		(6) QTY
29	KFHZZ	78500	2803-B-2784	.SPACER, PINION, BRG .416 IN (10.575MM) PART OF KIT P/N 4718	V	
29	KFHZZ	78500	2803-C-2785	.SPACER, PINION, BRG .416 IN (10.600MM) PART OF KIT P/N 4718	V	
29	KFHZZ	78500	2803-D-2786	.SPACER, PINION, BRG .418 IN (10.625MM) PART OF KIT P/N 4718	V	
29	KFHZZ	78500	2803-E-2787	.SPACER, PINION, BRG .419 IN (10.650MM) PART OF KIT P/N 4718	V	
29	KFHZZ	78500	2803-S-2775	.SPACER, PINION, BRG .407 IN (10.350MM) PART OF KIT P/N 4718	V	
29	KFHZZ	78500	2803-T-2776	.SPACER, PINION, BRG .408 IN (10.375MM) PART OF KIT P/N 4718	V	
29	KFHZZ	78500	2803-U-2777	.SPACER, PINION, BRG .409 IN (10.400MM) PART OF KIT P/N 4718	V	
29	KFHZZ	78500	2803-V-2778	.SPACER, PINION, BRG .410 IN (10.425MM) PART OF KIT P/N 4718	V	
29	KFHZZ	78500	2803-W-2779	.SPACER, RING .411 IN (10.450MM) PART OF KIT P/N 4718	V	
29	KFHZZ	78500	2803-X-2780	.SPACER, PINION, BRG .412 IN (10.475MM) PART OF KIT P/N 4718	V	
29	KFHZZ	78500	2803-Y-2781	.SPACER, PINION, BRG .413 IN (10.500MM) PART OF KIT P/N 4718	V	
29	KFHZZ	78500	2803-Z-2782	.SPACER, PINION, BRG .414 IN (10.525MM) PART OF KIT P/N 4718	V	
30	PAHZZ	78500	HM813810	.CUP, TAPERED ROLLER PART OF KIT P/N 4724		1
31	PAHZZ	78500	HM813844	.CONE AND ROLLERS, TA PART OF KIT P/N 4724		1
32	KFHZZ	78500	41633K2	.AMBOID GEAR DRIVE PART OF KIT P/N 4721		1
33	KFHZZ	78500	2803-G-2763	.SPACER, PINION, BRG .003 IN (.076MM) PART OF KIT P/N 4718	V	
33	KFHZZ	78500	2803-H-2764	.SPACER, PINION, BRG .005 IN .127MM) PART OF KIT P/N 4718	V	
33	KFHZZ	78500	2803-J-2766	.SPACER, PINION, BRG .010 IN (.254MM) PART OF KIT P/N 4718	V	
34	PAHHH	78500	A2-3200-W-1869	.DIFFERENTIAL, DRIVIN		1
35	PAHZZ	78500	1246D342	. .PIN, SHOULDER, HEADLE		4
36	PAHZZ	78500	1229G4401	. .WASHER, FLAT		4
37	PAHZZ	78500	41X1363	. .SCREW, CAP, HEXAGON H		4
38	PAHZZ	78500	1199R2176	.PIN, COTTER		2

END OF FIGURE

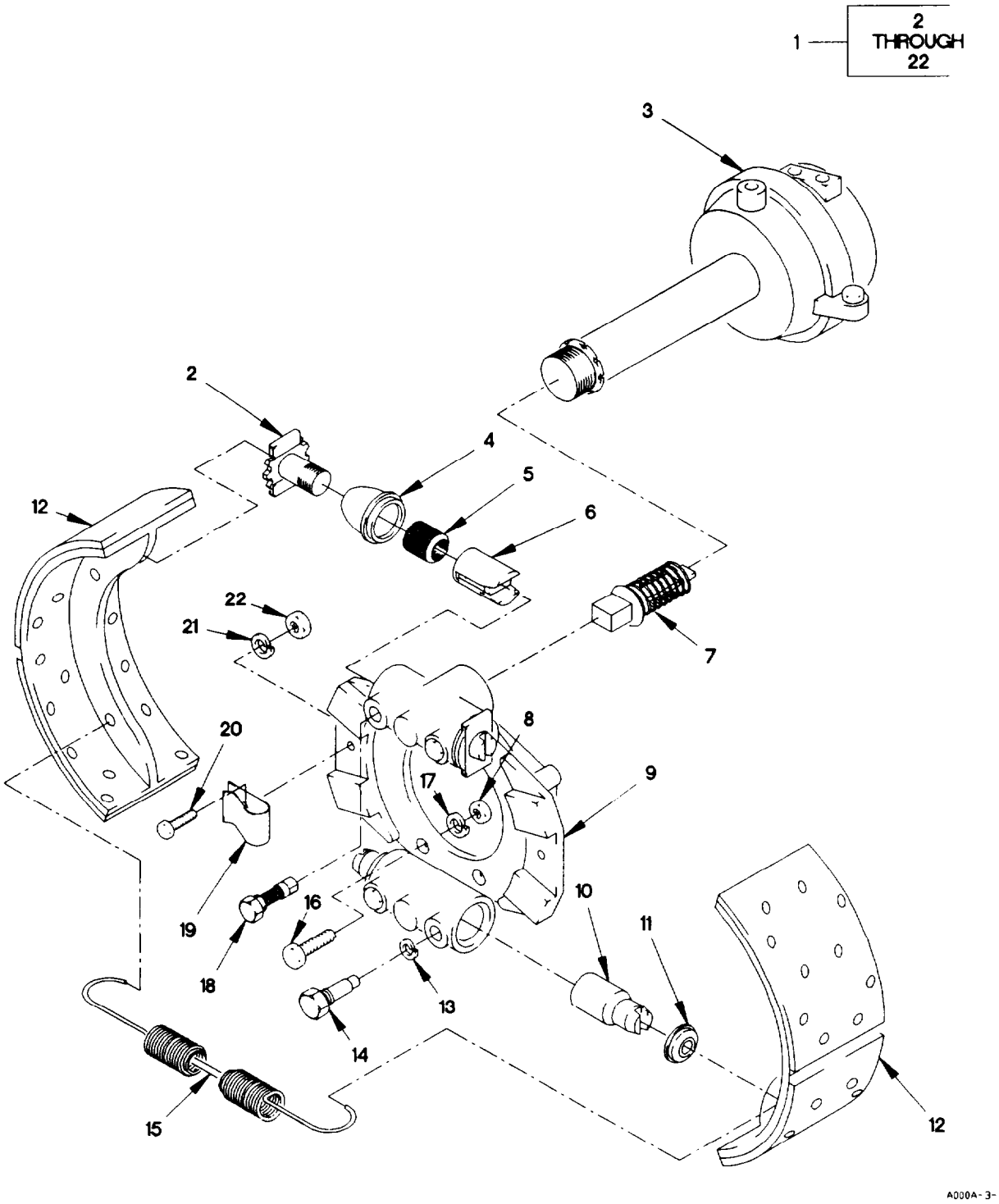

Figure 133. Front Brake Assembly

(1) ITEM NO	(2) SMR CODE	(3) FSCM	(4) PART NUMBER	(5) DESCRIPTION AND USABLE ON CODE (UOC)	(6) QTY
				GROUP 1202: SERVICE BRAKES FIG. 133 FRONT BRAKE ASSEMBLY	
1	AOOOO	78500	RSA-1550-869	BRAKE ASSY, RH	1
1	AOOOO	78500	RSA-1550-870	BRAKE ASSY, LH	1
2	PAOZZ	78500	A-2297-V-5326	.ADJUSTING SCREW ASS PART OF KIT P/N MPS4012	2
3	PAOZZ	78500	E4-3276P-16	.CHAMBER, AIR BRAKE	2
4	PAOZZ	78500	1205-C-2005	.SEAL, PLAIN ENCASED PART OF KIT P/N MPS4012	2
5	KFOZZ	78500	3280K8175	.ACTUATOR PART OF KIT P/N MPS4012	1
6	PAOZZ	78500	83280W8187	.PLUNGER ACTUATOR AS PART OF KIT P/N MPS4012	2
7	PAOZZ	78500	A-2247-E-1019	.WEDGE, BRAKE EXPANDE PART OF KIT P/N MPS4012	2
8	PAOZZ	78500	122E1487	.NUT, SELF-LOCKING, HE	2
9	PAOZZ	78500	3211H5546	.SPIDER, BRAKE	1
10	PAOZZ	78500	2297-A-5331	.PISTON, HYDRAULIC BR LEFT SIDE	2
10	PAOZZ	78500	2297-M-4823	.PISTON, HYDRAULIC BR RIGHT SIDE	2
11	PAOZZ	78500	1205-B-2004	.SEAL, PLAIN ENCASED PART OF KIT P/N MPS4012	2
12	KFOZZ	78500	A1-3222-V-2232	.BRAKE SHOE ASSY PART OF KIT P/N MPS-4285	1
13	PAOZZ	78500	1729B262	.WASHER, LOCK 19/32	4
14	PAOZZ	78500	A-3280-Z-8190	.GUIDE, PLUNGER PART OF KIT P/N MPS4012	2
15	PAOZZ	78500	2758W127	.SPRING PART OF KIT P/N MPS-4285, MPS4012	2
16	PAOZZ	78500	S255ZZ	.SCREW, CAP, HEXAGON H	4
17	PAOZZ	78500	1229-S-513-C	.WASHER, LOCK 5/16	4
18	PAOZZ	78500	A1-2297U4597	.GUIDE ASSEMBLY, PAWL	2
19	PAOZZ	78500	2257-M-1001	.CLIP, SPRING TENSION	2
20	KFOZZ	78500	MS208020	.SCREW, CAP	2
21	KFOZZ	78500	42X1064	.WASHER, LOCK PART OF KIT P/N MPS4012	2
22	KFOZZ	78500	MN308	.NUT PART OF KIT P/N MPS 4012	2

END OF FIGURE

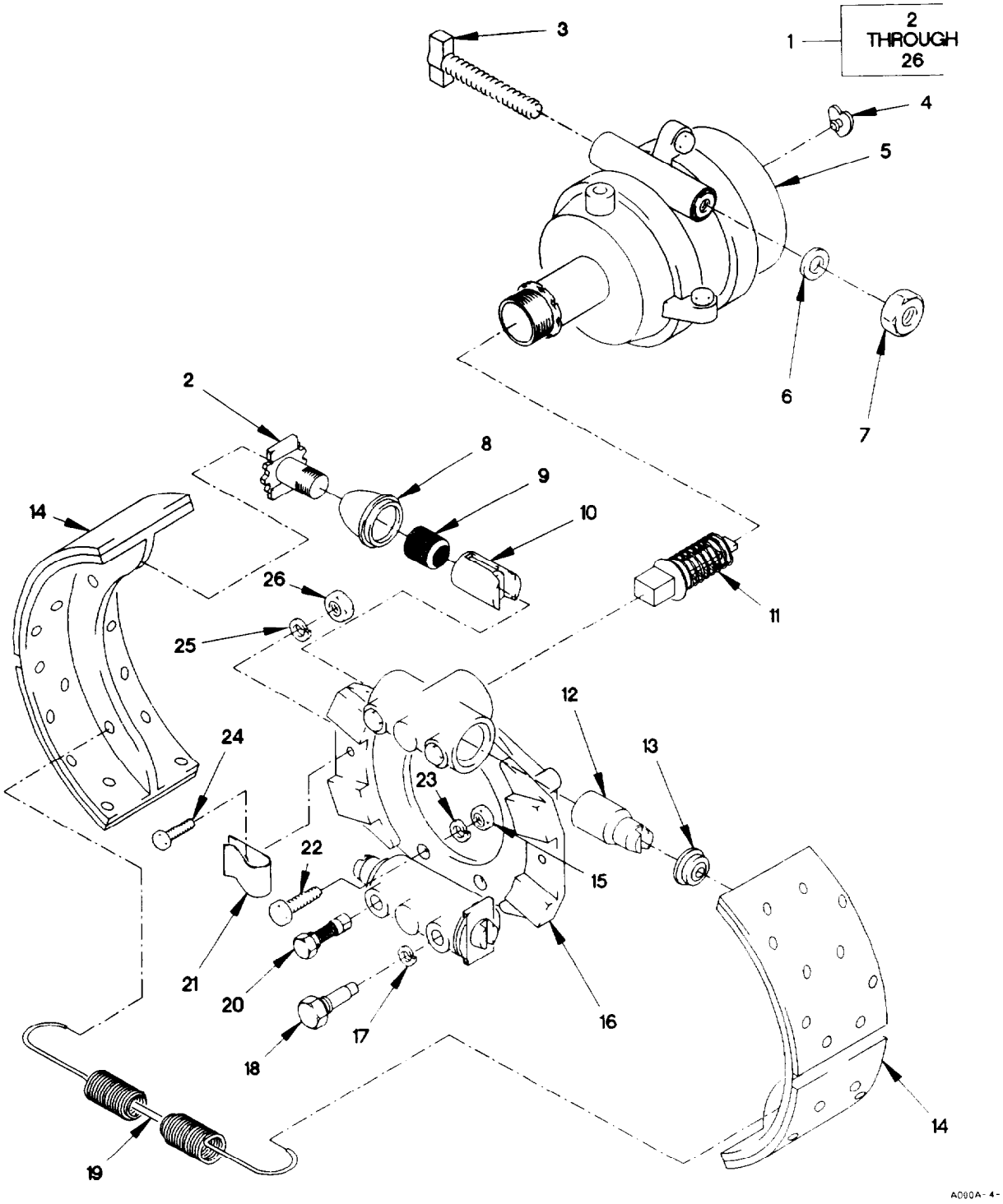

Figure 134. Rear Brake Assembly

(1) ITEM NO	(2) SMR CODE	(3) FSCM	(4) PART NUMBER	(5) DESCRIPTION AND USABLE ON CODE (UOC)	(6) QTY
				GROUP 1202: SERVICE BRAKES FIG. 134 REAR BRAKE ASSEMBLY	
1	AOOOO	78500	RDA-1550-873	BRAKE ASSY, REAR, LH	1
1	AOOOO	78500	RDA-1550-874	BRAKE ASSY, REAR, RH	1
2	PAOZZ	78500	A-2297-V-5326	.ADJUSTING SCREW ASS PART OF KIT P/N MPS4012	2
3	PAOZZ	50153	11M011	.STUD ASSEMBLY, RELEA CAGING BOLT	1
4	PAOZZ	98171	9999039	.PLUG, CHAMBER TOP	1
5	PAOZZ	78500	X24-3276J-10	.CHAMBER, AIR BRAKE	2
6	PAOZZ	96906	MS27183-18	.WASHER, FLAT 17/32	1
7	PAOZZ	96906	MS35690-804	.NUT, PLAIN, HEXAGON 1/2-13	1
8	PAOZZ	78500	1205-C-2005	.SEAL, PLAIN ENCASED PART OF KIT P/N MPS4012	2
9	KFOZZ	78500	3280K8175	.ACTUATOR PART OF KIT P/N MPS 4012	1
10	PAOZZ	78500	83280W8187	.PLUNGER ACTUATOR AS PART OF KIN P/N MPS4012	2
11	PAOZZ	78500	A-2247-E-1019	.WEDGE, BRAKE EXPANDE	2
12	PAOZZ	78500	2297-M-4823	.PISTON, HYDRAULIC BR RIGHT SIDE	2
12	PAOZZ	78500	2297-A-5331	.PISTON, HYDRAULIC BR LEFT SIDE	2
13	PAOZZ	78500	1205-B-2004	.SEAL, PLAIN ENCASED PART OF KIT P/N MPS4012	2
14	KFOZZ	78500	A1-3222-V-2232	.BRAKE SHOE ASSY PART OF KIT P/N MPS-4285	1
15	PAOZZ	78500	1227E1487	.NUT, SELF-LOCKING, HE	2
16	PAOZZ	78500	3211G5545	.SPIDER, BRAKE	1
17	PAOZZ	78500	1729B262	.WASHER, LOCK 19/32	4
18	PAOZZ	78500	A-3280-Z-8190	.GUIDE, PLUNGER	2
19	PAOZZ	78500	2758W127	.SPRING PART OF KIT P/N MPS-4285	2
20	PAOZZ	78500	A1-2297U4597	.GUIDE ASSEMBLY, PAWL	2
21	PAOZZ	78500	2257-M-1001	.CLIP, SPRING TENSION	2
22	PAOZZ	78500	S255Z	.SCREW, CAP, HEXAGON H	4
23	PAOZZ	78500	1229-S-513-C	.WASHER, LOCK 5/16	4
24	KFOZZ	78500	MS208020	.SCREW, CAP PART OF KIT P/N MPS4012	2
25	KFOZZ	78500	42X1064	.WASHER, LOCK PART OF KIT P/N MPS4012	2
26	KFOZZ	78500	MN308	.NUT PART OF KIT P/N MPS4012	2
				END OF FIGURE	

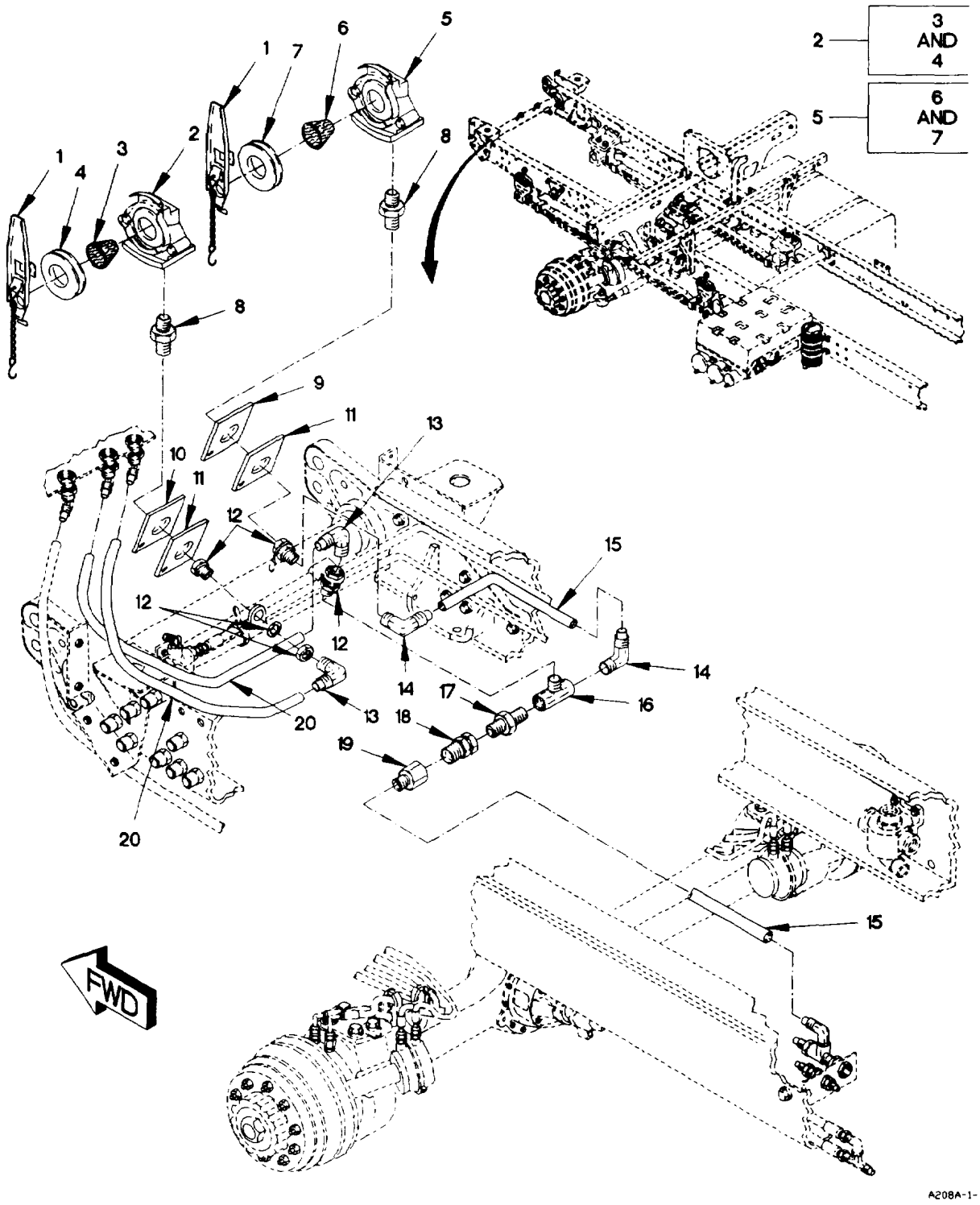

Figure 135. Front Gladhands, Hoses, and Fittings

(1) ITEM NO	(2) SMR CODE	(3) FSCM	(4) PART NUMBER	(5) DESCRIPTION AND USABLE ON CODE (UOC)		(6) QTY
				GROUP 1208: AIR BRAKE SYSTEM FIG. 135 FRONT GLADHANDS, HOSES AND FITTINGS		
1	PAOZZ	06721	N-30257-A	COUPLING, DUMMY		2
2	PAOZZ	06721	N-20415-PB	GLADHAND, SERVICE AS		1
3	PAOZZ	06721	1048011	.FILTER ELEMENT, FLUI		2
4	PAOZZ	98343	1509	.PACKING, PREFORMED		1
5	PAOZZ	06721	N-20415-NB	HOUSING, MECHANICAL		1
6	PAOZZ	06721	1048011	.FILTER ELEMENT, FLUI		2
7	PAOZZ	98343	1509	.PACKING, PREFORMED		1
8	PAOZZ	81343	8-6 140137C	REDUCER, PIPE		2
9	PAOZZ	96906	MS53007-1	PLATE, IDENTIFICATIO		1
10	PAOZZ	58536	A-A-52483	PLATE, IDENTIFICATIO		1
11	PAOZZ	19207	12419865	PLATE, EMERG SERVICE		2
12	PAOZZ	93061	207ACBH-6	COUPLING, PIPE		3
13	PAOZZ	81343	8-6 100202BA	ELBOW, PIPE TO TUBE		5
14	PAOZZ	81343	6-6 100202BA	ELBOW, PIPE TO TUBE		2
15	MOOZZ	19207	12420572-006X	TUBE, NONMETALLIC MAKE FROM HOSE P/N: J844TYBSIZE 3/8 BLACK (81343), CUT TO LENGTH	V	
16	PAOZZ	81343	6-6-6-130425B	TEE, PIPE		1
17	PAOZZ	81343	6-6 130137B	NIPPLE, PIPE		2
18	PAOZZ	06721	N30252B	VALVE, CHECK		1
19	PAOZZ	81343	6-6 100103BA	ADAPTER, STRAIGHT, PI		1
20	MOOZZ	19207	12420572-008X	HOSE, NONMETALLIC MAKE FROM HOSE P/N: C608-100BLK (13174), CUT TO LENGTH		1

END OF FIGURE

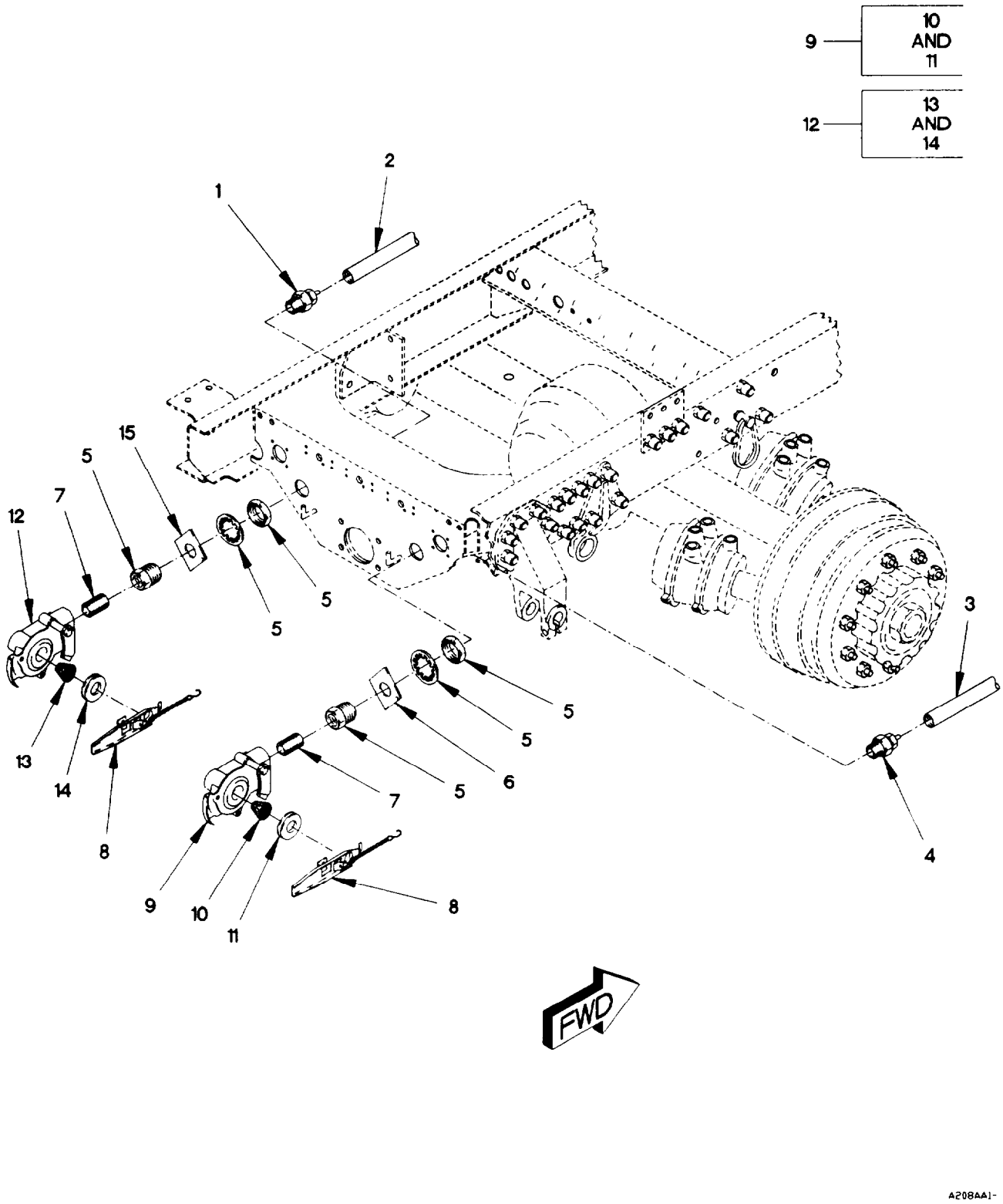

Figure 136. Rear Gladhands, Hoses, and Fittings

(1) ITEM NO	(2) SMR CODE	(3) FSCM	(4) PART NUMBER	(5) DESCRIPTION AND USABLE ON CODE (UOC)		(6) QTY
				GROUP 1208: AIR BRAKE SYSTEM FIG. 136 REAR GLADHANDS, HOSES AND FITTINGS		
1	PAOZZ	81343	8-8 100102BA	ADAPTER, STRAIGHT, PI		1
2	MOOZZ	19207	12420572-008X	HOSE, NONMETALLIC MAKE FROM HOSE P/N: C608-100BLK (13174), CUT TO LENGTH		1
3	MOOZZ	19207	12420572-006X	TUBE, NONMETALLIC MAKE FROM HOSE P/N J844TYBSIZE 3/8 BLACK (81343), CUT TO LENGTH	V	
4	PAOZZ	81343	6-8 100102BA	ADAPTER, STRAIGHT, PI		1
5	PAOZZ	30327	129-B-08X24	COUPLING, PIPE		2
6	PAOZZ	19207	12420739-002	PLATE, ID, EMERGENCY		1
7	PAOZZ	32537	902466-22	NIPPLE, PIPE		2
8	PAOZZ	06721	N30257	DUMMY COUPLING, AUTO		2
9	PAOZZ	06721	N-20415-PB	GLADHAND, SERVICE AS		1
10	PAOZZ	06721	1048011	.FILTER ELEMENT, FLUI		1
11	PAOZZ	98343	1509	.PACKING, PREFORMED		1
12	PAOZZ	06721	N-20415-NB	HOUSING, MECHANICAL		1
13	PAOZZ	06721	1048011	.FILTER ELEMENT, FLUI		2
14	PAOZZ	98343	1509	.PACKING, PREFORMED		1
15	PAOZZ	19207	12420739-001	PLATE, ID, SERVICE		1
				END OF FIGURE		

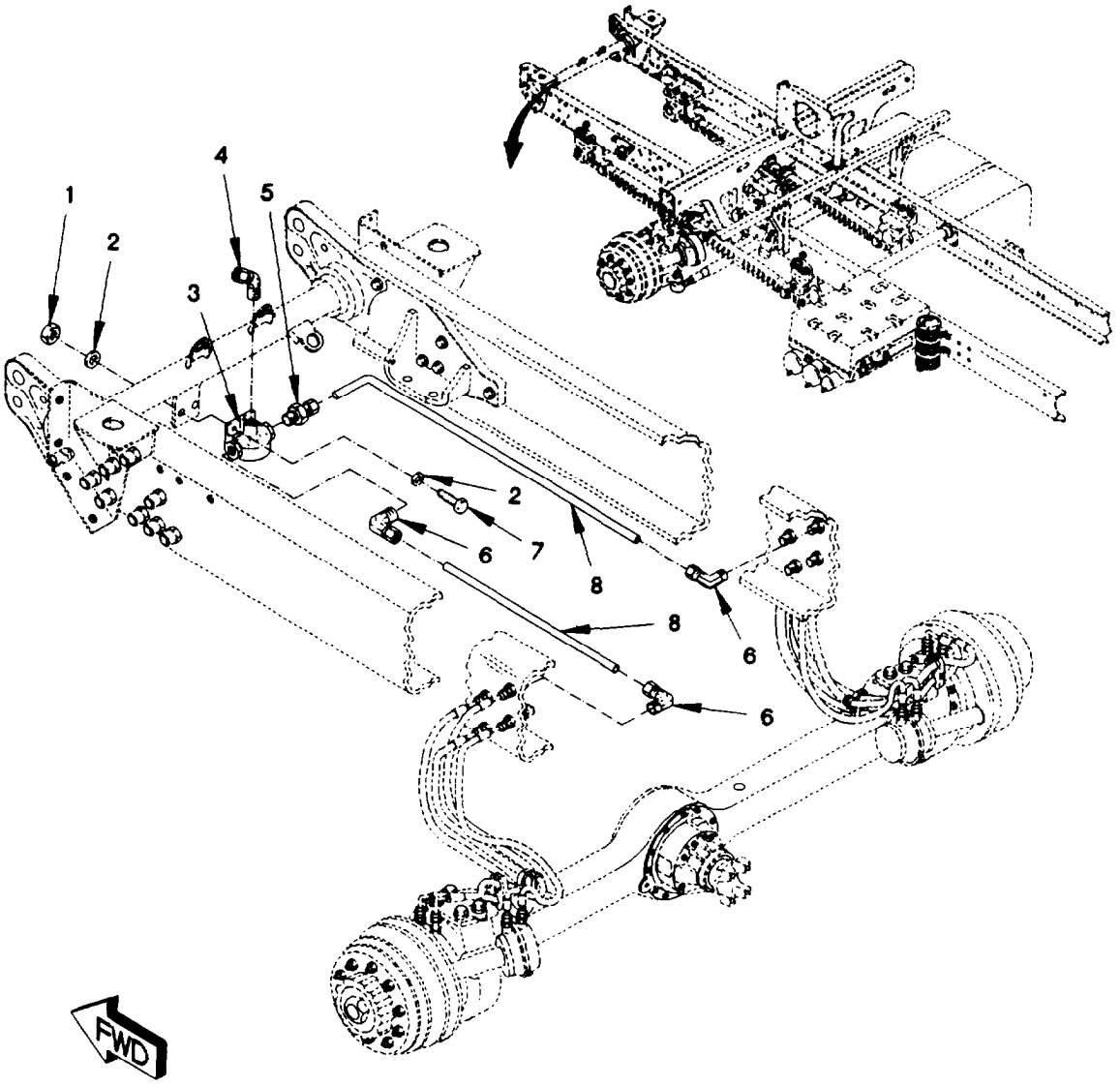

A208AB1-

Figure 137. Front Axle Quick Release Valve, Hoses, Clamps, and Fittings
(Sheet 1 of 4)

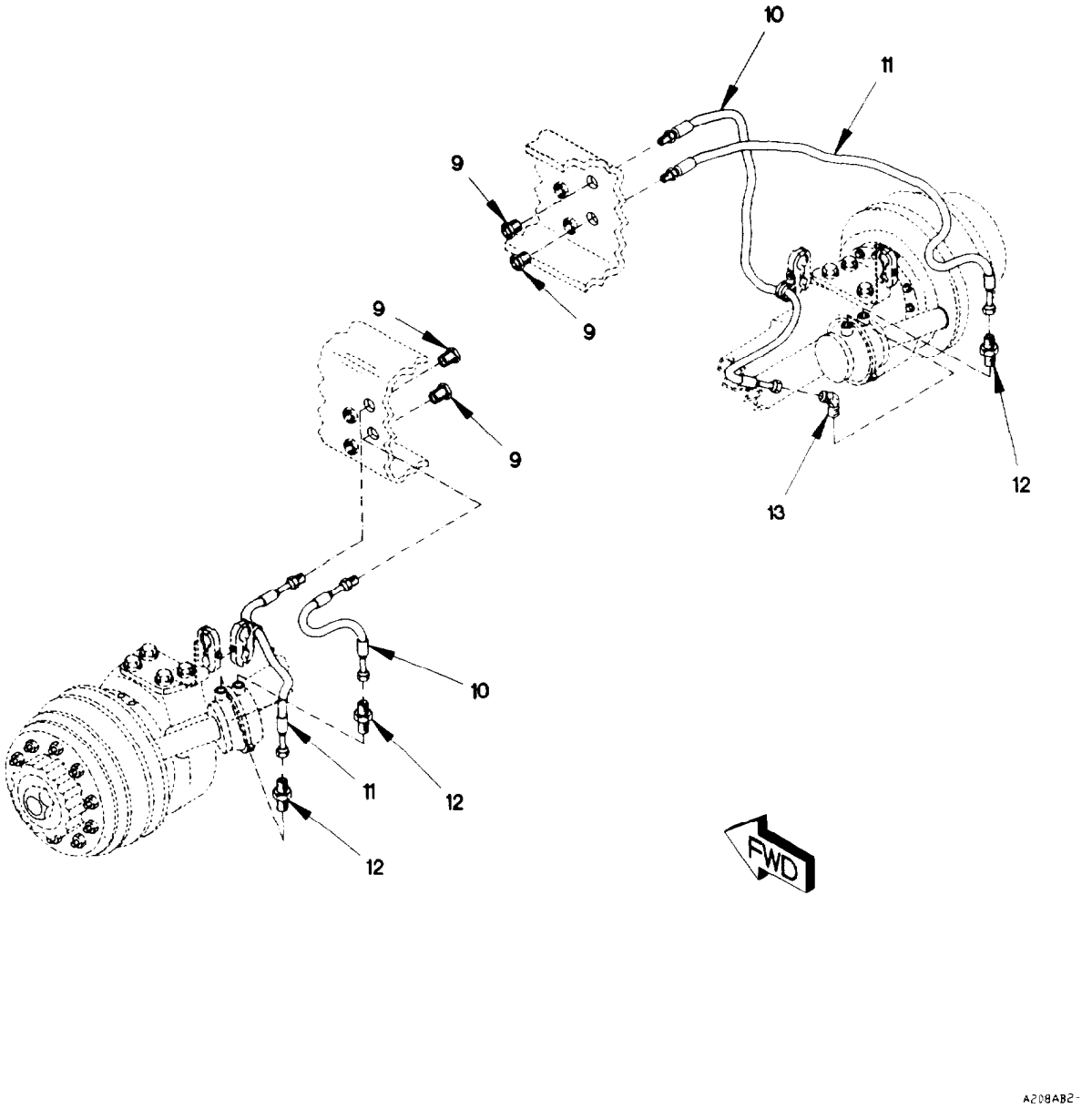

Figure 137. Front Axle Quick Release Valve, Hoses, Clamps. and Fittings (Sheet 2 of 4)

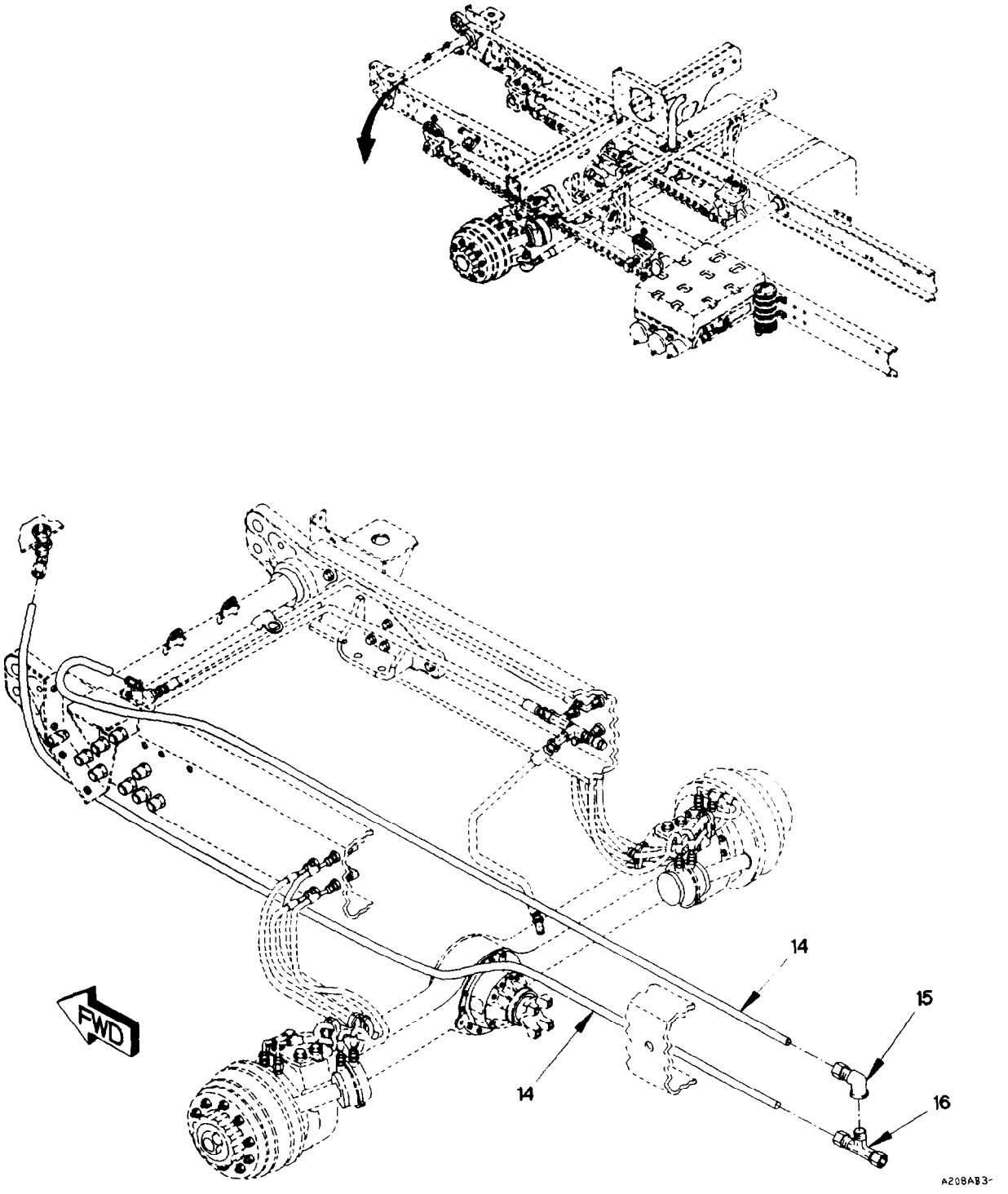

Figure 137. Front Axle Quick Release Valve. Hoses, Clamps. and Fittings (Sheet 3 of 4)

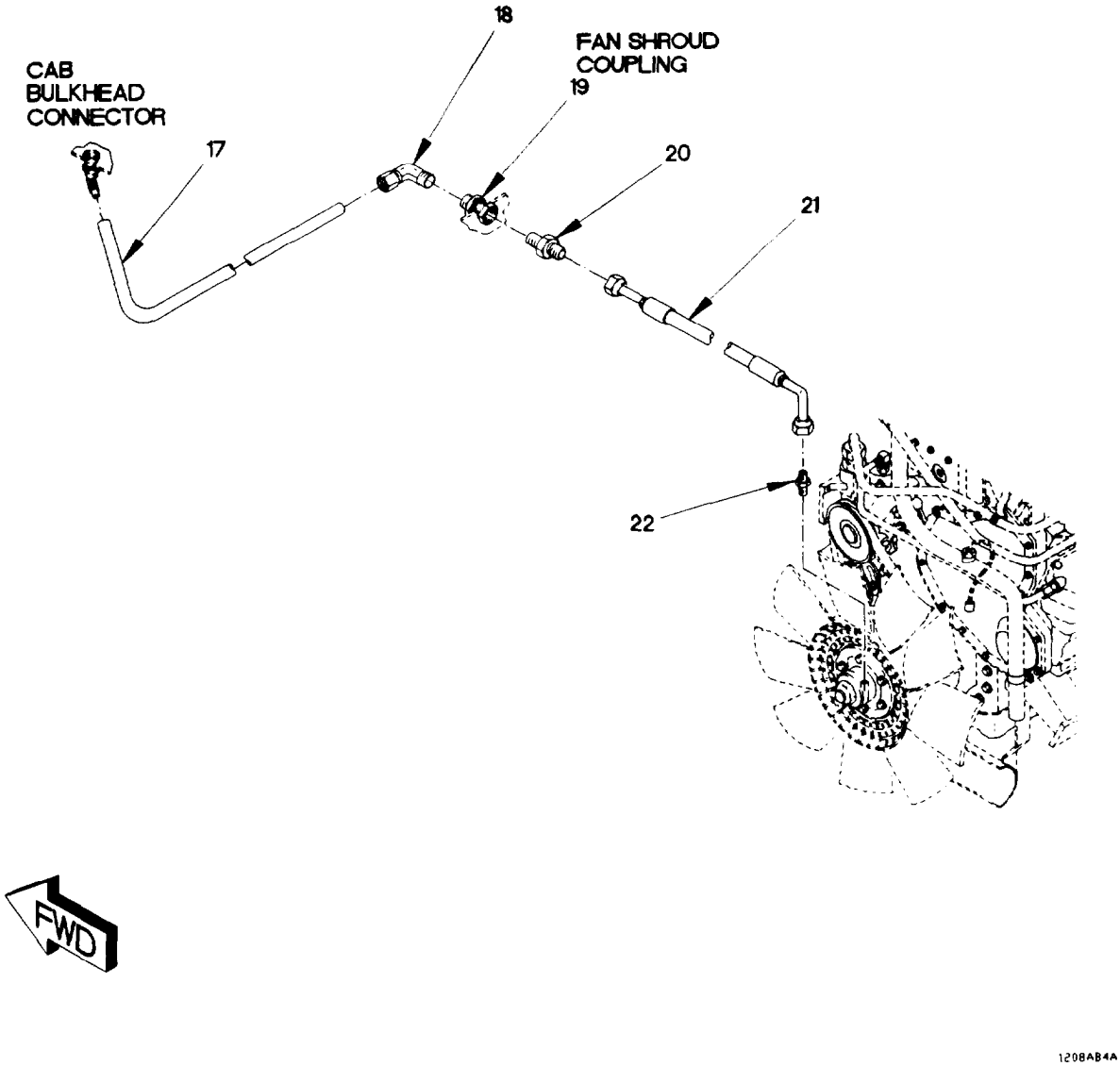

Figure 137. Front Axle Quick Release Valve, Hoses, Clamps, and Fittings (Sheet 4 of 4)

(1) ITEM NO	(2) SMR CODE	(3) FSCM	(4) PART NUMBER	(5) DESCRIPTION AND USABLE ON CODE (UOC)		(6) QTY
				GROUP 1208: AIR BRAKE SYSTEM FIG. 137 FRONT AXLE QUICK RELEASE VALVE, HOSES, CLAMPS AND FITTINGS		
1	PAOZZ	19207	12414315-006	NUT, SELF-LOCKING, HE M8 X 1.25		2
2	PAOZZ	34914	990 3861	WASHER, FLAT M8.4		4
3	PAOZZ	06721	N-50009	VALVE, BRAKE PNEUMAT		1
4	PAOZZ	81343	8-6 100302BA	ELBOW, PIPE TO TUBE		2
5	PAOZZ	79470	1468X8	ADAPTER, STRAIGHT, PI		1
6	PAOZZ	81343	8-6 100202BA	ELBOW, PIPE TO TUBE		5
7	PAOZZ	81495	071 408 32	BOLT, MACHINE M8 X 1.25 X 25		2
8	MOOZZ	19207	12420572-008X	HOSE, NONMETALLIC MAKE FROM HOSE P/N: C608-100BLK (13174), CUT TO LENGTH		1
9	PAOZZ	93061	207ACBH-6	COUPLING, PIPE		4
10	PAOZZ	19207	12414694-001	HOSE ASSEMBLY, NONME		2
11	PAOZZ	19207	12414694-002	HOSE ASSEMBLY, NONME		2
12	PAOZZ	72915	8040313	ADAPTER, STRAIGHT, PI		3
13	PAOZZ	81343	6-6 010302B	ELBOW, PIPE TO TUBE		1
14	MOOZZ	19207	12420572-006X	TUBE, NONMETALLIC MAKE FROM HOSE P/N: J844TYBSIZE 3/8 BLACK (81343), CUT TO LENGTH	V	
15	PAOZZ	81343	8-6 100203BA	ELBOW, PIPE TO TUBE		1
16	PAOZZ	81343	8-6-6 100425BA	TEE, PIPE TO TUBE		1
17	MOOZZ	19207	12420572-004X	TUBING, NONMETALLIC MAKE FROM HOSE P/N: NT-10004-BLK (79470), CUT TO LENGTH	V	
18	PAOZZ	79470	1469X4X4	ELBOW, PIPE TO TUBE		1
19	PAOZZ	93061	207ACBHS-4	COUPLING, PIPE		1
20	PAOZZ	96906	MS35869-22	ADAPTER, STRAIGHT, PI		1
21	PAOZZ	19207	12420062-001	HOSE ASSEMBLY, NONME		1
22	PAOZZ	81343	4-2 010102S	ADAPTER, STRAIGHT, PI		1
				END OF FIGURE		

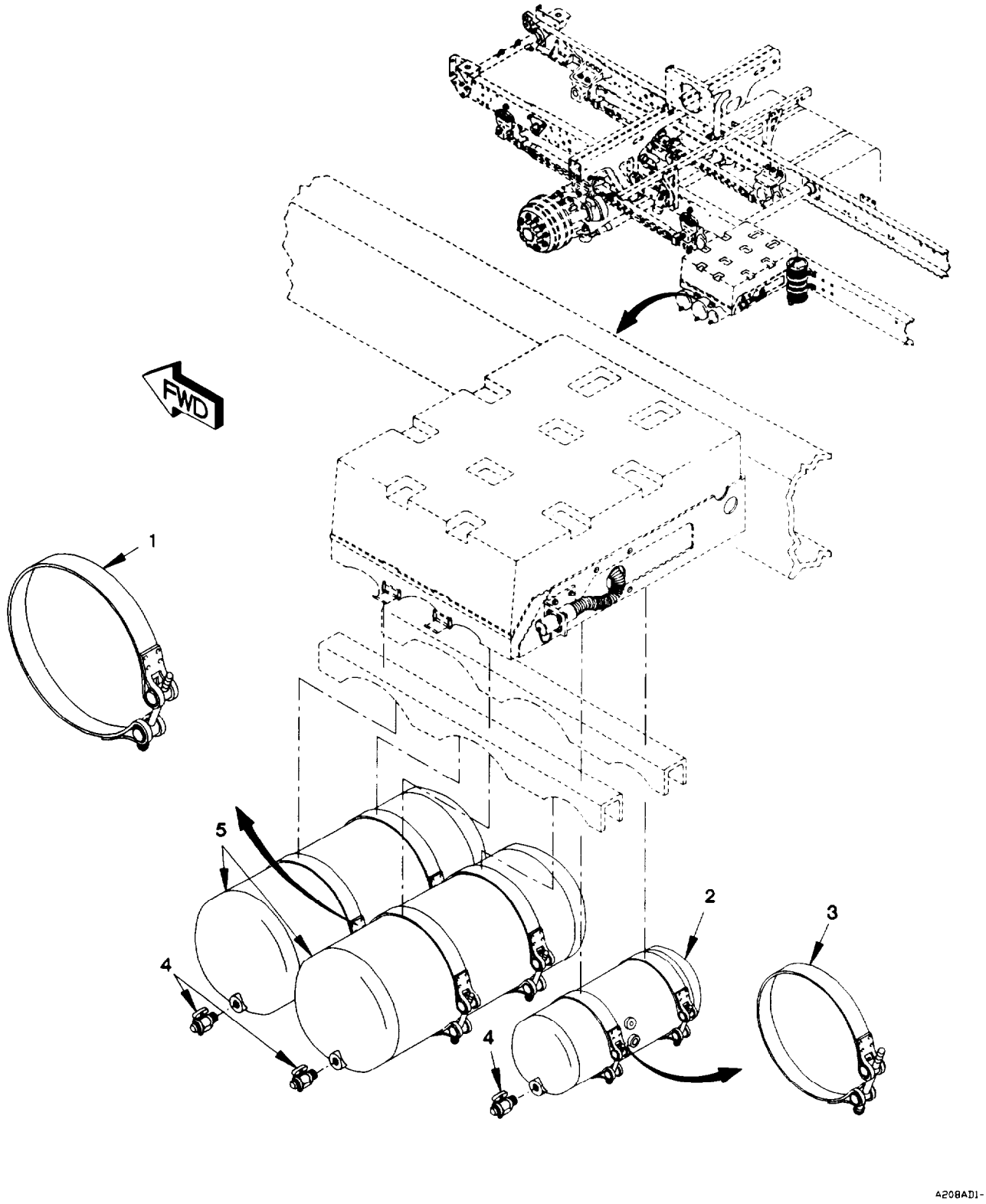

Figure 138. Air Tanks, Clamps, Hoses, and Fittings (Sheet 1 of 4)

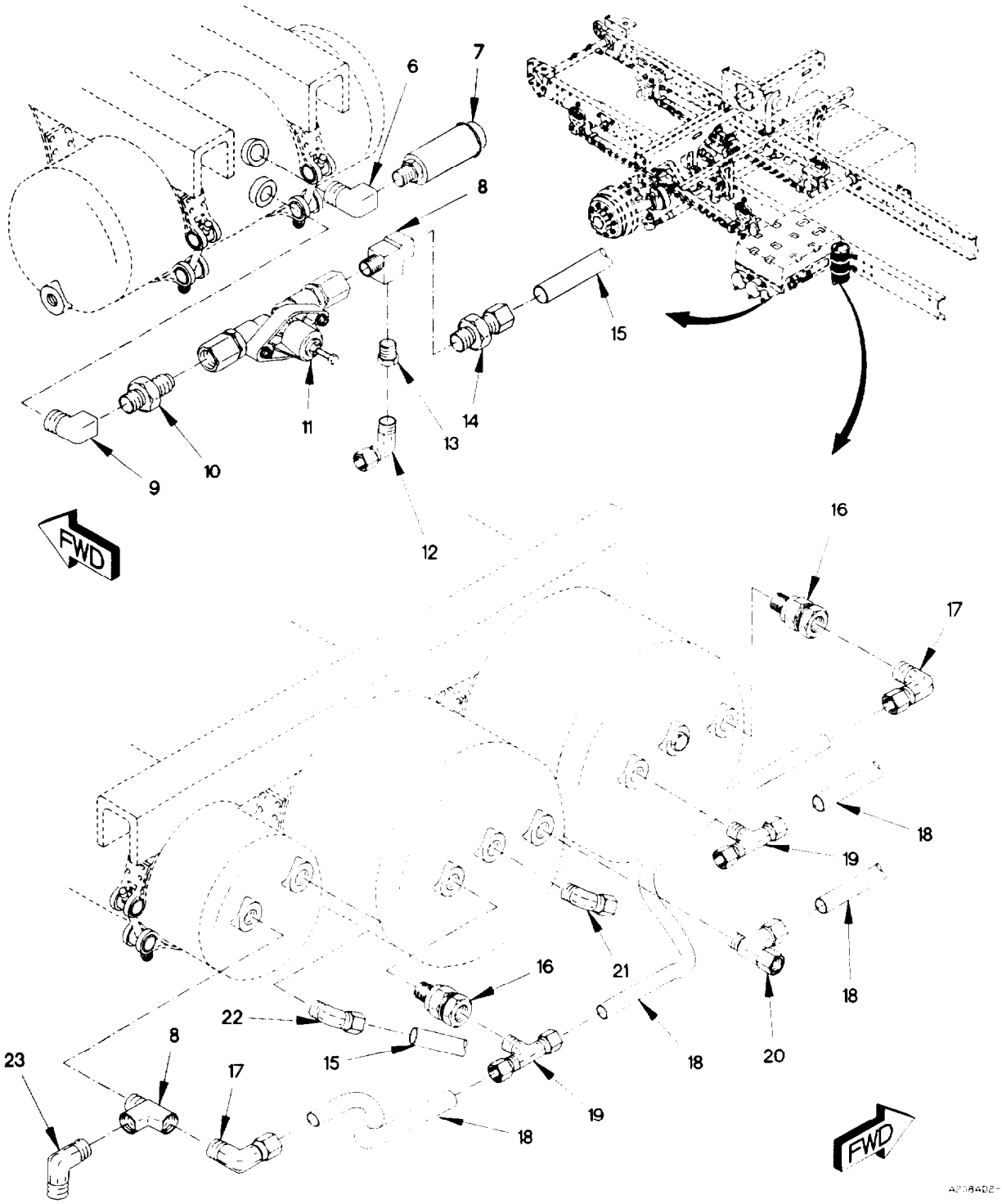

Figure 138. Air Tanks, Clamps, Hoses, and Fittings (Sheet 2 of 4)

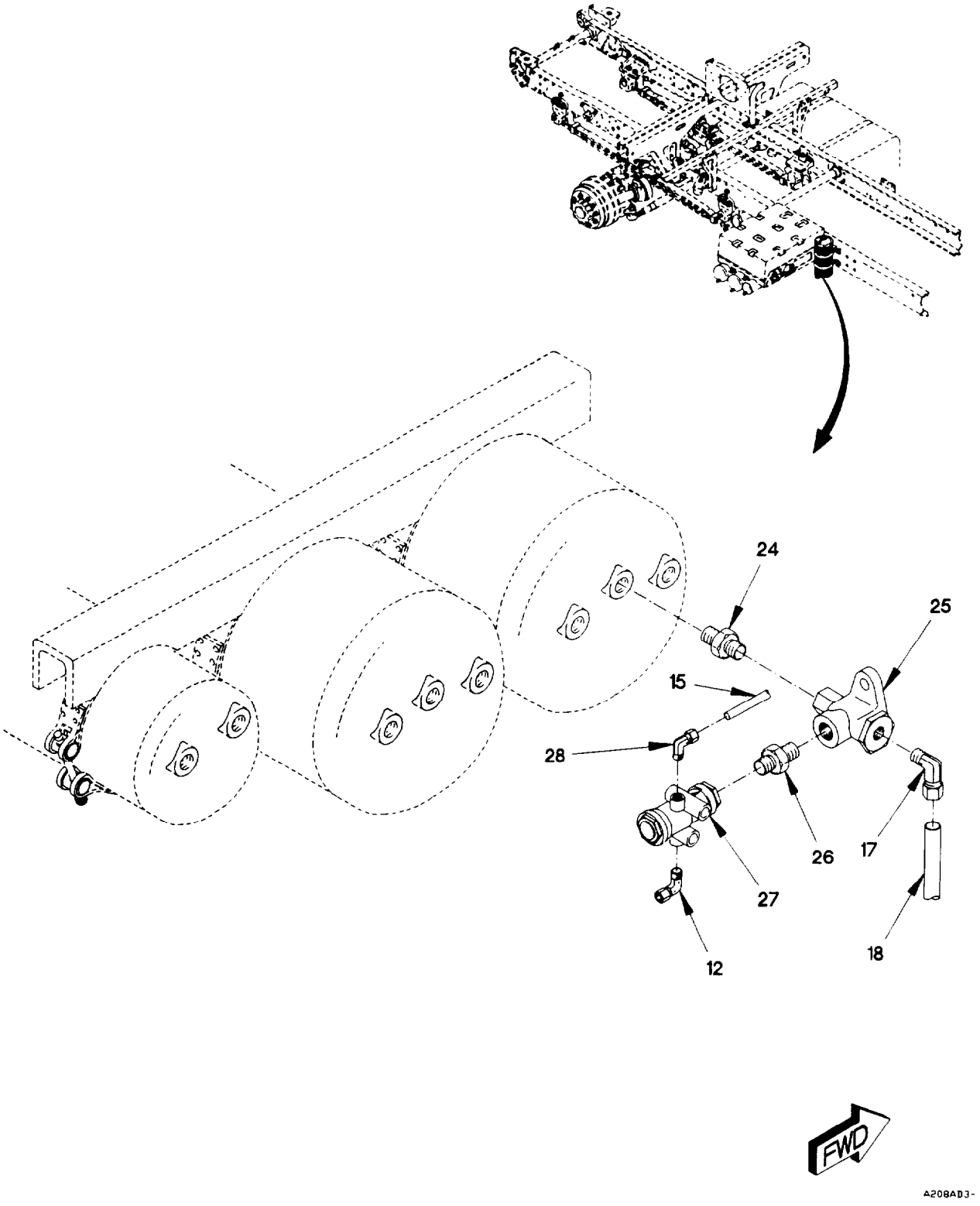

Figure 138. Air Tanks, Clamps, Hoses, and Fittings (Sheet 3 of 4)

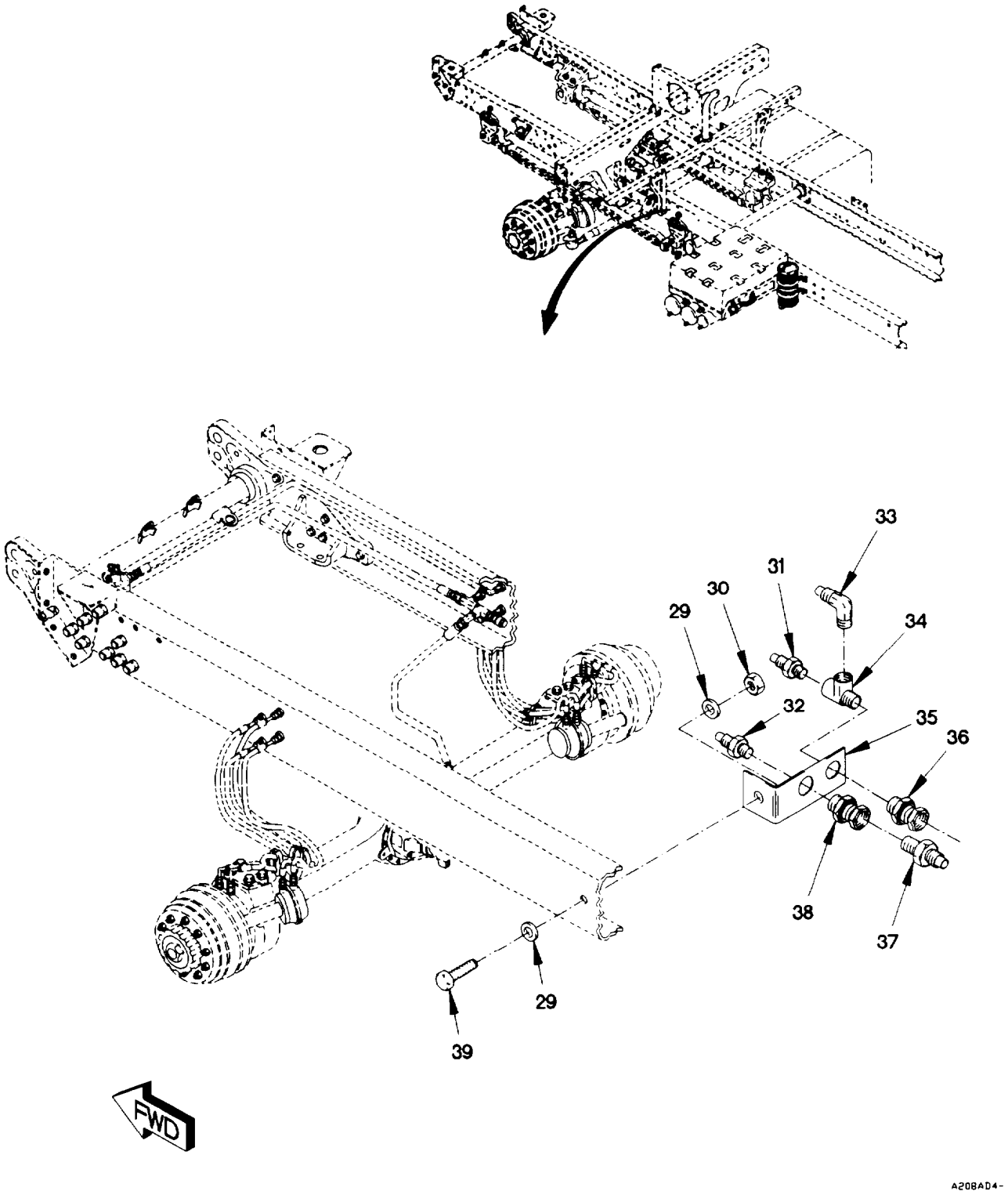

Figure 138. Air Tanks, Clamps, Hoses, and Fittings (Sheet 4 of 4)

(1) ITEM NO	(2) SMR CODE	(3) FSCM	(4) PART NUMBER	(5) DESCRIPTION AND USABLE ON CODE (UOC)		(6) QTY
				GROUP 1208: AIR BRAKE SYSTEM		
				FIG. 138 AIR TANKS, CLAMPS, HOSES AND FITTINGS		
1	PAOZZ	19207	12414454-001	BAND, RETAINING		4
1	PAOZZ	19207	12421379-002	BAND, RETAINING		4
2	PAOZZ	19207	12414369-002	TANK, PRESSURE		1
3	PAOZZ	19207	12414454-002	BAND, RETAINING		2
3	PAOZZ	19207	12421379-003	BAND, RETAINING		2
4	PAOZZ	06721	N-30256-C	COCK, SHUTOFF, SCREW		3
5	PAOZZ	0FW39	12414369-001	TANK, PRESSURE		2
6	PAOZZ	88044	AN914-2D	ELBOW, PIPE 1/4		1
7	PAOZZ	19207	12417381	SWITCH, PRESSURE		1
8	PAOZZ	81343	8-8-8 130424BA	TEE, PIPE		2
9	PAOZZ	81343	8-8 130239B	ELBOW, PIPE		1
10	PAOZZ	30327	122B1-2X1-2	NIPPLE, PIPE		1
11	PAOZZ	06721	N-30261-B	VALVE, REGULATING, SY		1
12	PAOZZ	79470	1469X4X4	ELBOW, PIPE TO TUBE		2
13	PAOZZ	93061	209P-8-4	BUSHING, PIPE		1
14	PAOZZ	81343	8-8 100102BA	ADAPTER, STRAIGHT, PI		1
15	MOOZZ	19207	12420572-006X	TUBE, NONMETALLIC MAKE FROM HOSE P/N: J844TYBSIZE 3/8 BLACK (81343), CUT TO LENGTH	V	
16	PAOZZ	06721	N13526H	VALVE, CHECK		2
17	PAOZZ	81343	8-8 100202BA	ELBOW, PIPE TO TUBE		3
18	MOOZZ	19207	12420572-008X	HOSE, NONMETALLIC MAKE FROM HOSE P/N: C608-100BLK (13174), CUT TO LENGTH		2
19	PAOZZ	93061	272NTA-8-8	TEE, PIPE TO TUBE		2
20	PAOZZ	93061	271NTA-8-8	TEE, PIPE TO TUBE		1
21	PAOZZ	81343	8-8 100302BA	ELBOW, PIPE TO TUBE		1
22	PAOZZ	81343	6-8 100302BA	ELBOW, PIPE TO TUBE		1
23	PAOZZ	81343	10-8 100202BA	ELBOW, PIPE TO TUBE		1
24	PAOZZ	81343	8-6 140137C	REDUCER, PIPE		1
25	PAOZZ	06721	N-50000	VALVE, CHECK		1
26	PAOZZ	81343	6-4 140137C	REDUCER, PIPE		1
27	PAOZZ	06853	101450	VALVE, PLUG		1
28	PAOZZ	81343	6-2 100202BA	ELBOW, PIPE TO TUBE		1
29	PAOZZ	21969	A 13 DIN125-ST	WASHER, FLAT M13		2
30	PAOZZ	19207	12414315-012	NUT, PLAIN, HEXAGON M12 X 1.75		1
31	PAOZZ	81343	4-4-100102BA	ADAPTER, STRAIGHT, PI		1
32	PAOZZ	79470	1468X6X6	ADAPTER, STRAIGHT, PI		1
33	PAOZZ	81343	6-6 100202BA	ELBOW, PIPE TO TUBE		1
34	PAOZZ	81343	6-6-6 130424B	TEE, PIPE		1

(1) ITEM NO	(2) SMR CODE	(3) FSCM	(4) PART NUMBER	(5) DESCRIPTION AND USABLE ON CODE (UOC)	(6) QTY
35	PAOZZ	19207	12418278	BRACKET, ANGLE	1
36	PAOZZ	93061	207ACBH-6	COUPLING, PIPE	1
37	PAOZZ	81343	4-6-010102B	ADAPTER, STRAIGHT, PI	1
38	PAOZZ	93061	207ACBHS-4	COUPLING, PIPE	1
39	PAOZZ	19207	12414419-136	SCREW, CAP, HEXAGON H M12 X 1.75 X 40	1

END OF FIGURE

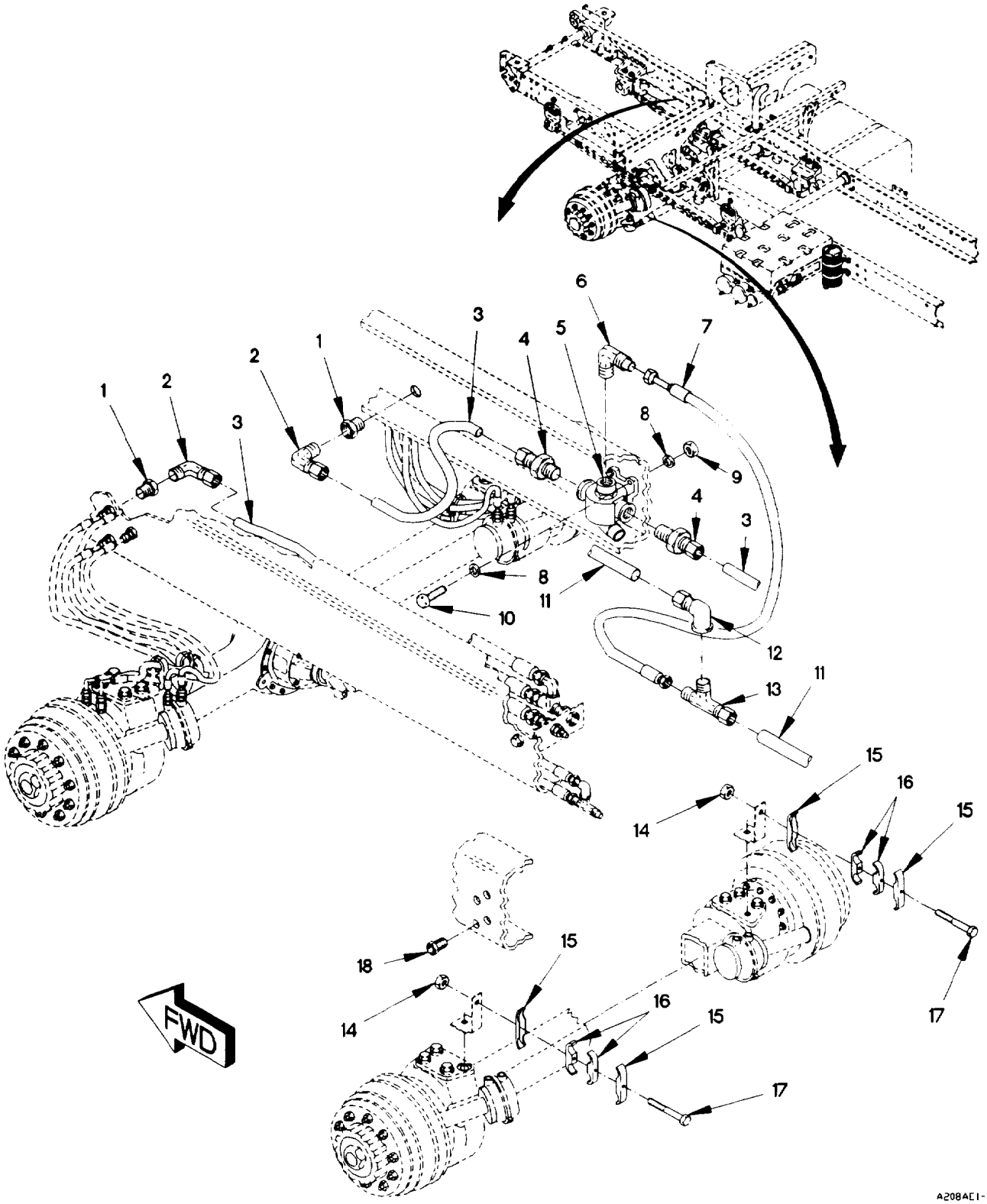

Figure 139. CTIS Quick Release Valves, Hoses, and Fittings (Sheet 1 of 3)

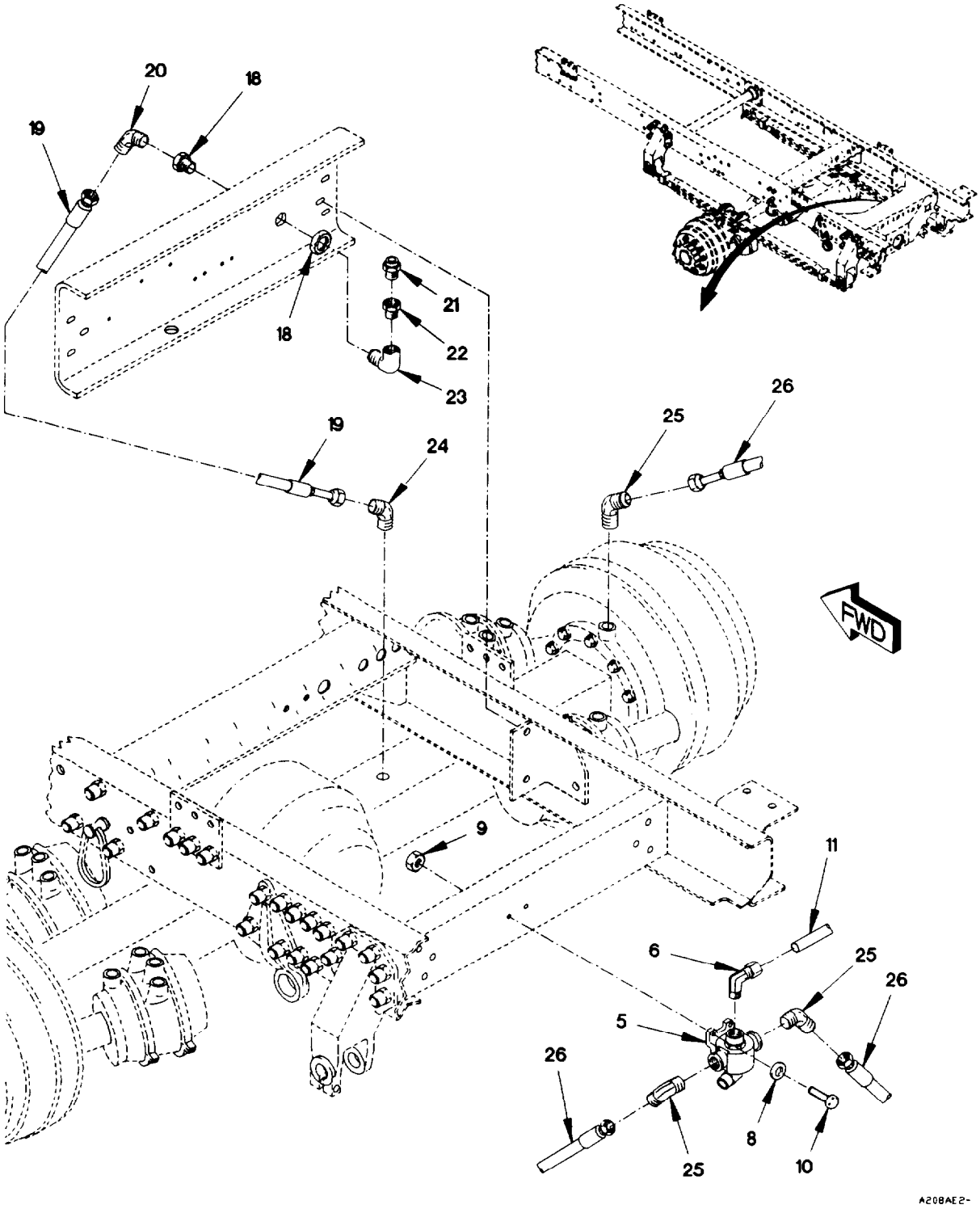

Figure 139. CTIS Quick Release Valves, Hoses, and Fittings
(Sheet 2 of 3)

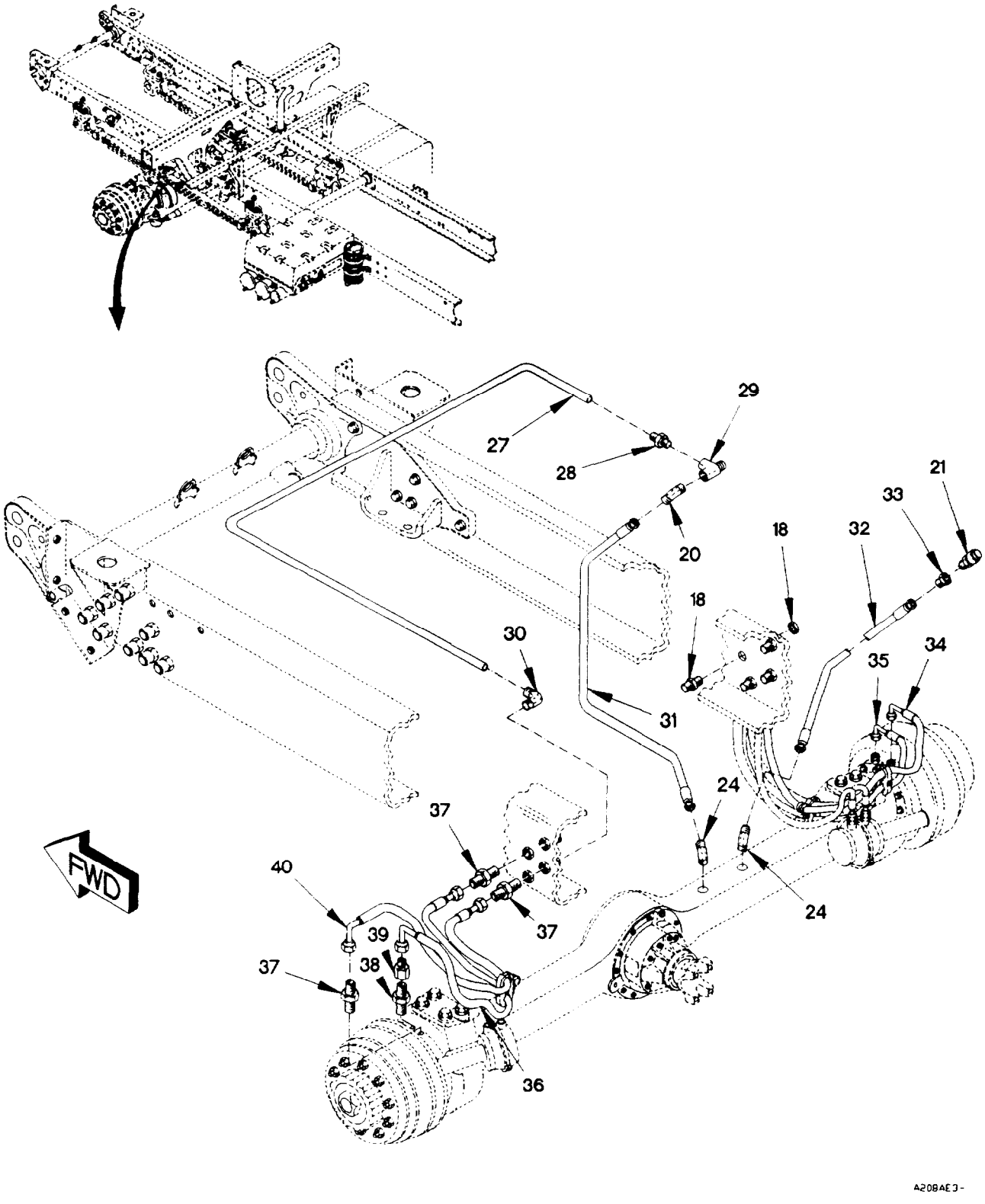

Figure 139. CTIS Quick Release Valves, Hoses, and Fittings
(Sheet 3 of 3)

(1) ITEM NO	(2) SMR CODE	(3) FSCM	(4) PART NUMBER	(5) DESCRIPTION AND USABLE ON CODE (UOC)	(6) QTY
				GROUP 1208: AIR BRAKE SYSTEM FIG. 139 CTIS QUICK RELEASE VALVES, HOSES, AND FITTINGS	
1	PAOZZ	30327	129-B-08X24	COUPLING, PIPE	2
2	PAOZZ	81343	10-8 100202BA	ELBOW, PIPE TO TUBE	2
3	MOOZZ	19207	12420572-010X	HOSE, NONMETALLIC MAKE FROM HOSE P/N PFT-10B-BLK-100 (61424) CUT TO LENGTH	1
4	PAOZZ	81343	10-6 100102BA	ADAPTER, STRAIGHT, PI	2
5	PAOZZ	7P109	599827	VALVE, BRAKE PNEUMAT	2
6	PAOZZ	81343	8-8 100202BA	ELBOW, PIPE TO TUBE	2
7	MOOZZ	19207	12420572-008X	HOSE, NONMETALLIC MAKE FROM HOSE P/N: C608-100BLK (13174), CUT TO LENGTH	1
8	PAOZZ	34914	990 3861	WASHER, FLAT M8.4	6
9	PAOZZ	19207	12414315-006	NUT, SELF-LOCKING, HE M8 X 1.25	2
10	PAOZZ	81495	071 408 32	BOLT, MACHINE M8 X 1.25 X 25	2
11	MOOZZ	19207	12420572-006X	TUBE, NONMETALLIC MAKE FROM HOSE P/N: J844TYBSIZE 3/8 BLACK (81343), CUT TO LENGTH	V
12	PAOZZ	81343	8-6 100203BA	ELBOW, PIPE TO TUBE	1
13	PAOZZ	79470	1472X8	TEE, PIPE TO TUBE	1
14	PAOZZ	19207	12414308-002	NUT, SELF-LOCKING, EX M6 X 1	2
15	PAOZZ	0TE27	LNU4222/127	CLAMP, HOSE, SPECIAL-	2
16	PAOZZ	0TE27	DPL4	CLAMP, HOSE, SPECIAL-	4
17	PAOZZ	19207	12414419-081	SCREW, CAP, HEXAGON H M6 X 1 X 45	2
18	PAOZZ	93061	207ACBHS-4	COUPLING, PIPE	2
19	PAOZZ	19207	12420064-002	HOSE ASSEMBLY, NONME	1
20	PAOZZ	93061	159F-4-4	ELBOW, PIPE TO TUBE	2
21	PAOZZ	0TE27	321620	PLUG, VENT	3
22	PAOZZ	81343	4-2 130140B	BUSHING, PIPE	1
23	PAOZZ	88044	AN914-2D	ELBOW, PIPE 1/4	1
24	PAOZZ	30780	3104-2-4B	ELBOW, PIPE TO TUBE	2
25	PAOZZ	81343	8-6 010302B	ELBOW, PIPE TO TUBE	3
26	PAOZZ	19207	12420062-004	HOSE ASSEMBLY, NONME	2
27	MOOZZ	19207	12420572-004X	TUBING, NONMETALLIC MAKE FROM HOSE P/N: NT-10004-BLK (79470), CUT TO LENGTH	1
28	PAOZZ	81343	4-4-100102BA	ADAPTER, STRAIGHT, PI	1
29	PAOZZ	81343	4-4-4 130424B	TEE, PIPE	1
30	PAOZZ	79470	1469X4X4	ELBOW, PIPE TO TUBE	1
31	PAOZZ	19207	12420064-001	HOSE ASSEMBLY, NONME	1
32	PAOZZ	19207	12420064-005	HOSE ASSEMBLY, NONME	1
33	PAOZZ	81343	4-2 010103B	ADAPTER, STRAIGHT, PI	1
34	PAOZZ	19207	12420063-004	HOSE ASSEMBLY, NONME	1

(1) ITEM NO	(2) SMR CODE	(3) FSCM	(4) PART NUMBER	(5) DESCRIPTION AND USABLE ON CODE (UOC)	(6) QTY
35	PAOZZ	19207	12420419-003	HOSE ASSEMBLY, NONME	1
36	PAOZZ	19207	12420063-002	HOSE ASSEMBLY, NONME	1
37	PAOZZ	81343	10-4 070102	ADAPTER, STRAIGHT, PI	4
38	PAOZZ	81343	8-6 010103BA	ADAPTER, STRAIGHT, PI	2
39	PAOZZ	81343	6-6 130137B	NIPPLE, PIPE	4
40	PAOZZ	19207	12420419-004	HOSE ASSEMBLY, NONME	1

END OF FIGURE

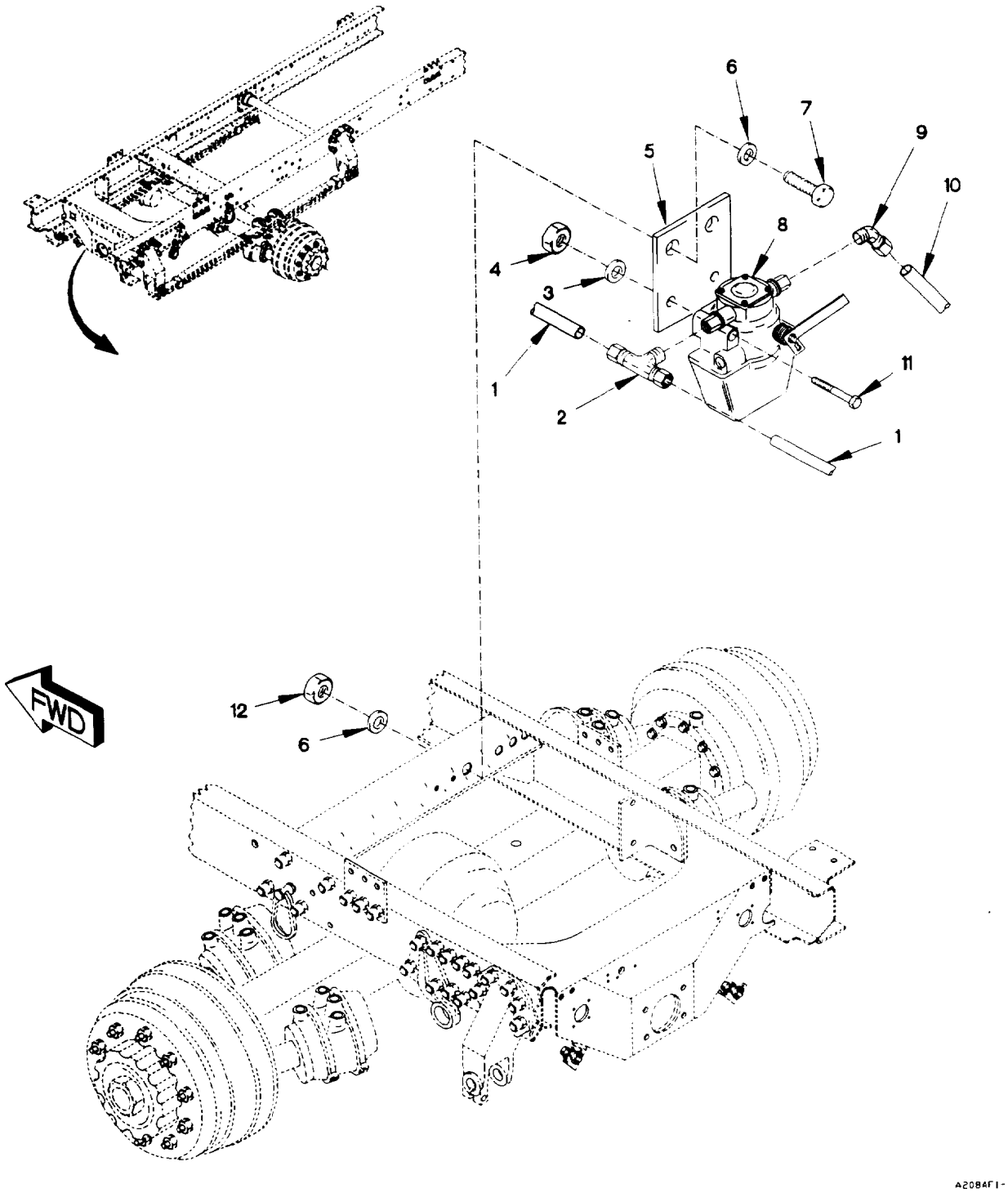

Figure 140. Load Sensing Valve, Hoses, and Fittings

(1) ITEM NO	(2) SMR CODE	(3) FSCM	(4) PART NUMBER	(5) DESCRIPTION AND USABLE ON CODE (UOC)		(6) QTY
				GROUP 1208: AIR BRAKE SYSTEM FIG. 140 LOAD SENSING VALVE, HOSES AND FITTINGS		
1	MOOZZ	19207	12420572-008X	HOSE, NONMETALLIC MAKE FROM HOSE P/N: C608-100BLK (13174), CUT TO LENGTH		1
2	PAOZZ	81343	8-8-4 100425BA	TEE, PIPE TO TUBE		1
3	PAOZZ	34914	990 3861	WASHER, FLAT M8.4		2
4	PAOZZ	19207	12414315-006	NUT, SELF-LOCKING, HE M8 X 1.25		2
5	PFOZZ	19207	12414578	PLATE, MOUNTING		1
6	PAOZZ	21969	A 13 DIN125-ST	WASHER, FLAT M13		4
7	PAOZZ	19207	12414309-048	BOLT, CLOSE TOLERANC M12 X 1.75 X 50		2
8	PAOZZ	06721	N-50016A	SENSOR, ANTI-LOCK BR		1
9	PAOZZ	81343	6-4 100302BA	ELBOW, PIPE TO TUBE		1
10	MOOZZ	19207	12420572-006X	TUBE, NONMETALLIC MAKE FROM HOSE P/N: J844TYBSIZE 3/8 BLACK (81343), CUT TO LENGTH	V	
11	PAOZZ	19207	12414419-104	SCREW, CAP, HEXAGON H M8 X 1.25 90		2
12	PAOZZ	19207	12414315-012	NUT, PLAIN, HEXAGON M12 X 1.75		2
				END OF FIGURE		

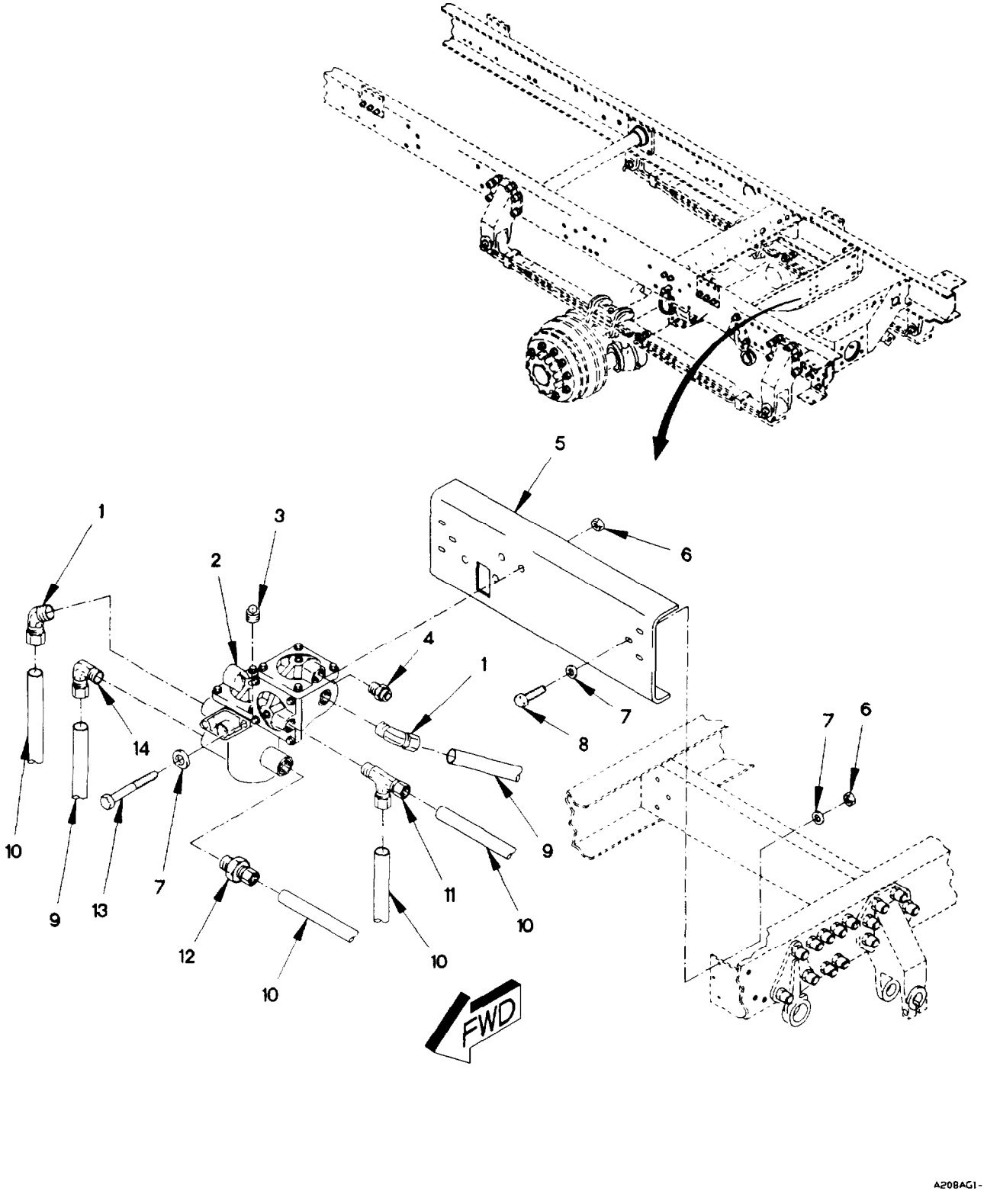

Figure 141. Air Brake Protection Valve, Hoses, and Fittings

(1) ITEM NO	(2) SMR CODE	(3) FSCM	(4) PART NUMBER	(5) DESCRIPTION AND USABLE ON CODE (UOC)		(6) QTY
				GROUP 1208: AIR BRAKE SYSTEM FIG. 141 AIR BRAKE PROTECTION SYSTEM HOSES, AND FITTINGS		
1	PAOZZ	81343	8-6 100302BA	ELBOW, PIPE TO TUBE		2
2	PAOZZ	06721	N-50012	VALVE, PROTECTING, MU		1
3	PAOZZ	96906	MS14314-2X	PLUG, PIPE		1
4	PAOZZ	06721	N-20455	VALVE, BLEEDER, HYDRA		1
5	PFOZZ	0FW39	12414411-004	BRAKE CONTROL VALVE PANEL		1
6	PAOZZ	19207	12414315-006	NUT, SELF-LOCKING, HE M8 X 1.25		8
7	PAOZZ	34914	990 3861	WASHER, FLAT M8.4		14
8	PAOZZ	81495	071 408 32	BOLT, MACHINE M8 X 1.25 X 25		6
9	MOOZZ	19207	12420572-006X	TUBE, NONMETALLIC MAKE FROM HOSE P/N: J844TYBSIZE 3/8 BLACK (81343), CUT TO LENGTH	V	
10	MOOZZ	19207	12420572-008X	HOSE, NONMETALLIC MAKE FROM HOSE P/N: C608-100BLK (13174), CUT TO LENGTH		1
11	PAOZZ	81343	6-6-6 100424BA	TEE, PIPE TO TUBE		1
12	PAOZZ	79470	1468X6X6	ADAPTER, STRAIGHT, PI		1
13	PAOZZ	56161	10503847	SCREW, CAP, HEXAGON H M8 X 1.25 X 70		2
14	PAOZZ	81343	6-6 100202BA	ELBOW, PIPE TO TUBE		1
				END OF FIGURE		

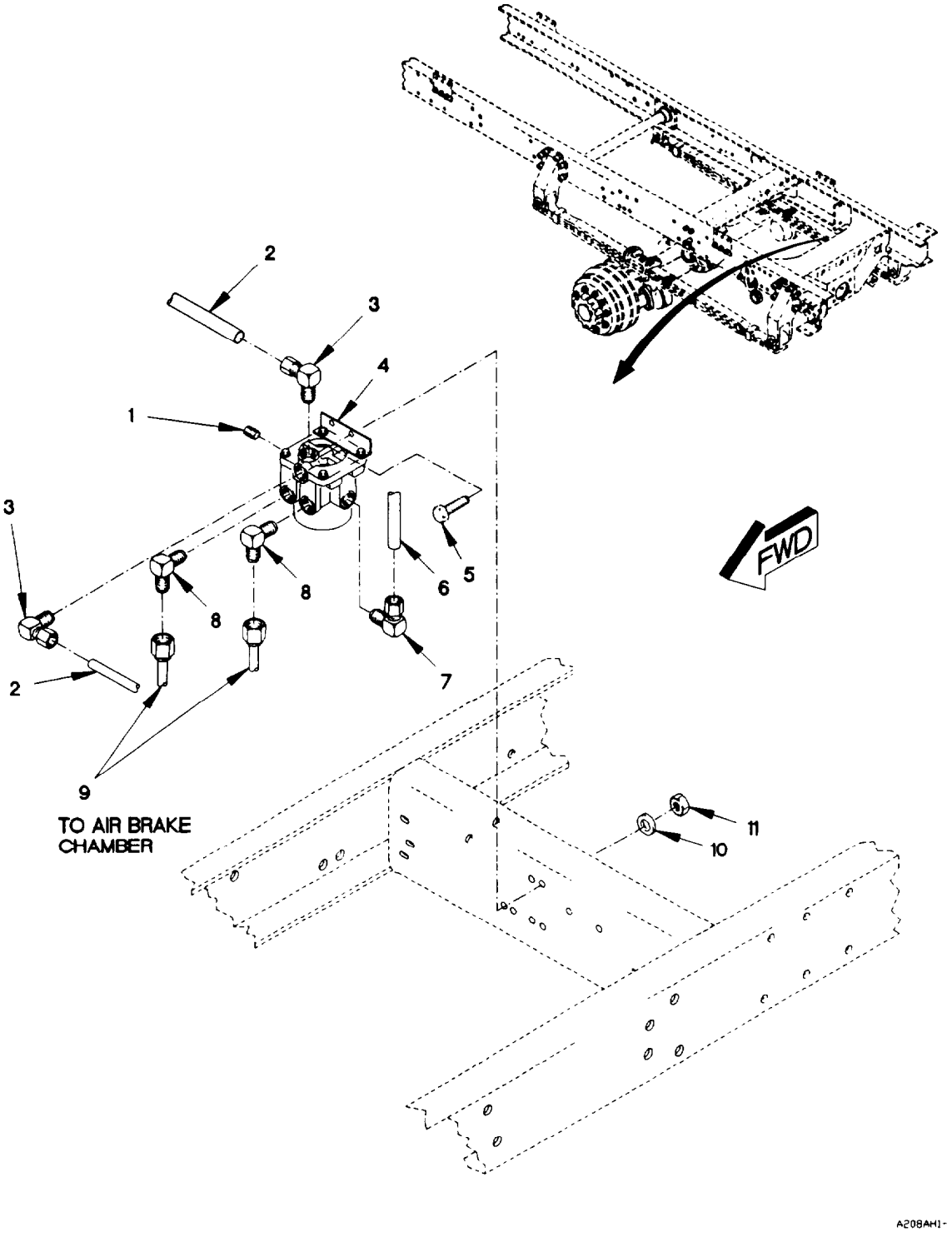

Figure 142. Anti-Compounding Relay Valve, Hoses, and Fittings

(1) ITEM NO	(2) SMR CODE	(3) FSCM	(4) PART NUMBER	(5) DESCRIPTION AND USABLE ON CODE (UOC)		(6) QTY
				GROUP 1208: AIR BRAKE SYSTEM FIG. 142 ANTI-COMPOUNDING RELAY VALVE, HOSES, AND FITTINGS		
1	PAOZZ	81343	8-130109E-S	PLUG, PIPE		1
2	MOOZZ	19207	12420572-006X	TUBE, NONMETALLIC MAKE FROM HOSE P/N: J844TYBSIZE 3/8 BLACK (81343), CUT TO LENGTH	V	
3	PAOZZ	81343	6-4 100202BA	ELBOW, PIPE TO TUBE		2
4	PAOZZ	06721	N-50024	VALVE, RELAY, AIR PRE		1
5	PAOZZ	81495	071 408 32	BOLT, MACHINE M8 X 1.25 X 25		2
6	MOOZZ	19207	12420572-008X	HOSE, NONMETALLIC MAKE FROM HOSE P/N: C608-100BLK (13174), CUT TO LENGTH		1
7	PAOZZ	81343	8-8 100202BA	ELBOW, PIPE TO TUBE		1
8	PAOZZ	81343	6-6 010202B (E1)	ELBOW, PIPE TO TUBE		2
9	PAOZZ	19207	12420062-003	HOSE ASSEMBLY, NONME		2
10	PAOZZ	34914	990 3861	WASHER, FLAT M8.4		2
11	PAOZZ	19207	12414315-006	NUT, SELF-LOCKING, HE M8 X 1.25		2
				END OF FIGURE		

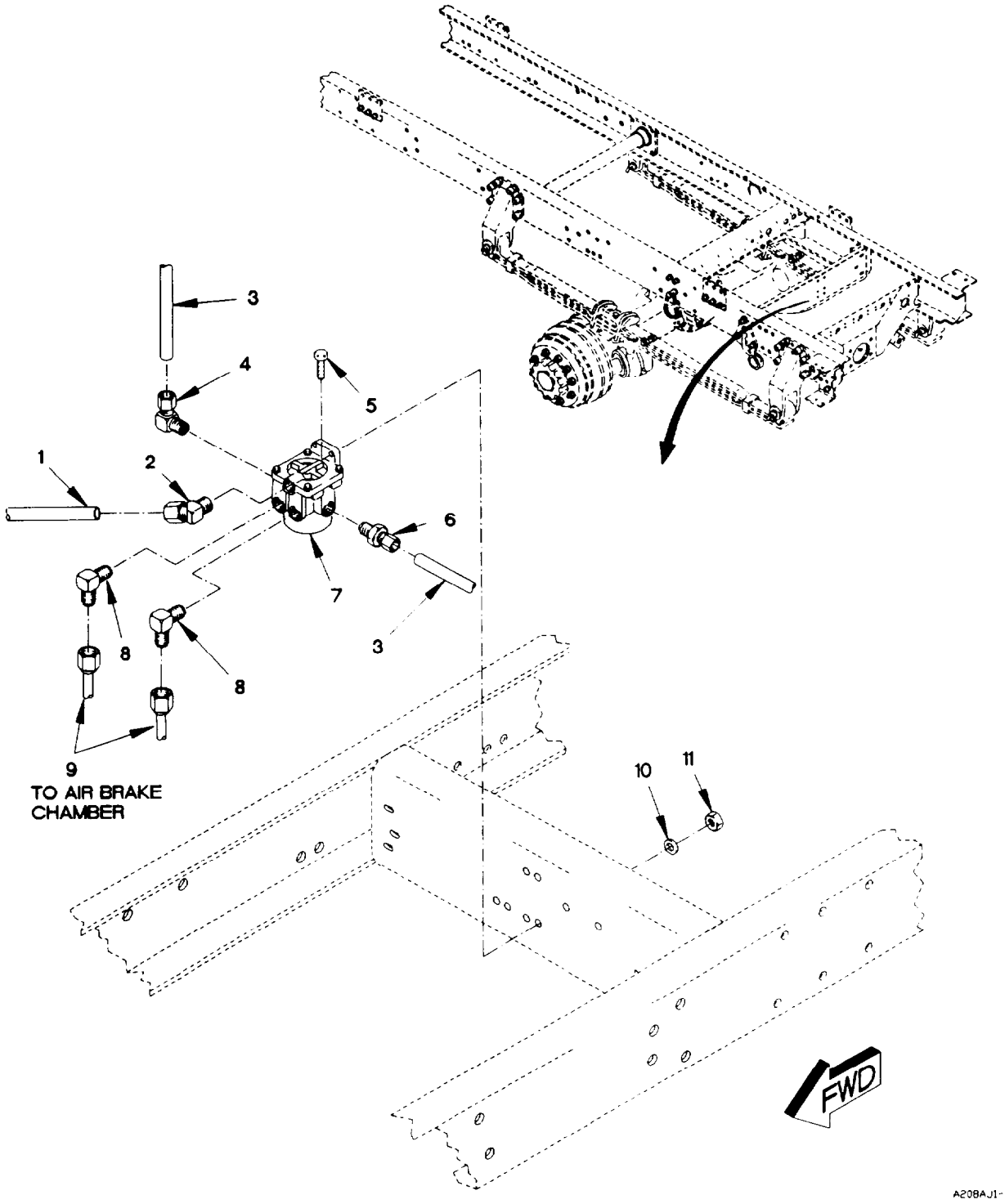

Figure 143. Air Relay Valve, Hoses, and Fittings

(1) ITEM NO	(2) SMR CODE	(3) FSCM	(4) PART NUMBER	(5) DESCRIPTION AND USABLE ON CODE (UOC)		(6) QTY
				GROUP 1208: AIR BRAKE SYSTEM FIG. 143 AIR RELAY VALVE, HOSES, AND FITTINGS		
1	MOOZZ	19207	12420572-006X	TUBE, NONMETALLIC MAKE FROM HOSE P/N: J844TYBSIZE 3/8 BLACK (81343), CUT TO LENGTH	V	
2	PAOZZ	81343	6-6 100302BA	ELBOW, PIPE TO TUBE		1
3	MOOZZ	19207	12420572-008X	HOSE, NONMETALLIC MAKE FROM HOSE P/N: C608-100BLK (13174), CUT TO LENGTH		1
4	PAOZZ	81343	8-8 100202BA	ELBOW, PIPE TO TUBE		1
5	PAOZZ	81495	071 408 32	BOLT, MACHINE M8 X 1.25 X 25		2
6	PAOZZ	81343	8-8 100102BA	ADAPTER, STRAIGHT, PI		1
7	PAOZZ	06721	N-50004	VALVE, RELAY, AIR PRE		1
8	PAOZZ	81343	6-6 010202B (E1)	ELBOW, PIPE TO TUBE		2
9	PAOZZ	19207	12420062-002	HOSE ASSEMBLY, NONME		2
10	PAOZZ	34914	990 3861	WASHER, FLAT M8.4		2
11	PAOZZ	19207	12414315-006	NUT, SELF-LOCKING, HE M8 X 1.25		2
				END OF FIGURE		

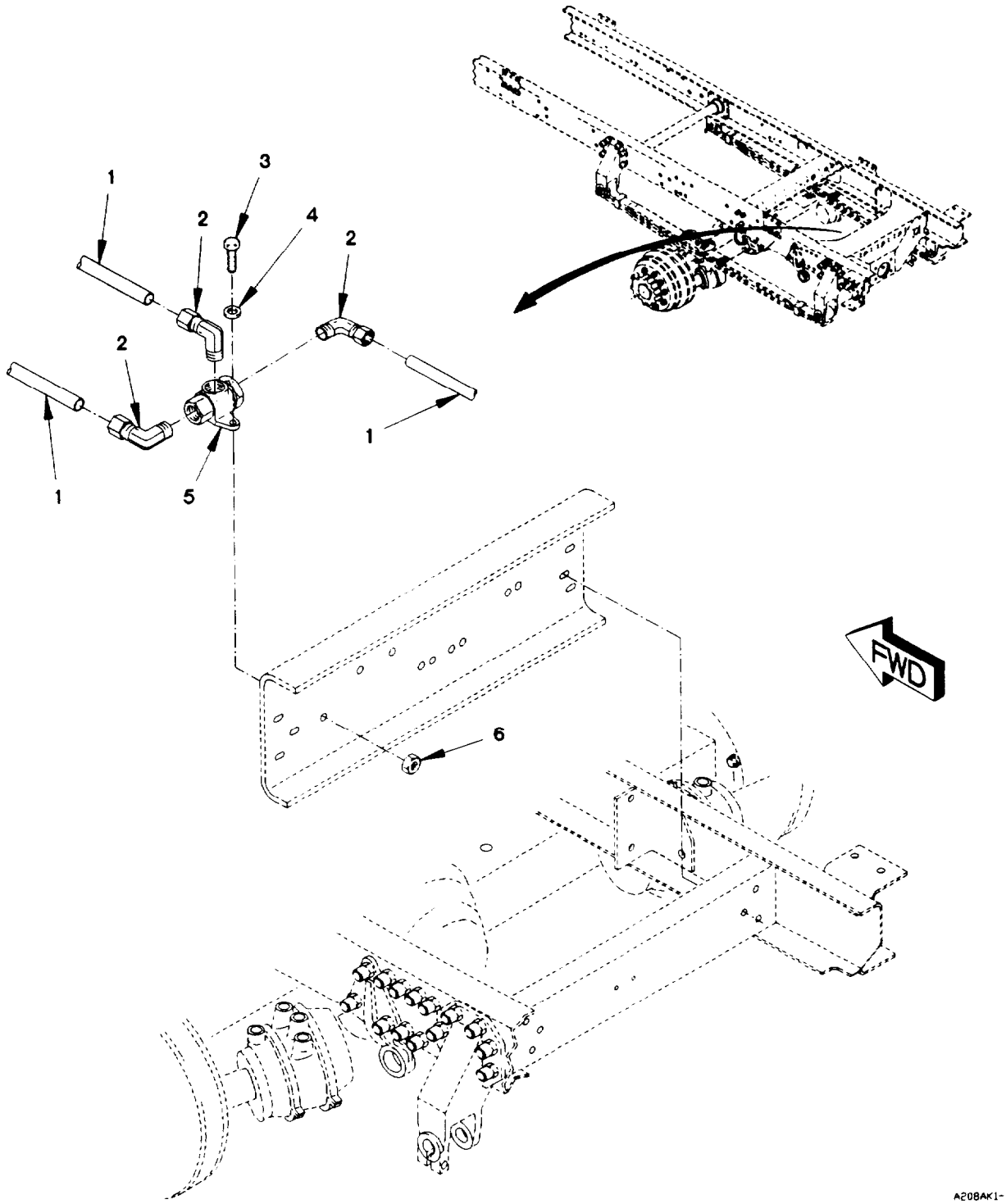

Figure 144. Two Way Check Valve, Hoses, and Fittings

(1) ITEM NO	(2) SMR CODE	(3) FSCM	(4) PART NUMBER	(5) DESCRIPTION AND USABLE ON CODE (UOC)	(6) QTY
				GROUP 1208: AIR BRAKE SYSTEM FIG. 144 TWO WAY CHECK VALVE, HOSES AND FITTINGS	
1	MOOZZ	19207	12420572-008X	HOSE, NONMETALLIC MAKE FROM HOSE P/N: C608-100BLK (13174), CUT TO LENGTH	1
2	PAOZZ	81343	8-6 100202BA	ELBOW, PIPE TO TUBE	3
3	PAOZZ	81495	071 408 32	BOLT, MACHINE M8 X 1.25 X 25	1
4	PAOZZ	34914	990 3861	WASHER, FLAT M8.4	1
5	PAOZZ	06721	N-50000	VALVE, CHECK	1
6	PAOZZ	19207	12414315-006	NUT, SELF-LOCKING, HE M8 X 1.25	1
				END OF FIGURE	

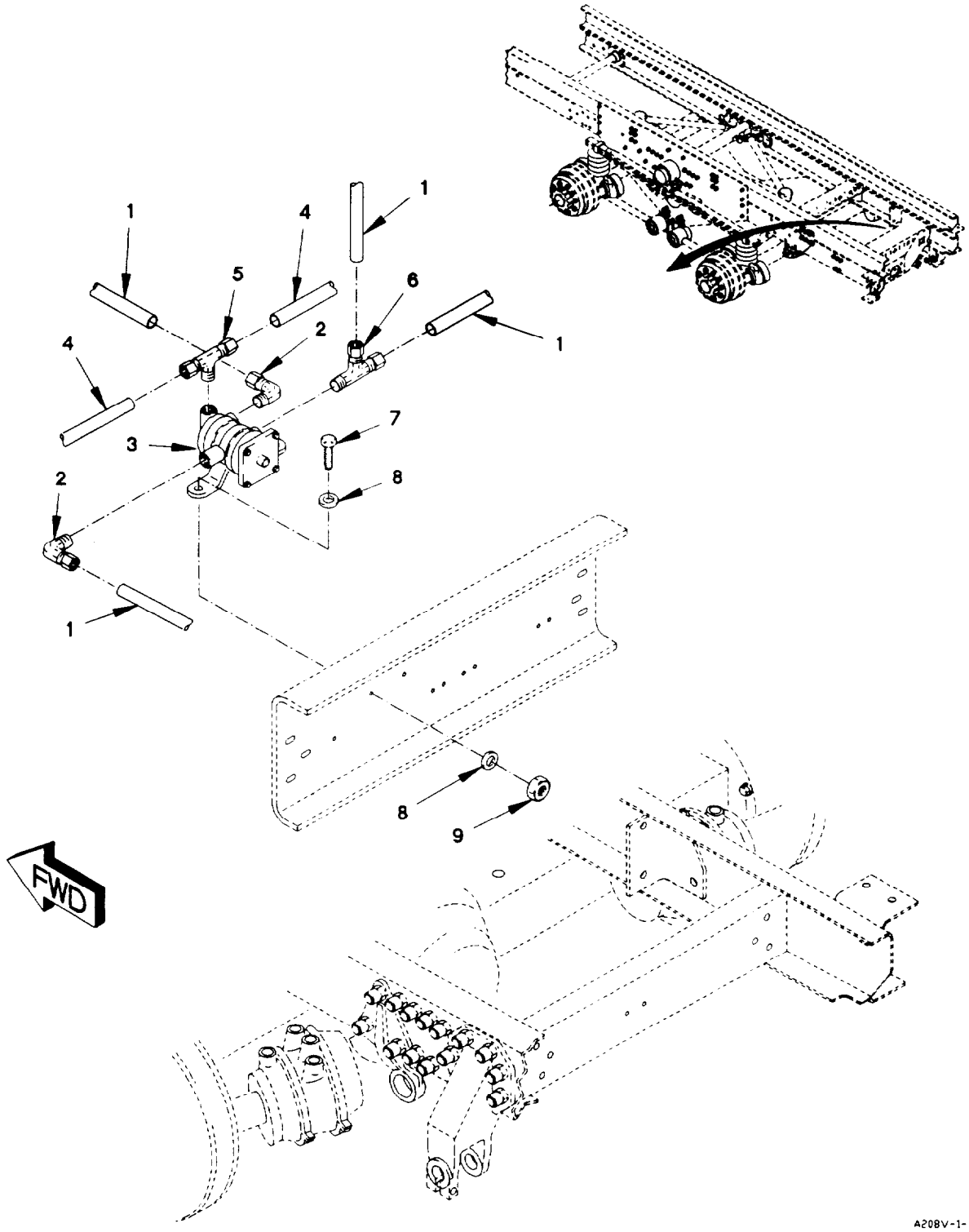

Figure 145. Inversion Valve, Hoses, and Fittings

(1) ITEM NO	(2) SMR CODE	(3) FSCM	(4) PART NUMBER	(5) DESCRIPTION AND USABLE ON CODE (UOC)	(6) QTY
				GROUP 1208: AIR BRAKE SYSTEM FIG. 145 INVERSION VALVE, HOSES AND FITTINGS	
1	MOOZZ	19207	12420572-006X	TUBE, NONMETALLIC MAKE FROM HOSE P/N: J844TYBSIZE 3/8 BLACK (81343), CUT TO LENGTH V	
2	PAOZZ	81343	6-4 100202BA	ELBOW, PIPE TO TUBE	1
3	PAOZZ	06721	N-50002	VALVE, BRAKE PNEUMAT	1
4	MOOZZ	19207	12420572-008X	HOSE, NONMETALLIC MAKE FROM HOSE P/N: C608-100BLK (13174), CUT TO LENGTH	1
5	PAOZZ	81343	8-8-4 100425BA	TEE, PIPE TO TUBE	1
6	PAOZZ	81343	6-4-6 100424BA	TEE, PIPE TO TUBE	1
7	PAOZZ	81495	071 408 32	BOLT, MACHINE M8 X 1.25 X 25	2
8	PAOZZ	34914	990 3861	WASHER, FLAT M8.4	4
9	PAOZZ	19207	12414315-006	NUT, SELF-LOCKING, HE M8 X 1.25	2
				END OF FIGURE	

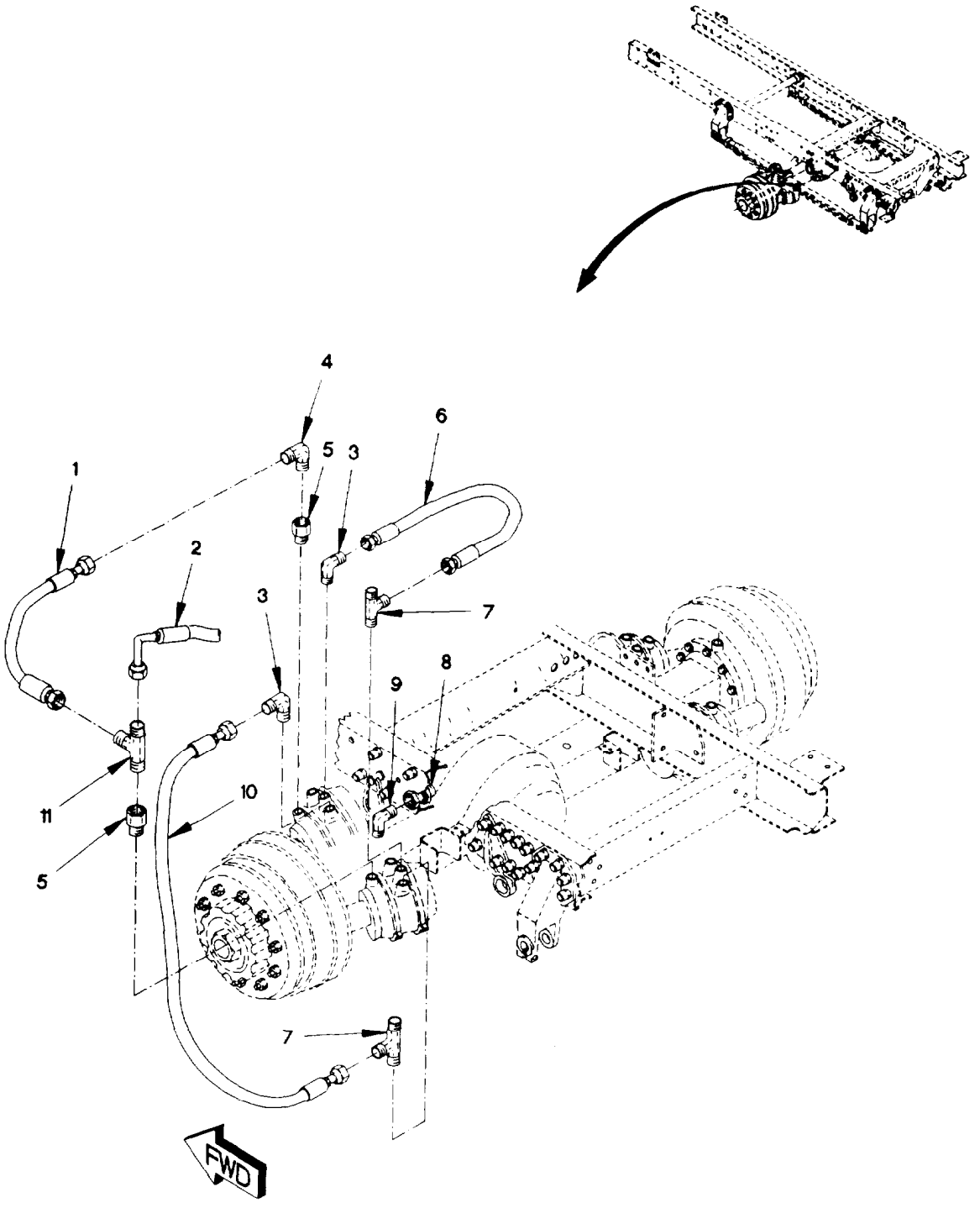

Figure 146. Rear Brake Hoses, Brackets, and Fittings

(1) ITEM NO	(2) SMR CODE	(3) FSCM	(4) PART NUMBER	(5) DESCRIPTION AND USABLE ON CODE (UOC)	(6) QTY
				GROUP 1208: AIR BRAKE SYSTEM FIG. 146 REAR BRAKE HOSES, BRACKETS, AND FITTINGS	
1	PAOZZ	19207	12420064-006	HOSE ASSEMBLY, NONME	2
2	PAOZZ	0FW39	12420062-005	HOSE ASSEMBLY, NONME	2
3	PAOZZ	93061	149F-6-4	ELBOW, PIPE TO TUBE	4
4	PAOZZ	81343	8-6 010202BA (E1)	ELBOW, PIPE TO TUBE	2
5	PAOZZ	81343	6-130139B	COUPLING, PIPE	4
6	PAOZZ	19207	12420064-009	HOSE ASSEMBLY, NONME	2
7	PAOZZ	93061	151F-6-4	TEE, PIPE TO TUBE	4
8	PAOZZ	30327	129-B-08X24	COUPLING, PIPE	2
9	PAOZZ	81343	8-8 010202B	ELBOW, PIPE TO TUBE	2
10	PAOZZ	19207	12420064-007	HOSE ASSEMBLY, NONME	2
11	PAOZZ	81343	8-6-8 010425BA	TEE, PIPE TO TUBE	2
				END OF FIGURE	

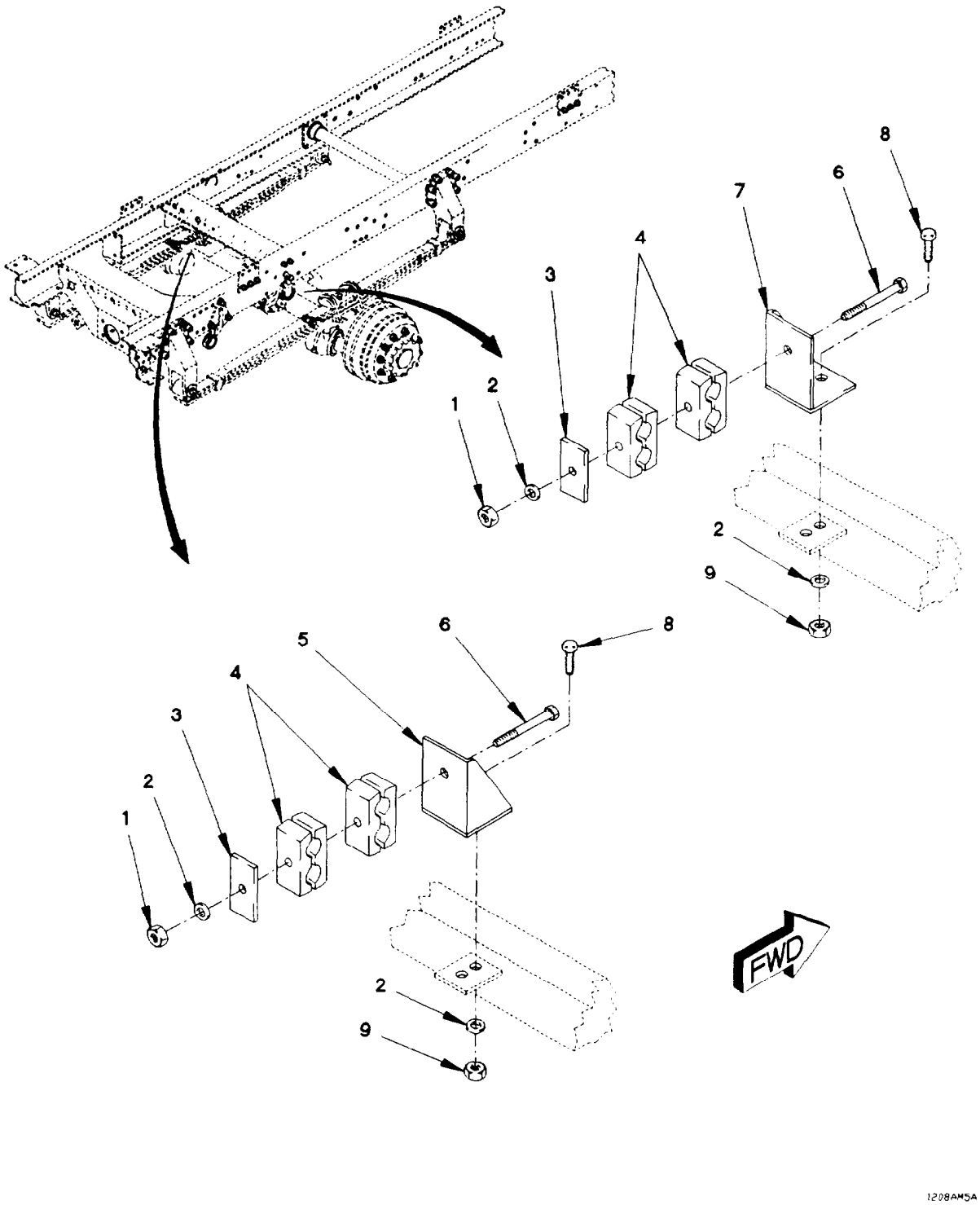

Figure 147. Rear Brake Hose Clamps, and Brackets

(1) ITEM NO	(2) SMR CODE	(3) FSCM	(4) PART NUMBER	(5) DESCRIPTION AND USABLE ON CODE (UOC)	(6) QTY
				GROUP 1208: AIR BRAKE SYSTEM FIG. 147 REAR BRAKE HOSE CLAMPS AND BRACKETS	
1	PAOZZ	19207	12414308-017	NUT, SELF-LOCKING, EX M8 X 1	2
2	PAOZZ	34914	990 3861	WASHER, FLAT M8.4	6
3	PAOZZ	0TE27	CPT3	STRAP, RETAINING	2
4	PAOZZ	0TE27	3222/190PPH	CLAMP, LOOP	4
5	PAOZZ	19207	12419914	PLATE, MOUNTING	1
6	PAOZZ	19207	12414551-010	BOLT, MACHINE M8 X 1 X 100	2
7	PAOZZ	19207	12419915	BRACKET, ANGLE	1
8	PAOZZ	81495	071 408 32	BOLT, MACHINE M8 X 1.25 X 25	4
9	PAOZZ	19207	12414315-006	NUT, SELF-LOCKING, HE M8 X 1.25	4
				END OF FIGURE	

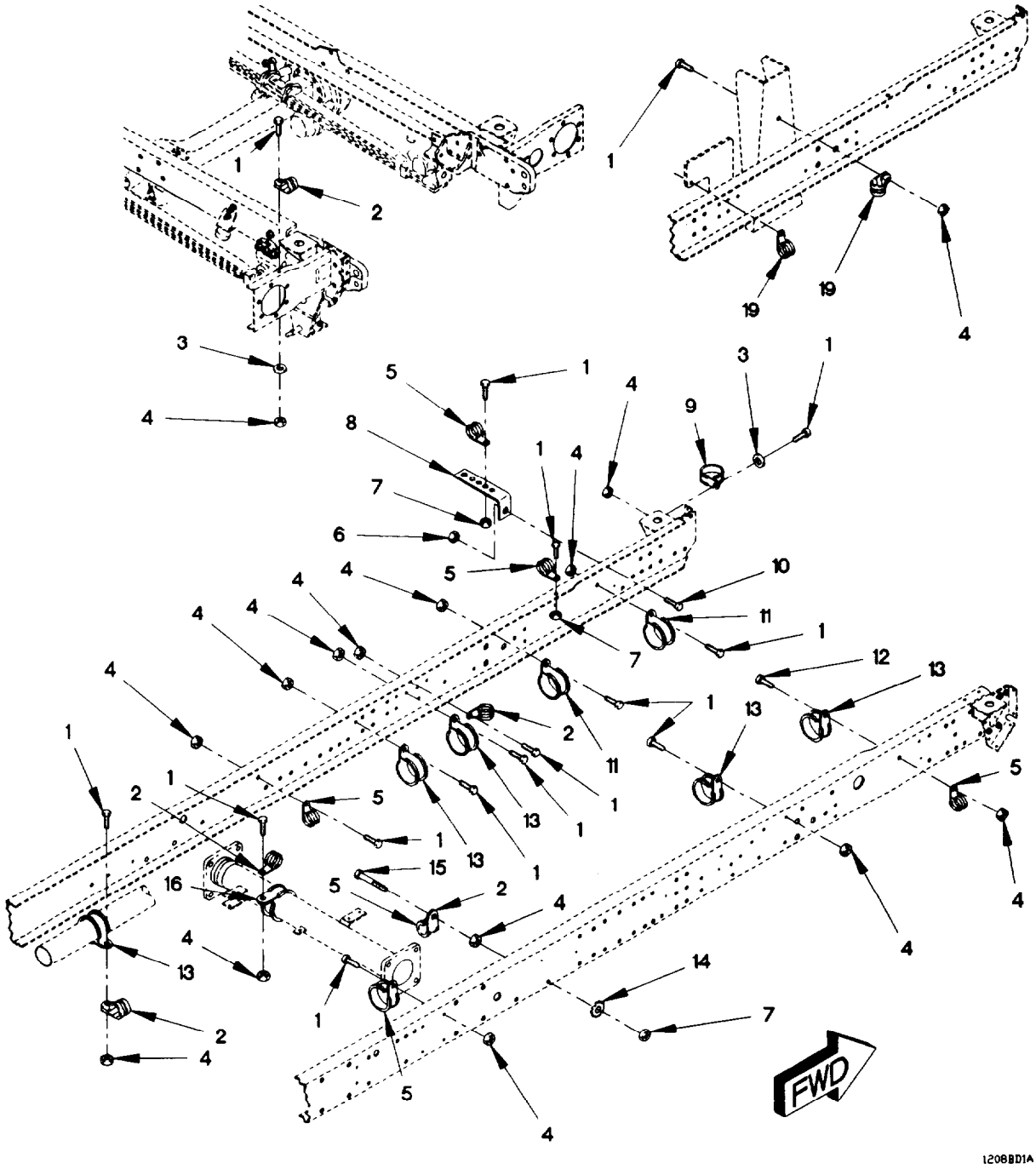

Figure 148. Pneumatic Hose Routing Loop Clamps and Brackets
(Sheet 1 of 4)

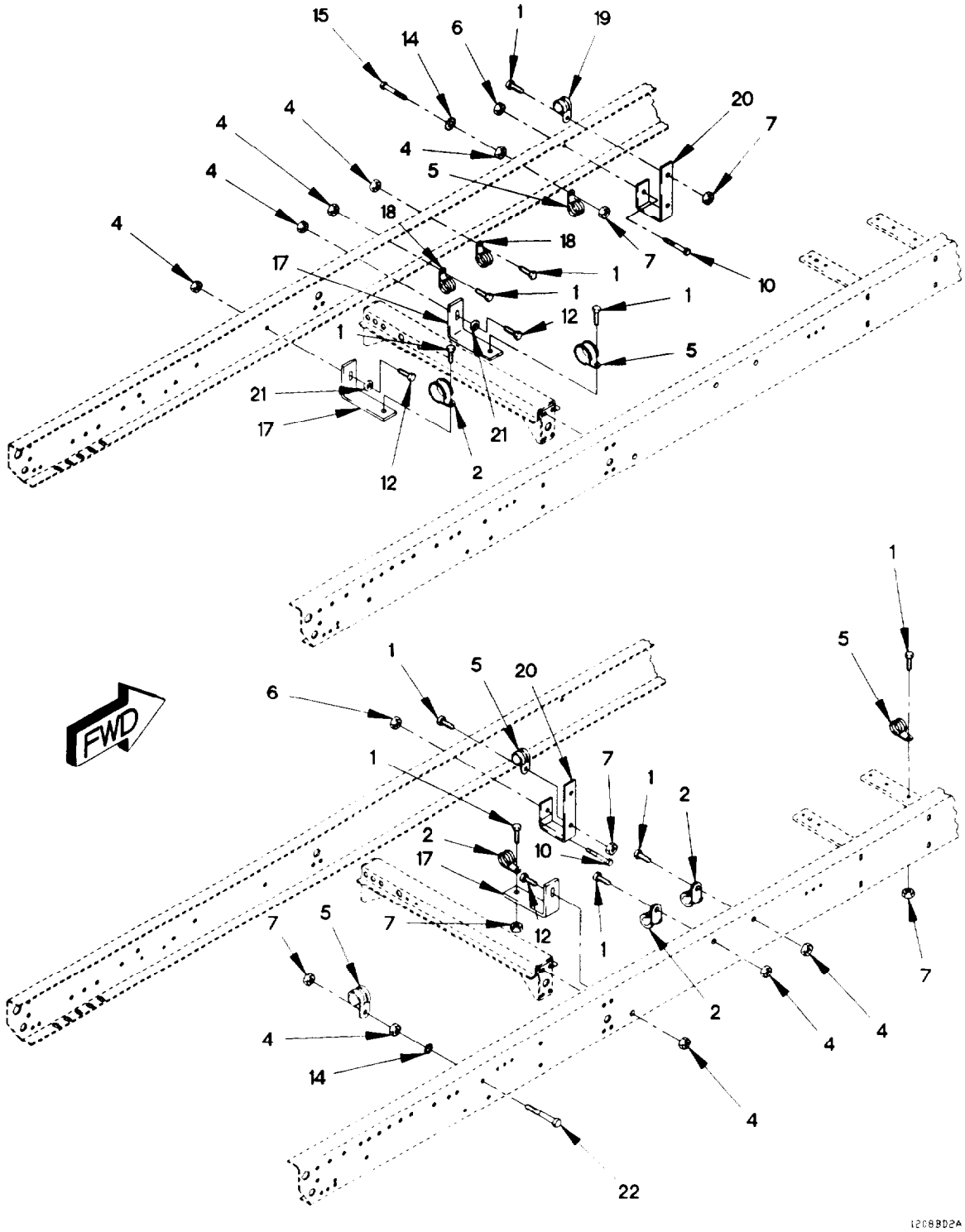

Figure 148. Pneumatic Hose Routing Loop Clamps and Brackets
(Sheet 2 of 4)

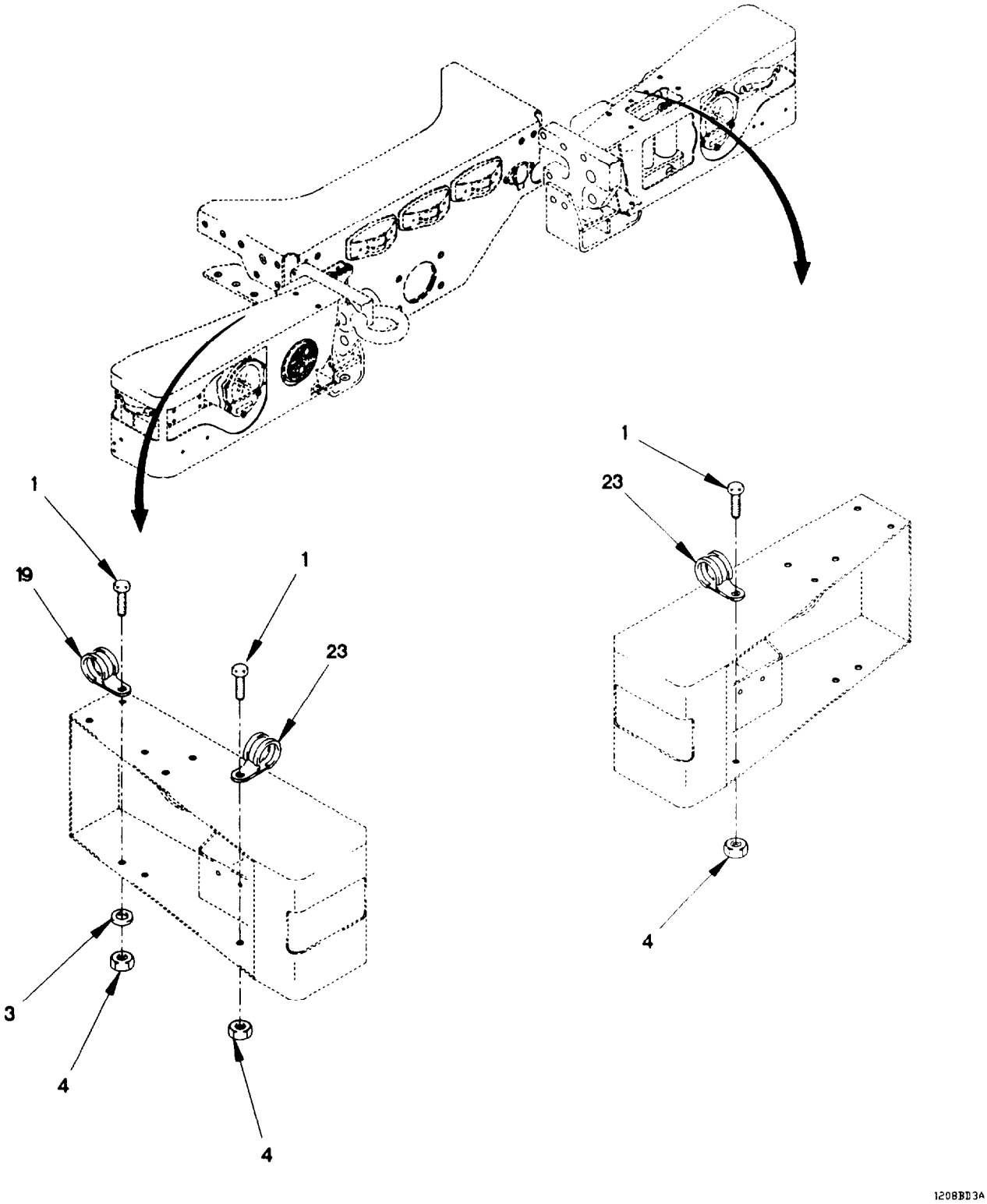

Figure 148. Pneumatic Hose Routing Loop Clamps and Brackets
(Sheet 3 of 4)

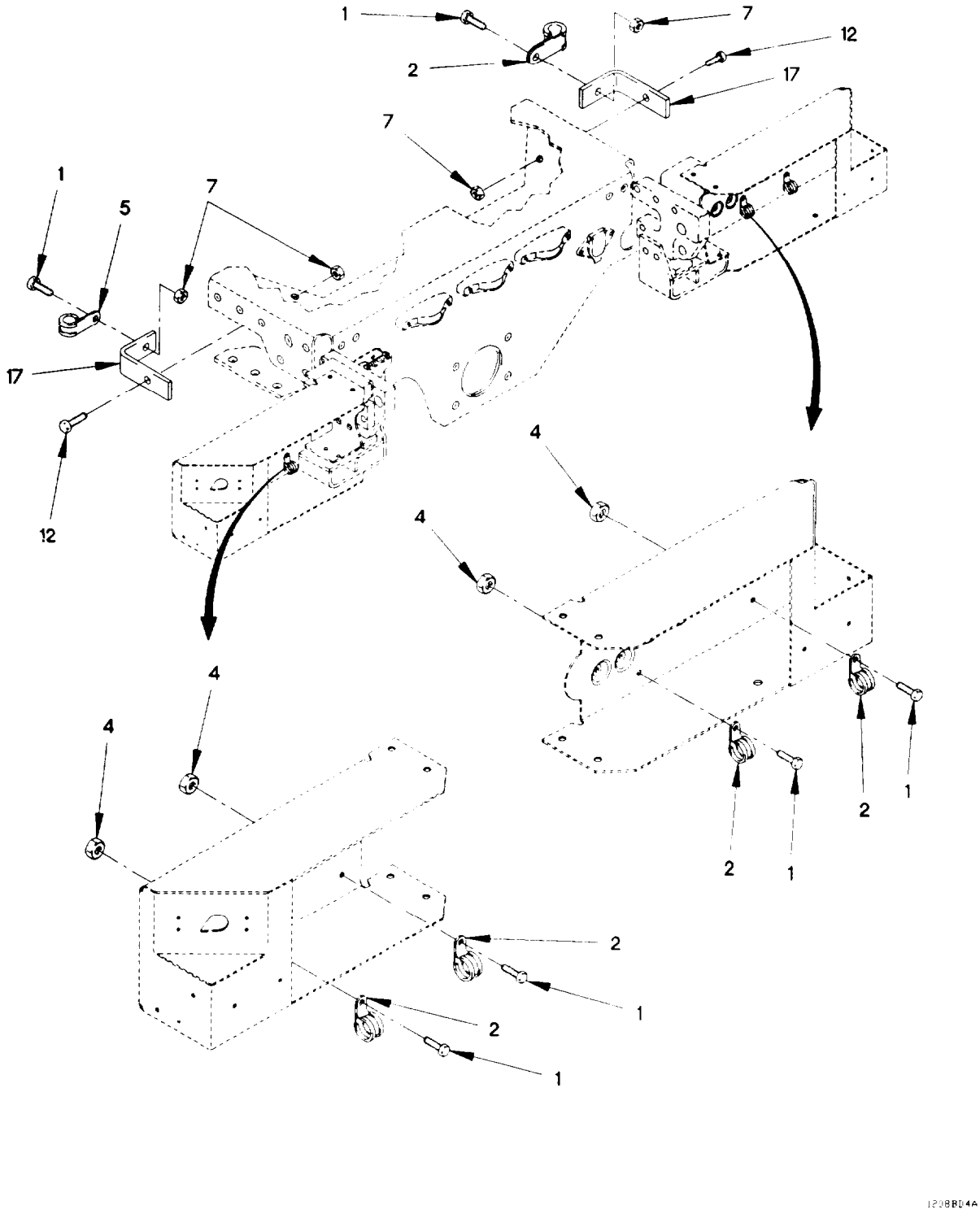

Figure 148. Pneumatic Hose Routing Loop Clamps and Brackets
(Sheet 4 of 4)

(1) ITEM NO	(2) SMR CODE	(3) FSCM	(4) PART NUMBER	(5) DESCRIPTION AND USABLE ON CODE (UOC)	(6) QTY
				GROUP 1208: AIR BRAKE SYSTEM FIG. 148 PNEUMATIC HOSE ROUTING LOOP CLAMPS AND BRACKETS	
1	PAOZZ	56161	10503805	SCREW, CAP, HEXAGON H M6 X 1 X 20	33
2	PAOZZ	18076	S630H-16	CLAMP, LOOP	13
3	PAOZZ	19207	12417975-006	SPACER, RING	3
4	PAOZZ	15526	DIN 934 ST M6	NUT, SELF-LOCKING, HE M6 X 1	31
5	PAOZZ	18076	S630H-24	CLAMP, LOOP, HVY DUTY	11
6	PAOZZ	19207	12414308-019	NUT, SELF-LOCKING, EX M10 X 1.5	2
7	PAOZZ	19207	12414308-002	NUT, SELF-LOCKING, EX M6 X 1	16
8	PAOZZ	19207	12418303	BRACKET, ANGLE	1
9	PAOZZ	18076	S630H-40	CLAMP, LOOP	1
10	PAOZZ	19207	12414307-064	BOLT, MACHINE M10 X 1.5 X 30	2
11	PAOZZ	18076	S630H-36	CLAMP, LOOP	2
12	PAOZZ	64678	000933 006058	SCREW, CAP, HEXAGON H M6 X 1 X 25 UOC:LAA,LAB,LAD,LWB,LWD	6
12	PAOZZ	64678	000933 006058	SCREW, CAP, HEXAGON H M6 X 1 X 25 UOC:LAC,LWC,	3
13	PAOZZ	18076	S630H-32	CLAMP, LOOP, HVY DUTY	6
14	PAOZZ	19207	12414570-015	WASHER, LOCK M6.4	3
15	PAOZZ	56161	10503770	SCREW, CAP, HEXAGON H M6 X 1 X 30 UOC:LAA,LAB,LAD,LWB,LWD	2
15	PAOZZ	56161	10503770	SCREW, CAP, HEXAGON H M6 X 1 X 30 UOC:LAC,LWC,	5
16	PAOZZ	18076	S463H-56	CLAMP, LOOP	1
17	PAOZZ	19207	12420411	BRACKET, ANGLE	5
18	PAOZZ	18076	S630H-20	CLAMP, LOOP	3
19	PAOZZ	18076	S630H-10	CLAMP, LOOP	6
20	PAOZZ	19207	12419910	BRACKET, DOUBLE ANGL UOC:LAA,LAB,LAD,LWB,LWD	2
20	PAOZZ	19207	12419910-001	BRACKET, DOUBLE ANGL UOC:LAC,LWC,	1
21	PAOZZ	19207	12417963-004	WASHER, FLAT M6	3
22	PAOZZ	19207	12414419-080	SCREW, CAP, HEXAGON H M6 X 1 X 40	1
23	PAOZZ	18076	S630H-12	CLAMP, LOOP, HVY DUTY	2

END OF FIGURE

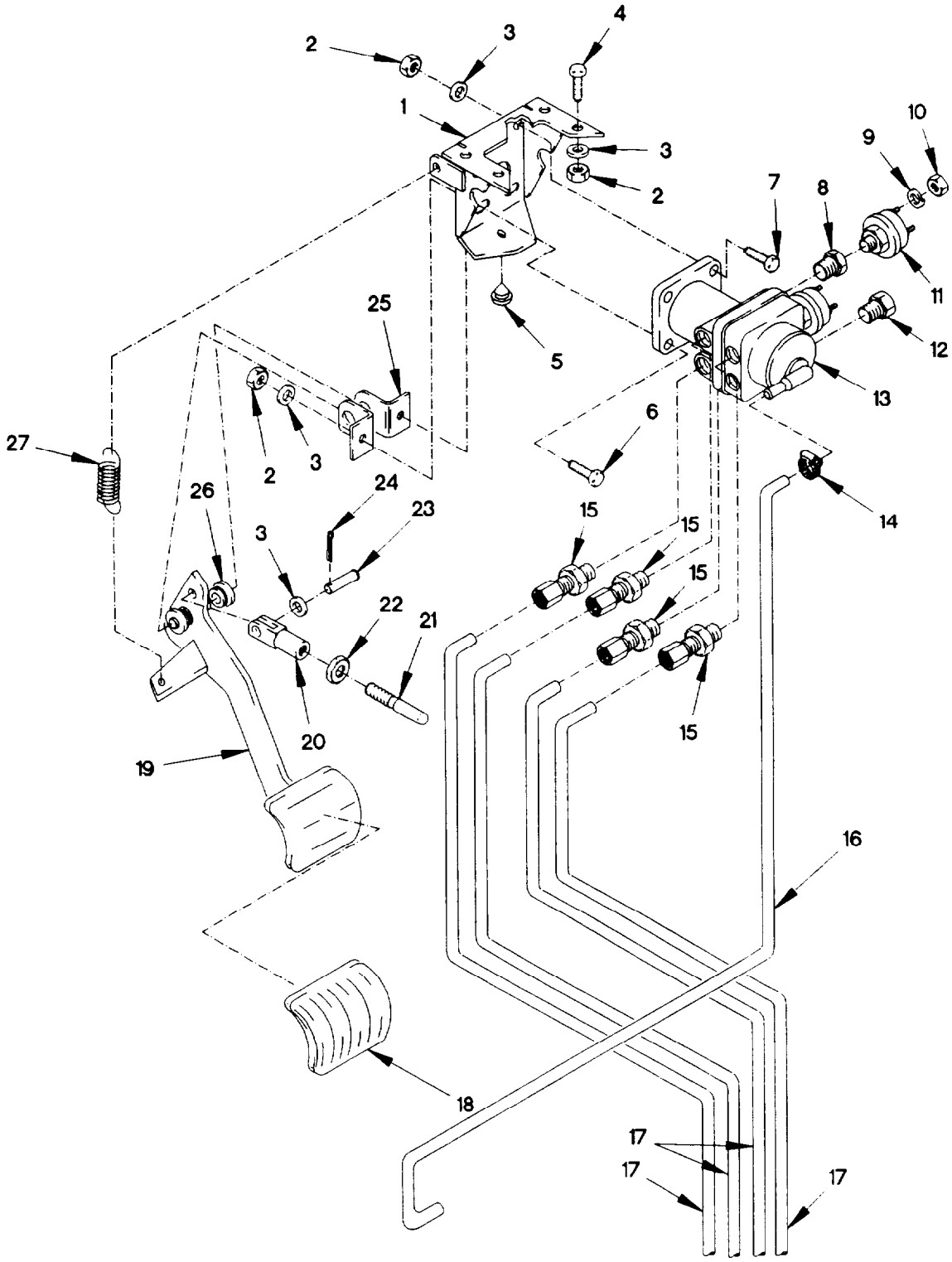

Figure 149. Brake Pedal, Foot Control Valve, Hoses, and Fittings

(1) ITEM NO	(2) SMR CODE	(3) FSCM	(4) PART NUMBER	(5) DESCRIPTION AND USABLE ON CODE (UOC)		(6) QTY
				GROUP 1208: AIR BRAKE SYSTEM FIG. 149 BRAKE PEDAL, FOOT CONTROL VALVE, HOSES, AND FITTINGS		
1	PAOZZ	19207	12420293	BRACKET, DOUBLE ANGL		1
2	PAOZZ	19207	12414315-006	NUT, SELF-LOCKING, HE M8 X 1.25		8
3	PAOZZ	34914	990 3861	WASHER, FLAT M8.4		9
4	PAOZZ	15526	933-M8X20	SCREW, CAP, HEXAGON H M8 X 1.25 X 20		4
5	PAOZZ	19207	12378750	MOUNT, RESILIENT		1
6	PAOZZ	81495	071 408 32	BOLT, MACHINE M8 X 1.25 X 25		2
7	PAOZZ	05523	42051-14	SCREW, CAP, HEXAGON H M8 X 1.25 X 14		2
8	PAOZZ	81343	6-4 130140C	BUSHING, PIPE		2
9	PAOZZ	96906	MS35338-43	WASHER, LOCK NO. 10		4
10	PAOZZ	96906	MS35649-103	NUT, PLAIN, HEXAGON 3/16 X 24		4
11	PAOZZ	06721	N-30255	SWITCH, STOPLIGHT, AU		2
12	PAOZZ	96906	MS14314-3X	PLUG, PIPE 3/8-27NPT		2
13	PAOZZ	78500	461 315 161 0	VALVE, TREADLE		1
14	PAOZZ	81343	SAE J1508-06	CLAMP, HOSE		1
15	PAOZZ	79470	1468X8	ADAPTER, STRAIGHT, PI		4
16	MOOZZ	19207	12420438	HOSE MAKE FROM HOSE P/N: MILH8796 (70628) X 1169MM LONG	V	
17	MOOZZ	19207	12420572-008X	HOSE, NONMETALLIC MAKE FROM HOSE P/N: C608-100BLK (13174), CUT TO LENGTH		1
18	PAOZZ	19207	12417585	PAD, PEDAL		1
19	PAOZZ	19207	12417993	PEDAL, CONTROL		1
20	PAOZZ	0FW39	12419164-001	CLEVIS, ROD END		1
21	PAOZZ	19207	12419163	SHAFT, STRAIGHT		1
22	PAOZZ	1FH08	DIN555M8	NUT, PLAIN, HEXAGON M8 X 1.25		1
23	PAOZZ	96906	MS20392-4P25	PIN, STRAIGHT		1
24	PAOZZ	94135	12Z5056-35	PIN, COTTER		1
25	PAOZZ	19207	12420294	BRACKET, ANGLE		2
26	PAOZZ	19207	12419869	BUSHING, SLEEVE		2
27	PAOZZ	0FW39	12417518-001	SPRING, HELICAL, TORS		1
				END OF FIGURE		

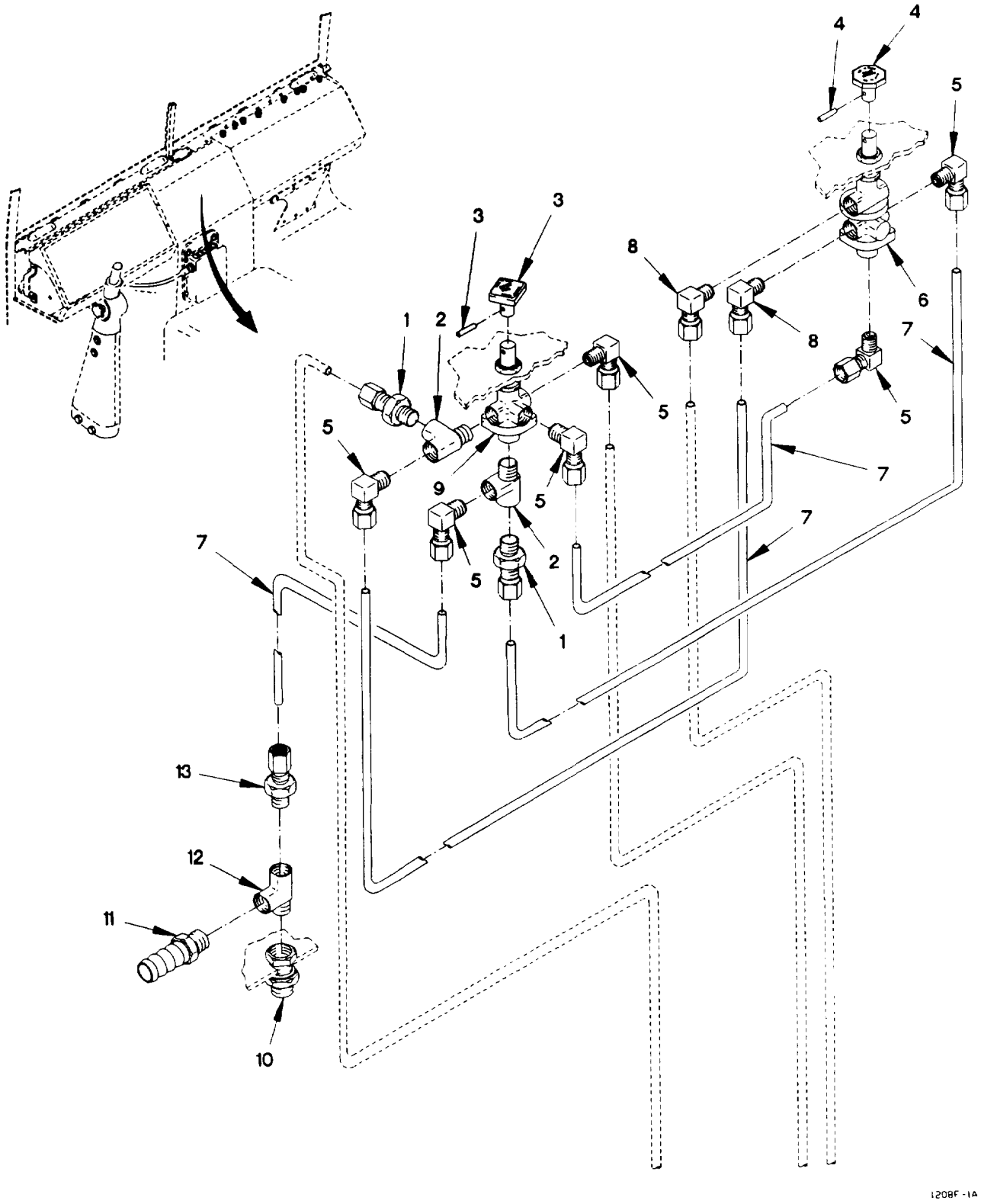

Figure 150. Park and Trailer Air Supply Valves, Hoses, and Fittings

(1) ITEM NO	(2) SMR CODE	(3) FSCM	(4) PART NUMBER	(5) DESCRIPTION AND USABLE ON CODE (UOC)		(6) QTY
				GROUP 1208: AIR BRAKE SYSTEM FIG. 150 PART AND TRAILER AIR SUPPLY VALVES, HOSES, AND FITTINGS		
1	PAOZZ	81343	6-2 100102BA	ADAPTER, STRAIGHT, PI		2
2	PAOZZ	30780	1-8MR0S	TEE, PIPE		2
3	PAOZZ	06721	KN-20901	KNOB SYSTEM PARK (INCLUDES PIN)		1
4	PAOZZ	06721	KN-20900	KNOB TRAILER AIR SUPPLY (INCLUDES PIN)		1
5	PAOZZ	81343	6-2 100202BA	ELBOW, PIPE TO TUBE		6
6	PAOZZ	06721	N-30263	VALVE, BRAKE PNEUMAT TRAILER AIR SUPPLY		1
7	MOOZZ	19207	12420572-006X	TUBE, NONMETALLIC MAKE FROM HOSE P/N: J844TYBSIZE 3/8 BLACK (81343), CUT TO LENGTH	V	
8	PAOZZ	81343	6-4 100202BA	ELBOW, PIPE TO TUBE		2
9	PAOZZ	06721	N30262	VALVE, BRAKE PNEUMAT SYSTEM PARK		1
10	PAOZZ	93061	207ACBH-6	COUPLING, PIPE		1
11	PAOZZ	0TE27	12510-6	ADAPTER, STRAIGHT, PI		1
12	PAOZZ	81343	6-6-6 130424B	TEE, PIPE		1
13	PAOZZ	79470	1468X6X6	ADAPTER, STRAIGHT, PI		2
				END OF FIGURE		

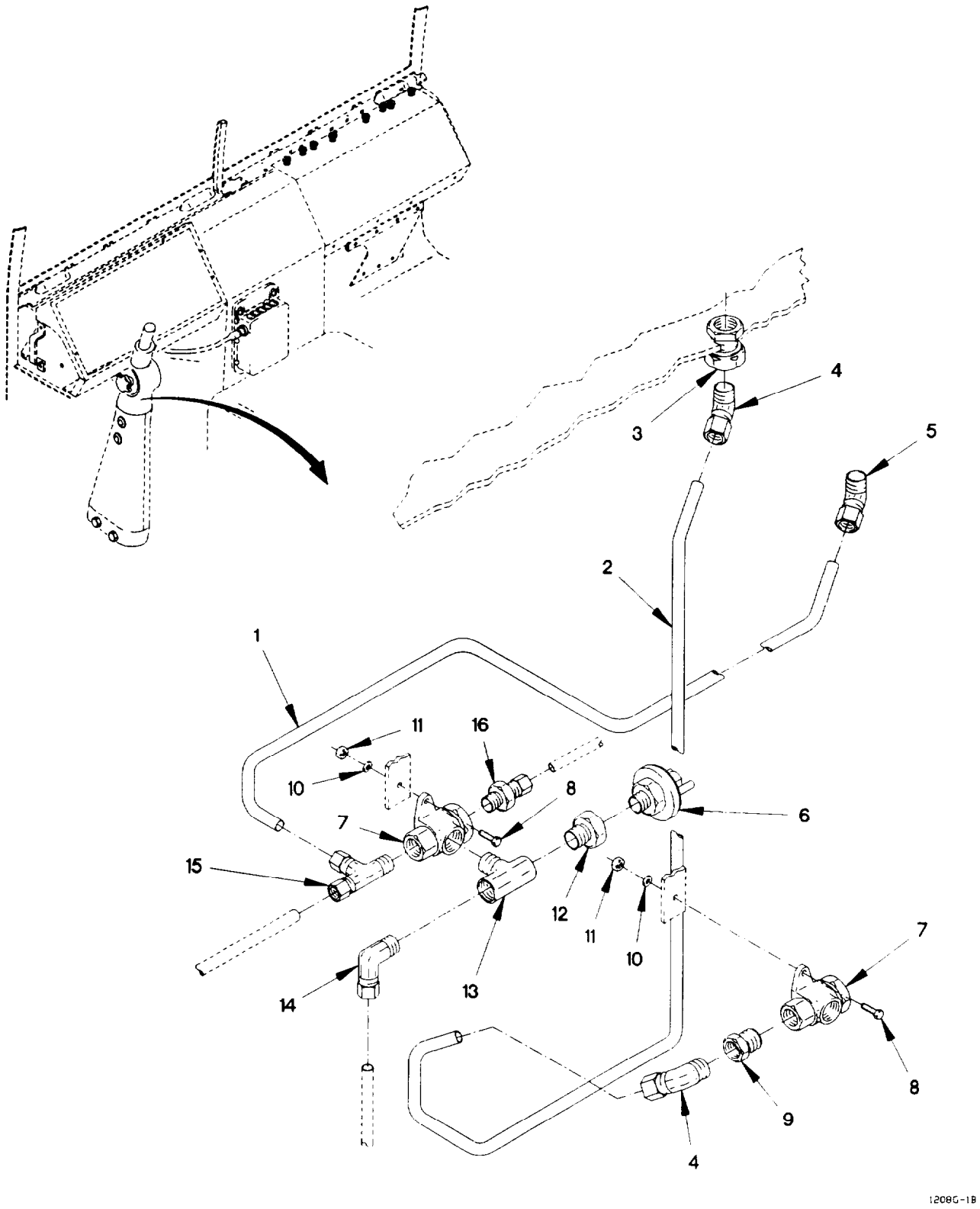

Figure 151. Low Pressure Transmitter Two Way Check Valves, Hoses, and Fittings

(1) ITEM NO	(2) SMR CODE	(3) FSCM	(4) PART NUMBER	(5) DESCRIPTION AND USABLE ON CODE (UOC)	(6) QTY
				GROUP 1208: AIR BRAKE SYSTEM FIG. 151 LOW PRESSURE TRANSMITTER, TWO WAY CECK VALVES, HOSES, AND FITTINGS	
1	MOOZZ	19207	12420572-006X	TUBE, NONMETALLIC MAKE FROM HOSE P/N: J844TYBSIZE 3/8 BLACK (81343), CUT TO LENGTH	V
2	MOOZZ	19207	12420572-008X	HOSE, NONMETALLIC MAKE FROM HOSE P/N: C608-100BLK (13174), CUT TO LENGTH	1
3	PAOZZ	93061	207ACBH-6	COUPLING, PIPE	1
4	PAOZZ	81343	8-6 100302BA	ELBOW, PIPE TO TUBE	2
5	PAOZZ	81343	6-4 100302BA	ELBOW, PIPE TO TUBE	1
6	PAOZZ	19207	12414243	SWITCH, PRESSURE	1
7	PAOZZ	06721	N-50000	VALVE, CHECK	2
8	PAOZZ	05523	42051-14	SCREW, CAP, HEXAGON H M8 X 1.25 X 14	2
9	PAOZZ	81343	6-6 100202BA	ELBOW, PIPE TO TUBE	1
10	PAOZZ	19207	12417975-008	WASHER, FLAT	2
11	PAOZZ	19207	12414315-006	NUT, SELF-LOCKING, HE M8 X 1.25	2
12	PAOZZ	79470	3226X2	BUSHING, PIPE	1
13	PAOZZ	81343	6-6-6-130425B	TEE, PIPE	1
14	PAOZZ	81343	8-6 100202BA	ELBOW, PIPE TO TUBE	1
15	PAOZZ	81343	6-6-6 100424BA	TEE, PIPE TO TUBE	1
16	PAOZZ	79470	1468X8	ADAPTER, STRAIGHT, PI	1
				END OF FIGURE	

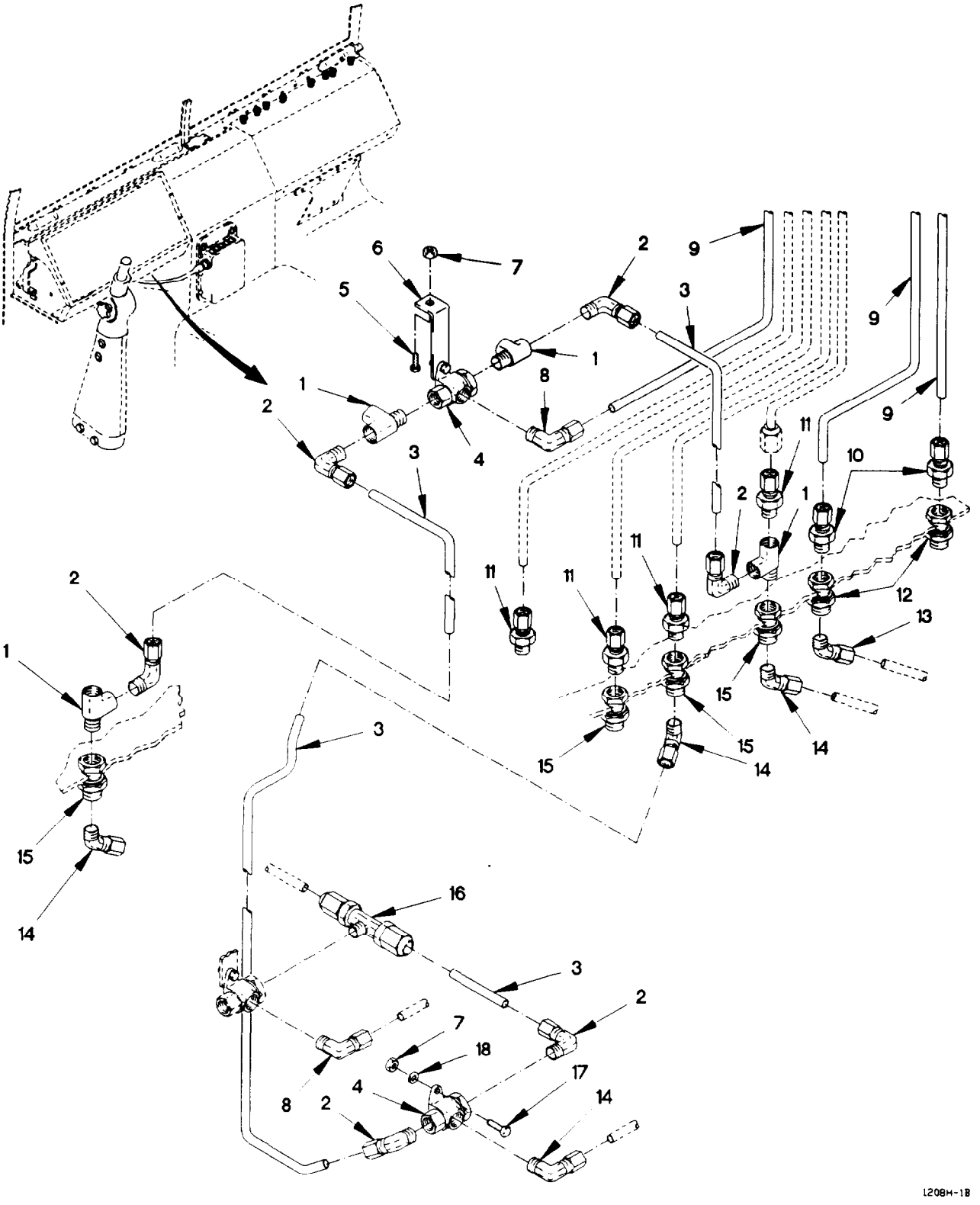

Figure 152. Park Control, Emergency/Service Gladhand Two Way Check Valve, Hoses, and Fittings

(1) ITEM NO	(2) SMR CODE	(3) FSCM	(4) PART NUMBER	(5) DESCRIPTION AND USABLE ON CODE (UOC)	(6) QTY
				GROUP 1208: AIR BRAKE SYSTEM FIG. 152 PARK CONTROL, EMERGENCY/SERVICE GLANDHAND TWO WAY CHECK VALVE, HOSES, AND FITTINGS	
1	PAOZZ	81343	6-6-6 130424B	TEE, PIPE	4
2	PAOZZ	81343	8-6 100202BA	ELBOW, PIPE TO TUBE	6
3	MOOZZ	19207	12420572-008X	HOSE, NONMETALLIC MAKE FROM HOSE P/N: C608-100BLK (13174) CUT TO LENGTH	1
4	PAOZZ	06721	N-50000	VALVE, CHECK	2
5	PAOZZ	15526	933-M8X20	SCREW, CAP, HEXAGON H M8 X 1.25 X 20	1
6	PAOZZ	19207	12419907	BRACKET, ANGLE	1
7	PAOZZ	19207	12414315-006	NUT, SELF-LOCKING, HE M8 X 1.25	2
8	PAOZZ	81343	6-6 100202BA	ELBOW, PIPE TO TUBE	2
9	MOOZZ	19207	12420572-006X	TUBE, NONMETALLIC MAKE FROM HOSE P/N J844TYBSIZE 3/8 BLACK (81343), CUT TO LENGTH	V
10	PAOZZ	81343	6-4 100102BA	ADAPTER, STRAIGHT, PI	2
11	PAOZZ	79470	1468X8	ADAPTER, STRAIGHT, PI	4
12	PAOZZ	9361	207ACBHS-4	COUPLING, PIPE	2
13	PAOZZ	81343	6-4 100302BA	ELBOW, PIPE TO TUBE	1
14	PAOZZ	81343	8-6 100302BA	ELBOW, PIPE TO TUBE	3
15	PAOZZ	93061	207ACBH-6	COUPLING, PIPE	4
16	PAOZZ	93061	272NTA-8-6	TEE, PIPE TO TUBE	1
17	PAOZZ	05523	42051-14	SCREW, CAP, HEXAGON H M8 X 1.25 X 14	1
18	PAOZZ	19207	12417975-008	WASHER, FLAT	1
				END OF FIGURE	

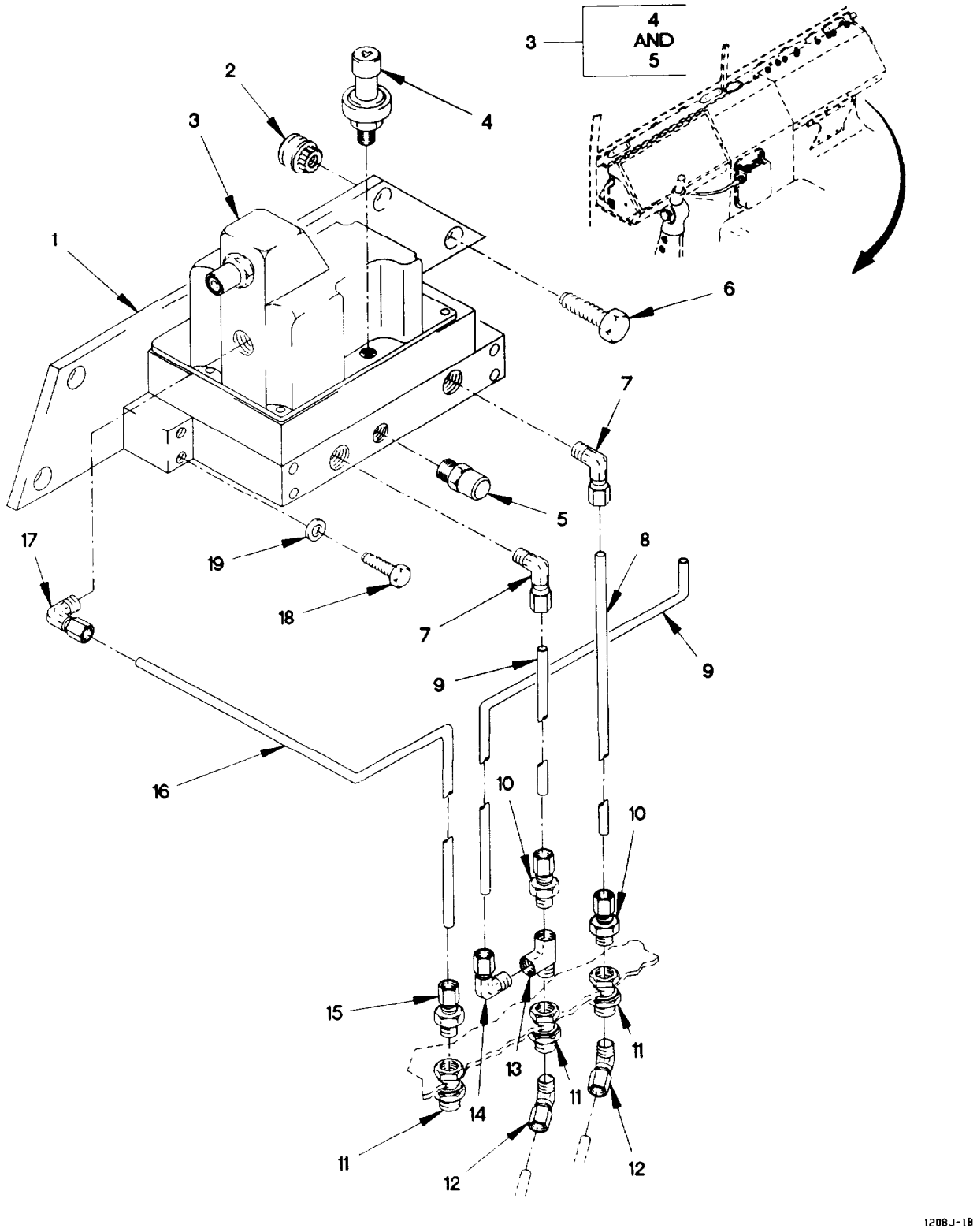

Figure 153. Manifold Valve, Hoses, and Fittings

(1) ITEM NO	(2) SMR CODE	(3) FSCM	(4) PART NUMBER	(5) DESCRIPTION AND USABLE ON CODE (UOC)		(6) QTY
				GROUP 1208: AIR BRAKE SYSTEM FIG. 153 MANIFOLD VALVE, HOSES AND FITTINGS		
1	PAOZZ	19207	12419844	BRACKET, MOUNTING		1
2	PAOZZ	84256	ALS3-610-4.2	NUT, PLAIN, CLINCH M6X1.0 (GRIP RANGE 0.7 - 4.20)		4
3	PAOZZ	52304	673219	VALVE, REGULATING, SY		1
4	PAOZZ	52304	673221	.TRANSDUCER, PRESSURE		1
5	PAOZZ	52304	673201	.VALVE, RELIEF		1
6	PAOZZ	15526	DIN933-M6X16-8.8 -A4C	SCREW, CAP, HEXAGON H M6 X 1 X 16		4
7	PAOZZ	81343	8-4 100202BA	ELBOW, PIPE TO TUBE		2
8	MOOZZ	19207	12420572-008X	HOSE, NONMETALLIC MAKE FROM HOSE P/N: C608-100BLK (13174), CUT TO LENGTH		1
9	MOOZZ	19207	12420572-004X	TUBING, NONMETALLIC MAKE FROM HOSE P/N: NT-10004-BLK (79470), CUT TO LENGTH	V	
10	PAOZZ	79470	1468X8	ADAPTER, STRAIGHT, PI		2
11	PAOZZ	93061	207ACBH-6	COUPLING, PIPE		3
12	PAOZZ	81343	8-6 100302BA	ELBOW, PIPE TO TUBE		2
13	PAOZZ	81343	6-6-6 130424B	TEE, PIPE		1
14	PAOZZ	81343	4-6 100202BA	ELBOW, PIPE TO TUBE		1
15	PAOZZ	79470	1468X6X6	ADAPTER, STRAIGHT, PI		1
16	MOOZZ	19207	12420572-006X	TUBE, NONMETALLIC MAKE FROM HOSE P/N J844TYBSIZE 3/8 BLACK (81343), CUT TO LENGTH	V	
17	PAOZZ	81343	6-6 100202BA	ELBOW, PIPE TO TUBE		1
18	PAOZZ	19207	12414309-022	SCREW, CAP, HEXAGON H M6 X 1.0 X 35		4
19	PAOZZ	19200	12524631-1	WASHER, FLAT M6		4
				END OF FIGURE		

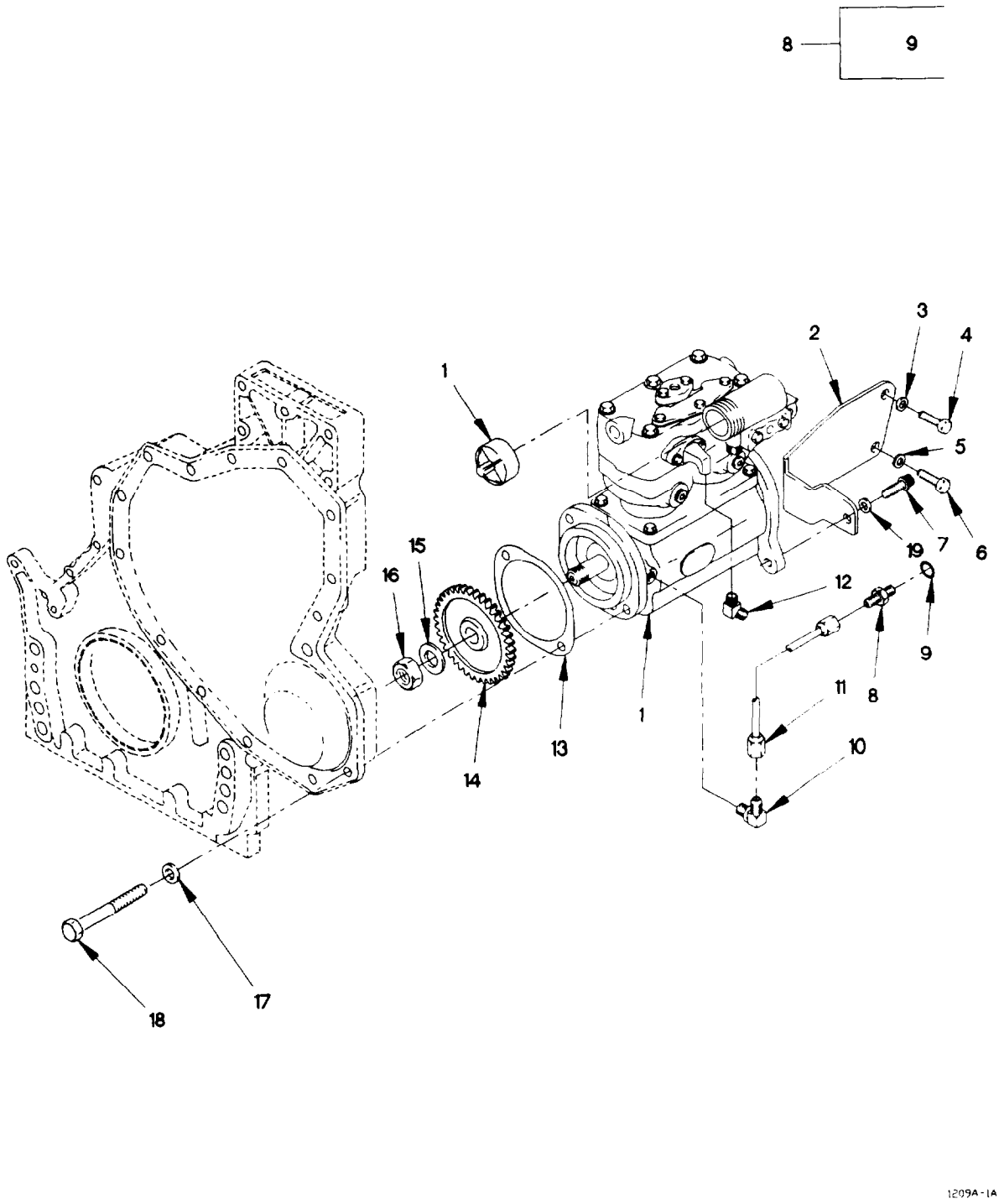

Figure 154. Air Compressor

(1) ITEM NO	(2) SMR CODE	(3) FSCM	(4) PART NUMBER	(5) DESCRIPTION AND USABLE ON CODE (UOC)	(6) QTY
				GROUP 1209: AIR COMPRESSOR ASSEMBLY	
				FIG. 154 AIR COMPRESSOR	
1	PAFZZ	06721	N50013D	COMPRESSOR, RECIPROC	1
2	PFOZZ	19207	12414388	BRACKET, MOUNTING	1
3	PAOZZ	34914	990 3861	WASHER, FLAT M8.4	1
4	PAOZZ	15526	933-M8X20	SCREW, CAP, HEXAGON H M8 X 1.25 X 20	1
5	PAOZZ	19207	12414473-014	WASHER, FLAT M10	1
6	PAOZZ	19207	12414419-112	SCREW, CAP, HEXAGON H M10 X 1.5 X 25	2
7	PAOZZ	96906	MS16997-99	SCREW, CAP, SOCKET HE 3/8-16 X 1	1
8	PAOZZ	96906	MS51525A4	ADAPTER, STRAIGHT, TU	1
9	PAOZZ	81343	J515-4-1	.O-RING 1/4	1
10	PAOZZ	96906	MS51504A4	ELBOW, PIPE TO TUBE	1
11	PAOZZ	19207	12414504-001	TUBE ASSEMBLY, METAL	1
12	PAOZZ	81343	12-12 430360CA	ELBOW, PIPE TO HOSE	1
13	PAFZZ	11083	9Y4634	GASKET PART OF KIT P/N 5R9051	1
14	PAFZZ	11083	7C3179	GEAR, SPUR	1
15	PAFZZ	11083	7X0521	WASHER, FLAT	1
16	PAFZZ	96906	MS51968-23	NUT, PLAIN, HEXAGON 3/4-16	1
17	PAFZZ	11083	5P8245	WASHER, FLAT M13.5	2
18	PAFZZ	11083	6V8336	SCREW, CAP, HEXAGON H 18 X 70MM	2
19	PAOZZ	19207	8349323	WASHER, FLAT 3/8	1

END OF FIGURE

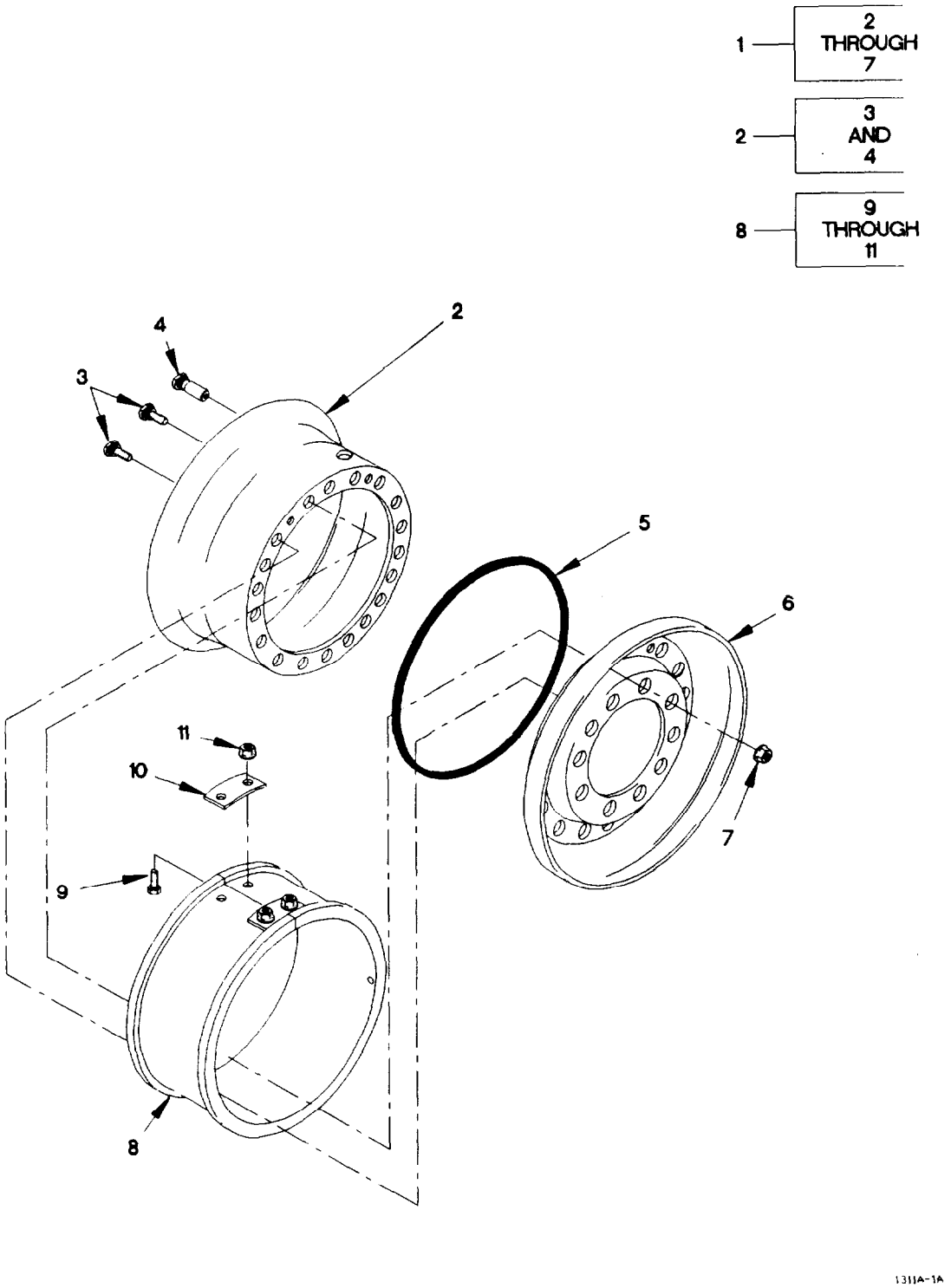

Figure 155. Wheel Assembly and CTIS Valve (Sheet 1 of 2)

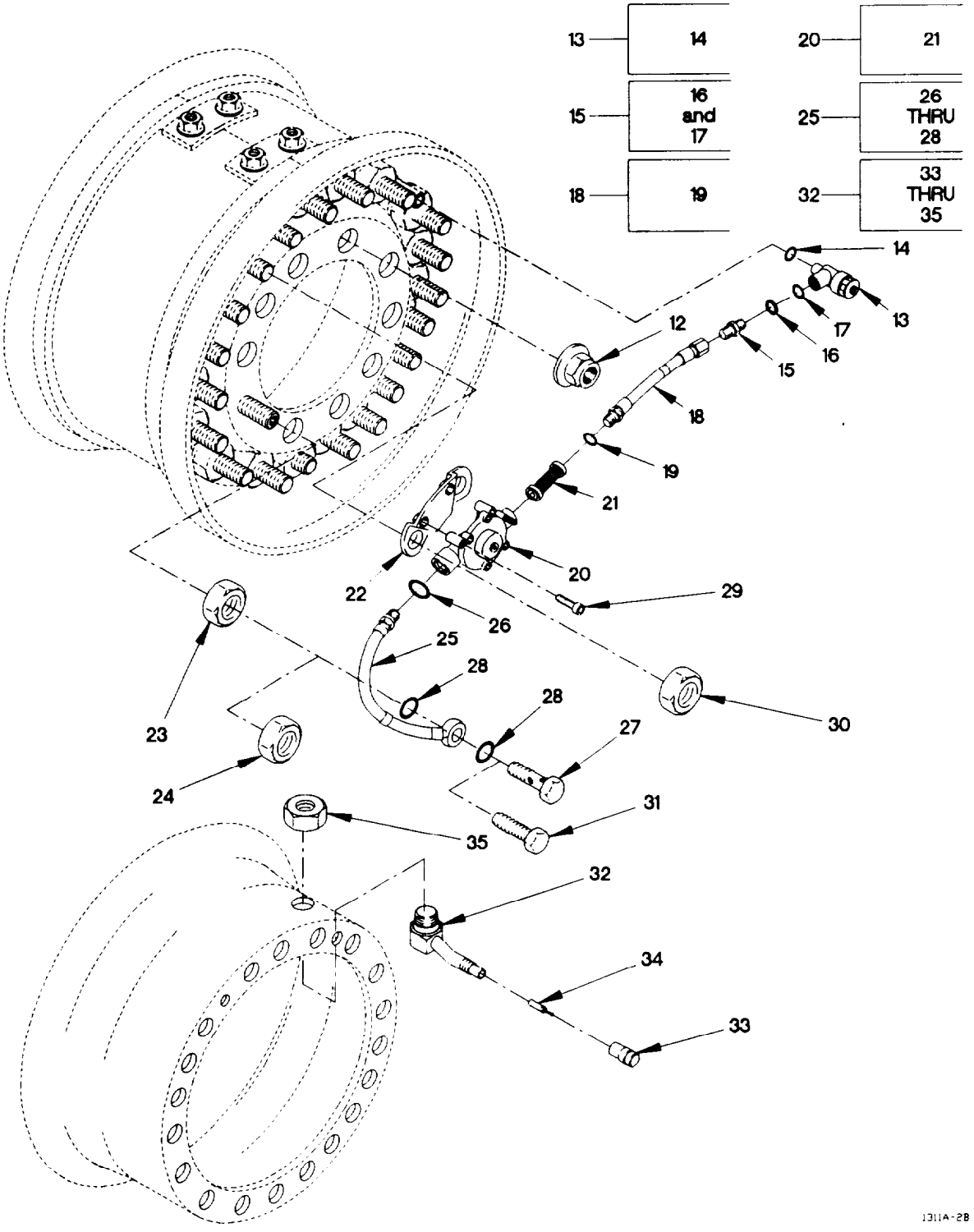

Figure 155. Wheel Assembly and CTIS Valve (Sheet 2 of 2)

(1) ITEM NO	(2) SMR CODE	(3) FSCM	(4) PART NUMBER	(5) DESCRIPTION AND USABLE ON CODE (UOC)	(6) QTY
				GROUP 1311: WHEEL ASSEMBLY FIG. 155 WHEEL ASSEMBLY AND CTIS VALVE	
1	PAOOF	20076	05-10058-00	WHEEL, PNEUMATIC TIR	1
2	PAOOF	20076	05-10110-00	.WHEEL, PNEUMATIC TIR	1
3	PAOZZ	0FW39	12417332-001	. .BOLT, ECCENTRIC HEAD 5/8-18 X 7/16	18
4	PAOZZ	20076	03-18946-00	. .BOLT, ECCENTRIC HEAD 5/8-18 X 1 9/16	2
5	PAOZZ	20076	OR420A	.O-RING	1
6	PAOZZ	20076	05-10107-00	.WHEEL SEGMENT, PNEUM	1
7	PAOZZ	19207	12301125	.NUT, SELF-LOCKING, EX	20
8	PAOOO	62161	T 1001	BEADLOCK, PNEUMATIC	1
9	PAOZZ	96906	MS90727-58	.SCREW, CAP, HEXAGON H 3/8-24 X 3/4	4
10	PAOZZ	19207	12414420-002	.PLATE, MENDING	2
11	PAOZZ	19207	12414420-004	.NUT, SELF-LOCKING, HE	4
12	PAOZZ	19207	10938443-1	NUT, PLAIN, SINGLE BA 3/4-16 (ROAD SIDE)	18
12	PAOZZ	19207	10938443-2	NUT, PLAIN, SINGLE BA 3/4-16 (CURB SIDE)	18
13	PAOZZ	52304	673245	VALVE, ANGLE KNEELING, 10PSI	1
13	PAOZZ	0FW39	12417916	ELBOW, TUBE TO HOSE SPARE TIRE ONLY	1
14	PAOZZ	52304	5999807	.SEAL, NONMETALLIC RO	1
15	PAOZZ	52304	673994	ADPATER, STRAIGHT, TU	1
16	PAOZZ	52304	673996	.WASHER, SEAL	1
17	PAOZZ	52304	673268	.SEAL, NONMETALLIC RO SPARE TIRE ONLY	1
18	PAOZZ	52304	676200	HOSE ASSY, NONMETAL	1
19	PAOZZ	52304	673268	.SEAL, NONMETALLIC RO	1
20	PAOZZ	52304	673217	VALVE, PNEUMATIC	1
21	PAOZZ	52304	599791	.FILTER ELEMENT, FLUI	1
22	PAOZZ	52304	673222	BRACKET, MOUNTING	1
23	PAOZZ	19207	10938444-1	NUT, PLAIN, SINGLE BA 1 1/8-16	2
23	PAOZZ	19207	10938444-2	NUT, PLAIN, SINGLE BA 1 1/8-16	2
24	PAOZZ	96906	MS35691-53	NUT, PLAIN, HEXAGON 5/8-UNF (FOR SPARE TIRE)	1
25	PAOZZ	52304	673997	HOSE ASSY, NONME	1
26	PAOZZ	52304	673269	.O-RING	1
27	PAOZZ	52304	673998	.BOLT, FLUID PASSAGE	1
28	PAOZZ	52304	673999	.SEAL, NONMETALLIC RO	2
29	PAOZZ	19207	12414475-087	SCREW, CAP, SOCKET HE M8 X 1.25 X 30	2
30	PAOZZ	96906	MS35691-53	NUT, PLAIN, HEXAGON 5/8-UNF (FOR SPARE TIRE)	1
31	PAOZZ	80204	B1821BH063F150N	SCREW, CAP, HEXAGON H 5/8-18 X 1 1/2 (SPARE TIRE ONLY)	1
32	PAOZZ	17875	VS-1090	VALVE, PNEUMATIC TIR SPARE TIRE ONLY	1

(1) ITEM NO	(2) SMR CODE	(3) FSCM	(4) PART NUMBER	(5) DESCRIPTION AND USABLE ON CODE (UOC)	(6) QTY
33	PAOZZ	81348	TYIV/CL1/TRVC8	.CAP, PNEUMATIC VALVE SPARE TIRE ONLY	1
34	PAOZZ	81348	TYV/CL2/TR C1	.VALVE CORE	1
35	PAOZZ	17875	265	.NUT, PLAIN, HEXAGON 11/16-16 (SPARE TIRE ONLY)	1

END OF FIGURE

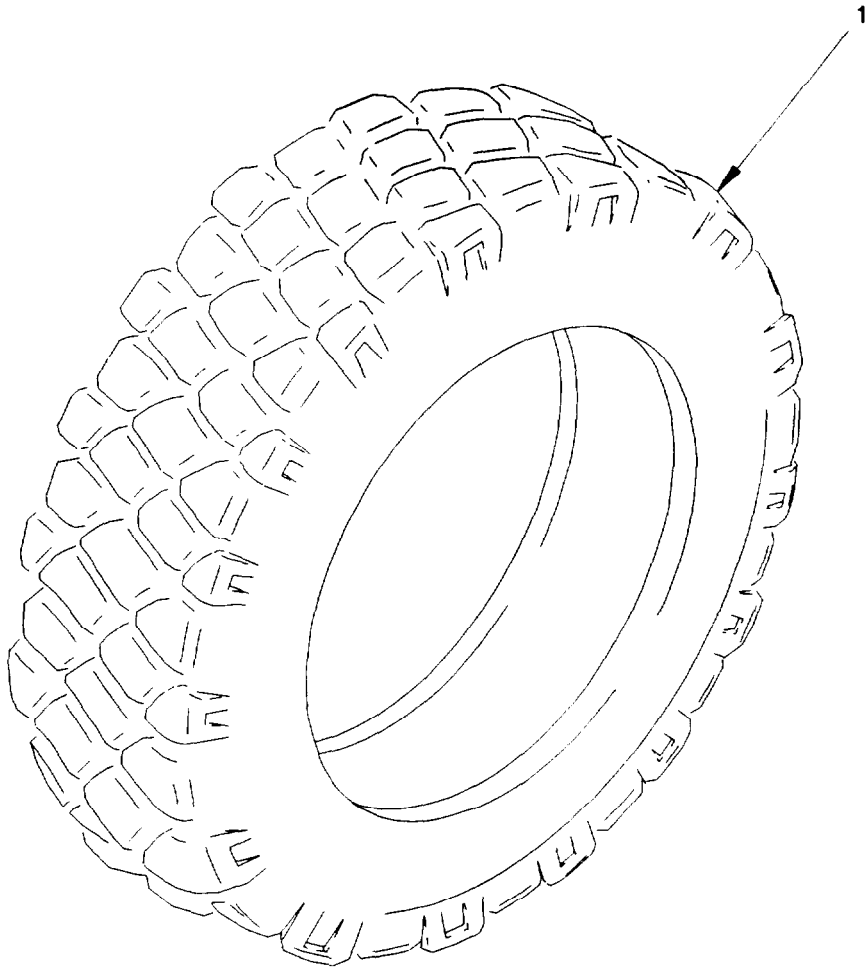

1313A-1-

Figure 156. Tire

(1) ITEM NO	(2) SMR CODE	(3) FSCM	(4) PART NUMBER	(5) DESCRIPTION AND USABLE ON CODE (UOC)	(6) QTY
				GROUP 1313: TIRES, TUBES, TIRE CHAINS FIG. 156 TIRE	
1	PCOHH	12195	MSPN32764	TIRE, PNEUMATIC, VEHI	5
				END OF FIGURE	

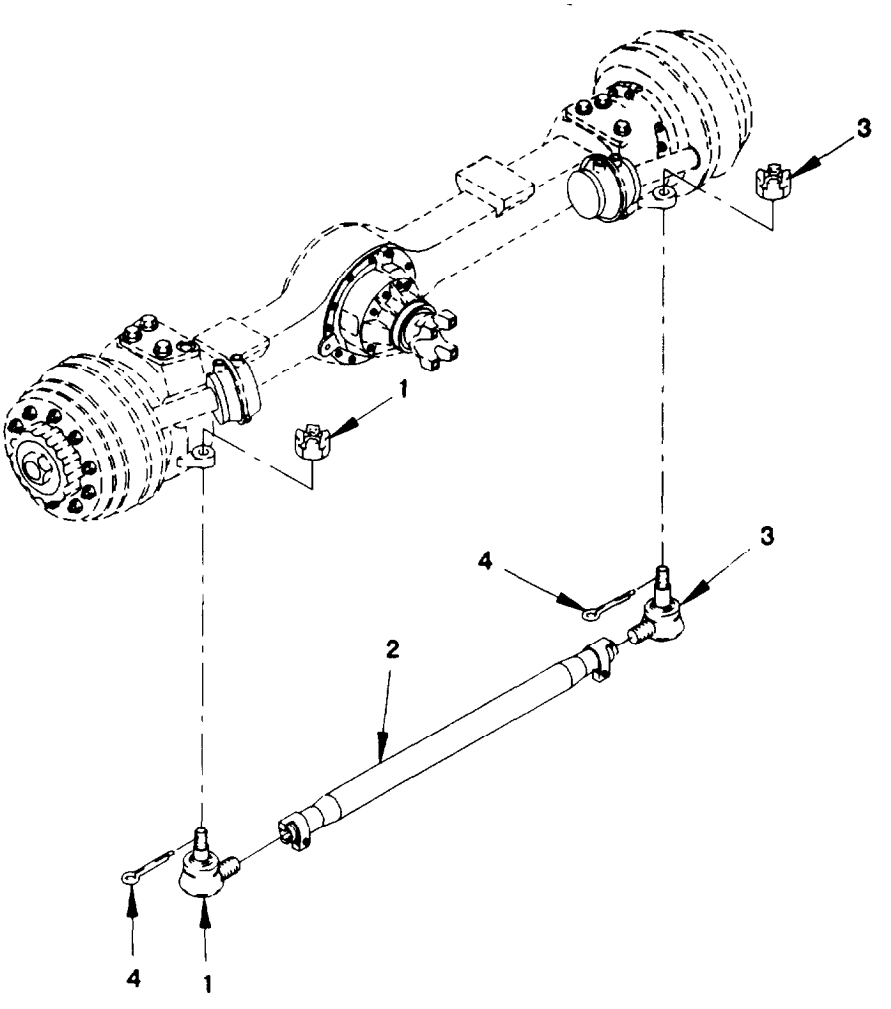

1401C-1-

Figure 157. Tie Rod and Tie Rod Ends

(1) ITEM NO	(2) SMR CODE	(3) FSCM	(4) PART NUMBER	(5) DESCRIPTION AND USABLE ON CODE (UOC)	(6) QTY
				GROUP 1401: MECHANICAL STEERING GEAR	
				FIG. 157 TIE ROD AND TIE ROD ENDS	
1	PAOZZ	89619	10QH 310P1	TIE ROD END, STEERIN LEFT HAND	1
2	PAOZZ	78500	A1-3102-U-2881	TIE ROD, STEERING	1
3	PAOZZ	89619	10QH39P1	TIE ROD END, STEERIN RIGHT HAND	1
4	PAOZZ	78500	K-2412-Z	PIN, COTTER	2
				END OF FIGURE	

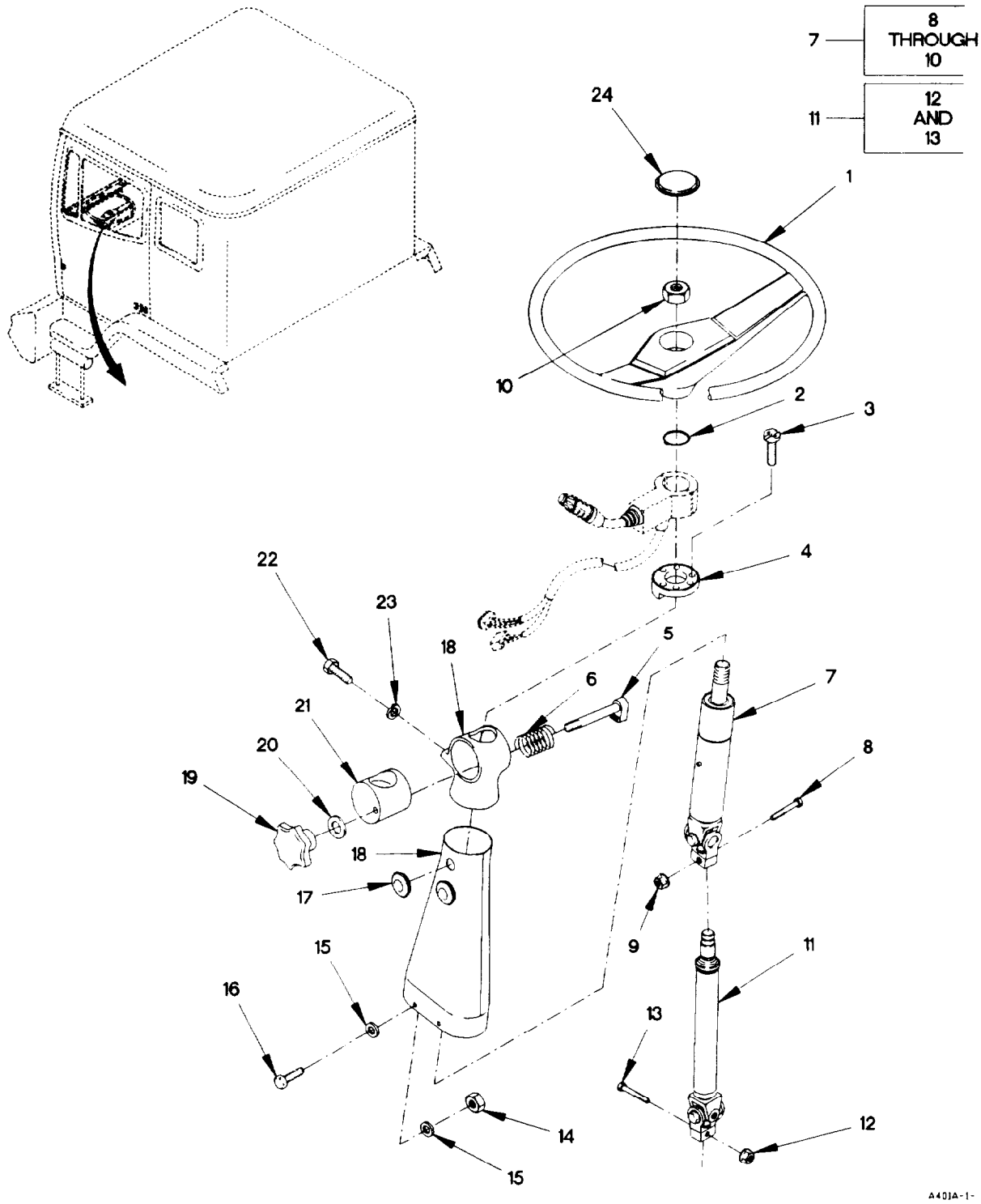

Figure 158. Steering Wheel and Column

(1) ITEM NO	(2) SMR CODE	(3) FSCM	(4) PART NUMBER	(5) DESCRIPTION AND USABLE ON CODE (UOC)	(6) QTY
				GROUP 1401: MECHANICAL STEERING GEAR	
				FIG. 158 STEERING WHEEL AND COLUMN	
1	PAOZZ	0FW39	12417884	STEERING WHEEL	1
2	PAOZZ	19205	12414675-048	RING, RETAINING	1
3	PAOZZ	56161	10505582	SCREW, MACHINE M4 X .7 X 6.6	3
4	PAOZZ	19207	12420314	CONTACT, ELECTRICAL	1
5	PAOZZ	19207	12418102	BOLT, MACHINE M12 X 1.75 X 91	1
6	PAOZZ	19207	12378753	SPRING, HELICAL, COMP	1
7	PAFZZ	0LEB5	7368 429 157	HOUSING, STEERING CO	1
8	PAOZZ	0LEB5	0770 002 068	.BOLT, MACHINE M8 X .7 X 36	1
9	PAOZZ	0LEB5	0770 023 003	.NUT, PLAIN, HEXAGON	1
10	PAOZZ	0LEB5	0637 009 111	.NUT, PLAIN, HEXAGON	1
11	PFFZZ	0LEB5	7025 454 121	ARM, STEERING GEAR	1
12	PAOZZ	0LEB5	0770 023 003	.NUT, PLAIN, HEXAGON	1
13	PAOZZ	0LEB5	0770 002 068	.BOLT, MACHINE M8 X .7 X 36	1
14	PAOZZ	15526	DIN 934 ST M6	NUT, SELF-LOCKING, HE M6 X 1	4
15	PAOZZ	96906	MS27183-10	WASHER, FLAT 9/32	8
16	PAOZZ	15526	DIN933-M6X16-8.8 -A4C	SCREW, CAP, HEXAGON H M6 X 1 X 16	4
17	PAOZZ	19207	12418248	PLUG, PROTECTIVE, DUS	4
18	PAOZZ	0FW39	12417511	HOUSING, STEERING CO	1
19	PAOZZ	0H7H2	2467.263	KNOB	1
20	PAOZZ	21969	A 13 DIN125-ST	WASHER, FLAT M13	1
21	PAOZZ	19207	12417517	SUPPORT, STEERING CO	1
22	PAOZZ	15434	C0718103500	SCREW, CAP, HEXAGON H M8 X 1.25 X 16	2
23	PAOZZ	19207	12414560-018	WASHER, LOCK M8	2
24	PAOZZ	0FW39	TV950049-001	COVER, STEERING CYLI	1
				END OF FIGURE	

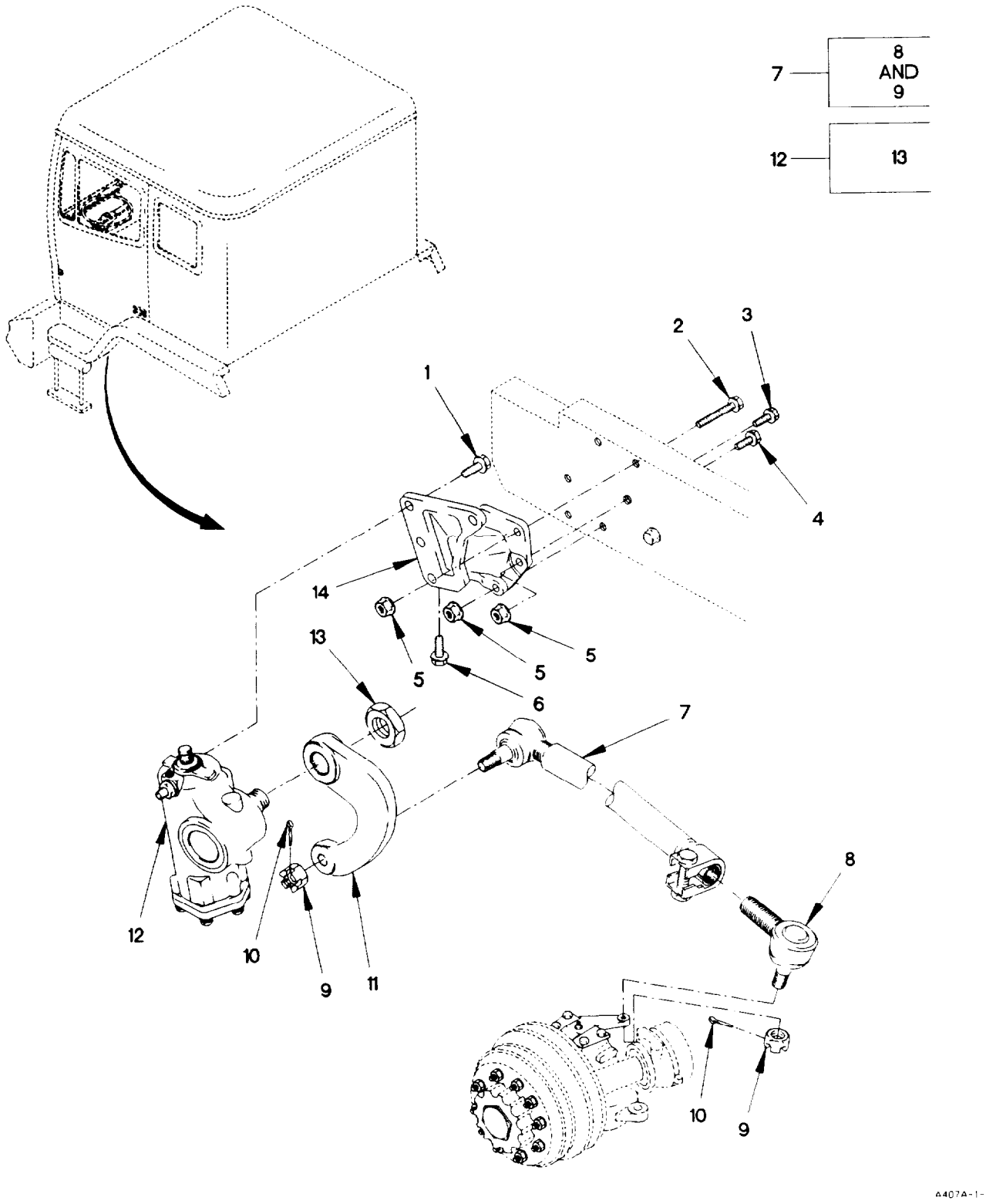

Figure 159. Steering Gear, Pitman Arm, and Drag Link

(1) ITEM NO	(2) SMR CODE	(3) FSCM	(4) PART NUMBER	(5) DESCRIPTION AND USABLE ON CODE (UOC)	(6) QTY
				GROUP 1407: POWER STEERING GEAR ASSEMBLY	
				FIG. 159 STEERING GEAR, PITMAN ARM AND DRAG LINK	
1	PAOZZ	19207	12414307-173	BOLT, MACHINE M20 X 1.5 X 45	3
2	PAOZZ	19207	12414307-140	BOLT, MACHINE M16 X 1.5 X 45	1
3	PAOZZ	19207	12414307-144	BOLT, MACHINE M16 X 1.5 X 65	4
4	PAOZZ	19207	12414307-146	BOLT, MACHINE M16 X 1.5 X 80	1
5	PAOZZ	19207	12414308-025	NUT, SELF-LOCKING, EX M16 X 1.5	6
6	PAOZZ	19207	12420323	BOLT, SHOULDER M20 X 1.5 X 45	1
7	PAOZZ	93019	12650 REV C	DRAG LINK, STEERING	1
8	PAOZZ	93019	12877-KL	.SOCKET ASSEMBLY	1
9	PAOZZ	56161	10501625	.NUT, PLAIN, CASTELLAT	2
10	PAOZZ	96906	MS24665-423	PIN, COTTER	2
11	PAOZZ	19207	12414586	PITMAN ARM, STEERING	1
12	PAFZZ	0LEB5	8098 955 146	STEERING GEAR	1
13	PAFZZ	0LBE5	0770 020 013	.NUT, LOCKING	1
14	PAOZZ	19207	12417307	SUPPORT, STEERING CO	1
				END OF FIGURE	

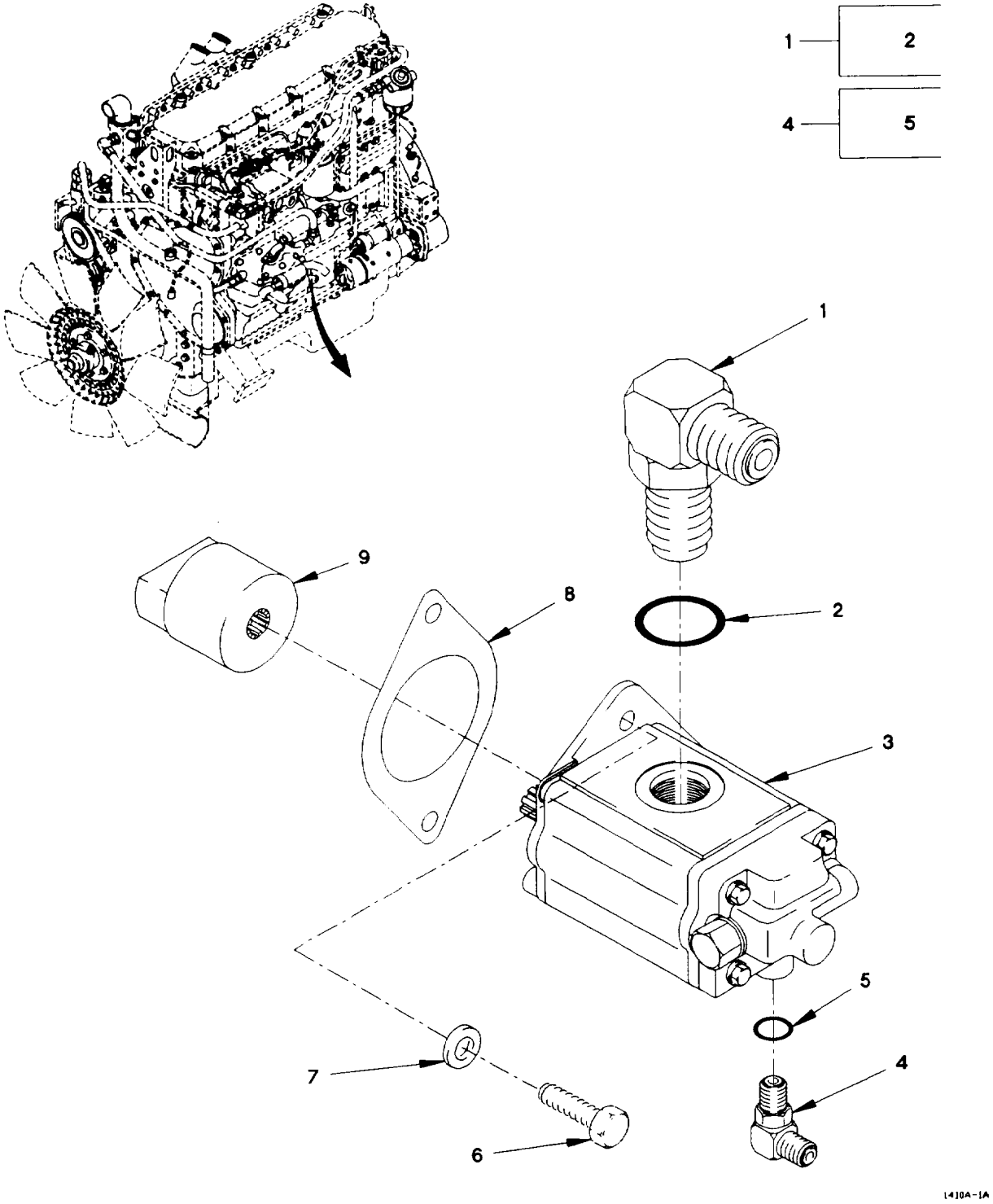

Figure 160. Power Steering Pump

(1) ITEM NO	(2) SMR CODE	(3) FSCM	(4) PART NUMBER	(5) DESCRIPTION AND USABLE ON CODE (UOC)	(6) QTY
				GROUP 1410: HYDRAULIC PUMP OR FLUID MOTOR ASSEMBLY	
				FIG. 160 POWER STEERING PUMP	
1	PAOZZ	96906	MS51527A16	ELBOW, TUBE TO BOSS	1
2	PAOZZ	96906	MS28778-16	.O-RING 1	1
3	PAOZZ	14120	B5501-31689-120-150	PUMP ASSEMBLY, POWER	1
4	PAOZZ	96906	MS51527A6	ELBOW, TUBE TO BOSS	1
5	PAOZZ	02697	3-906N552-90	.O-RING	1
6	PAOZZ	96906	MS16997-99	SCREW, CAP, SOCKET HE 3/8-16 X 1	2
7	PAOZZ	19207	8349323	WASHER, FLAT 3/8	2
8	PAOZZ	11083	6D1004	GASKET	1
9	PAOZZ	0FW39	12414373	ADAPTER, SPLINE	1
				END OF FIGURE	

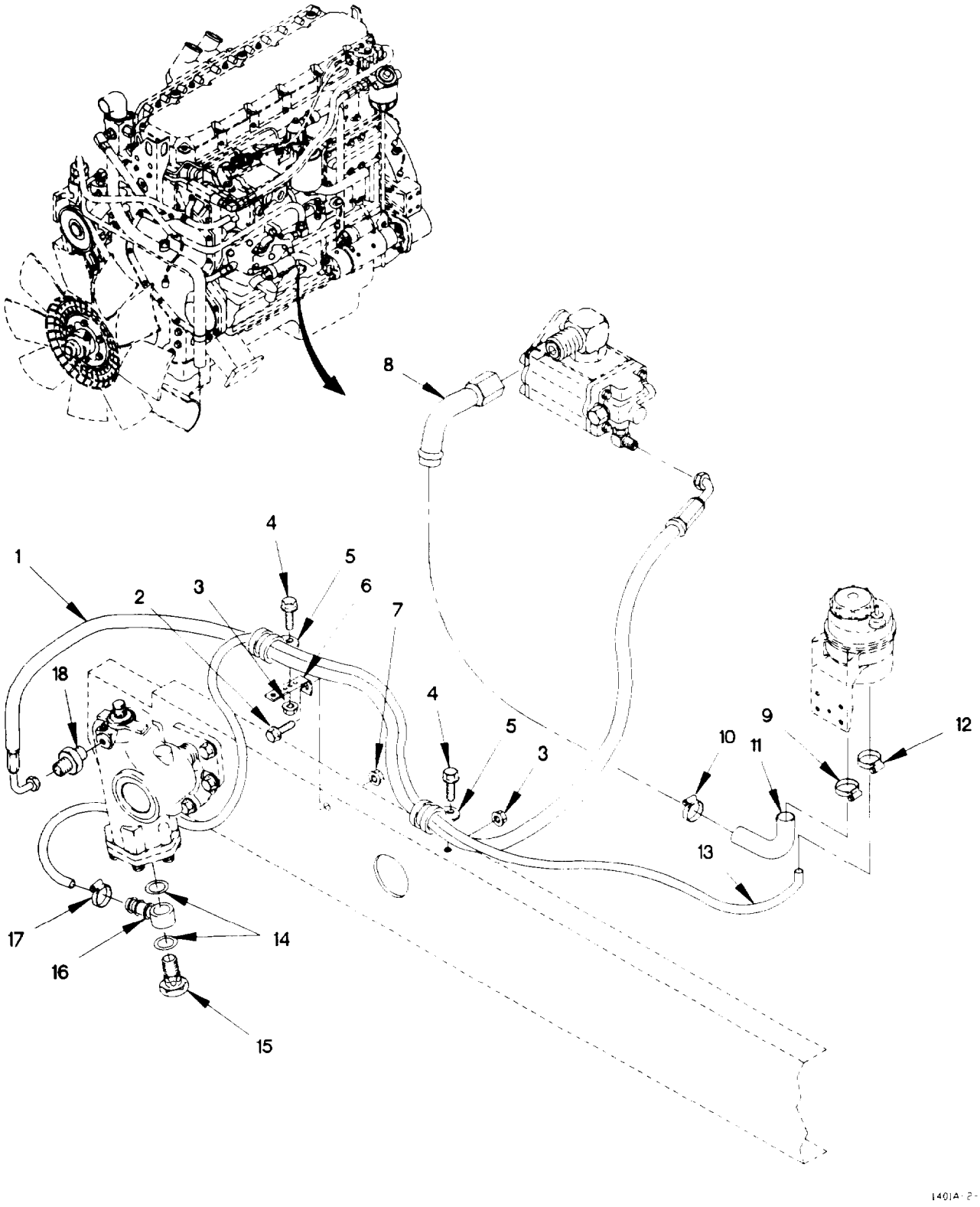

Figure 161. Power Steering Hoses

(1) ITEM NO	(2) SMR CODE	(3) FSCM	(4) PART NUMBER	(5) DESCRIPTION AND USABLE ON CODE (UOC)	(6) QTY
				GROUP 1411: HOSES, LINES, FITTINGS	
				FIG. 161 POWER STEERING HOSES	
1	PAOZZ	0FW39	12418041	HOSE ASSEMBLY, NONME	1
2	PAOZZ	19207	12414307-064	BOLT, MACHINE M10 X 1.5 X 30	1
3	PAOZZ	19207	12414308-002	NUT, SELF-LOCKING, EX M6 X 1	2
4	PAOZZ	56161	10503805	SCREW, CAP, HEXAGON H M6 X 1 X 20	2
5	PAOZZ	18076	S630H-24	CLAMP, LOOP, HVY DUTY	2
6	PAOZZ	19207	12418303	BRACKET, ANGLE	1
7	PAOZZ	19207	12414308-019	NUT, SELF-LOCKING, EX M10 X 1.5	1
8	PAOZZ	19207	12378889-001	TUBE ASSEMBLY, METAL	1
9	PAOZZ	25281	024S9	CLAMP, HOSE	1
10	PAOZZ	7Z588	9420	CLAMP, HOSE	1
11	PAOZZ	0FW39	12418040	HOSE, PREFORMED	1
12	PAOZZ	25281	032S9	CLAMP, HOSE	1
13	PAOZZ	0FW39	12418037	HOSE, PREFORMED	1
14	PAOZZ	19207	12417523-016	GASKET 18, 2 X 1, 5 X 21, 9	2
15	PAOZZ	19207	12418045-006	COCK, PLUG M26 X 32	1
16	PAOZZ	19207	12419009	SEAT, VALVE	1
17	PAOZZ	7Z588	9410	CLAMP, HOSE 1 1/16	1
18	PAOZZ	93061	6-M16X1.5F80X-S	ADAPTER, STRAIGHT, PI	1
				END OF FIGURE	

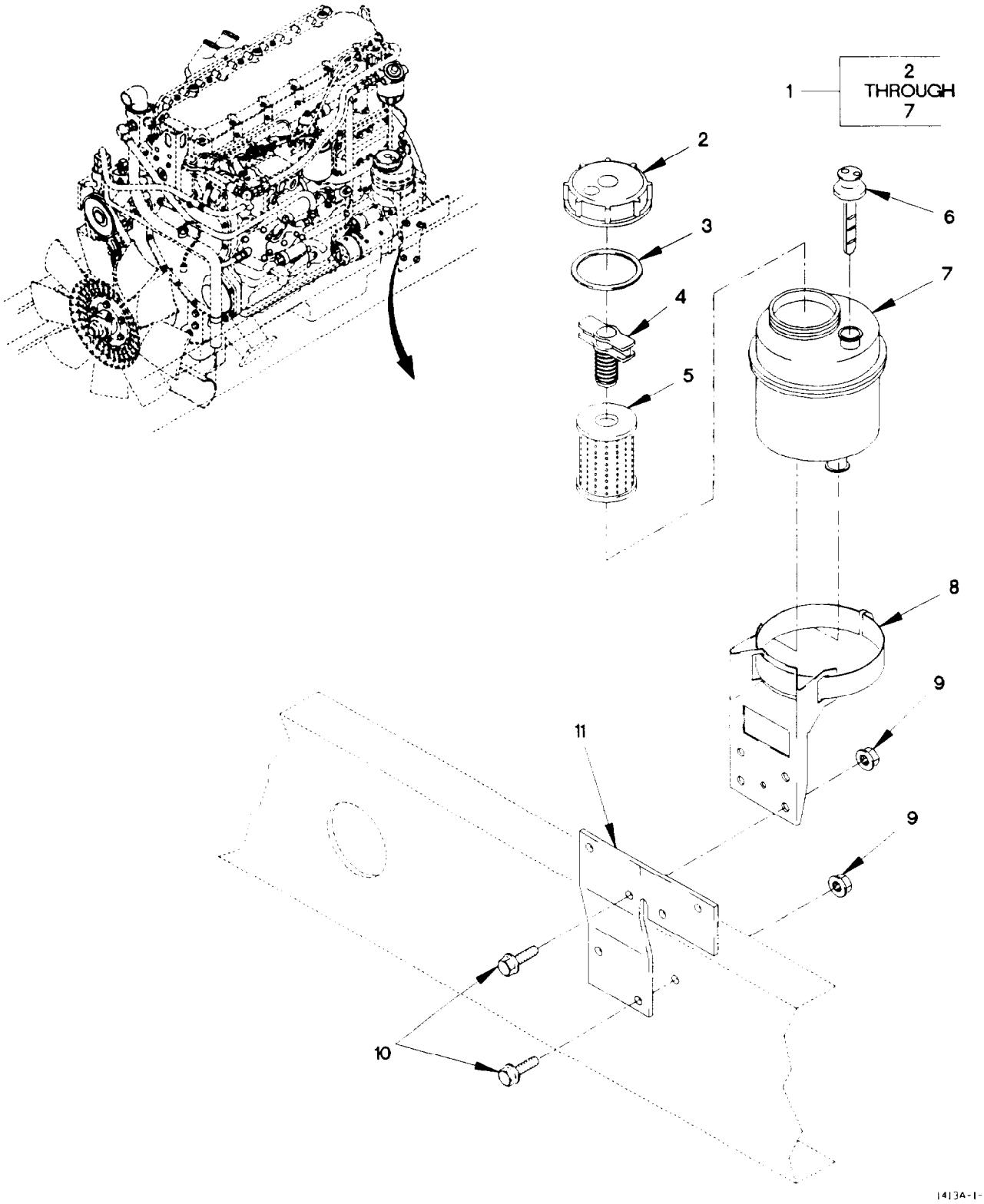

Figure 162. Power Steering Reservoir

(1) ITEM NO	(2) SMR CODE	(3) FSCM	(4) PART NUMBER	(5) DESCRIPTION AND USABLE ON CODE (UOC)	(6) QTY
				GROUP 1413: TANKS, RESERVOIRS	
				FIG. 162 POWER STEERING RESERVOIR	
1	PAOZZ	0LEB5	7632 472 424	RESERVOIR, PS PUMP	1
2	PAOZZ	0LEB5	7632-002-144	.HEAD, FLUID FILTER	1
3	PAOZZ	6V370	0770 032 935	.SEAL, NONMETALLIC RO	1
4	PAOZZ	0LEB5	7632 140 102	.BOLT, CLOSE TOLERANC	1
5	PAOZZ	0LEB5	7632 141 102	.FILTER ELEMENT, FLUI	1
6	PAOZZ	0LEB5	7632 319 110	.GAGE ROD-CAP, LIQUID	1
7	XAOZZ	0LEB5	7632 062 116	.TANK, OIL	1
8	PAOZZ	0LEB5	7633 222 102	BRACKET, MOUNTING	1
9	PAOZZ	19207	12414308-019	NUT, SELF-LOCKING, EX M10 X 1.5	4
10	PAOZZ	19207	124143097-064	BOLT, MACHINE M10 X 1.5 X 30	4
11	PAOZZ	19207	12420848	BRACKET, SOLENOID	1
				END OF FIGURE	

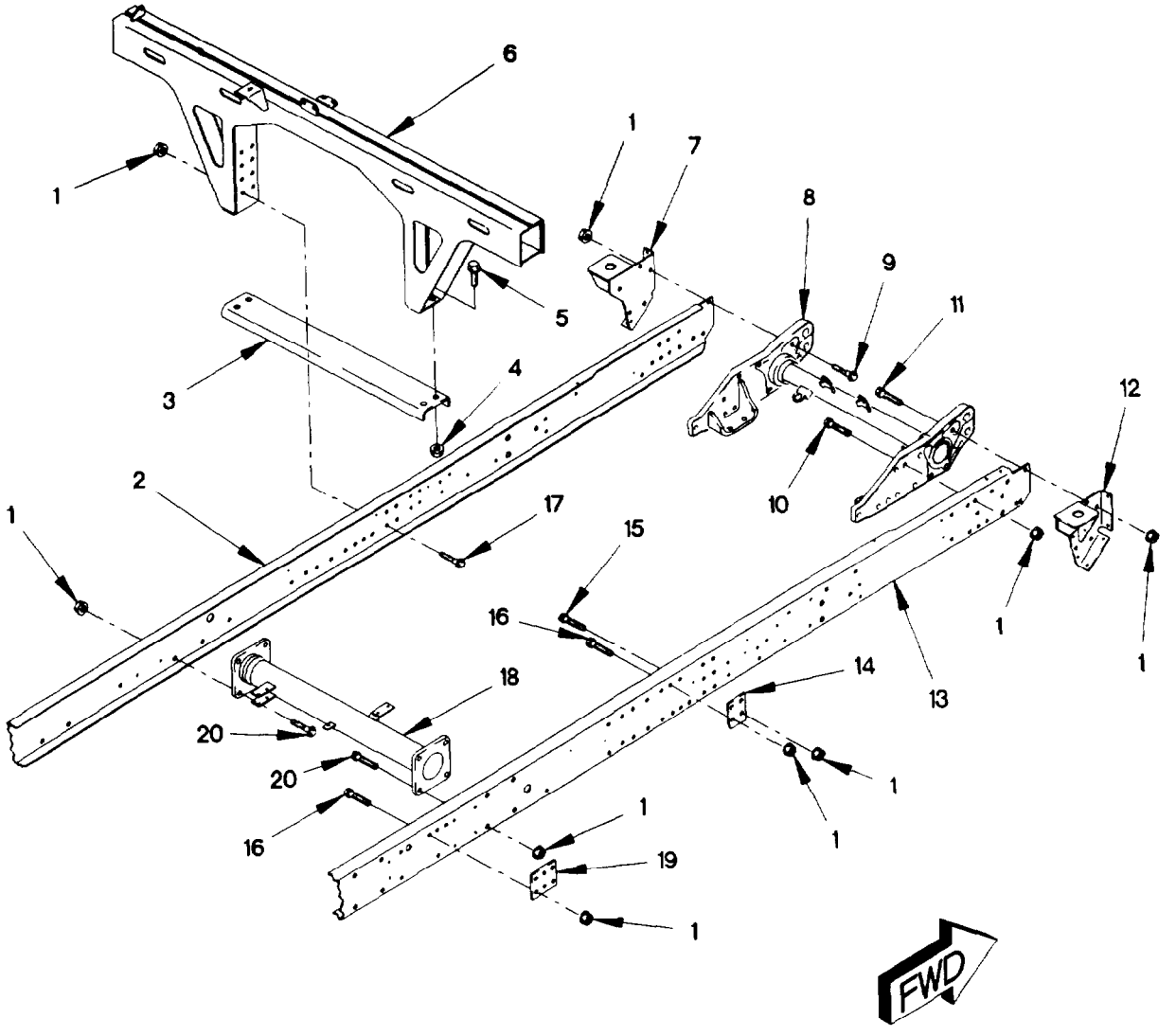

1501AK1A

Figure 163. M1076, M1079, M1080 Frame Assembly (Sheet 1 of 3)

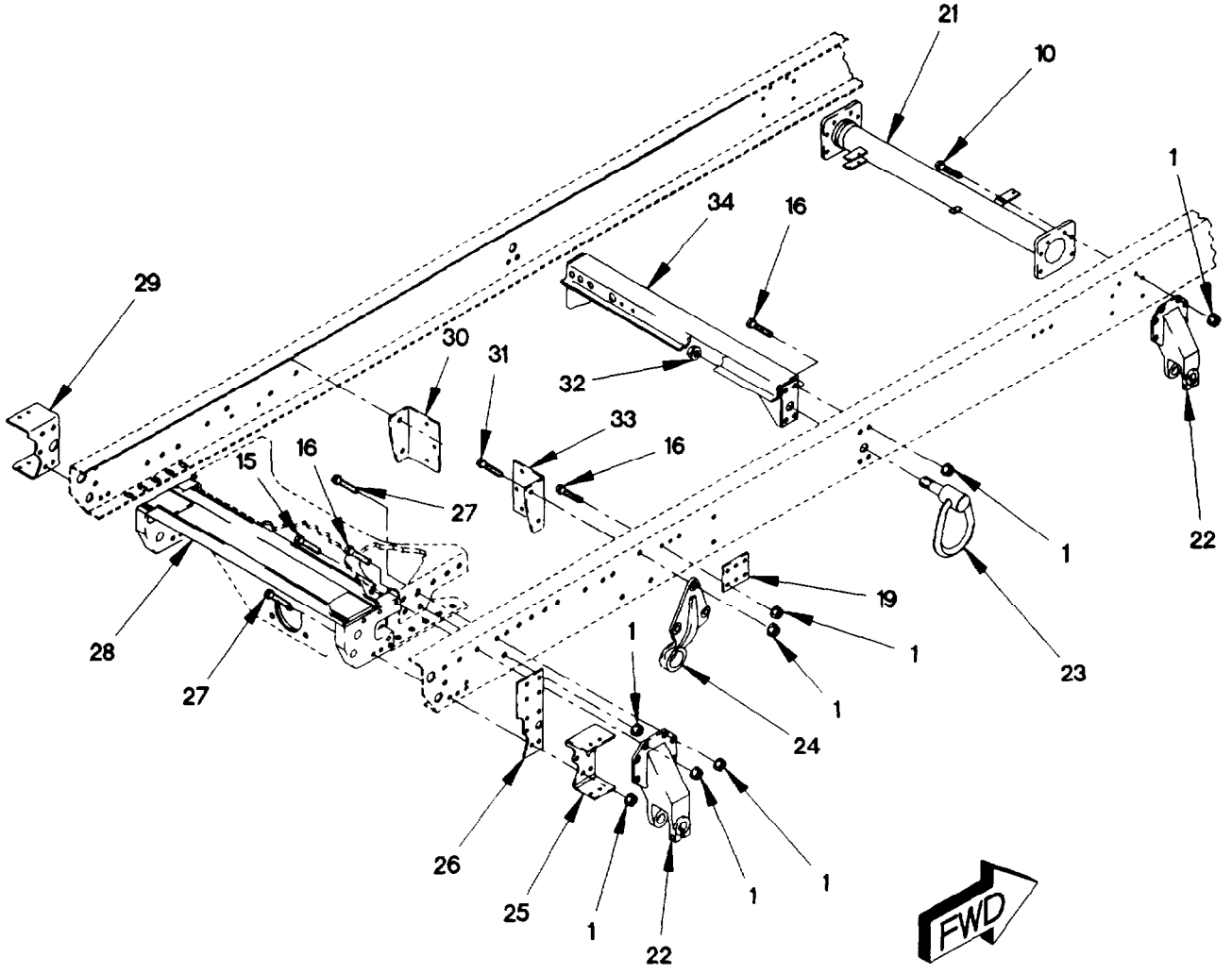

1501AK2A

Figure 163. M1078, M1079, M1080 Frame Assembly (Sheet 2 of 3)

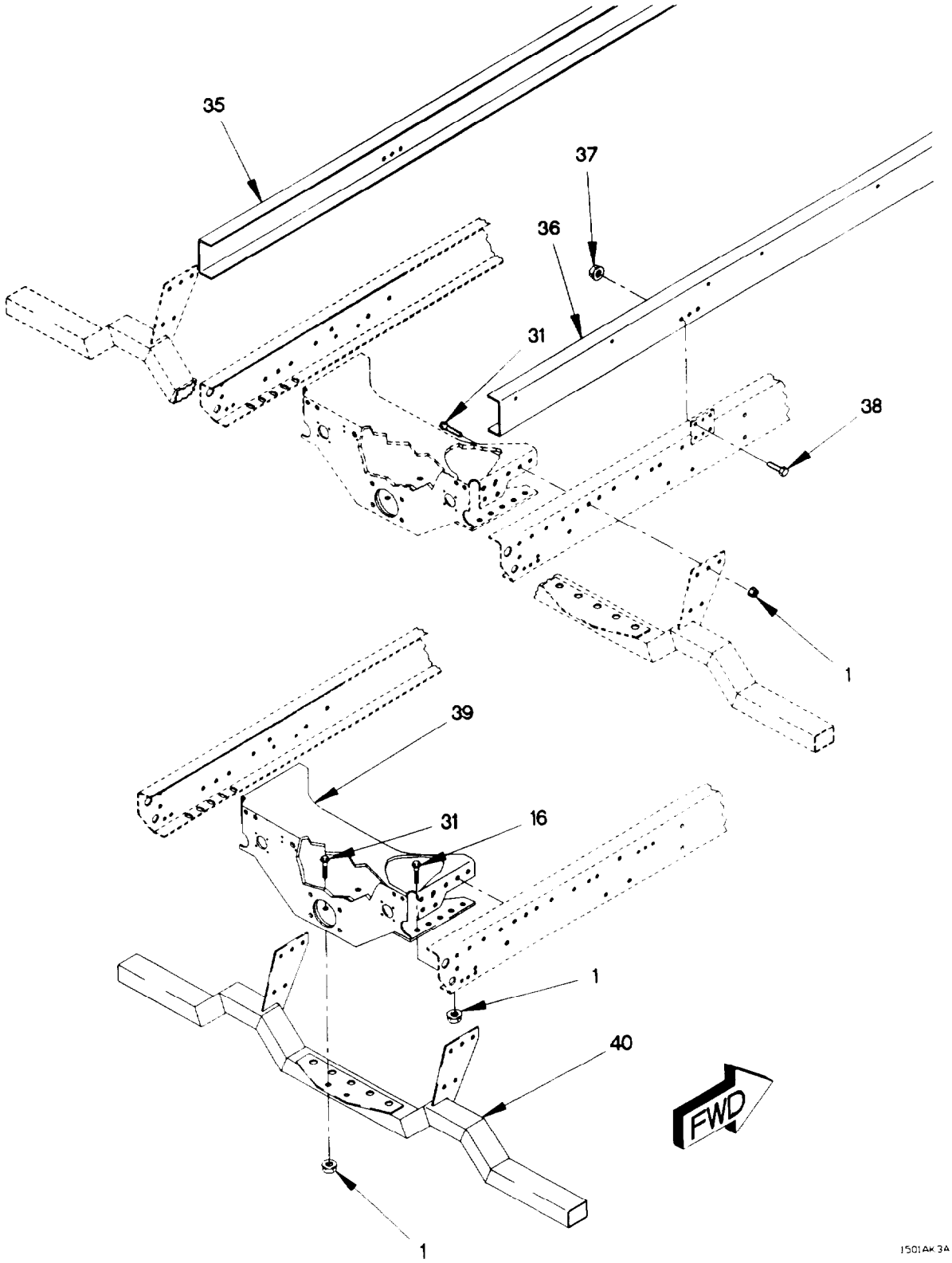

Figure 163. M1078, M1079, M1080 Frame Assembly (Sheet 3 of 3)

(1) ITEM NO	(2) SMR CODE	(3) FSCM	(4) PART NUMBER	(5) DESCRIPTION AND USABLE ON CODE (UOC)	(6) QTY
				GROUP 1501: FRAME ASSEMBLY FIG. 163 M1078, M1079, M1080 FRAME ASSEMBLY	
1	PAHZZ	19207	12414308-025	NUT, SELF-LOCKING, EX M16 X 1.5 UOC: LAA, LAB, LAD, LWB, LWD,	113
2	XBHZZ	19207	12417452-001	CHASSIS, STRUCTURAL, SIDE RAIL, LEFT UOC: LAA, LAB, LAD, LWB, LWD,	1
3	PAFZZ	19207	12414592	STRAP, RETAINING UOC: LAA, LAB, LAD, LWB, LWD,	1
4	PAHZZ	19207	12414308-027	NUT, SELF-LOCKING, EX M20 X 1.5 UOC: LAA, LAB, LAD, LWB, LWD,	4
5	PAHZZ	19207	12414307-173	BOLT, MACHINE M20 X 1.5 X 45 UOC: LAA, LAB, LAD, LWB, LWD,	4
6	PAFZZ	19207	12420571-001	BRACKET, VEHICULAR C UOC: LAA, LAB, LAD, LWB, LWD,	1
7	PAFZZ	19207	12417897	BRACKET, VEHICULAR C UOC: LAA, LAB, LAD, LWB, LWD,	1
8	PAHZZ	19207	12419270	FRAM SECTION, STRUC UOC: LAA, LAB, LAD, LWB, LWD,	1
9	PAOZZ	19207	12421697-004	BOLT, MACHINE M16 X 1.5 X 75 UOC: LAA, LAB, LAD, LWB, LWD,	2
10	PAOZZ	19207	12421697-003	BOLT, MACHINE M16 X 1.5 X 60 UOC: LAA, LAB, LAD, LWB, LWD,	16
11	PAHZZ	19207	12414307-146	BOLT, MACHINE M16 X 1.5 X 80 UOC: LAA, LAB, LAD, LWB, LWD,	2
12	PAFZZ	19207	12419881	BRACKET, VEHICULAR C UOC: LAA, LAB, LAD,	1
13	XBHZZ	19207	12418157-001	CHANNEL, STRUCTURAL, SIDERAIL, RIGHT UOC: LAA, LAB, LAD, LWB, LWD,	1
14	PAFZZ	19207	12417908	PLATE, MOUNTING UOC: LAA, LAB, LAD, LWB, LWD,	2
15	PAHZZ	19207	12414307-143	BOLT, MACHINE M16 X 1.5 X 60 UOC: LAA, LAB, LAD, LWB, LWD,	4
16	PAHZZ	19207	12414307-140	BOLT, MACHINE M16 X 1.5 X 45 UOC: LAA, LAB, LAD, LWB, LWD,	34
17	PAOZZ	19207	12421697-001	BOLT, MACHINE M16 X 1.5 X 50 UOC: LAA, LAB, LAD, LWB, LWD,	12
18	PAHZZ	0FW39	12414510	FRAM SECTION, STRUC UOC: LAA, LAB, LAD, LWB, LWD,	1
19	PAFZZ	19207	12417907	PLATE, MOUNTING UOC: LAA, LAB, LAD, LWB, LWD,	4
20	PAOZZ	19207	12421697-002	BOLT, HEX FLANGE M16 X 1.5 X 55 UOC: LAA, LAB, LAD, LWB, LWD,	6
21	PFHZZ	19207	12414511	FRAM SECTION, STRUC UOC: LAA, LAB, LAD, LWB, LWD,	1
22	PFHZZ	19207	12417403	FRAM SECTION, STRUC UOC: LAA, LAB, LAD, LWB, LWD,	4

(1) ITEM NO	(2) SMR CODE	(3) FSCM	(4) PART NUMBER	(5) DESCRIPTION AND USABLE ON CODE (UOC)	(6) QTY
23	PAOZZ	04368	21237LF	BOLT, RING 1 1/8-12 X 2 1/4 UOC: LAA, LAB, LAD, LWB, LWD,	2
24	PAHZZ	19207	12417391	BRACKET, VEHICULAR C UOC: LAA, LAB, LAD, LWB, LWD,	2
25	PAFZZ	0FW39	12417895	BRACKET, LIGHT RETEN UOC: LAA, LAB, LAD,	1
26	PAFZZ	19207	12420312	BRACKET, MOUNTING UOC: LAD, LWD,	2
27	PAFZZ	19207	12414307-147	BOLT, MACHINE M16 X 1.5 X 70 UOC: LAA, LAB, LAD, LWB, LWD,	14
28	PAHZZ	19207	12419916	FRAME SECTION, STRUC UOC: LAA, LAB, LAD, LWB, LWD,	1
29	PFFZZ	0FW39	12417896	BRACKET, LIGHT RETEN UOC: LAA, LAB, LAD, LWB, LWD,	1
30	PFHZZ	19207	12417681	BRACKET, ANGLE UOC: LAA, LAB, LAD, LWD	1
31	PAHZZ	19207	12414307-141	BOLT, MACHINE M16 X 1.5 X 50 UOC: LAA, LAB, LAD, LWB, LWD,	26
32	PAOZZ	96906	MS51943-52	NUT, SELF-LOCKING, HE 1/ 1/8-12 UOC: LAA, LAB, LAD, LWB, LWD,	2
33	PFHZZ	19207	12417684	BRACKET, ANGLE UOC: LAA, LAB, LAD, LWB, LWD,	1
34	PFHZZ	19207	12414512	BRACKET, VEHICULAR C SHOCK MOUNT UOC: LAA, LAB, LAD, LWB, LWD,	1
35	PAOZZ	19207	12417261	FRAME SECTION, STRUC UOC: LAB, LWB,	1
36	PAOZZ	19207	12417250	FRAME SECTION, STRUC UOC: LAB, LWB,	1
37	PAOZZ	19207	12414308-025	NUT, SELF-LOCKING, EX M6 X 1.5 UOC: LAB, LWB,	16
38	PAOZZ	19207	12414307-140	BOLT, MACHINE M16 X 1.5 X 45 UOC: LAB, LWB,	20
39	PGHZZ	19207	12414577	FRAME SECTION, STRUC UOC: LAA, LAB, LAD, LWB, LWD,	1
40	PAFZZ	19207	12420238	BRACKET, MOUNTING UOC: LAA, LAB, LAD, LWB, LWD,	1

END OF FIGURE

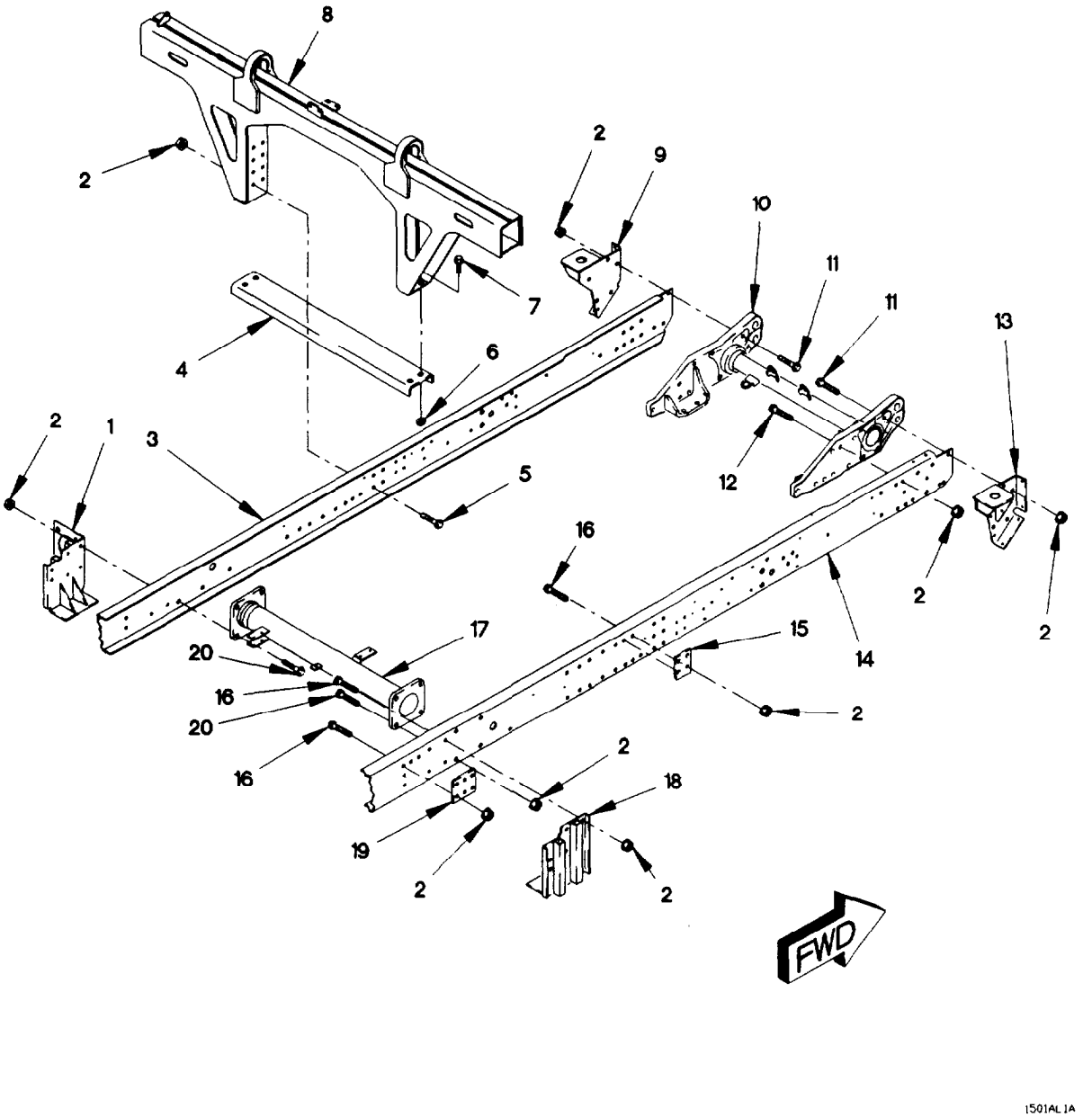

Figure 164. M1081 Frame Assembly (Sheet 1 of 4)

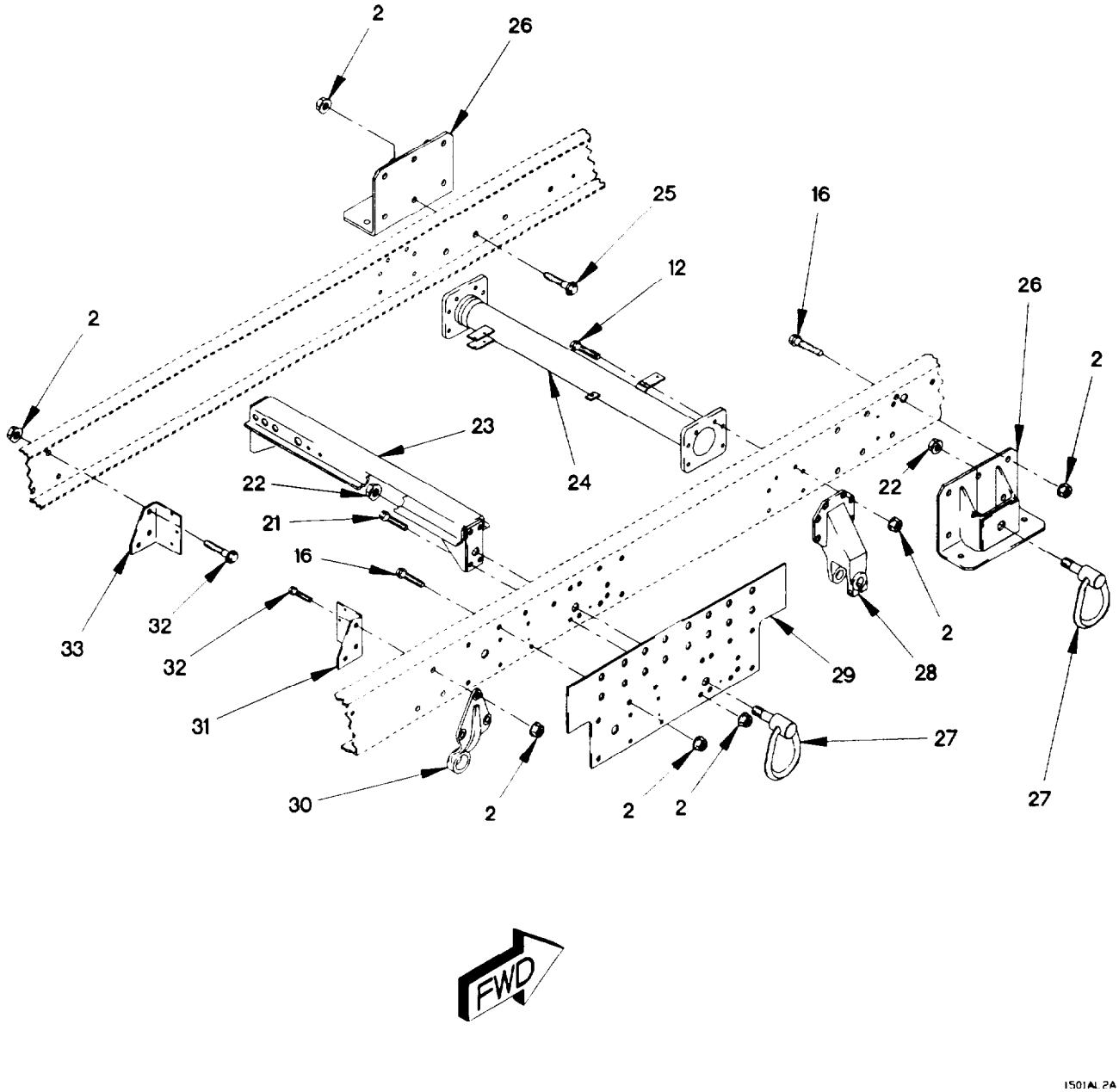

Figure 164. M1081 Frame Assembly (Sheet 2 of 4)

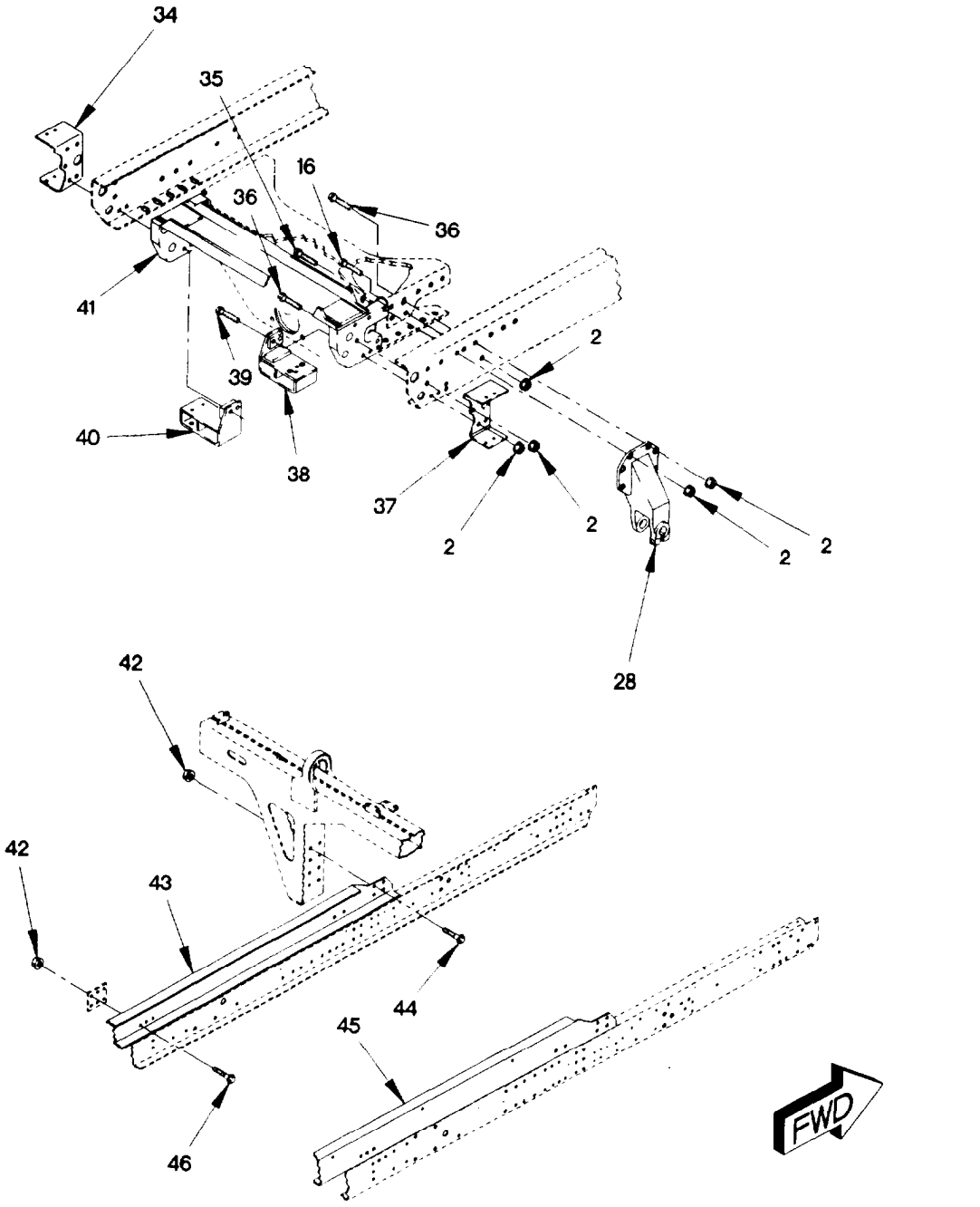

1501AL 3A

Figure 164. M1081 Frame Assembly (Sheet 3 of 4)

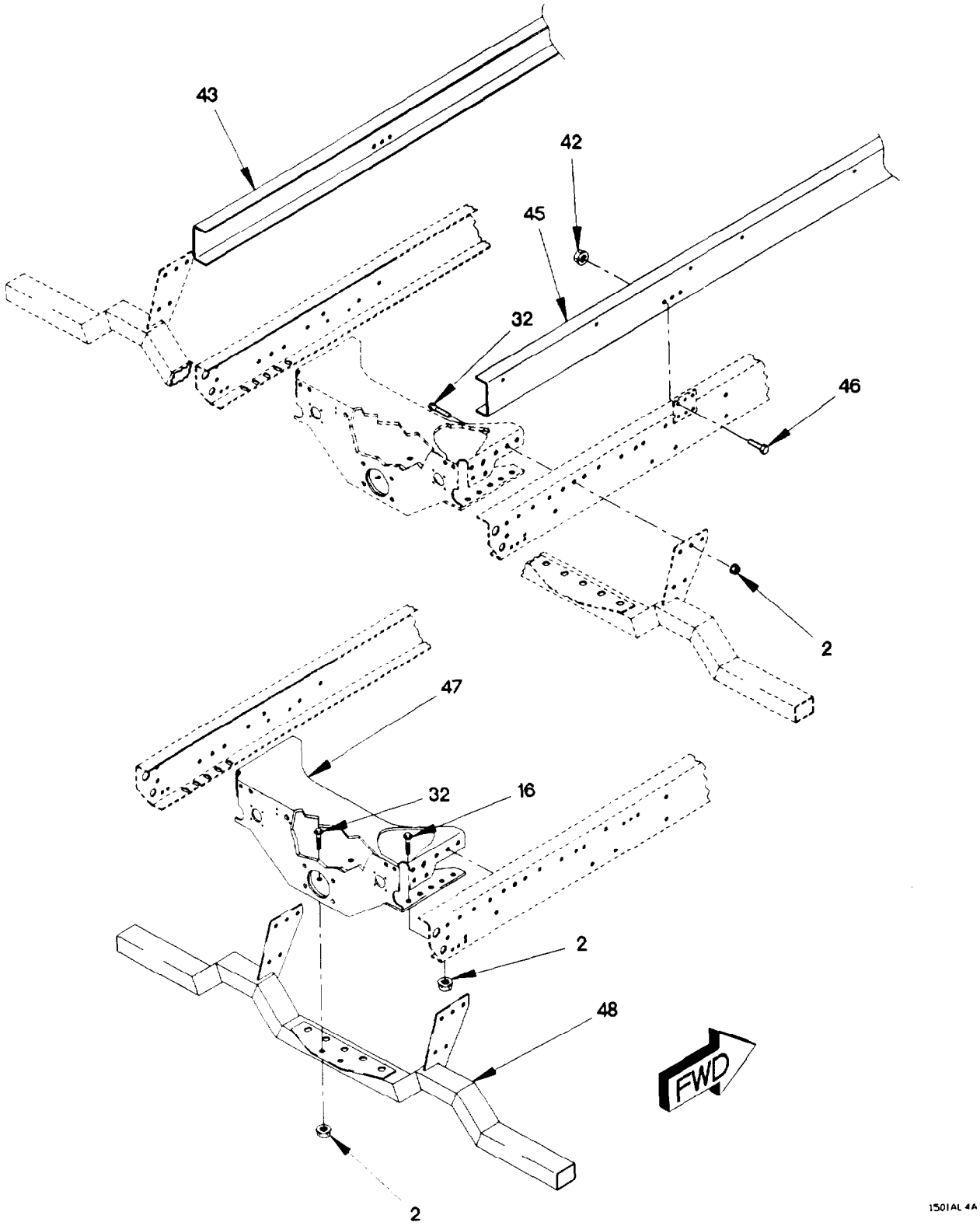

Figure 164. M1081 Frame Assembly (Sheet 4 of 4)

(1) ITEM NO	(2) SMR CODE	(3) FSCM	(4) PART NUMBER	(5) DESCRIPTION AND USABLE ON CODE (UOC)	(6) QTY
				GROUP 1501: FRAME ASSEMBLY FIG. 164 M1081 FRAME ASSEMBLY	
1	PAFZZ	19207	12419950-002	BRACKET, MOUNTING UOC: LAC, LWC,	1
2	PAHZZ	19207	12414308-025	NUT, SELF-LOCKING, EX M16 X 1.5 UOC: LAC, LWC,	203
3	XBHZZ	19207	12417452-009	CHASSIS, STRUCTURAL, SIDE RAIL, RIGHT UOC: LAC, LWC,	1
4	PAFZZ	19207	12414592	STRAP, RETAINING UOC: LAC, LWC,	1
5	PAOZZ	19207	12421697-001	BOLT, MACHINE M16 X 1.5 X 50 UOC: LAC, LWC,	12
6	PAHZZ	19207	12414308-027	NUT, SELF-LOCKING, EX M20 X 1.5 UOC: LAC, LWC,	4
7	PAHZZ	19207	12414307-173	BOLT, MACHINE M20 X 1.5 X 45 UOC: LAC, LWC,	4
8	PAFZZ	19207	12420571-002	BRACKET, VEHICULAR C UOC: LAC, LWC,	1
9	PAFZZ	19207	12417897	BRACKET, VEHICULAR UOC: LAC, LWC,	1
10	PAHZZ	19207	12419270	FRAME SECTION, STRUC UOC: LAC, LWC,	1
11	PAOZZ	19207	12421697-004	BOLT, MACHINE M16 X 1.5 X 75 UOC: LAC, LWC,	8
12	PAOZZ	19207	12421697-003	BOLT, MACHINE M16 X 1.5 X 60 UOC: LAC, LWC,	16
13	PAFZZ	19207	12419881	BRACKET, VEHICULAR C UOC: LAC,	1
14	XBHZZ	19207	12418157-009	CHANNEL, STRUCTURAL, SIDERAIL, RIGHT UOC: LAC, LWC,	1
15	PAFZZ	19207	12417908	PLATE, MOUNTING UOC: LAC, LWC,	2
16	PAHZZ	19207	1241307-140	BOLT, MACHINE M16 X 1.5 X 45 UOC: LAC, LWC,	72
17	PAHZZ	0FW39	12414510	FRAME SECTION, STRUC UOC: LAC, LWC,	1
18	PAFZZ	19207	12419950-001	BRACKET, ANGLE UOC: LAC,	1
19	PAOZZ	19207	12417907	PLATE, MOUNTING UOC: LAC, LWC,	2
20	PAHZZ	19207	12421697-002	BOLT, HEX FLANGE M16 X 1.5 X 55 UOC: LAC, LWC,	5
21		19207	12414307-142	BOLT, MACHINE M16 X 1.5 X 55 UOC: LAC, LWC,	8

(1) ITEM NO	(2) SMR CODE	(3) FSCM	(4) PART NUMBER	(5) DESCRIPTION AND USABLE ON CODE (UOC)	(6) QTY
22	PAOZZ	96906	MS51943-52	NUT, SELF-LOCKING, HE 1 1/8-12 UOC: LAC, LWC,	4
23	PFHZZ	19207	12414512	BRACKET, VEHICULAR C SHOCK MOUNT UOC: LAC, LWC,	1
24	PFHZZ	19207	12414511	FRAME SECTION, STRUC UOC: LAC, LWC,	1
25	PAHZZ	19207	12414307-138	BOLT, MACHINE M16 X 1.5 X 35 UOC: LAC, LWC,	2
26	PAFZZ	19207	12419951	BRACKET, VEHICULAR C UOC: LAC, LWC,	2
27	PAOZZ	04368	21237LF	BOLT, RING 1/ 1/8-12 X 2 1/4 UOC: LAC, LWC,	4
28	PFHZZ	19207	12417403	FRAME SECTION, STRUC UOC: LAC, LWC,	4
29	PAFZZ	19207	12419963	PLATE, MOUNTING UOC: LAC, LWC,	2
30	PAHZZ	19207	12417391	BRACKET, VEHICULAR C UOC: LAC, LWC,	2
31	PFHZZ	19207	12417684	BRACKET, ANGLE UOC: LAC, LWC,	1
32	PAHZZ	19207	12414307-141	BOLT, MACHINE M16 X 1.5 X 50 UOC: LAC, LWC,	50
33	PFHZZ	19207	12417681	BRACKET, ANGLE UOC: LAC, LWC,	1
34	PFFZZ	0FW39	12417896	BRACKET, LIGHT RETEN UOC: LAC, LWC,	1
35	PAHZZ	19207	12414307-143	BOLT, MACHINE M16 X 1.5 X 60 UOC: LAC, LWC,	6
36	PAFZZ	19207	12414307-147	BOLT, MACHINE M16 X 1.5 X 70 UOC: LAC, LWC,	24
36	PAOZZ	19207	12414307-139	BOLT, MACHINE M16 X 1.5 X 40 UOC: LAC, LWC,	8
37	PAFZZ	0FW39	12417895	BRACKET, LIGHT RETEN UOC: LAC,	1
38	PFFZZ	19207	12420297-001	BRACKET, ANGLE UOC: LAC, LWC,	1
39	PAHZZ	19207	12414307-150	BOLT, MACHINE M16 X 1.5 X 120 UOC: LAC, LWC,	4
40	PFFZZ	19207	12420297-002	BRACKET, MOUNTING UOC: LAC, LWC,	1
41	PAHZZ	19207	12419916	FRAME SECTION, STRUC UOC: LAC, LWC,	1
42	PAOZZ	19207	12414308-025	NUT, SELF-LOCKING, EX M16 X 1.5 UOC: LAC, LWC,	8
43	PAOZZ	19207	12418779	FRAME SECTION, STRUC UOC: LAC, LWC,	1
44	PAOZZ	19207	12414307-139	BOLT, MACHINE M6 X 1.5 X 40 UOC: LAC, LWC,	8
45	PAOZZ	19207	12418778	FRAME SECTION, STRUC UOC: LAC, LWC,	1

(1) ITEM NO	(2) SMR CODE	(3) FSCM	(4) PART NUMBER	(5) DESCRIPTION AND USABLE ON CODE (UOC)	(6) QTY
46	PAOZZ	19207	12414307-140	BOLT, MACHINE M16 X 1.5 X 45 UOC: LAC, LWC,	12
47	PGHZZ	19207	12414577	FRAME SECTION, STRUC UOC: LAC, LWC,	1
48	PAFZZ	19207	12420238	BRACKET, MOUNTING UOC: LAC, LWC,	1

END OF FIGURE

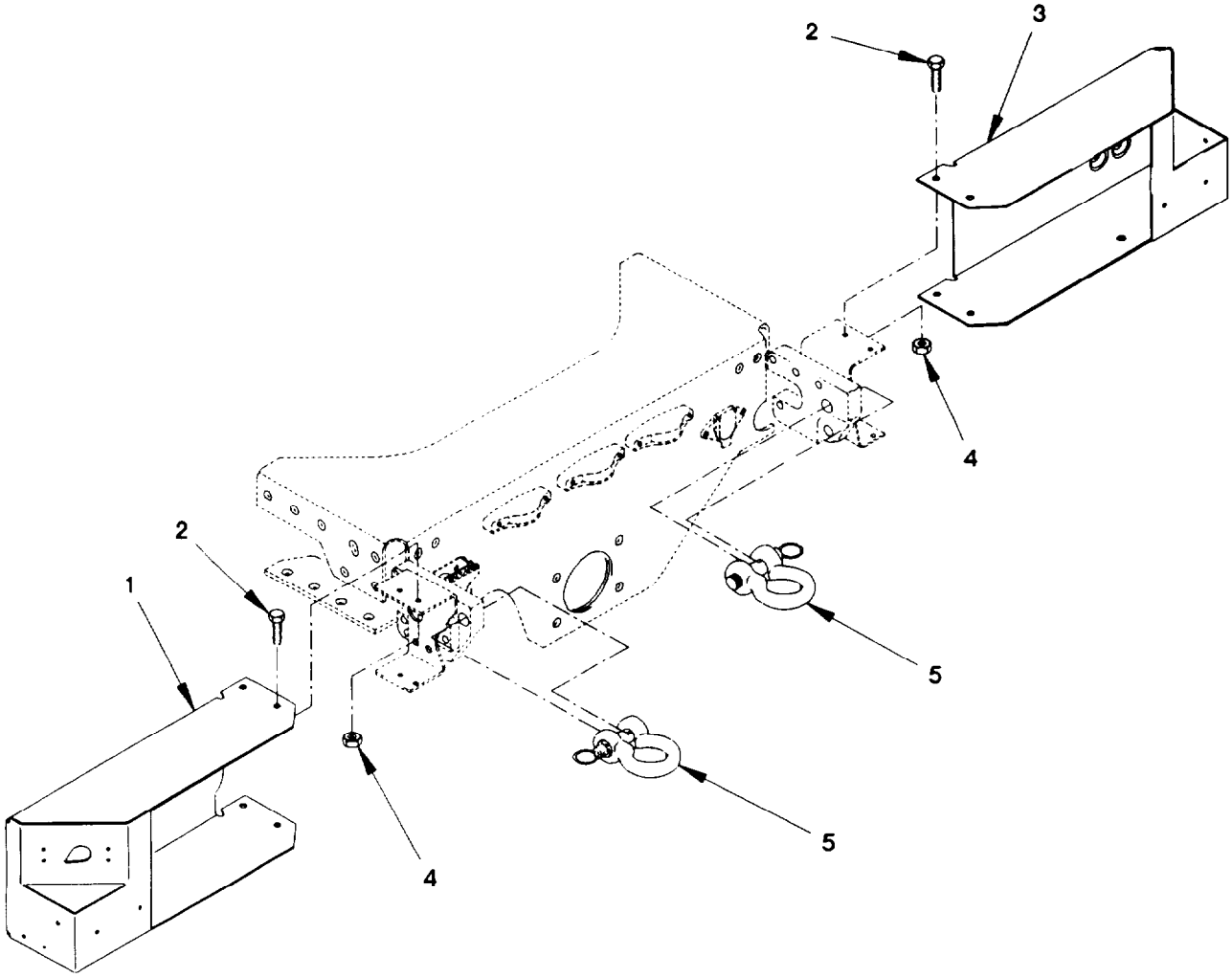

1501C-1-

Figure 165. Rear Light Carrier

(1) ITEM NO	(2) SMR CODE	(3) FSCM	(4) PART NUMBER	(5) DESCRIPTION AND USABLE ON CODE (UOC)	(6) QTY
				GROUP 1501: FRAME ASSEMBLY	
				FIG. 165 REAR LIGHT CARRIER	
1	PAOZZ	0FW39	12420533-001	BRACKET, LIGHT RETEN	1
				UOC: LAA, LAB, LAD, LWB, LWD,	
2	PAOZZ	19207	12414307-064	BOLT, MACHINE M10 X 1.5 X 30	4
				UOC: LWB, LWD,	
2	PAOZZ	19207	12414307-140	BOLT, MACHINE	4
				UOC: LWB, LWD,	
2	PAOZZ	19207	12414307-064	BOLT, MACHINE	8
				UOC: LAA, LAB, LAD,	
3	PAOZZ	0FW39	12420533-002	BRACKET, LIGHT RETEN	1
				UOC: LAA, LAB, LAD,	
3	PAOZZ	0FW39	12420533-003	BRACKET, LIGHT RETEN	1
				UOC: LWB, LWD,	
4	PAOZZ	19207	12414308-019	NUT, SELF-LOCKING, EX M10 X 1.5	8
				UOC: LAA, LAB, LAD,	
4	PAOZZ	19207	12414308-25	NUT, SELF-LOCKING, EX	4
				UOC: LWB, LWD,	
4	PAOZZ	19207	12414308-019	NUT, SELF-LOCKING, EX	4
				UOC: LWB, LWD,	
5	PAOZZ	88044	AN116-18	SHACKLE	2
				END OF FIGURE	

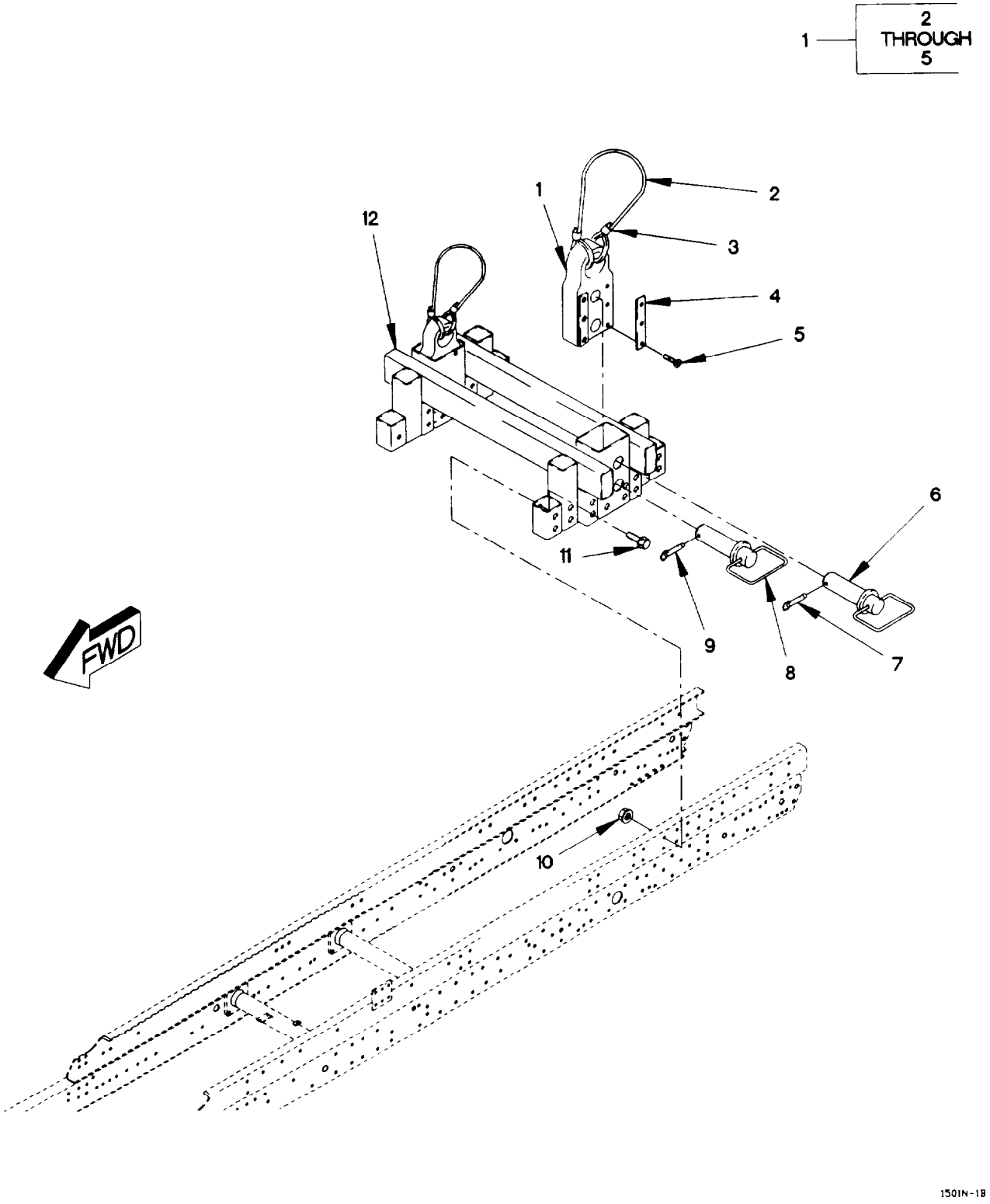

Figure 166. Airdrop Parachute Suspension Assembly

(1) ITEM NO	(2) SMR CODE	(3) FSCM	(4) PART NUMBER	(5) DESCRIPTION AND USABLE ON CODE (UOC)	(6) QTY
				GROUP 1501: FRAME ASSEMBLY FIG. 166 AIR DROP PARACHUTE SUSPENSION ASSEMBLY	
1	PAOOO	19207	12418831	SLEEVE AND SLIDE, DI UOC: LAC, LWC,	2
2	MOOZZ	81349	M83420/4-005	.ROPE, WIRE MAKE FROM WIRE P/N: M83420/4-005 (81349), CUT TO LENGTH UOC: LAC, LWC,	1
3	PAOZZ	96906	MS51844-66	.SWAGING SLEEVE, WIRE UOC: LAC, LWC,	2
4	PAOZZ	19207	12418832	.PAD, GUIDE UOC: LAC, LWC,	4
5	PAOZZ	96906	MS35190-253	.SCREW, MACHINE #8-32 X 1/2 UOC: LAC, LWC,	12
6	PAOZZ	19207	12418861	PIN STRAIGHT, HEADED UOC: LAC, LWC,	2
7	PAOZZ	09332	C7-20-R	PIN, QUICK RELEASE UOC: LAC, LWC,	2
8	PAOZZ	19207	12418862	PIN, STRAIGHT, HEADED UOC: LAC, LWC,	2
9	PAOZZ	09332	C7-15-R	PIN, QUICK RELEASE UOC: LAC, LWC,	2
10	PAFZZ	19207	12414308-027	NUT, SELF-LOCKING, EX M20 X 1.5 UOC: LAC, LWC,	32
11	PAFZZ	19207	12414307-174	BOLT, MACHINE M20 X 1.5 X 50 UOC: LAC, LWC,	32
12	PAFZZ	19207	12418909	FRAME SECTION, STRUC UOC: LAC, LWC,	1
				END OF FIGURE	

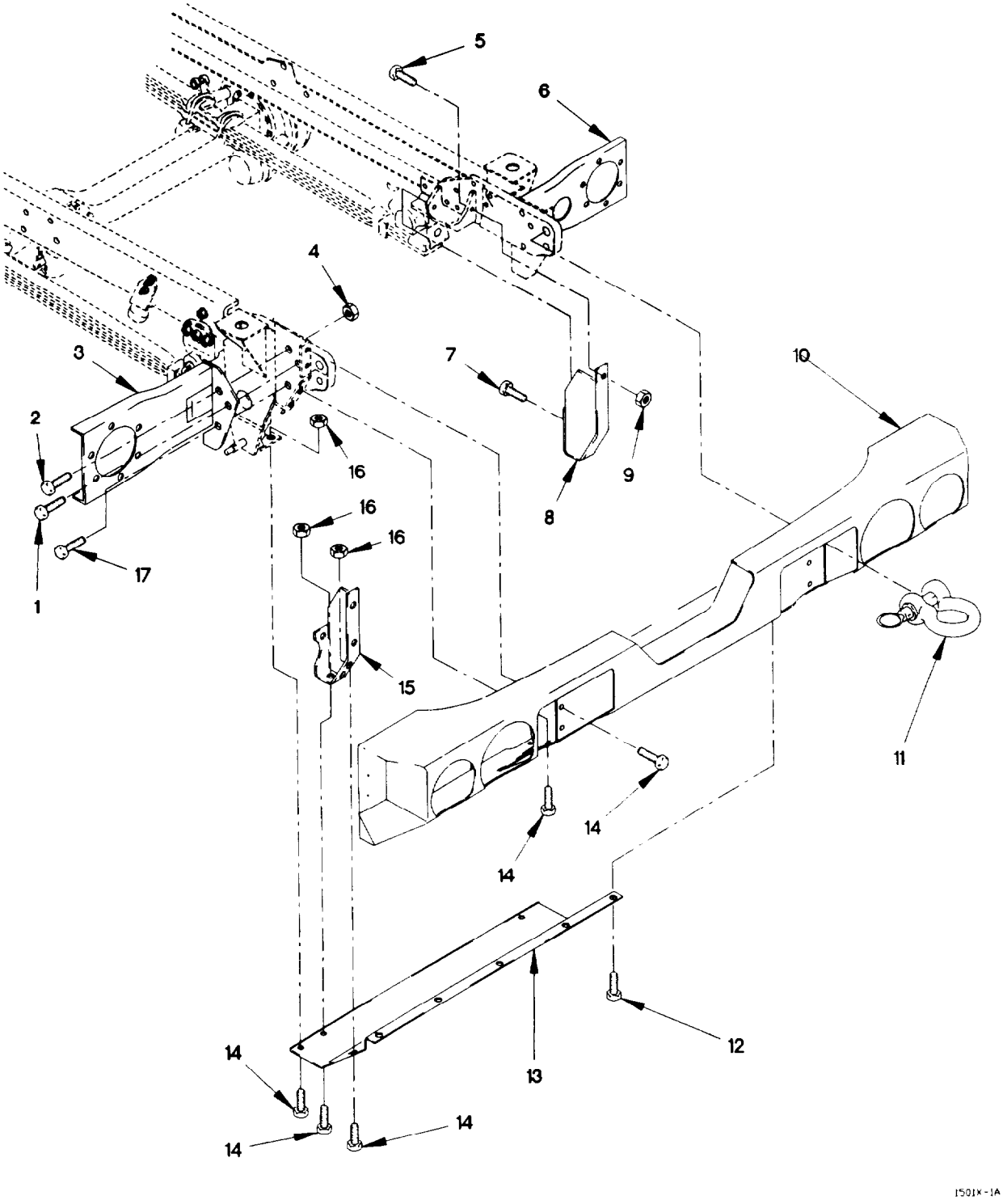

Figure 167. Front Bumper and Gravel Deflector

(1) ITEM NO	(2) SMR CODE	(3) FSCM	(4) PART NUMBER	(5) DESCRIPTION AND USABLE ON CODE (UOC)	(6) QTY
				GROUP 1501: FRAME ASSEMBLY FIG. 167 FRONT BUMPER AND GRAVEL DEFLECTOR	
1	PAOZZ	19207	12414307-146	BOLT, MACHINE M16 X 1.5 X 80	2
2	PAOZZ	19207	12414307-138	BOLT, MACHINE M16 X 1.5 X 35	2
3	PAOZZ	0FW39	12417578	BRACKET, LIGHT RETEN	1
4	PAOZZ	19207	12414308-025	NUT, SELF-LOCKING, EX M16 X 1.5	6
5	PAOZZ	19207	12414307-066	BOLT, MACHINE M10 X 1.5 X 40	2
6	PAOZZ	0FW39	12417577	BRACKET, LIGHT RETEN	1
7	PAOZZ	19207	12414307-063	BOLT, MACHINE M10 X 1.5 X 25	2
8	PAOZZ	19207	12417982	GUARD, SPLASH, VEHICU UOC: LAA, LAB, LAD, LWB, LWD,	1
8	PAOZZ	19207	12420299-002	BRACKET, VEHICULAR C UOC: LAC, LWC,	1
9	PAOZZ	19207	12414308-019	NUT, SELF-LOCKING, EX M10 X 1.5	2
10	PAOZZ	0FW39	12417942	BUMPER, VEHICULAR	1
11	PAOZZ	88044	AN116-18	SHACKLE	2
12	PAOZZ	19207	12414307-062	BOLT, MACHINE M10 X 1.5 X 20	5
13	PAOZZ	19207	12417980	GUARD, SPLASH, VEHICU	1
14	PAOZZ	19207	12414307-077	SCREW, CAP, HEXAGON H M12 X 1.5 X 30	13
15	PAOZZ	19207	12417981	BRACKET, DOUBLE ANGL UOC: LAA, LAB, LAD, LWB, LWD,	1
15	PAOZZ	19207	12420299-001	GUARD, SPLASH, VEHICU UOC: LAC, LWC,	1
16	PAOZZ	19207	12414308-021	NUT, SELF-LOCKING, EX M12 X 1.5	5
17	PAOZZ	19207	12414307-149	BOLT, MACHINE M16 X 1.5 X 110	2
				END OF FIGURE	

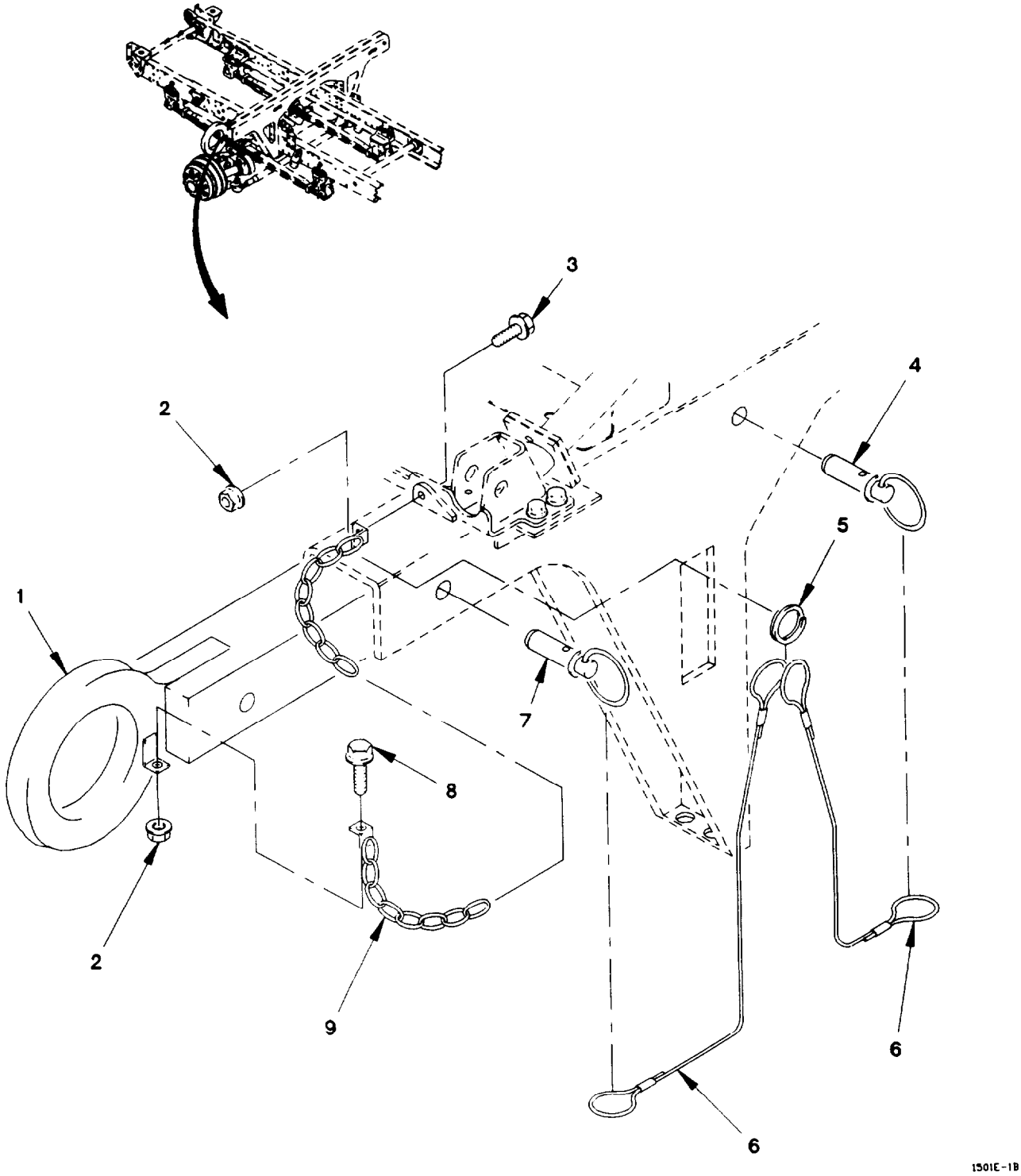

Figure 168. Front Lift Beam

(1) ITEM NO	(2) SMR CODE	(3) FSCM	(4) PART NUMBER	(5) DESCRIPTION AND USABLE ON CODE (UOC)	(6) QTY
				GROUP 1501: FRAME ASSEMBLY	
				FIG. 168 FRONT LIFT BEAM	
1	PAOZZ	19207	12418270	BEAM, HOISTING	2
2	PAOZZ	19207	12414308-004	NUT, SELF-LOCKING, EX M8 X 1.25	4
3	PAOZZ	19207	12414307-038	BOLT, HEX FLANGE	2
4	PAOZZ	09332	71001	PIN, STRAIGHT, HEADED	2
5	PAOZZ	84256	13-4CD	RING, RETAINING	2
6	PAOZZ	84256	50996-8W	WIRE ROPE ASSEMBLY MAKE FROM WIRE P/N: M83420/4-005 (81349) X16MM	4
7	PAOZZ	09332	71002	PIN, STRAIGHT, HEADED	2
8	PAOZZ	19207	12414307-037	BOLT, MACHINE M8 X 1.25 X 25	2
9	PAOZZ	19207	12419806	CHAIN ASSEMBLY, SING	2
				END OF FIGURE	

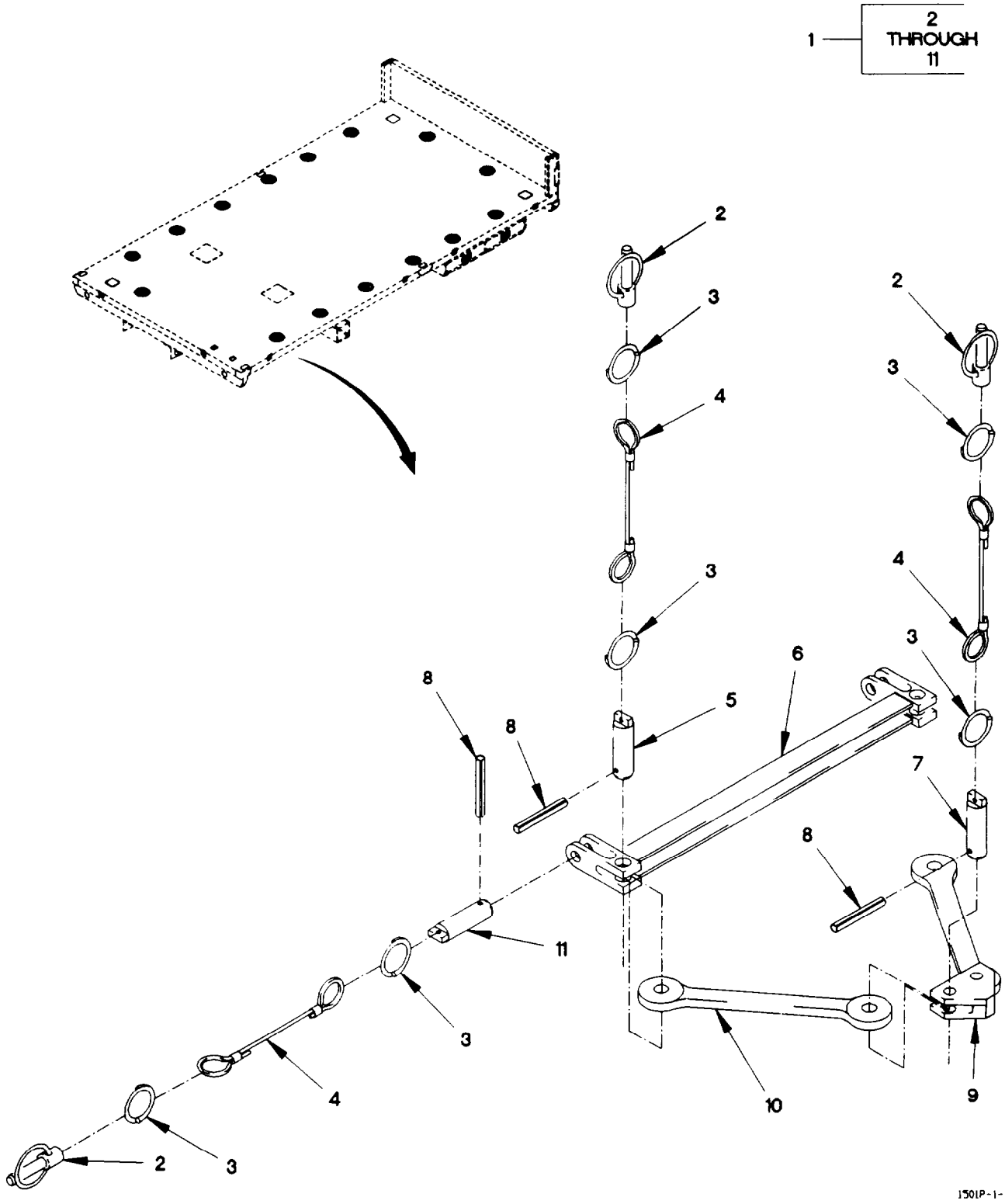

Figure 169. Air Drop Extraction Assembly

(1) ITEM NO	(2) SMR CODE	(3) FSCM	(4) PART NUMBER	(5) DESCRIPTION AND USABLE ON CODE (UOC)	(6) QTY
				GROUP 1501: FRAME ASSEMBLY	
				FIG. 169 AIR DROP EXTRACTION ASSEMBLY	
1	PAOOO	19207	12420374	SPREADER, SLING	1
				UOC: LAC, LWC,	
2	PAOZZ	0FW39	12417930	.PIN, QUICK RELEASE	6
				UOC: LAC, LWC,	
3	PAOZZ	84256	13-4CD	.RING, RETAINING	12
				UOC: LAC, LWC,	
4	PAOZZ	84256	50996-8W	.WIRE ROPE ASSEMBLY MAKE FROM WIRE	6
				P/N: M83420/4-005 (81349) X 16MM	
				UOC: LAC, LWC,	
5	PAOZZ	19207	12420370-004	.PIN, STRAIGHT, HEADLE	2
				UOC: LAC, LWC,	
6	PAOZZ	19207	12420368	.SPREADER, SLING	1
				UOC: LAC, LWC,	
7	PAOZZ	19207	12420370-003	.PIN, STRAIGHT, HEADLE	2
				UOC: LAC, LWC,	
8	PAOZZ	96906	MS16562-256	.PIN, SPRING	6
				UOC: LAC, LWC,	
9	PAOZZ	19207	12420367	.BRACKET, DOUBLE ANGL	1
				UOC: LAC, LWC,	
10	PAOZZ	19207	12420371	.LINK, HOISTING	2
				UOC: LAC, LWC,	
11	PAOZZ	19207	12420370-005	.PIN, STRAIGHT, HEADLE	2
				UOC: LAC, LWC,	
				END OF FIGURE	

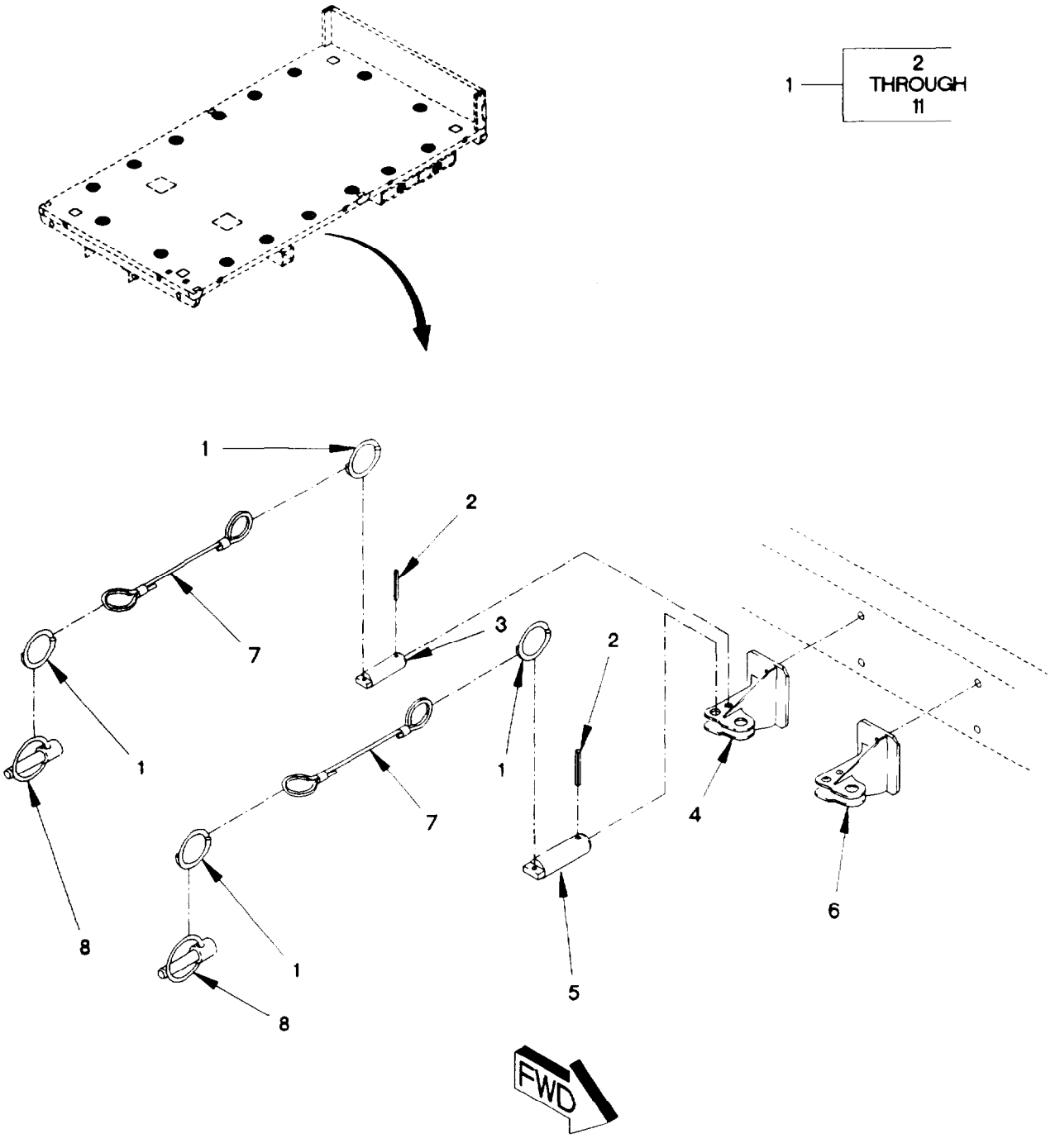

Figure 170. Air Drop Load Extraction Assembly Brackets

(1) ITEM NO	(2) SMR CODE	(3) FSCM	(4) PART NUMBER	(5) DESCRIPTION AND USABLE ON CODE (UOC)	(6) QTY
				GROUP 1501: FRAME ASSEMBLY FIG. 170 AIR DROP EXTRACTION ASSEMBLY BRACKETS	
1	PAOZZ	84256	13-4CD	RING, RETAINING UOC: LAC, LWC,	6
2	PAOZZ	96906	MS16562-256	PIN, SPRING UOC: LAC, LWC,	2
3	PAOZZ	19207	12420370-001	PIN, STRAIGHT, HEADLE UOC: LAC, LWC,	1
4	PAOZZ	19207	12420348-001	BRACKET, MOUNTING UOC: LAC, LWC,	1
5	PAOZZ	19207	12420370-002	PIN, STRAIGHT, HEADLE UOC: LAC, LWC,	1
6	PAOZZ	19207	12420348-002	BRACKET, MOUNTING UOC: LAC, LWC,	1
7	PAOZZ	84256	50996-8W	WIRE ROPE ASSEMBLY MAKE FROM P/N: WIRE M83420/4-005 (81349) X16MM UOC: LAC, LWC,	2
8	PAOZZ	0FW39	12417930	PIN, QUICK RELEASE UOC: LAC, LWC,	1
				END OF FIGURE	

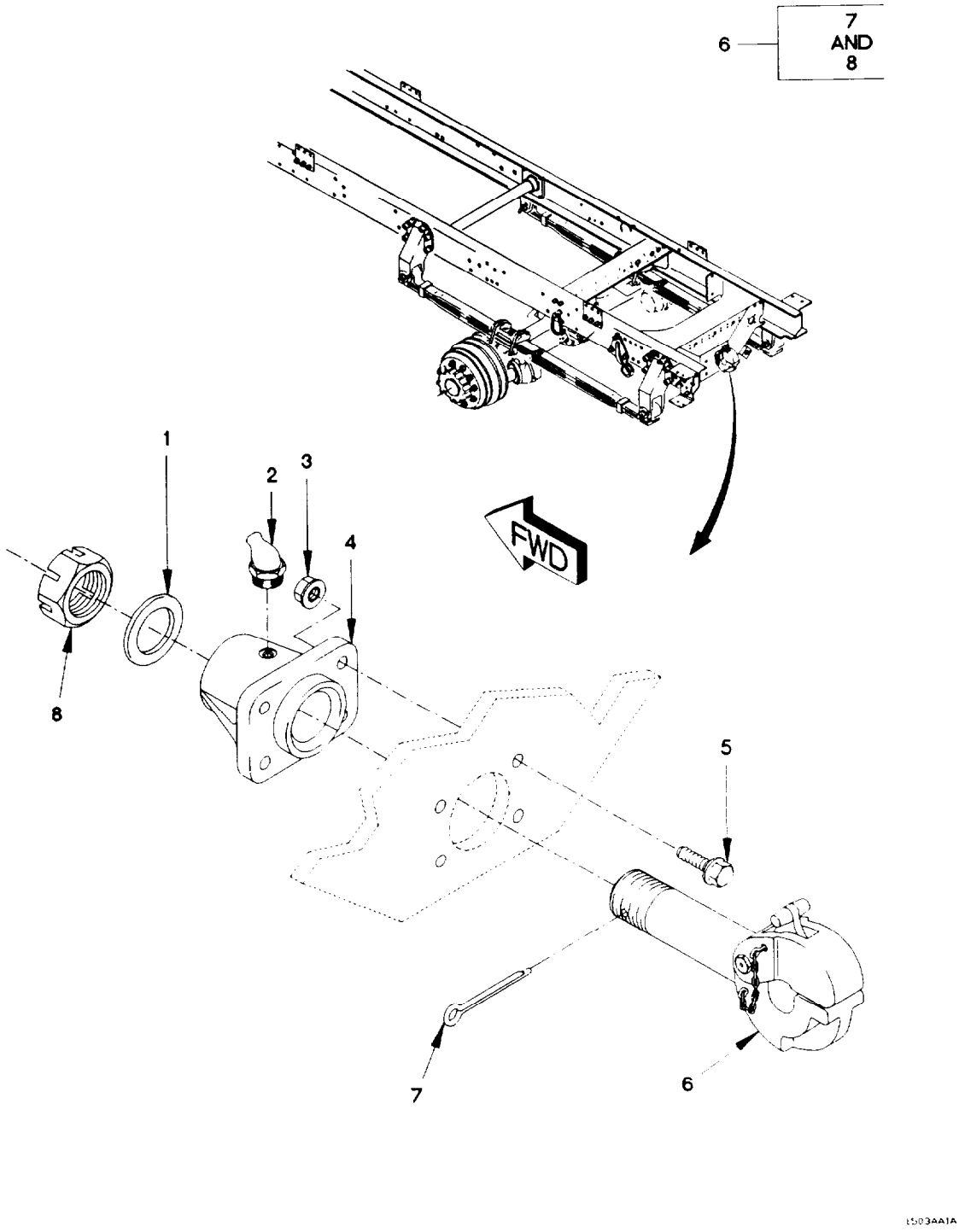

Figure 171. Pintle Hook

(1) ITEM NO	(2) SMR CODE	(3) FSCM	(4) PART NUMBER	(5) DESCRIPTION AND USABLE ON CODE (UOC)	(6) QTY
				GROUP 1503: PINTLES AND TOWING ATTACHMENTS	
				FIG. 171 PINTLE HOOK	
1	PAOZZ	19207	8694381	WASHER, FLAT 9/32	1
2	PAOZZ	96906	MS15003-4	FITTING, LUBRICATION 1/8-NPTF	1
3	PAOZZ	19207	12414308-025	NUT, SELF-LOCKING, EX M16 X 1.5	4
4	PAOZZ	19207	12418314	SUPPORT, PINTLE HOOK	1
5	PAOZZ	19207	12414307-142	BOLT, MACHINE M16 X 1.5 X 55	4
6	PAOOO	96906	MS51117-1	PINTLE ASSEMBLY, TOW	1
7	PAOZZ	74410	XB-781-1	.PIN, COTTER	1
8	PAOZZ	19207	7714911	.NUT, PLAIN, SLOTTED, H 2 1/4-12	1
				END OF FIGURE	

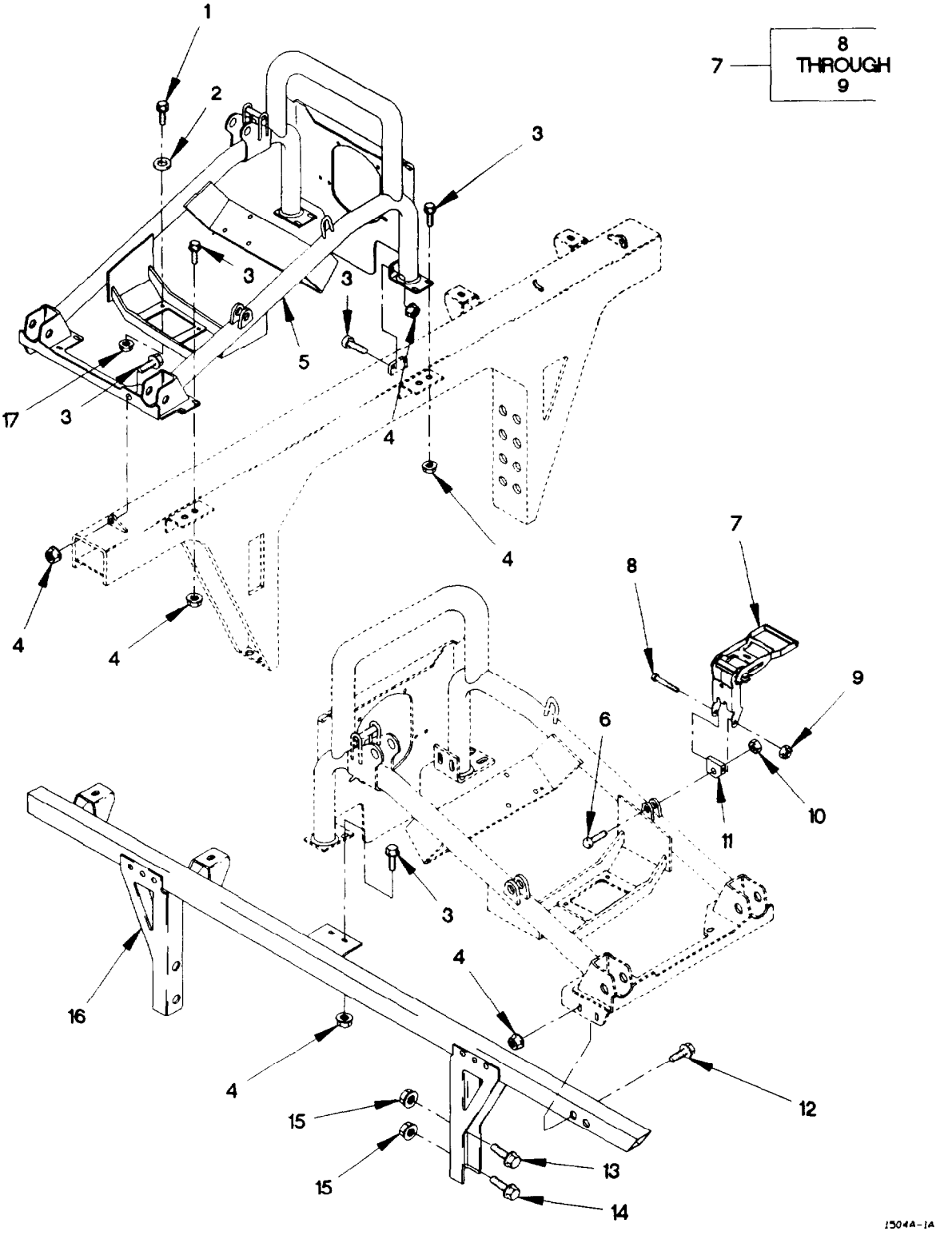

Figure 172. Spare Tire Retainer (Sheet 1 of 3)

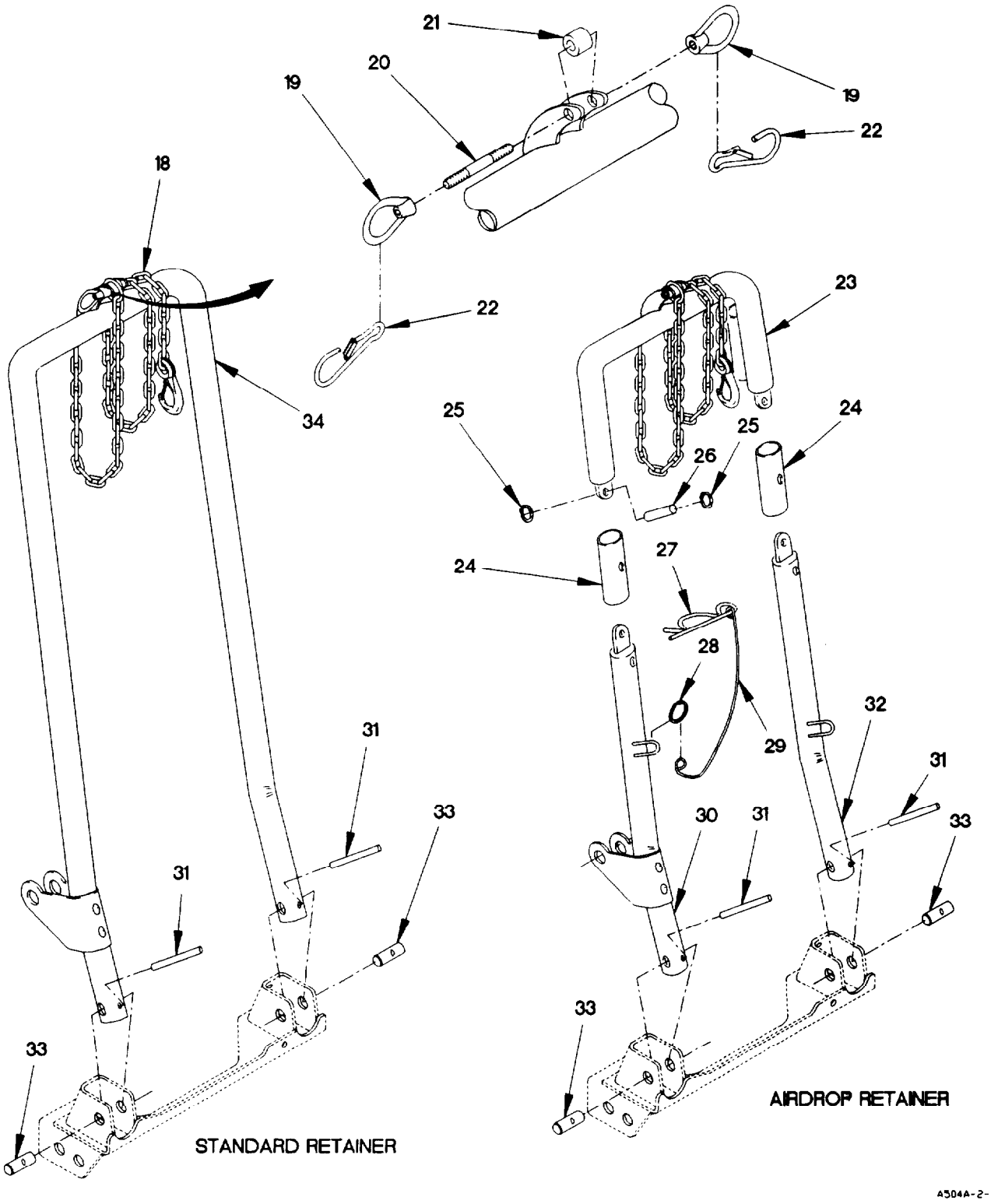

Figure 172. Spare Tire Retainer (Sheet 2 of 3)

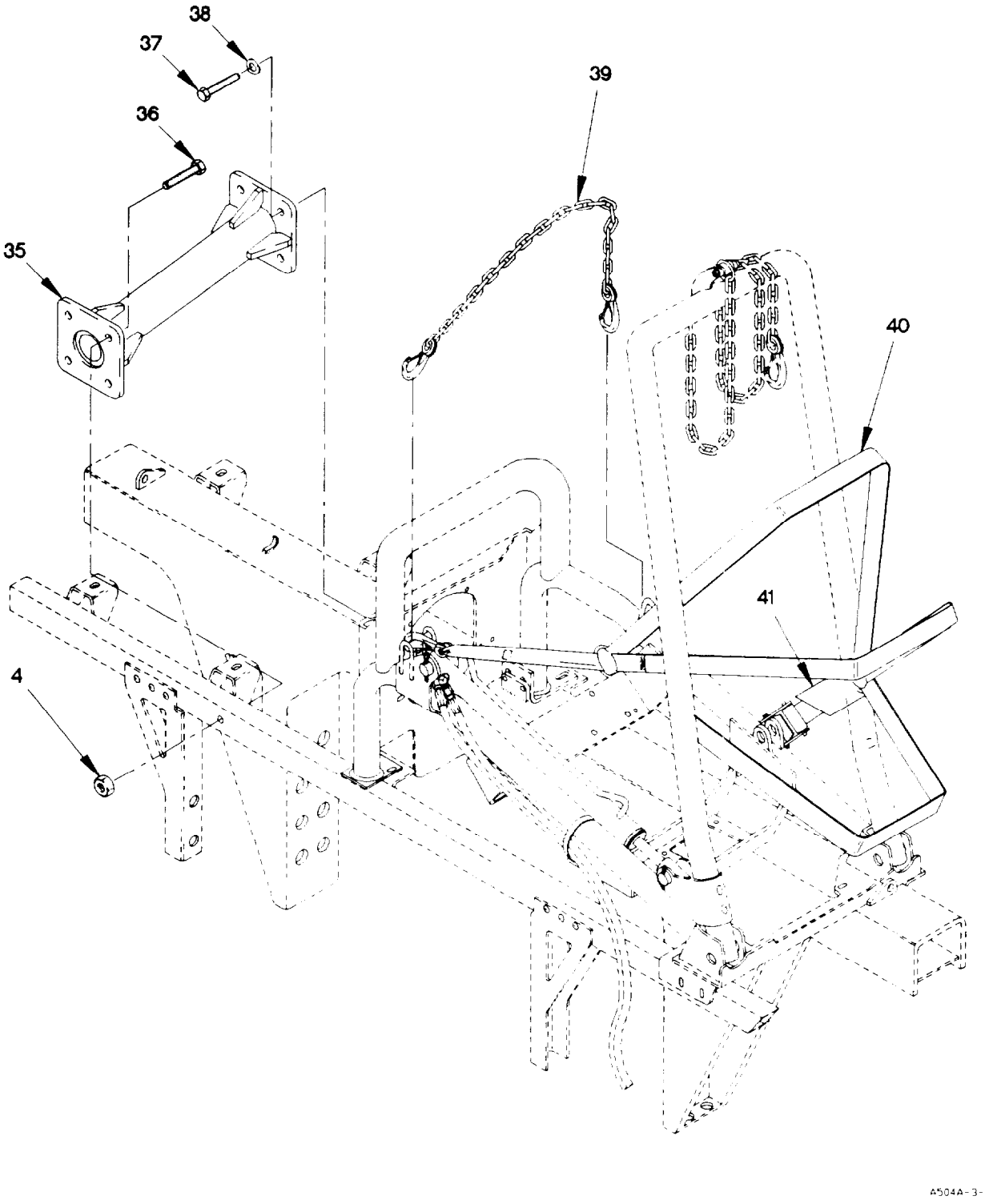

Figure 172. Spare Tire Retainer (Sheet 3 of 3)

(1) ITEM NO	(2) SMR CODE	(3) FSCM	(4) PART NUMBER	(5) DESCRIPTION AND USABLE ON CODE (UOC)	(6) QTY
				GROUP 1504: SPARE WHEEL CARRIER AND TIRE LOCK	
				FIG. 172 SPARE TIRE RETAINER	
1	PAOZZ	05523	42051-14	SCREW, CAP, HEXAGON H M8 X 1.25 X 14	4
2	PAOZZ	34914	990 3861	WASHER, FLAT M8.4	4
3	PAOZZ	19207	12414307-064	BOLT, MACHINE M10 X 1.5 X 30	9
4	PAOZZ	19207	12414308-019	NUT, SELF-LOCKING, EX M10 X 1.5	19
				UOC: LAC, LWC,	
4	PAOZZ	19207	12414308-019	NUT, SELF-LOCKING, EX M10 X 1.5	11
				UOC: LAA, LAB, LAD, LWB, LWD,	
5	PAOZZ	19207	12421269	RETAINER, SPARE TIRE	1
6	PAOZZ	19207	12414307-081	BOLT, MACHINE M12 X 1.5 X 50	1
7	PAOZZ	19207	12421192	BUCKLE	1
8	PAOZZ	80204	B1821BH050F250N	.SCREW, CAP, HEXAGON H 1/2-20 X 2.5	1
9	PAOZZ	96906	MS51922-38	.NUT, SELF-LOCKING, HE 1/2-20	1
10	PAOZZ	19207	12414308-021	NUT, SELF-LOCKING, EX M12 X 1.5	1
11	PAOZZ	19207	12421191	BRACKET, MOUNTING	1
12	PAOZZ	19207	12414307-070	BOLT, MACHINE M10 X 1.5 X 60	2
13	PAOZZ	19207	12414307-149	BOLT, MACHINE M16 X 1.5 X 110	2
				UOC: LAA, LAB, LAD, LWB, LWD,	
13	PAOZZ	19207	12414307-150	BOLT, MACHINE M16 X 1.5 X 120	2
				UOC: LAC, LWC,	
14	PAOZZ	19207	12414307-143	BOLT, MACHINE M16 X 1.5 X 60	2
				UOC: LAC, LWC,	
14	PAOZZ	19207	12414307-140	BOLT, MACHINE M16 X 1.5 X 45	2
				UOC: LAA, LAB, LAD, LWB, LWD,	
15	PAOZZ	19207	12414308-025	NUT, SELF-LOCKING, HE M16 X 1.5	4
16	PAOZZ	19207	12420569-003	BRACKET, VEHICULAR C	1
				UOC: LAC, LWC,	
16	PAOZZ	19207	12420569-001	BRACKET, VEHICULAR C	1
				UOC: LAA, LAB, LAD, LWB, LWD,	
17	PAOZZ	19207	12414315-006	NUT, SELF-LOCKING, HE M8 X 1.25	4
17	PAOZZ	19207	12414308-025	NUT, SELF-LOCKING EX M16 X 1.5	4
				UOC: LAC, LWC,	
18	PAOZZ	19207	12420552	CHAIN ASSEMBLY, SING	1
19	PAOZZ	73634	16037	NUT, EYE	2
19	PAOZZ	19207	12414307-141	BOLT, MACHINE M16 X 1.5 X 50	4
				UOC: LAC, LWC,	
20	PAOZZ	19207	12420550	STUD, PLAIN	1
21	PAOZZ	19207	1241770	BEARING, SLEEVE	1
22	PAOZZ	0FW39	12420486	SNAP HOOK	2
23	PAOZZ	19207	12417891	RETAINER, SPARE TIRE	1
				UOC: LAC, LWC,	
24	PAOZZ	19207	12417889	COUPLING, SHAFT, RIGI	2
				UOC: LAC, LWC,	
25	PAOZZ	19207	12414675-013	RING, RETAINING	4
				UOC: LAC, LWC,	

(1) ITEM NO	(2) SMR CODE	(3) FSCM	(4) PART NUMBER	(5) DESCRIPTION AND USABLE ON CODE (UOC)	(6) QTY
26	PAOZZ	19207	12417890	PIN, GROOVED, HEADLES UOC: LAC, LWC,	2
27	PAOZZ	19207	12417888	PIN, LOCK UOC: LAC, LWC,	2
28	PAOZZ	84256	13-4CD	RING, RETAINING UOC: LAC, LWC,	2
29	PAOZZ	84256	50996-8W	WIRE ROPE ASSEMBLY MAKE FROM WIRE P/N: M83420/4-005 (81349) X 16MM UOC: LAC, LWC,	2
30	PAOZZ	19207	12417886	ARM, CONTROL, VEHICUL UOC: LAC, LWC,	1
31	PAOZZ	96906	MS16562-162	PIN, SPRING	2
32	PAOZZ	19207	12417885	SUPPORT, CYLINDER UOC: LAC, LWC,	1
33	PAOZZ	19207	12419835	PIN, STRAIGHT, HEADLE	2
34	PAOZZ	19207	12417692	RETAINER, SPARE TIRE UOC: LAA, LAB, LAD, LWB, LWD,	1
35	PAOZZ	19207	12420270	BRACKET, VEHICULAR C UOC: LAC, LWC,	2
36	PAOZZ	15526	DIN933-M10X35-8. 8-A4C	SCREW, CAP HEXAGON H M10 X 1.5 X 35 UOC: LAC, LWC,	8
37	PAOZZ	0FW39	12414419-117	SCREW, CAP HEXAGON H M10 X 1.5 X 50 UOC: LAC, LWC,	8
38	PAOZZ	19207	12414560-019	WASHER, SPRING TENSI M10 UOC: LAC, LWC,	8
39	PAOZZ	7S918	F007	CHAIN ASSEMBLY, SING	1
40	PAOZZ	0PKM9	WCSI-847301	STRAP, WEBBING	1
41	PAOZZ	19207	12421456	RETAINER, SPARE TIRE	1

END OF FIGURE

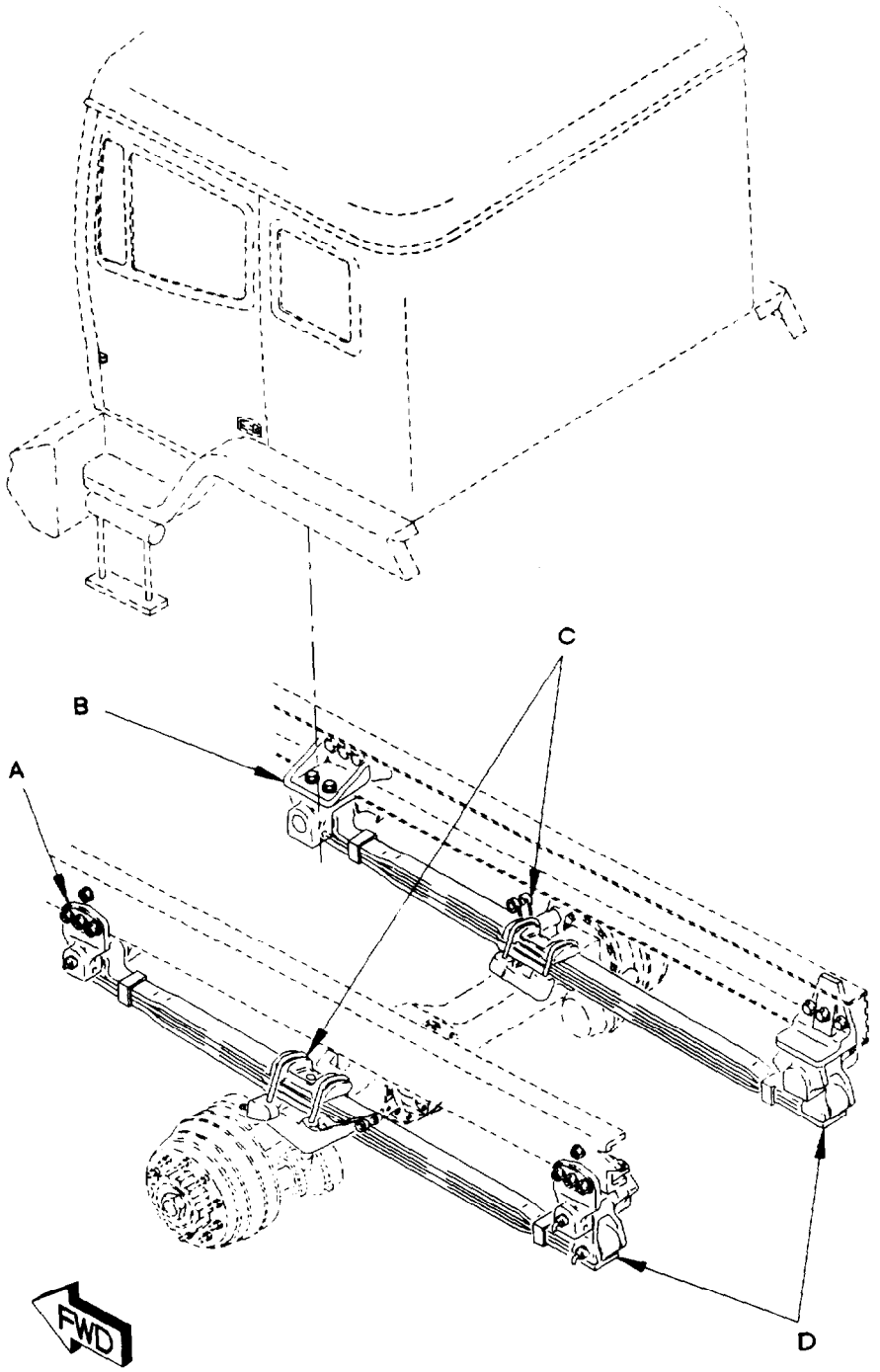

Figure 173. Front Leaf Spring Suspension (Sheet 1 of 5)

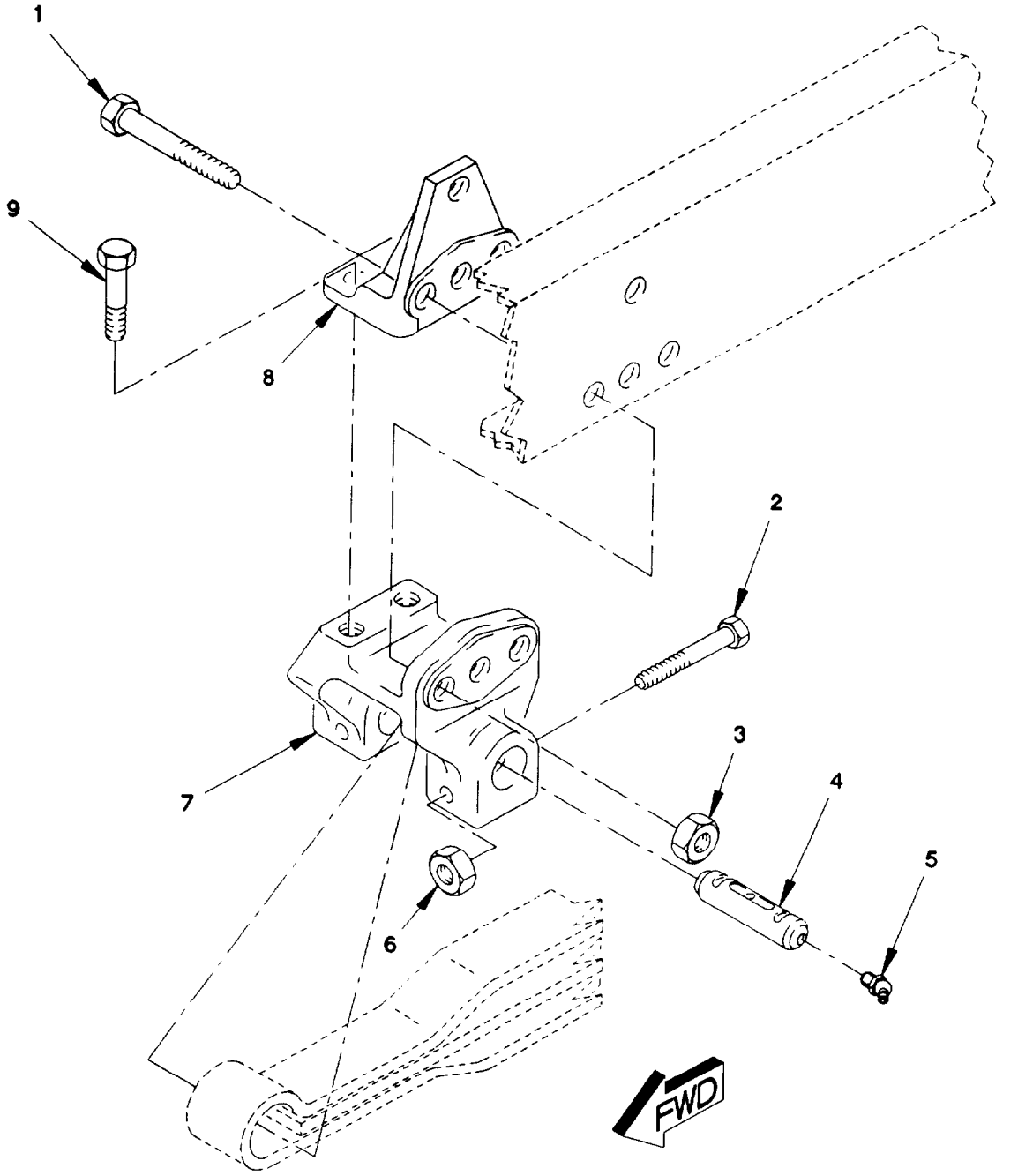

DETAIL A

1601A-2B

Figure 173. Front Leaf Spring Suspension (Sheet 2 of 5)

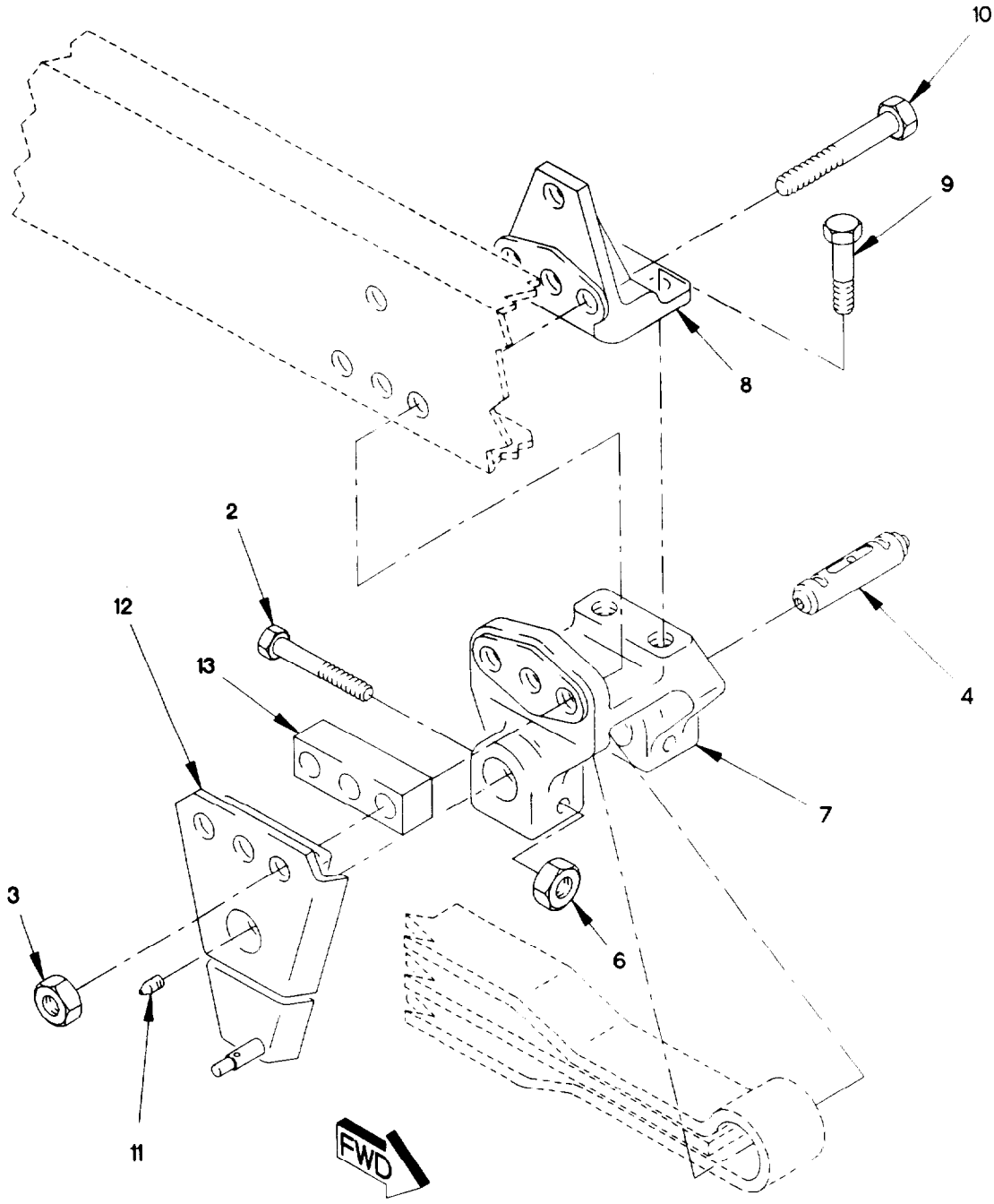

DETAIL B

1601A-3B

Figure 173. Front Leaf Spring Suspension (Sheet 3 of 5)

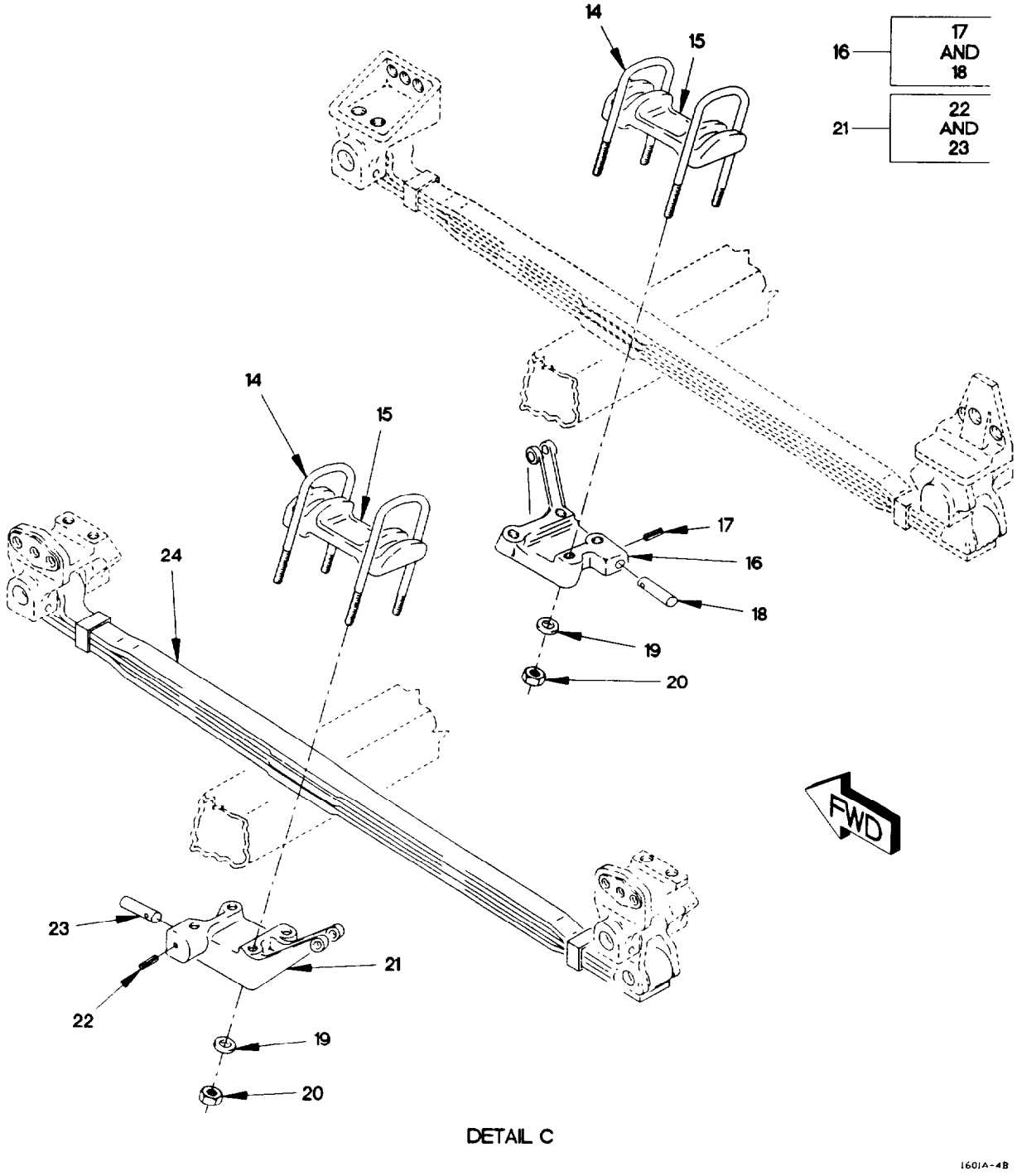

Figure 173. Front Leaf Spring Suspension (Sheet 4 of 5)

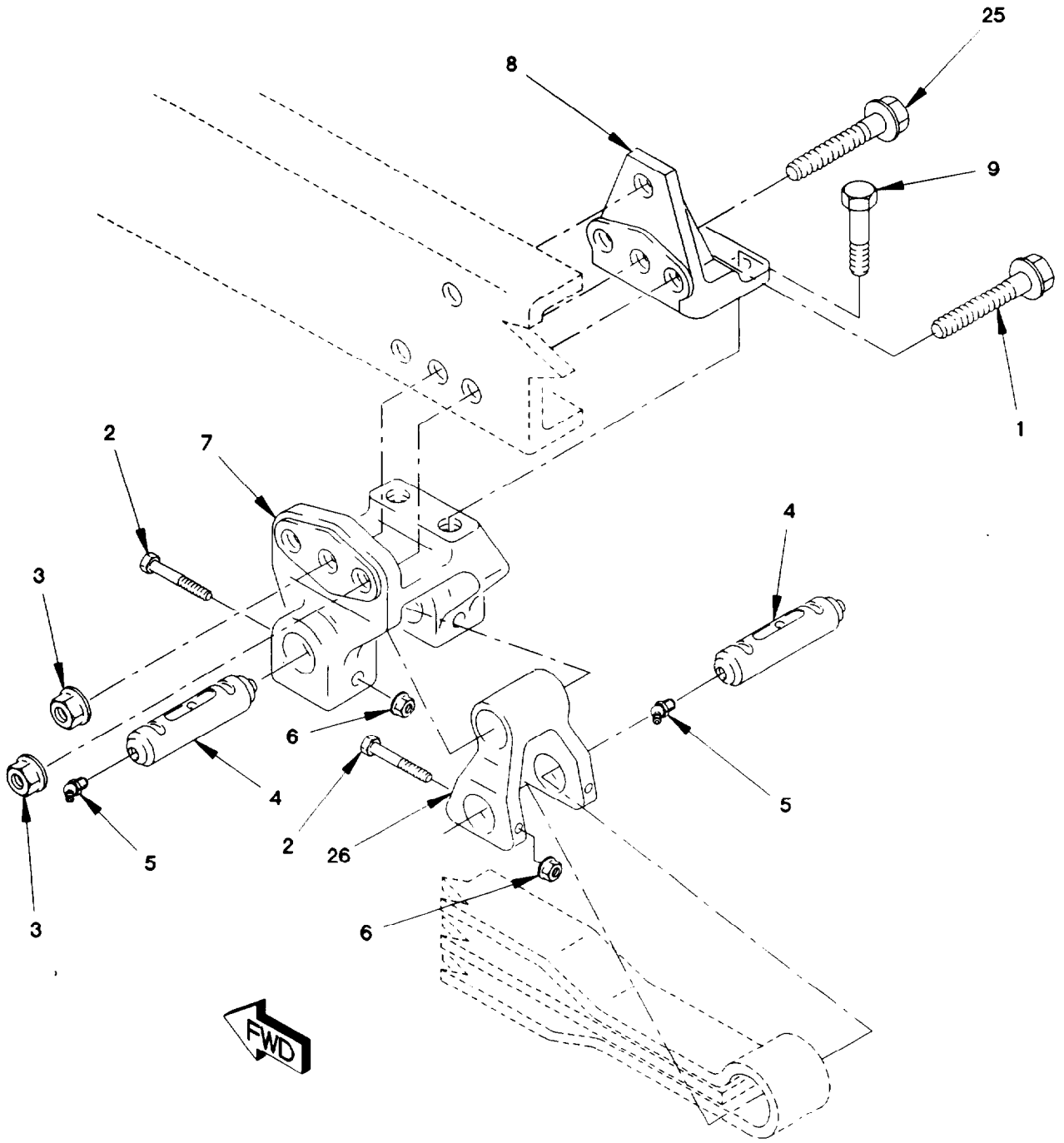

DETAIL D

1601A-58

Figure 173. Front Leaf Spring Suspension (Sheet 5 of 5)

(1) ITEM NO	(2) SMR CODE	(3) FSCM	(4) PART NUMBER	(5) DESCRIPTION AND USABLE ON CODE (UOC)	(6) QTY
				GROUP 1601: SPRINGS	
				FIG. 173 FRONT LEAF SPRING SUSPENSION	
1	PAFZZ	19207	12414307-145	BOLT, MACHINE M16 X 1.5 X 70	6
2	PAFZZ	19207	12414551-052	BOLT, MACHINE M12 X 1.5 X 70	4
3	PAFZZ	19207	12414308-025	NUT, SELF-LOCKING, EX M16 X 1.5	11
4	PAFZZ	19207	12417921	PIN, STRAIGHT, HEADL	6
5	PAFZZ	96906	MS15003-6	FITTING, LUBRICATION 1/8-NPTF	5
6	PAFZZ	19207	12414315-011	NUT, PLAIN, HEXAGON M12 X 1.5	6
7	PFFZZ	0FW39	12417407	FRAME SECTION, STRUC	4
8	PAFZZ	0FW39	12417411	HANGER, SPRING, VEHIC	4
9	PAFZZ	19207	12414307-138	BOLT, MACHINE M16 X 1.5 X 35	4
10	PAFZZ	19207	12414307-147	BOLT, MACHINE M16 X 1.5 X 70	3
11	PAFZZ	96906	MS15003-1	FITTING, LUBRICATION 1/8-NPTF	1
12	PAFZZ	0FW39	12417919	BRACKET, VEHICULAR C	1
13	PAFZZ	19207	12417922	PLATE, MOUNTING	1
14	PAFZZ	19207	12417904-002	BOLT, U	4
15	PAFZZ	19207	12417395	PLATE, MOUNTING	2
16	PAFZZ	19207	12417405	SHOCK ABSORBER, DIRE MOUNTING BRACKET	1
17	PAOZZ	19207	12417964-017	.PIN, SPRING	1
18	PAOZZ	19207	12417390	.PIN, STRAIGHT, HEADLE	1
19	PAFZZ	81349	D63546/8-06G	WASHER, CONCAVE 21MM	8
20	PAFZZ	19207	12418084	NUT, SELF-LOCKING, EX M18 X 1.5	8
21	PAFZZ	0FW39	12417416	BRACKET, SHOCK, ABSOR	1
22	PAOZZ	19207	12417964-017	.PIN, SPRING	1
23	PAOZZ	19207	12417390	.PIN, STRAIGHT, HEADLE	1
24	PAFZZ	0FW39	12417277	SPRING ASSEMBLY, LEA	2
25	PAFZZ	19207	12414307-149	BOLT, MACHINE M16 X 1.5 X 110	2
26	PAFZZ	19207	12417925	SHACKLE, LEAF SPRING	2
				END OF FIGURE	

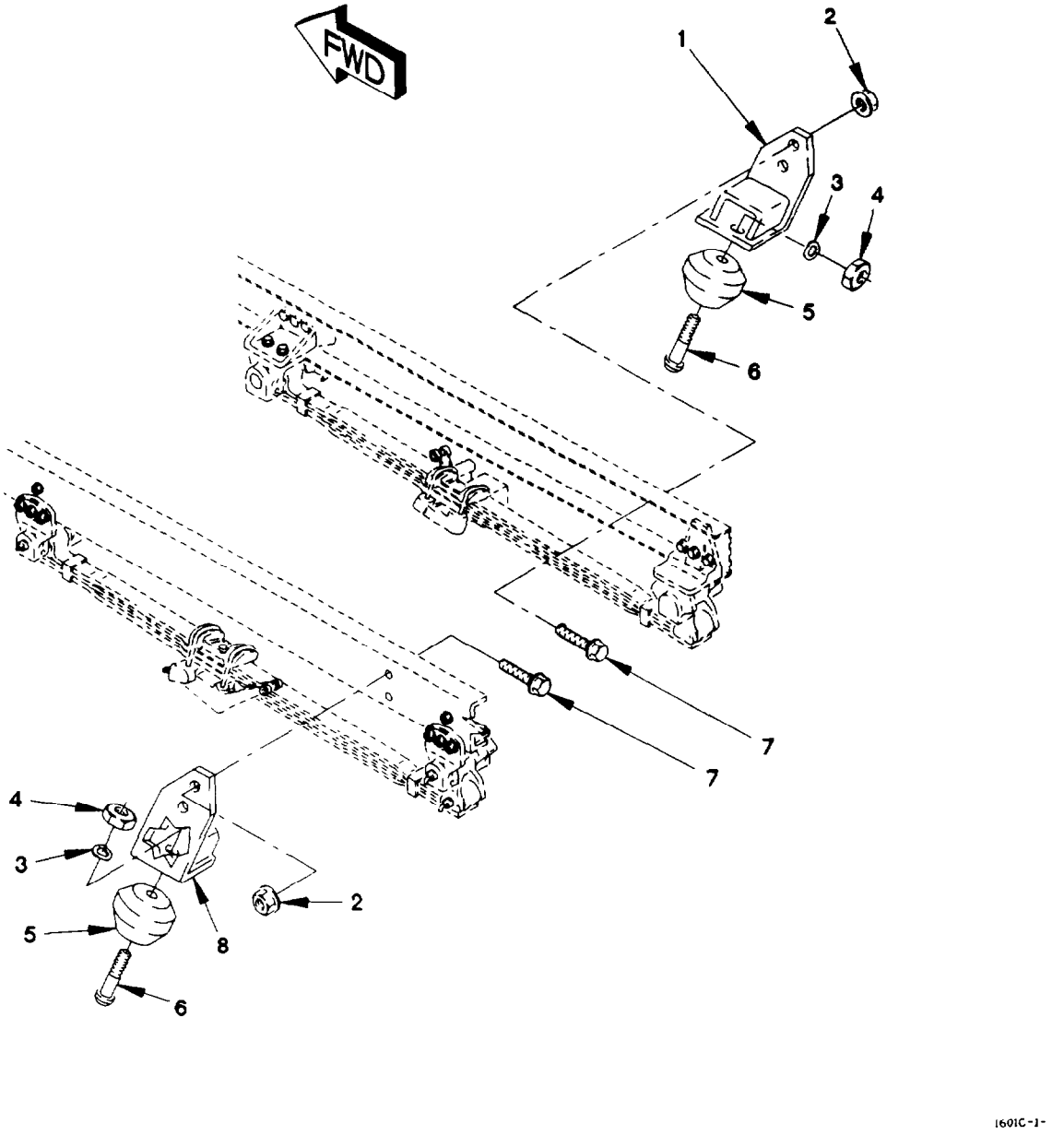

Figure 174. Front Resilient Mount and Angle Brackets

(1) ITEM NO	(2) SMR CODE	(3) FSCM	(4) PART NUMBER	(5) DESCRIPTION AND USABLE ON CODE (UOC)	(6) QTY
				GROUP 1601: SPRINGS FIG. 174 FRONT RESILIENT MOUNT AND ANGLE BRACKETS	
1	PAFZZ	19207	12417274	BRACKET, ANGLE	1
2	PAFZZ	19207	12414308-007	NUT, SELF-LOCKING, EX M12 X 1.5	4
3	PAOZZ	19207	12414560-019	WASHER, SPRING TENSI M10	2
4	PAOZZ	19207	12414474-014	NUT, PLAIN, HEXAGON M10 X 1.25	2
5	PAOZZ	81860	25950	MOUNT, RESILIENT	2
6	PAOZZ	19207	12378774	BOLT, SHOULDER M10 X 1.25 X 40	2
7	PAFZZ	19207	12414307-079	BOLT, MACHINE M12 X 1.5 X 40	4
8	PAFZZ	19207	12417273	BRACKET, ANGLE	1
				END OF FIGURE	

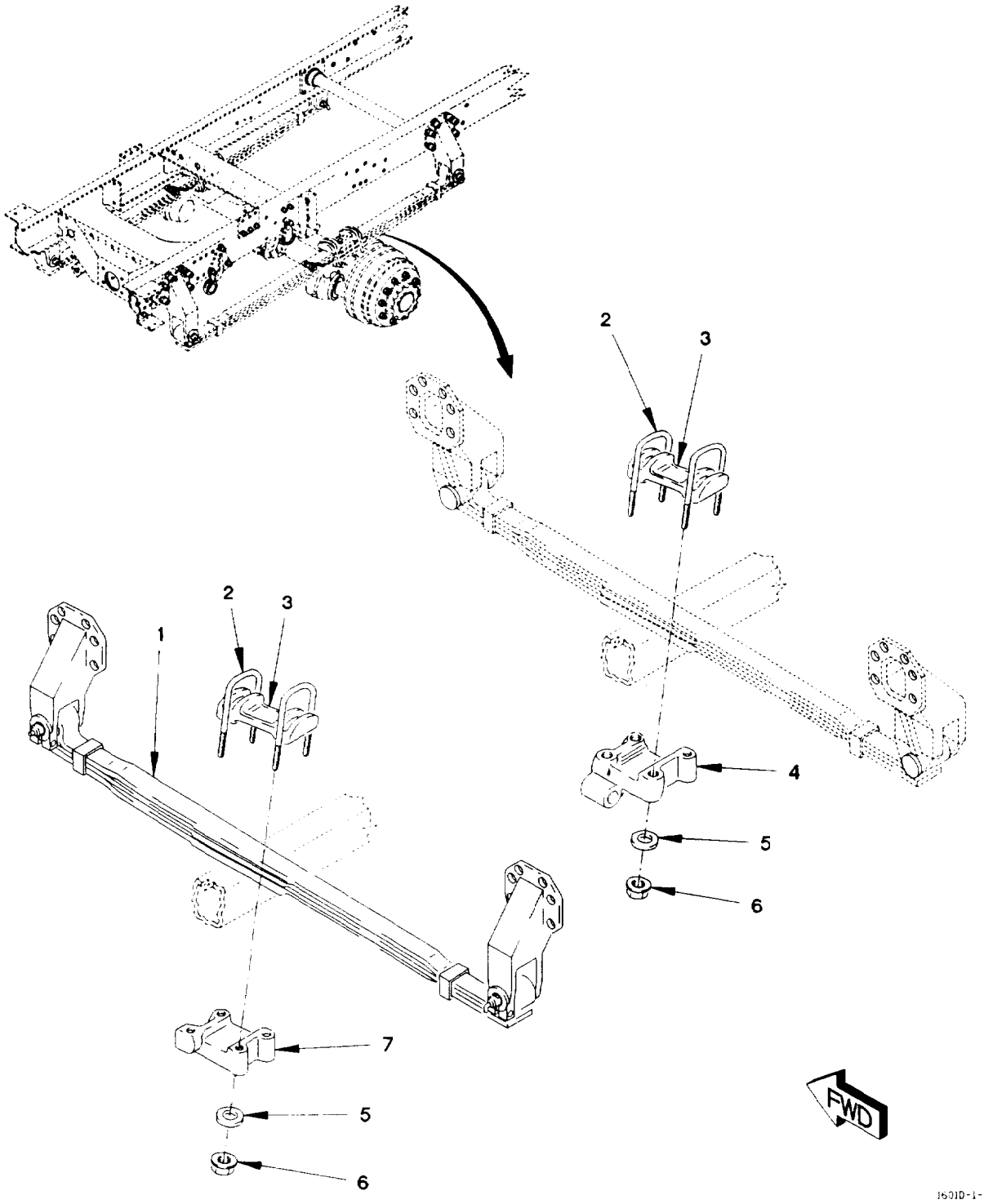

Figure 175. Rear Leaf Spring and Torque Rods (Sheet 1 of 3)

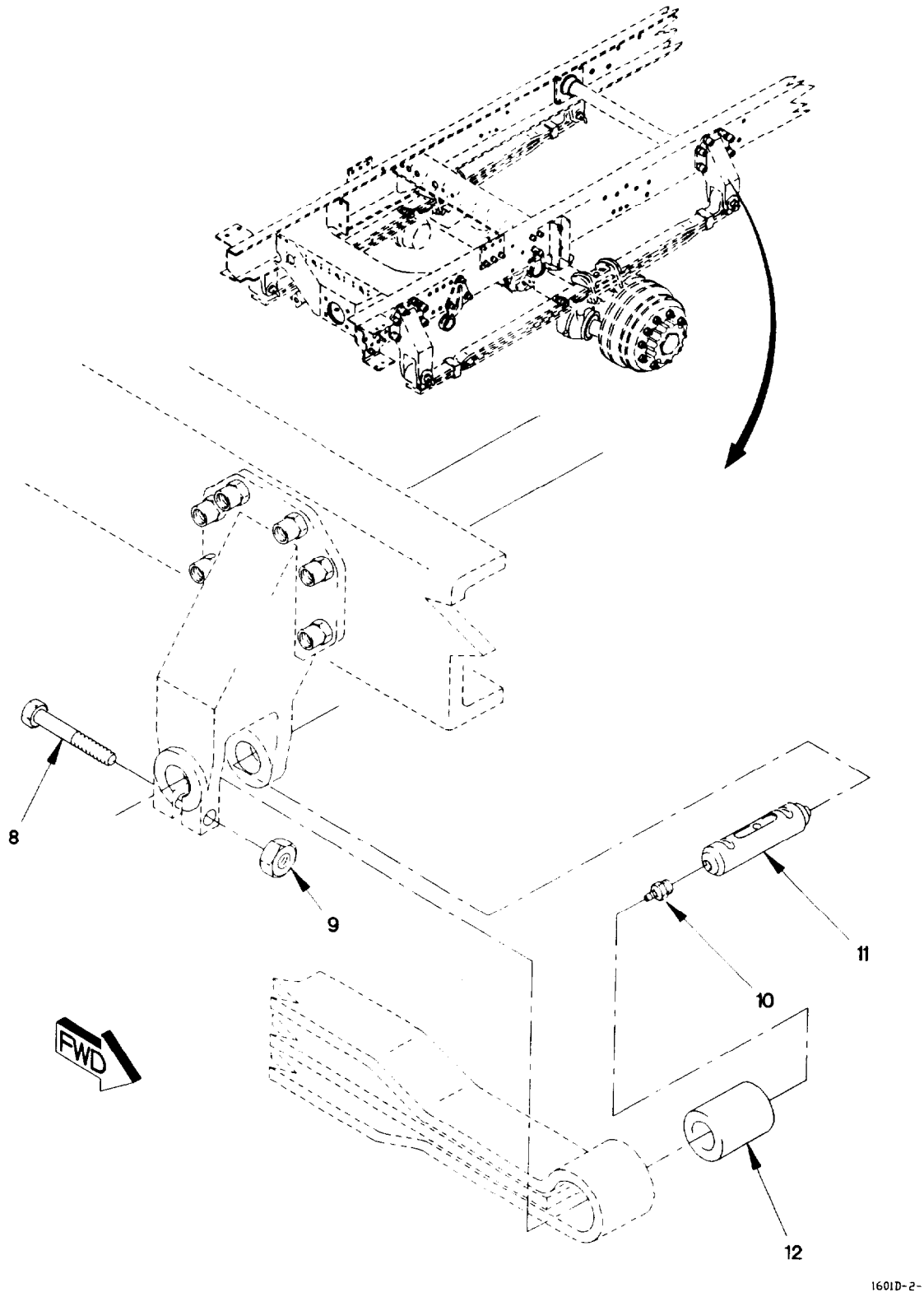

Figure 175. Rear Leaf Spring and Torque Rods (Sheet 2 of 3)

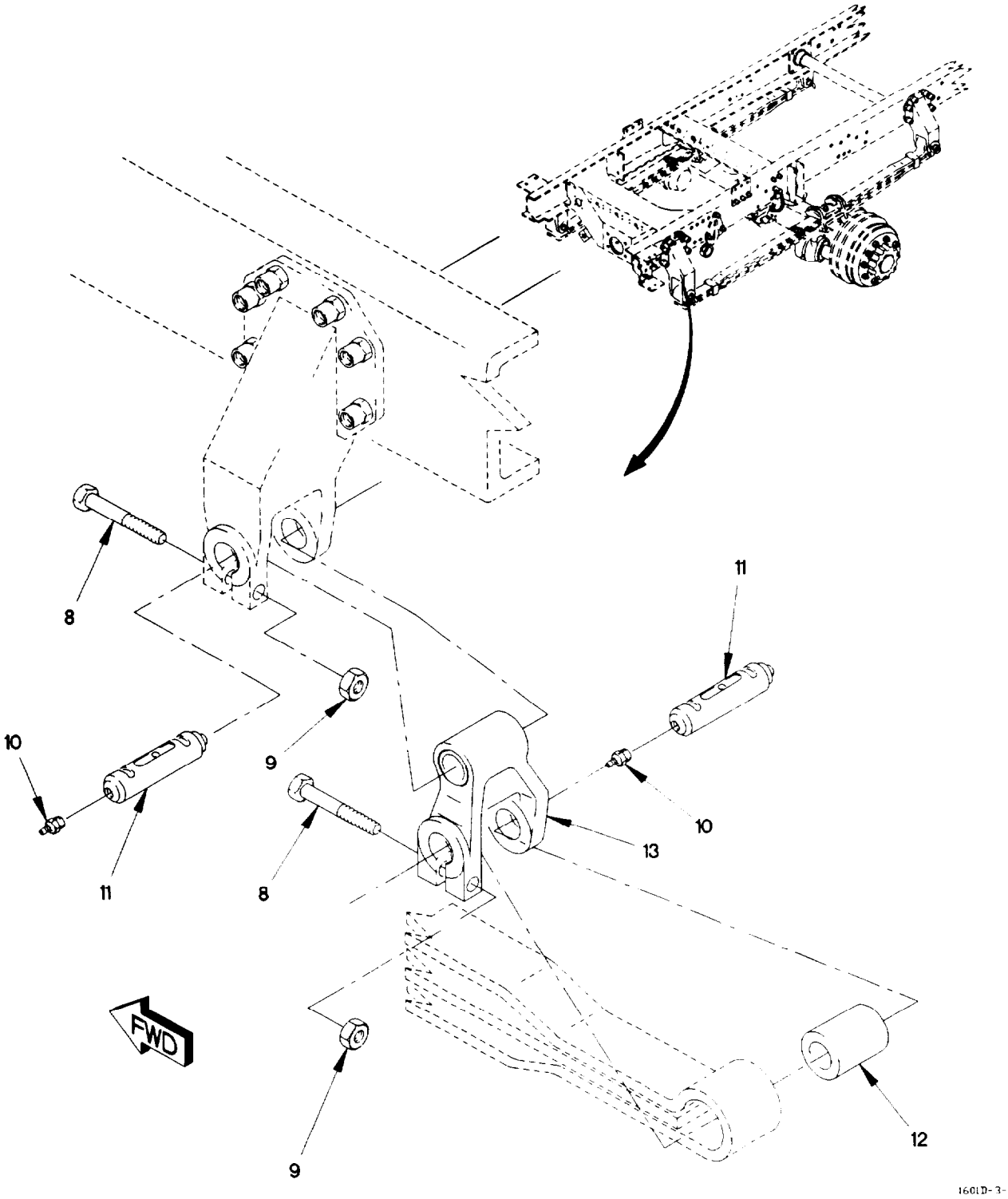

Figure 175. Rear Leaf Spring and Torque Rods (Sheet 3 of 3)

(1) ITEM NO	(2) SMR CODE	(3) FSCM	(4) PART NUMBER	(5) DESCRIPTION AND USABLE ON CODE (UOC)	(6) QTY
				GROUP 1601: SPRINGS	
				FIG. 175 REAR LEAF SPRING AND TORQUE RODS	
1	PAFZZ	0FW39	12417277	SPRING ASSEMBLY, LEA	2
				UOC: LAD, LWD,	
1	PAFZZ	0FW39	12417451	SPRING ASSEMBLY, LEA	2
				UOC: LAA, LAB, LAC, LWB, LWC,	
2	PAFZZ	19207	12417904-002	BOLT, U	4
3	PAFZZ	0FW39	12417393	SEAT, HELICAL COMPRE	2
4	PAFZZ	19207	12417388	HANGER, SPRING, VEHIC	1
5	PAFZZ	81349	D63546/8-06G	WASHER, CONCAVE 21MM	8
6	PAFZZ	19207	12418084	NUT, SELF-LOCKING, EX M18 X 1.5	8
7	PAFZZ	19207	12419190	HANGER, SPRING, VEHIC	1
8	PAFZZ	19207	12414551-052	BOLT, MACHINE M12 X 1.5 X 70	6
9	PAFZZ	19207	12414315-011	NUT, PLAIN, HEXAGON M12 X 1.5	6
10	PAOZZ	96906	MS15003-1	FITTING, LUBRICATION 1/8-NPTF	6
11	PAFZZ	19207	12417921	PIN, STRAIGHT, HEADL	6
12	PAFZZ	0FW39	12417918	BUSHING, SLEEVE	4
13	PAFZZ	19207	12417925	SHACKLE, LEAF SPRING	2
				END OF FIGURE	

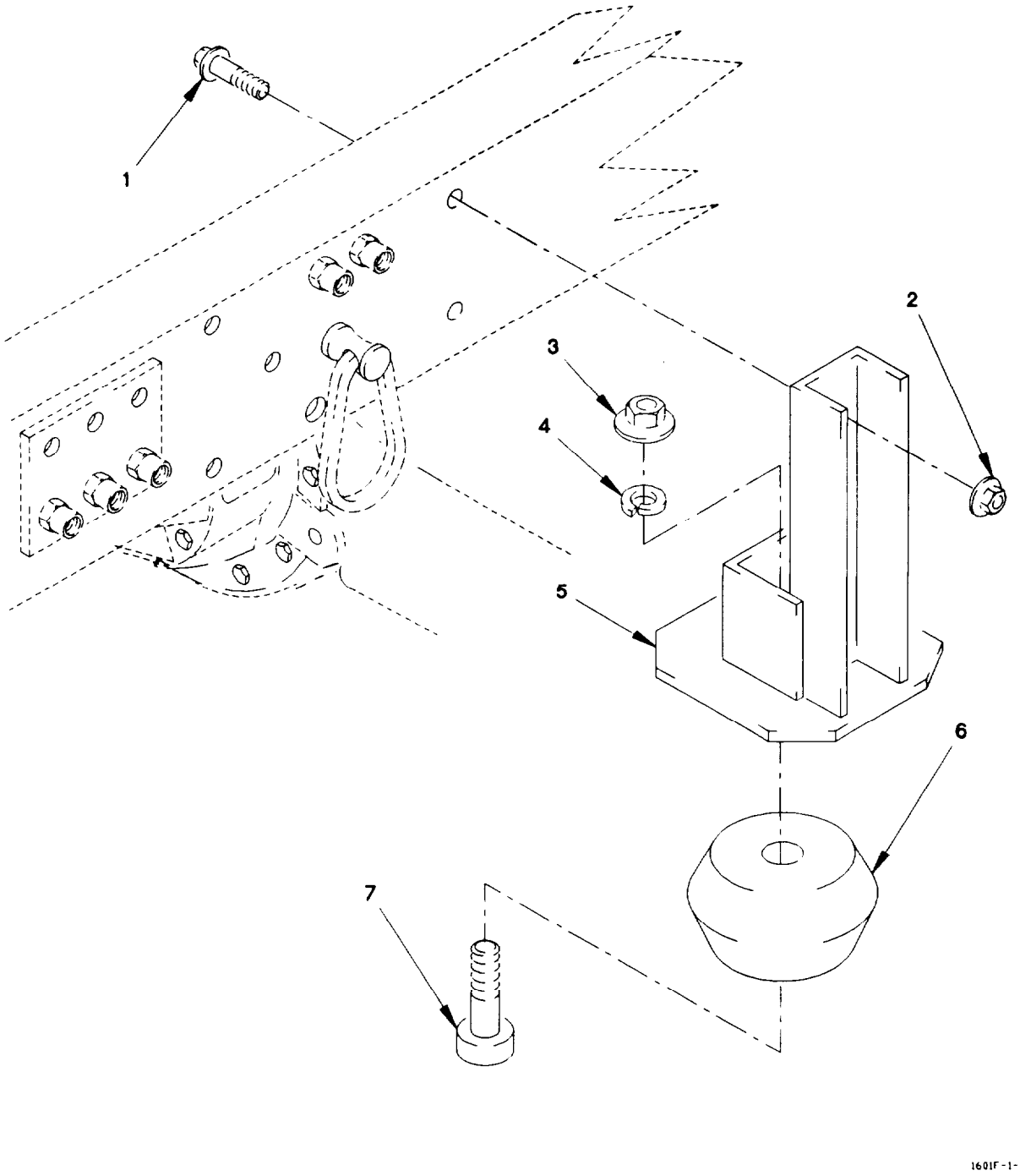

Figure 176. Rear Resilient Mount and Mechanical Stop

(1) ITEM NO	(2) SMR CODE	(3) FSCM	(4) PART NUMBER	(5) DESCRIPTION AND USABLE ON CODE (UOC)	(6) QTY
				GROUP 1601: SPRINGS FIG. 176 REAR RESILIENT MOUNT AND MECHANICAL STOP	
1	PAOZZ	19207	12414307-138	BOLT, MACHINE M16 X 1.5 X 35	4
2	PAOZZ	19207	12414308-025	NUT, SELF-LOCKING, EX M16 X 1.5	4
3	PAOZZ	19207	12414474-017	NUT, PLAIN, HEXAGON M12 X 1.5	2
4	PAOZZ	62445	110 7289	WASHER, LOCK M13	2
5	PAOZZ	19207	12418022	STOP, MECHANICAL	2
6	PAOZZ	0FW39	12418030	MOUNT, RESILIENT	2
7	PAOZZ	19207	12418023	BOLT, SHOULDER M12 X 1.5 X 45	2
				END OF FIGURE	

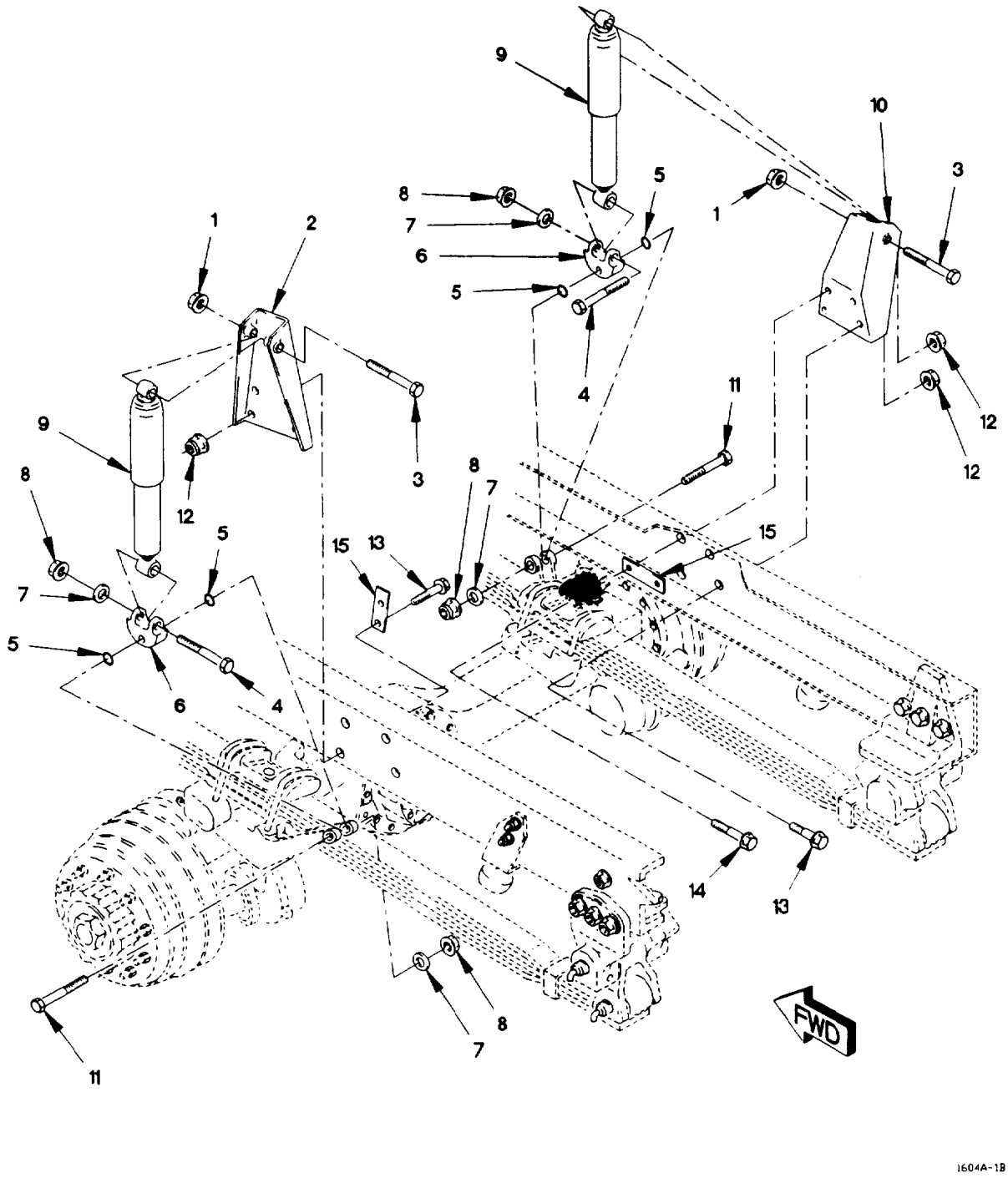

Figure 177. Front Shocks

(1) ITEM NO	(2) SMR CODE	(3) FSCM	(4) PART NUMBER	(5) DESCRIPTION AND USABLE ON CODE (UOC)	(6) QTY
				GROUP 1604: SHOCK ABSORBER EQUIPMENT	
				FIG. 177 FRONT SHOCKS	
1	PAOZZ	19207	12414308-025	NUT, SELF-LOCKING, EX M16 X 1.5	2
2	PAFZZ	19207	12418280	BRACKET, VEHICULAR C	1
3	PAOZZ	19207	12418012-004	SCREW, CAP, HEXAGON H M16 X 1.5 X 128.5	2
4	PAOZZ	19207	12414551-124	BOLT, MACHINE M20 X 1.5 X 110	2
5	PAOZZ	02697	2-210N674-7	O-RING	4
6	PAOZZ	19207	12419051	BRACKET, EYE, ROTATIN	2
7	PAOZZ	19207	12414473-020	WASHER, FLAT M23	4
8	PAOZZ	19207	12414308-027	NUT, SELF-LOCKING, EX M20 X 1.5	4
9	PAOZZ	0FW39	12414357	SHOCK ABSORBER, DIRE	2
10	PAFZZ	19207	12418016	BRACKET, VEHICULAR C	1
11	PAOZZ	19207	12417951-100	BOLT, SHOULDER M20 X 1.5 X 115	2
12	PAFZZ	19207	12414308-007	NUT, SELF-LOCKING, EX M12 X 1.5	8
13	PAFZZ	19207	12414307-079	BOLT, MACHINE M12 X 1.5 X 40	6
14	PAFZZ	19207	12414307-080	BOLT, MACHINE M12 X 1.5 X 45	2
15	PAFZZ	19207	12418014	PLATE, MOUNTING	3
				END OF FIGURE	

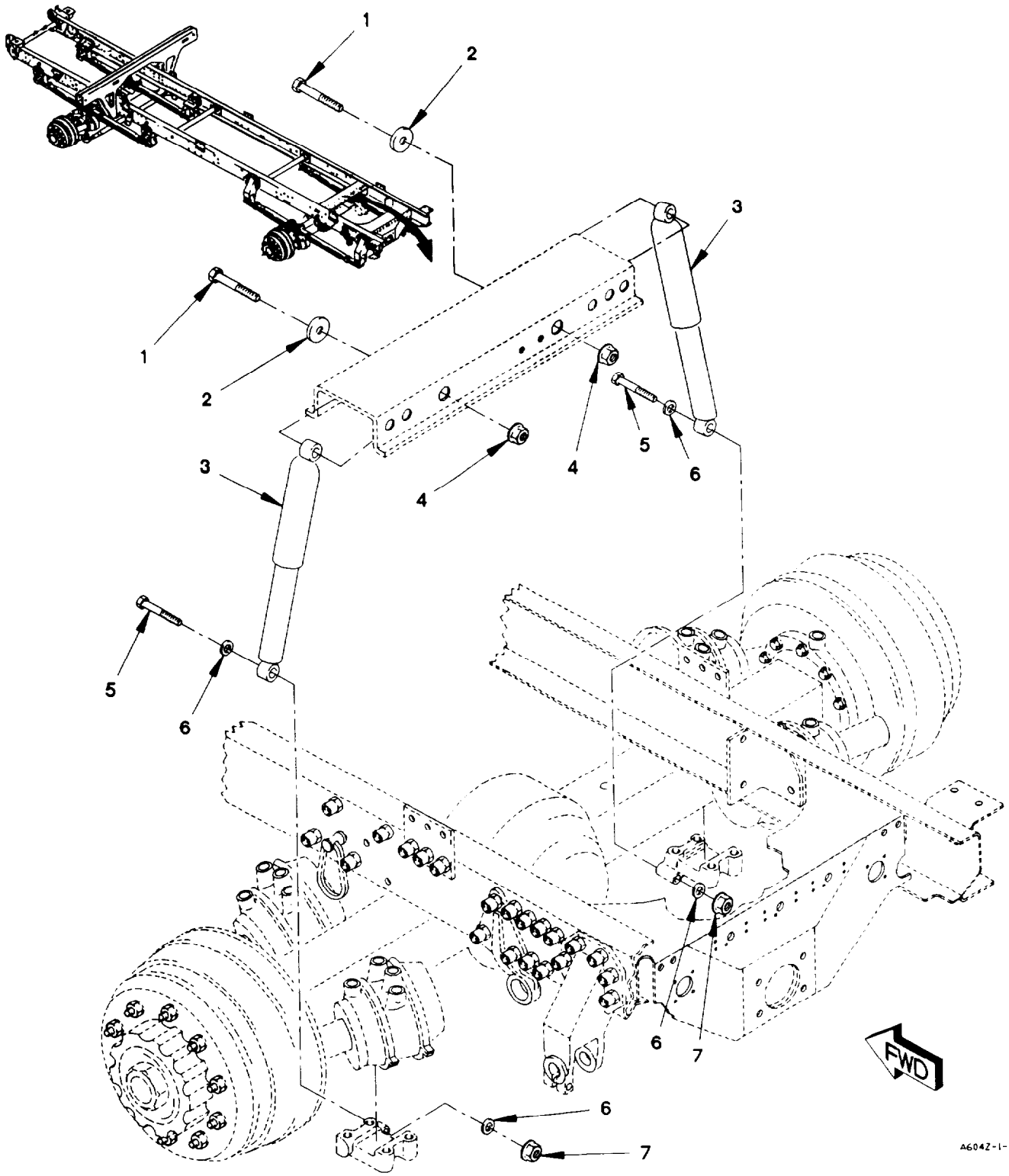

Figure 178. Rear Shocks

(1) ITEM NO	(2) SMR CODE	(3) FSCM	(4) PART NUMBER	(5) DESCRIPTION AND USABLE ON CODE (UOC)	(6) QTY
				GROUP 1604: SHOCK ABSORBER EQUIPMENT FIG. 178 REAR SHOCKS	
1	PAOZZ	19207	12418012-001	SCREW, CAP, HEXAGON H M16 X 1.5 X 128.5	2
2	PAOZZ	45152	2AW725	WASHER, FLAT M17	2
3	PAOZZ	0FW39	12414357	SHOCK ABSORBER, DIRE	2
4	PAOZZ	19207	12414308-025	NUT, SELF-LOCKING, EX M16 X 1.5	2
5	PAOZZ	19207	12414551-133	BOLT, MACHINE M20 X 2 X 150	2
6	PAFZZ	19207	12414473-020	WASHER, FLAT M23	4
7	PAOZZ	19207	12414315-021	NUT, PLAIN, HEXAGON M20 X 2	2
				END OF FIGURE	

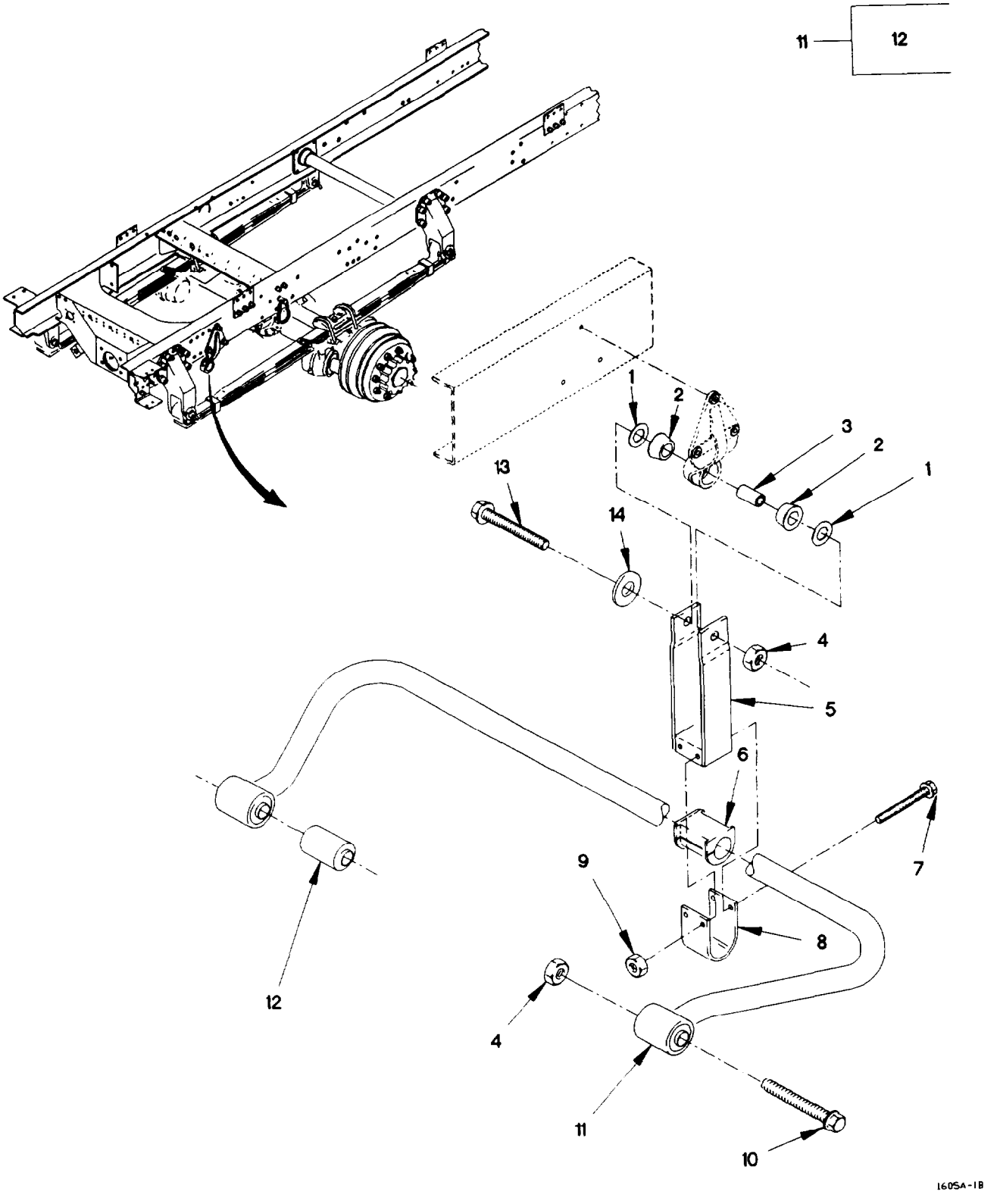

Figure 179. Rear Stabilizer Bar

(1) ITEM NO	(2) SMR CODE	(3) FSCM	(4) PART NUMBER	(5) DESCRIPTION AND USABLE ON CODE (UOC)	(6) QTY
				GROUP 1605: TORQUE, RADIUS, AND STABLIZER BAR	
				FIG. 179 REAR STABILIZER BAR	
1	PAOZZ	19207	12419029	WASHER, FLAT M35	4
2	PAOZZ	81860	25951-1	MOUNT, RESILIENT	4
3	PAOZZ	19207	12419026	BUSHING, SLEEVE	2
4	PAOZZ	19207	12414308-027	NUT, SELF-LOCKING, EX M20 X 1.5	4
5	PAOZZ	19207	12419032	BRACKET, DOUBLE ANGL	2
6	PAOZZ	81860	25952-1	MOUNT, RESILIENT	2
7	PAOZZ	19207	12414307-088	SCREW, CAP, HEXAGON H M12X1.5X100	4
8	PAOZZ	19207	12378772	BRACKET, DOUBLE ANGL	2
9	PAOZZ	19207	12414308-021	NUT, SELF-LOCKING, EX M12 X 1.5	4
10	PAOZZ	19207	12414551-126	SCREW, CAP, HEXAGON H M20 X 1.5 X 120	2
11	PAOZZ	19207	12417652	BAR, STABILIZER	1
12	PAOZZ	19207	12378806	.BUSHING, STABILIZER	2
13	PAOZZ	19207	12414551-124	BOLT, MACHINE M20 X 1.5 X 110	2
14	PAOZZ	19207	12417963-014	WASHER, FLAT	2
				END OF FIGURE	

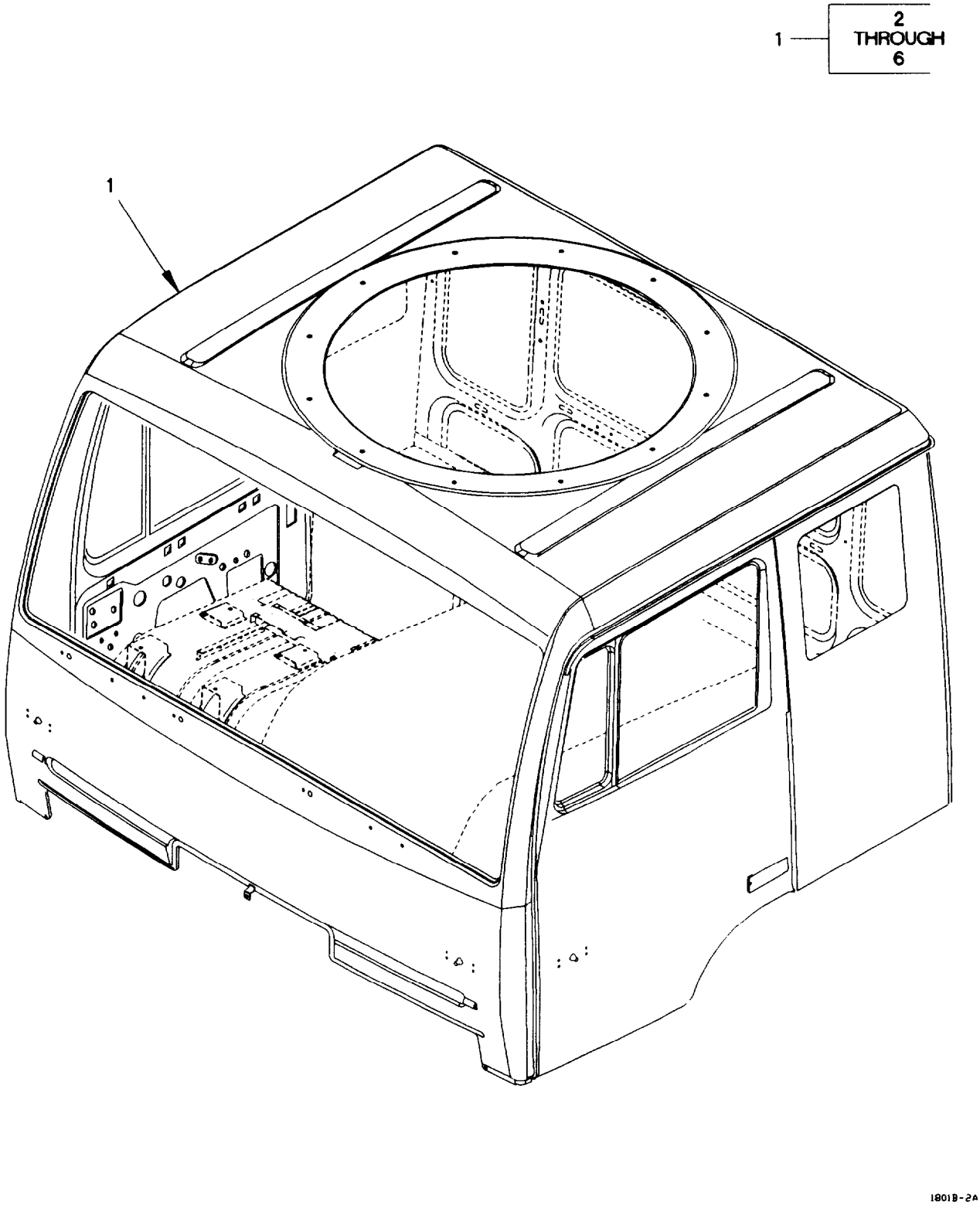

Figure 180. Standard Cab Assembly, Doors, and Hinges (Sheet 1 of 2)

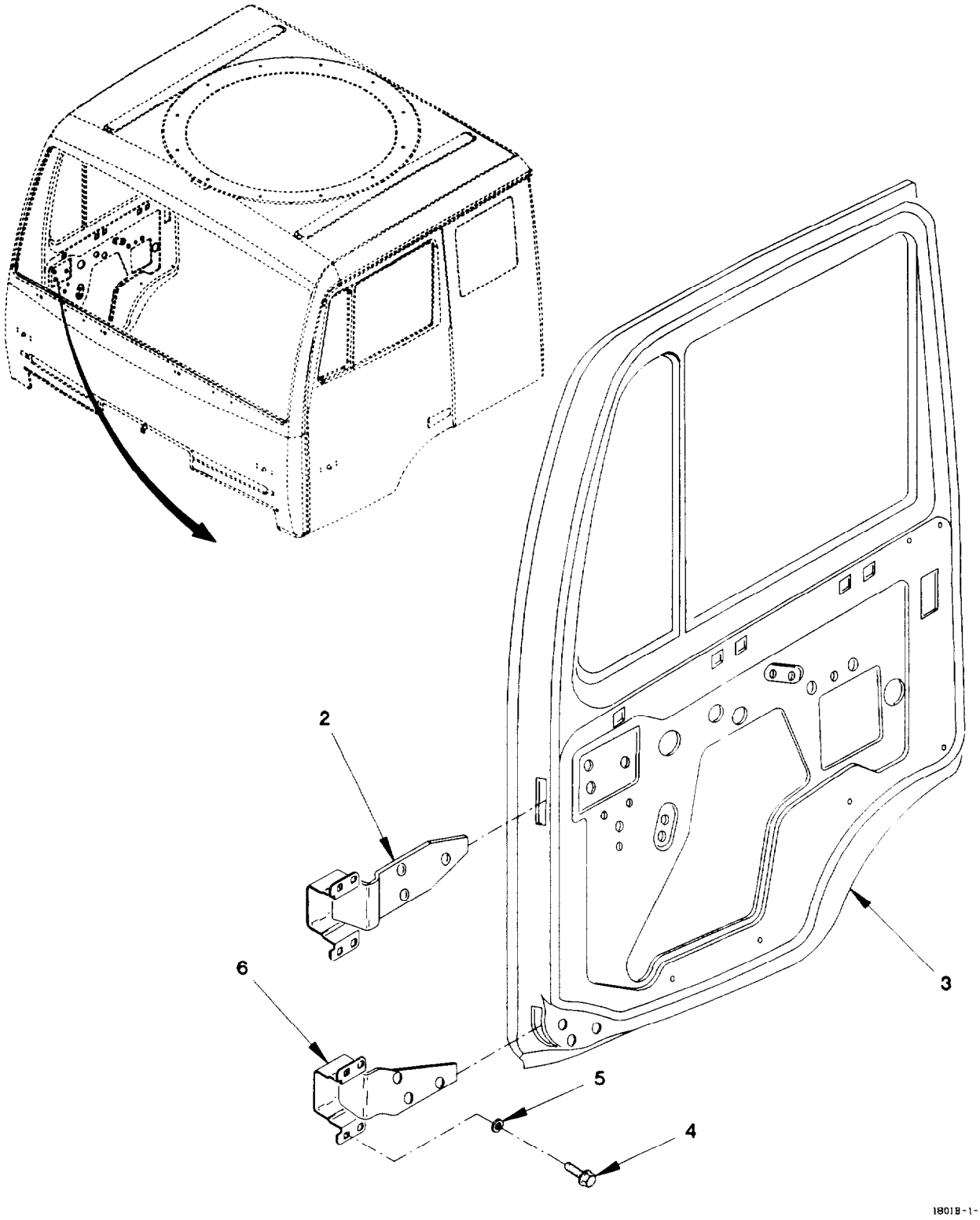

Figure 180. Standard Cab Assembly, Doors, and Hinges (Sheet 2 of 2)

(1) ITEM NO	(2) SMR CODE	(3) FSCM	(4) PART NUMBER	(5) DESCRIPTION AND USABLE ON CODE (UOC)	(6) QTY
				GROUP 1801: BODY, CAB, HOOD AND HULL ASSEMBLIES	
				FIG. 180 STANDARD CAB ASSEMBLY, DOORS AND HINGES	
1	PBFFH	0FW39	12414744	CAB ASSEMBLY UOC: LAA, LAB, LAD, LWB, LWD,	1
2	PAOZZ	0FW39	12415320	.HINGE, DOOR VEHICULA UOC: LAA, LAB, LAD, LWB, LWD,	2
3	PAOZZ	0FW39	12414915	.DOOR, VEHICULAR RIGHT SIDE UOC: LAA, LAB, LAD, LWB, LWD,	1
3	PAOZZ	0FW39	12414916	.DOOR, VEHICULAR LEFT SIDE UOC: LAA, LAB, LAD, LWB, LWD,	1
4	PAOZZ	15526	933-M8X20	.SCREW, CAP, HEXAGON H M8 X 1.25 X 20. UOC: LAA, LAB, LAD, LWB, LWD,	32
5	PAOZZ	0FW39	12414582-004	.SPACER, SLEEVE UOC: LAA, LAB, LAD, LWB, LWD,	32
6	PAOZZ	0FW39	12415321	.HINGE, DOOR VEHICULA LOWER RIGHT UOC: LAA, LAB, LAD, LWB, LWD,	1
6	PAOZZ	0FW39	12415322	.HINGE, DOOR VEHICULA LOWER LEFT UOC: LAA, LAB, LAD, LWB, LWD,	1
				END OF FIGURE	

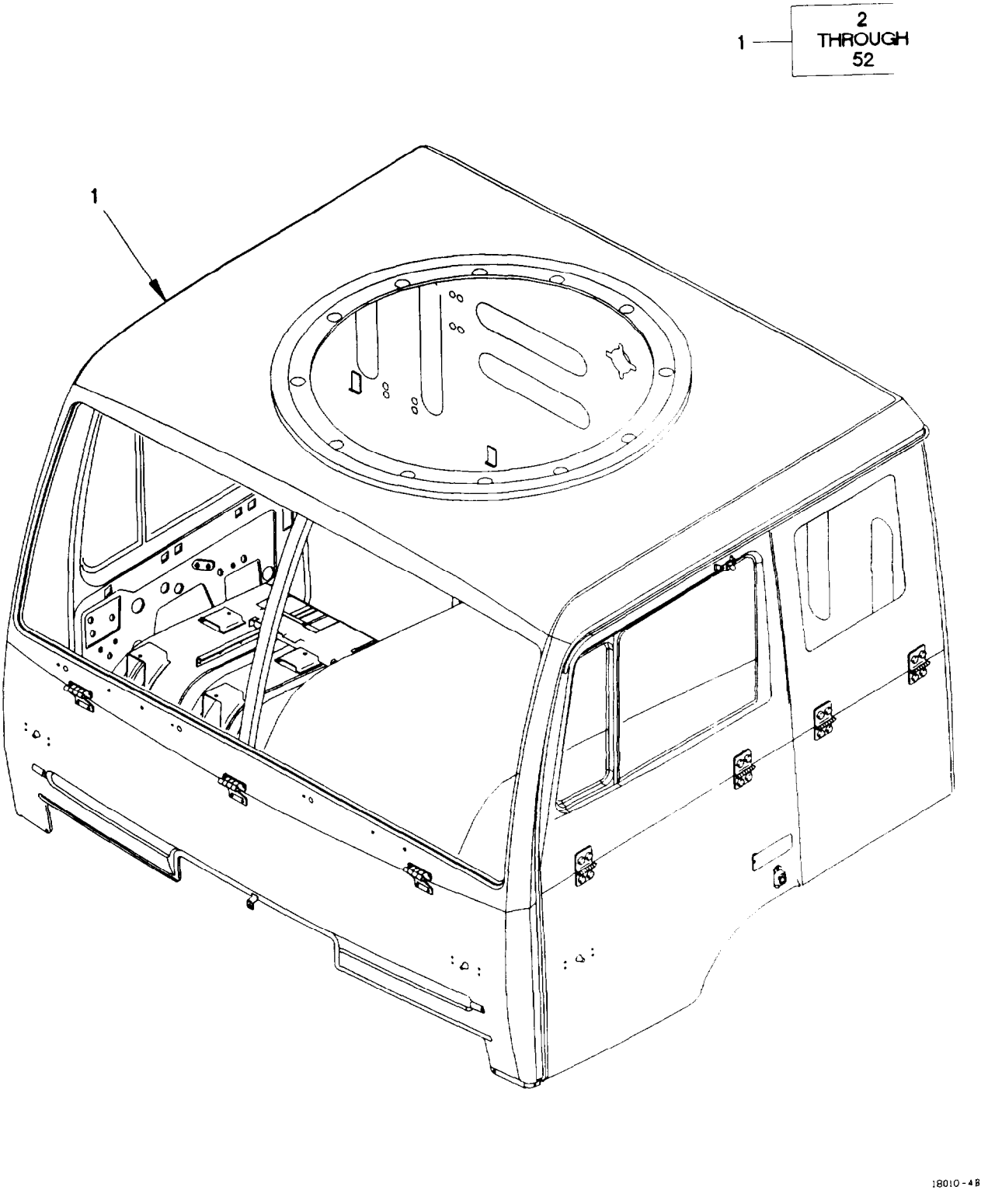

Figure 181. Air Drop Cab Assembly, Doors, and Hinges (Sheet 1 of 5)

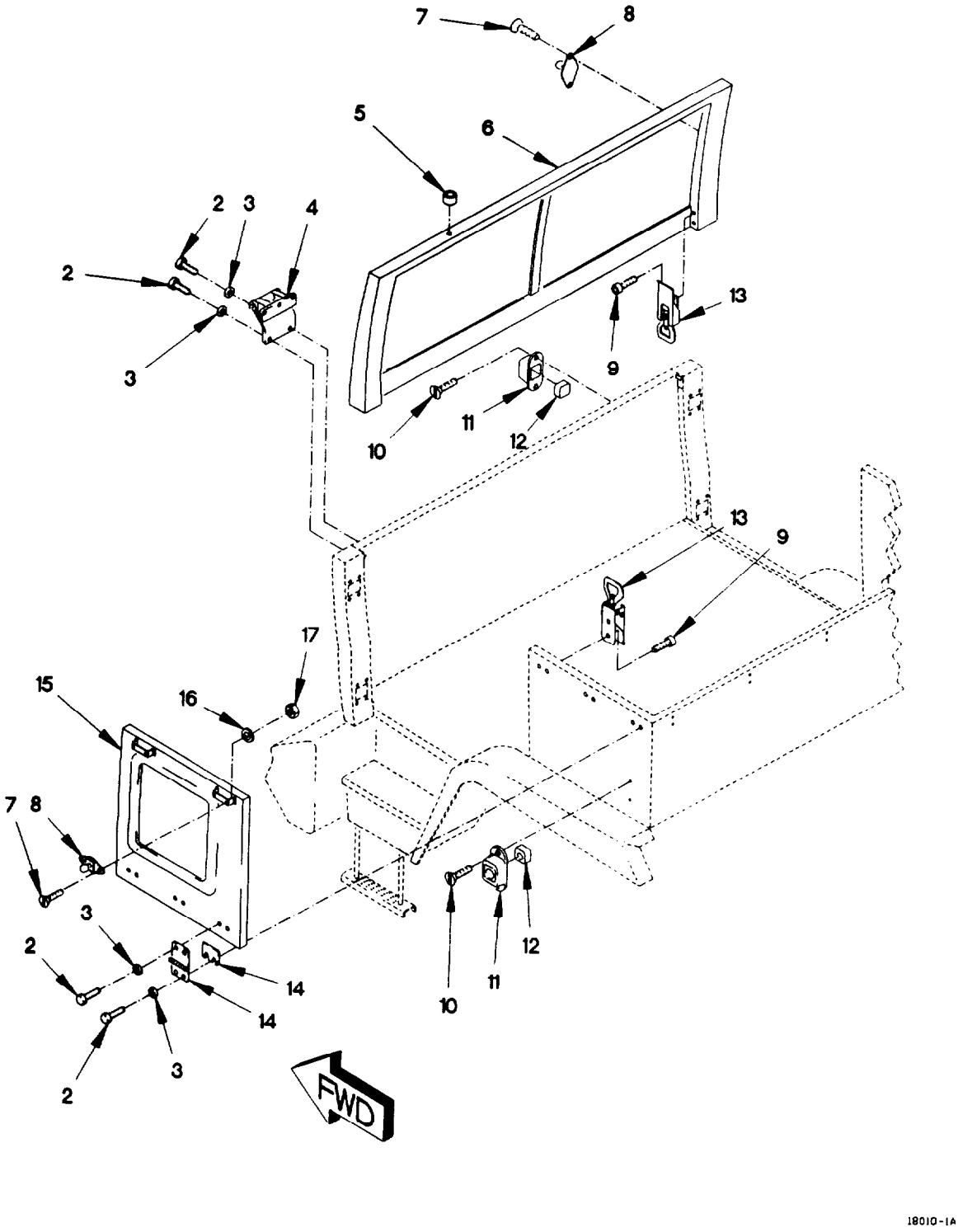

Figure 181. Air Drop Cab Assembly, Doors, and Hinges (Sheet 2 of 5)

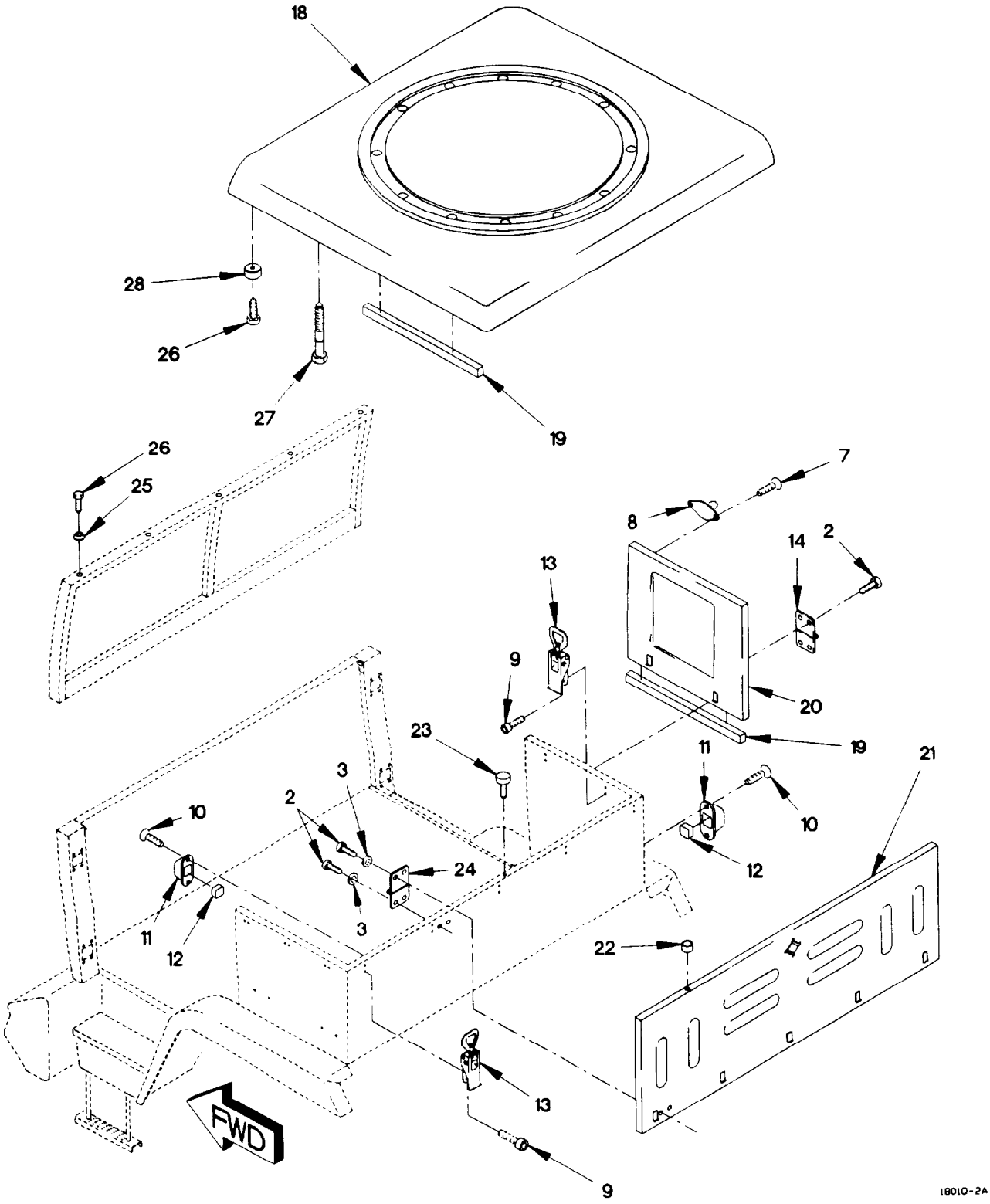

Figure 181. Air Drop Cab Assembly, Doors, and Hinges (Sheet 3 of 5)

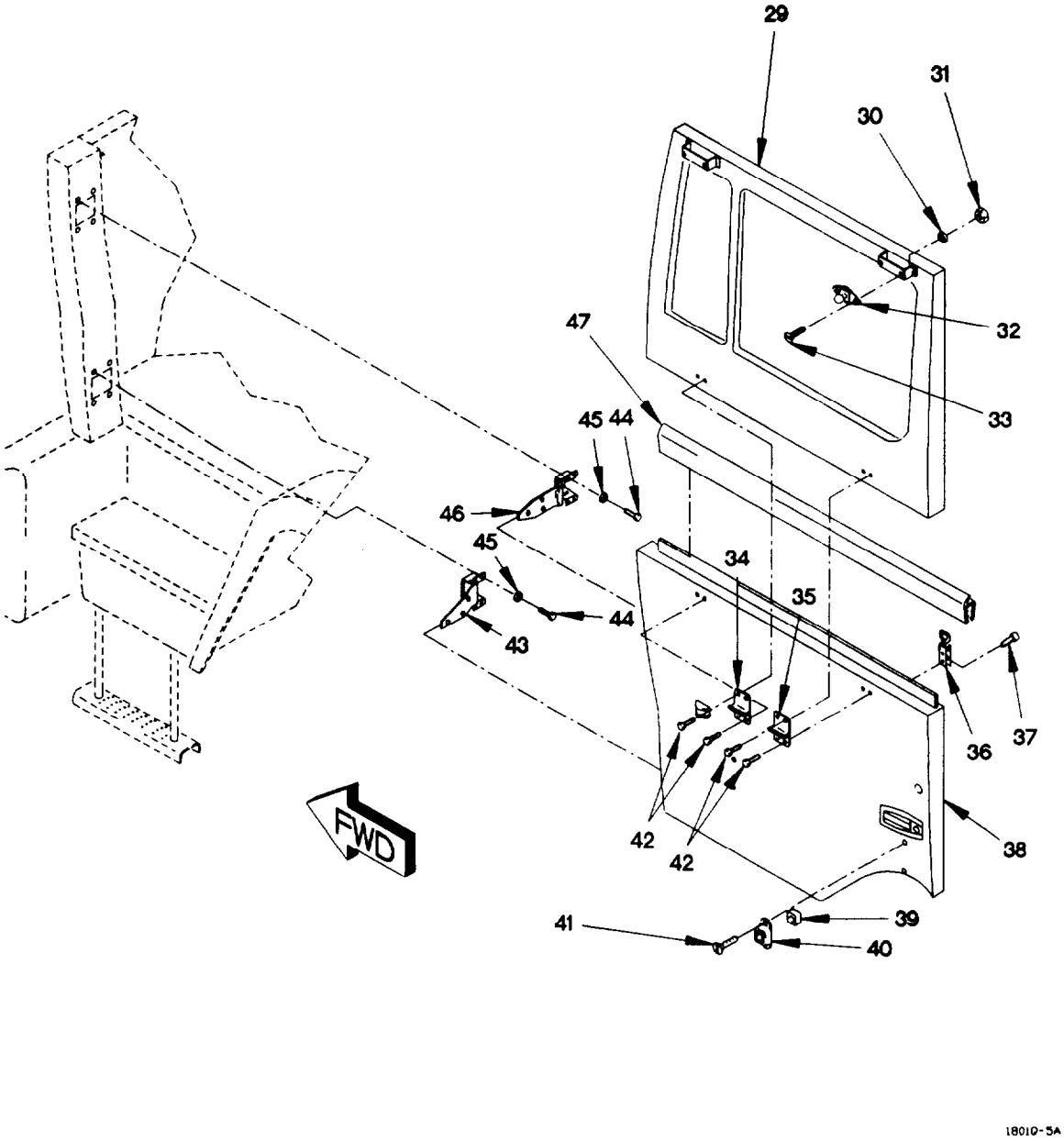

Figure 181. Air Drop Cab Assembly, Doors, and Hinges (Sheet 4 of 5)

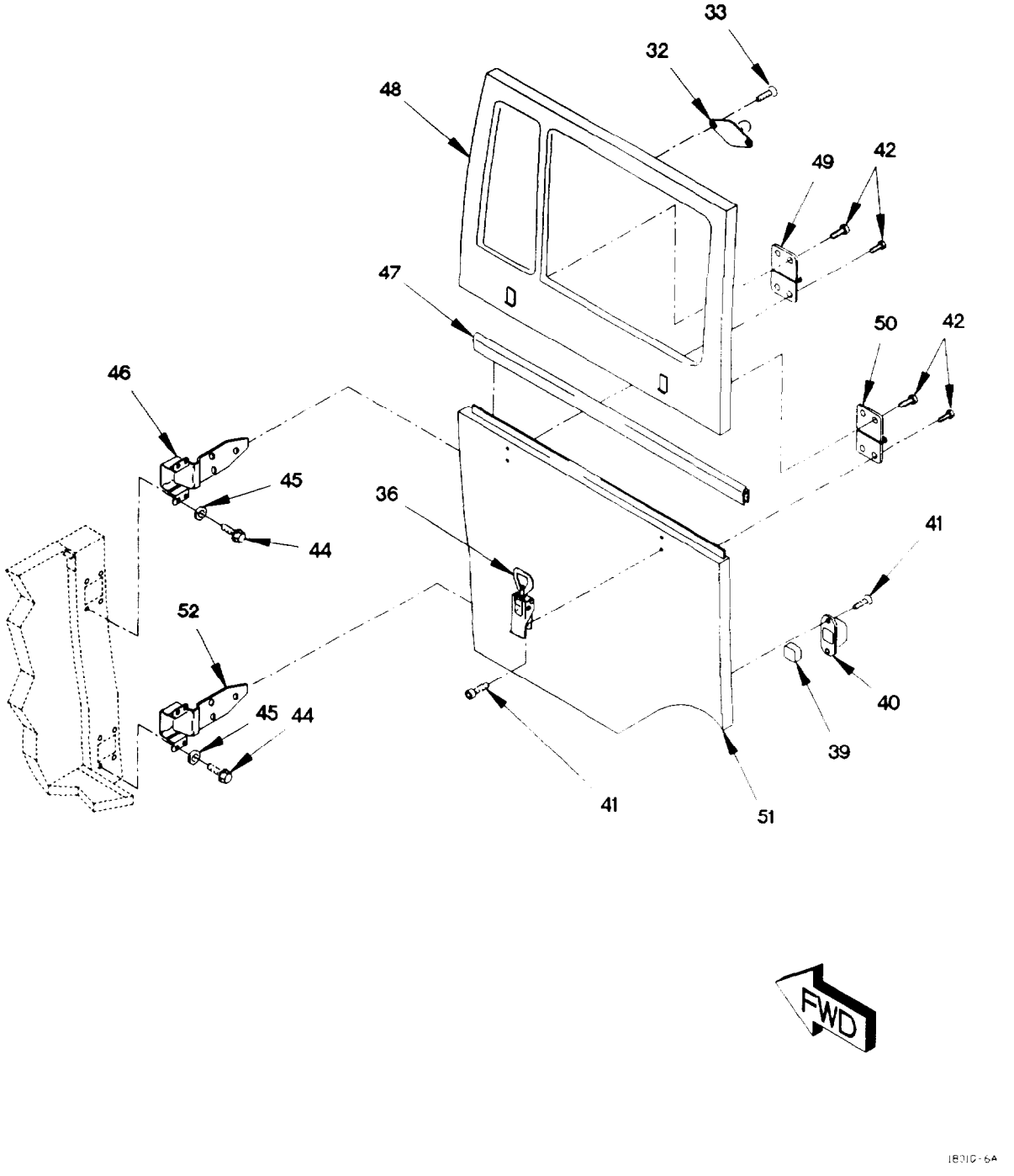

Figure 181. Air Drop Cab Assembly, Doors, and Hinges (Sheet 5 of 5)

(1) ITEM NO	(2) SMR CODE	(3) FSCM	(4) PART NUMBER	(5) DESCRIPTION AND USABLE ON CODE (UOC)	(6) QTY
				GROUP 1801: BODY, CAB, HOOD, AND HULL ASSEMBLIES	
				FIG. 181 AIR DROP CAB ASSEMBLY, DOORS, AND HINGES	
1	PBFFH	0FW39	12414944	CAB, BODY, LAPES UOC: LAC, LWC,	1
2	PAOZZ	81495	071 408 32	.BOLT, MACHINE M8 X 1.25 X 25 UOC: LAC, LWC,	59
3	PAOZZ	0FW39	12414582-004	.SPACER, SLEEVE UOC: LAC, LWC,	24
4	PAOZZ	0FW39	12415308	.HINGE, DOOR VEHICULA UOC: LAC, LWC,	3
5	PAOZZ	19207	12421264-001	.SPACER, SLEEVE UOC: LAC, LWC,	18
6	PAFZZ	19207	12415050	.FRAME, WINDOW, VEHICU UOC: LAC, LWC,	1
7	PAOZZ	19207	12417959-069	.SCREW, MACHINE M6 X 116 UOC: LAC, LWC,	20
8	PAOZZ	19207	12415301	.STUD, FRICTION CATCH UOC: LAC, LWC,	10
9	PAOZZ	19207	12414319-026	.SCREW, CAP, SOCKET HE M6 X 1 X 23 UOC: LAC, LWC,	34
10	PAOZZ	19207	12414319-024	.SCREW, CAP, SOCKET HE M6 X 1 X 16 UOC: LAC, LWC,	22
11	PAOZZ	0FW39	12415300	.HOUSING, MECHANICAL UOC: LAC, LWC,	9
12	PAOZZ	0FW39	12415302	.RECEPTACLE, FRICTION UOC: LAC, LWC,	10
13	PAOZZ	0FW39	TVS20772	.TENSION LOCK UOC: LAC, LWC,	19
14	PAOZZ	0FW39	12415305	.HINGE, DOOR VEHICULA UOC: LAC, LWC,	6
15	PAFZZ	19207	12415145	.CAB ASSEMBLY UPPER LEFT SIDEWALL UOC: LAC, LWC,	1
16	PAOZZ	19207	12417975-006	.SPACER, RING UOC: LAC, LWC,	24
17	PAOZZ	19207	12414474-010	.NUT, PLAIN, HEXAGON M6 X 1.0 UOC: LAC, LWC,	46
18	PAOZZ	0FW39	TVS15400	.PANEL, BODY, VEHICULA UOC: LAC, LWC,	1
19	MFOZZ	19207	12420489	.BLOCK SEAL MAKE FROM SEAL P/N: STN2.38X.5 (0VXY8) X 13MM UOC: LAC, LWC,	1
20	PAFZZ	19207	12415120	.DOOR, VEHICULAR UPPER RIGHT SIDEWALL UOC: LAC, LWC,	1

(1) ITEM NO	(2) SMR CODE	(3) FSCM	(4) PART NUMBER	(5) DESCRIPTION AND USABLE ON CODE (UOC)	(6) QTY
21	PAOZZ	19207	12415160	.PANEL, BODY, VEHICULA UOC: LAC, LWC,	1
22	PAOZZ	19207	12421264-002	.SPACER, PLATE UOC: LAC, LWC,	10
23	PAOZZ	0FW39	12415306	.BUMPER, NONMETALLIC UOC: LAC, LWC,	22
24	PAOZZ	0FW39	12415304	.HINGE, BUTT UOC: LAC, LWC,	5
25	PAOZZ	0FW39	12415314	.CONE, CENTERING, BRAK UOC: LAC, LWC,	18
26	PAOZZ	19207	12414475-068	.SCREW, CAP, SOCKET HE M6 X 1 X 16 UOC: LAC, LWC,	36
27	PAOZZ	19207	12421366	.SCREW ASSEMBLY, PANE UOC: LAC, LWC,	30
28	PAOZZ	0FW39	12415313	.CONE, CENTERING UOC: LAC, LWC,	18
29	PAFZZ	19207	12415265	.DOOR, VEHICULAR UOC: LAC, LWC,	1
30	PAOZZ	19207	12417975-006	.SPACER, RING UOC: LAC, LWC,	4
31	PAOZZ	19207	12414474-010	.NUT, PLAIN, HEXAGON M6 X 1.0 UOC: LAC, LWC,	4
32	PAOZZ	19207	12415301	.STUD, FRICTION CATCH UOC: LAC, LWC,	2
33	PAOZZ	19207	12417959-069	.SCREW, MACHINE M6 X 116 UOC: LAC, LWC,	4
34	PAOZZ	0FW39	12415312	.HINGE, DOOR VEHICULA UOC: LAC, LWC,	1
35	PAOZZ	0FW39	T12415311	.HINGE, BUTT UOC: LAC, LWC,	1
36	PAOZZ	0FW39	TVS20772	.TENSION LOCK UOC: LAC, LWC,	4
37	PAOZZ	19207	12414319-026	.SCREW, CAP, SOCKET HE M6 X 1 X 23 UOC: LAC, LWC,	2
38	PAOZZ	19207	12415210	.DOOR, VEHICULAR UOC: LAC, LWC,	1
39	PAOZZ	0FW39	12415302	.RECEPTACLE, FRICTION UOC: LAC, LWC,	2
40	PAOZZ	0FW39	12415300	.HOUSING, MECHANICAL UOC: LAC, LWC,	3
41	PAOZZ	19207	12414319-024	.SCREW, CAP, SOCKET HE M6 X 1 X 16 UOC: LAC, LWC,	6
42	PAOZZ	81495	071 408 32	.BOLT, MACHINE M8 X 1.25 X 25 UOC: LAC, LWC,	16
43	PAOZZ	0FW39	12415322	.HINGE, DOOR VEHICULA LOWER LEFT UOC: LAC, LWC,	1
44	PAOZZ	15526	933-M8X20	.SCREW, CAP, HEXAGON H M8 X 1.25 X 20 UOC: LAC, LWC,	32

(1) ITEM NO	(2) SMR CODE	(3) FSCM	(4) PART NUMBER	(5) DESCRIPTION AND USABLE ON CODE (UOC)	(6) QTY
45	PAOZZ	0FW39	12414582-004	.SPACER, SLEEVE UOC: LAC, LWC,	8
46	PAOZZ	0FW39	12415320	.HINGE, DOOR VEHICULA UOC: LAC, LWC,	2
47	PAOZZ	0FW39	12415307	.BUMPER, NONMETALLIC UOC: LAC, LWC,	1
48	PAFZZ	19207	12415240	.PANEL, BODY, VEHICULA UOC: LAC, LWC,	1
49	PAOZZ	0FW39	T12415310	.HINGE, BUTT UOC: LAC, LWC,	1
50	PAOZZ	0FW39	12415309	.HINGE, DOOR VEHICULA UOC: LAC, LWC,	1
51	PAOZZ	19207	12415180	.DOOR, VEHICULAR UOC: LAC, LWC,	1
52	PAOZZ	0FW39	12415321	.HINGE, DOOR VEHICULA LOWER RIGHT UOC: LAC, LWC,	1

END OF FIGURE

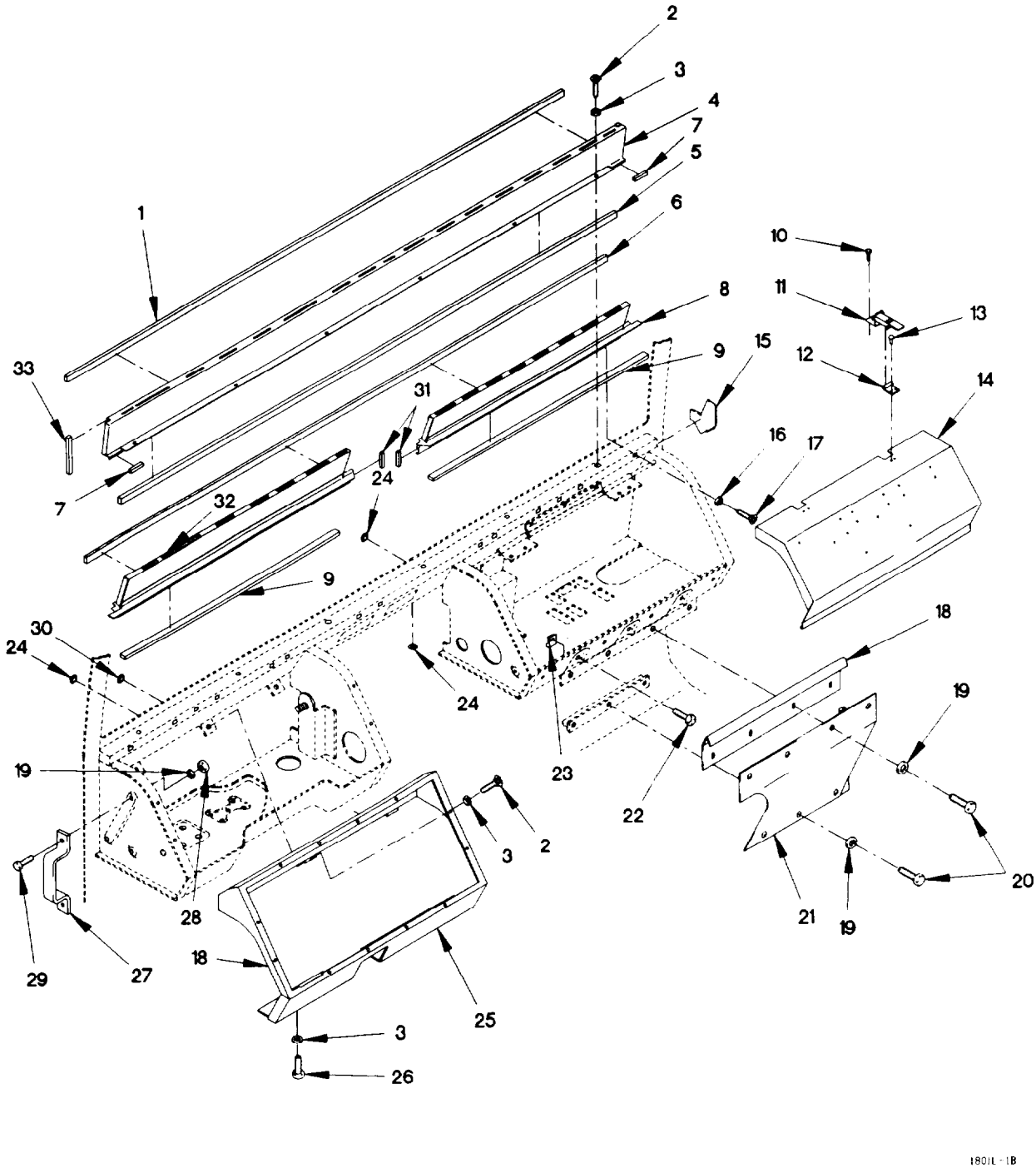

Figure 182. Dashboard

(1) ITEM NO	(2) SMR CODE	(3) FSCM	(4) PART NUMBER	(5) DESCRIPTION AND USABLE ON CODE (UOC)	(6) QTY
				GROUP 1801: BODY, CAB, HOOD, AND HULL ASSEMBLIES	
				FIG. 182 DASHBOARD	
1	MOOZZ	19207	12420420-3X2200	SEAL, URETHANE MAKE FROM SEAL P/N 12420420-003 (0FW39) X 2200 MM LONG	1
				UOC: LAA, LAB, LAD, LWB, LWD,	
2	PAOZZ	19207	12414310-046	SCREW, TAPPING M4.8 X 19	15
2	PAOZZ	19207	12414310-46	SCREW, TAPPING M4.8 X 19	6
				UOC: LAC, LWC,	
3	PAOZZ	D8286	DIN9021-5,3-100H V-C-B3B	WASHER, FLAT M5.3	9
4	PAOZZ	19207	12420495-004	SHIELD, HEATER DUCT	1
				UOC: LAA, LAB, LAD, LWB, LWD,	
5	MOOZZ	19207	12420420-1X2200	SEAL, URETHANE MAKE FROM SEAL P/N 12420420-001 (0FW39) X 2200 MM LONG	1
				UOC: LAA, LAB, LAD, LWB, LWD,	
6	MOOZZ	19207	12420420-2X2200	SEAL, URETHANE MAKE FROM SEAL P/N 12420420-002 (0FW39) X 2200 MM LONG	1
				UOC: LAC, LWC,	
7	MOOZZ	19207	12420420-2X85	SEAL, URETHANE MAKE FROM SEAL P/N 12420420-002 (0FW39) X 85MM LONG	2
				UOC: LAC, LWC,	
8	PAOZZ	19207	12420495-009	SHIELD, HEATER DUCT	1
				UOC: LAC, LWC,	
9	MOOZZ	0FW39	12420420-1X1900	SEAL, URETHANE MAKE FROM SEAL P/N 12410420-001 (0FW39) X 1900 MM LONG	2
				UOC: LAC, LWC,	
10	PAOZZ	19207	12414310-033	SCREW, TAPPING M4.2 X 9.5	4
11	PAOZZ	94222	91-99-111-12	LATCH, SAFETY, HOOK	2
12	PAOZZ	94222	K4-2338-12	LATCH, RIM	2
13	PAOZZ	07707	SD52BS	RIVET, BLIND	4
14	PAOZZ	19207	12420744	COVER, DISTRIBUTION	1
15	PAOZZ	19207	12421490	DUCT ASSEMBLY, AIR C	2
				UOC: LAC, LWC,	
16	PAOZZ	19207	12414473-008	WASHER, FLAT M3.7	8
				UOC: LAC, LWC,	
17	PAOZZ	19207	12414310-026	SCREW, TAPPING M3.5 X 19	8
				UOC: LAC, LWC,	
18	PAOZZ	19207	12420743	COVER, KICK PANEL EX	1
19	PAOZZ	19207	12417975-006	SPACER, RING 6.4MM ID X 18	11
20	PAOZZ	15526	933-M6X12	SCREW, CAP, HEXAGON H M6 X 1 X 12	7
21	PAOZZ	19207	12420494	HOUSING, PANEL, VEHIC	1

(1) ITEM NO	(2) SMR CODE	(3) FSCM	(4) PART NUMBER	(5) DESCRIPTION AND USABLE ON CODE (UOC)	(6) QTY
22	PAOZZ	19207	12414310-044	SCREW, TAPPING M8 X 13	3
23	PAOZZ	96906	MS90724-40	NUT, SHEET SPRING	3
24	PAOZZ	23540	411	INSULATOR, PLUG	2
24	PAOZZ	23540	411	INSULATOR, PLUG UOC: LAC, LWC,	4
25	PFOZZ	0FW39	12420958-007	BEZEL, INSTRUMENT MO	1
26	PAOZZ	0FW39	12414419-056	SCREW, CAP, HEXAGON H M5 X .8 X 10	2
27	PAOZZ	19220	2-M6252-X	HANDLE, BOW	2
28	PAOZZ	19207	12414474-010	NUT, PLAIN, HEXAGON M6 X 1.0	4
29	PAOZZ	15526	DIN933-M6X16-8.8 -A4C	SCREW, CAP, HEXAGON H M6 X 1 X 16	4
30	PAOZZ	23540	659	PLUG, PROTECTIVE, DUS	13
31	MOOZZ	19207	12420420-2X45	SEAL, URETHANE MAKE FROM SEAL P/N 12420420-002 (0FW39) X 2200 MM LONG UOC: LAC, LWC,	2
32	PAOZZ	19207	12420495-008	SHIELD, HEATER DUCT UOC: LAC, LWC,	1
33	MOOZZ	19207	12420420-3X172	SEAL, URETHANE MAKE FROM SEAL P/N 12420420-003 (0FW39) X 175 MM LONG UOC: LAA, LAB, LAD, LWB, LWD,	2

END OF FIGURE

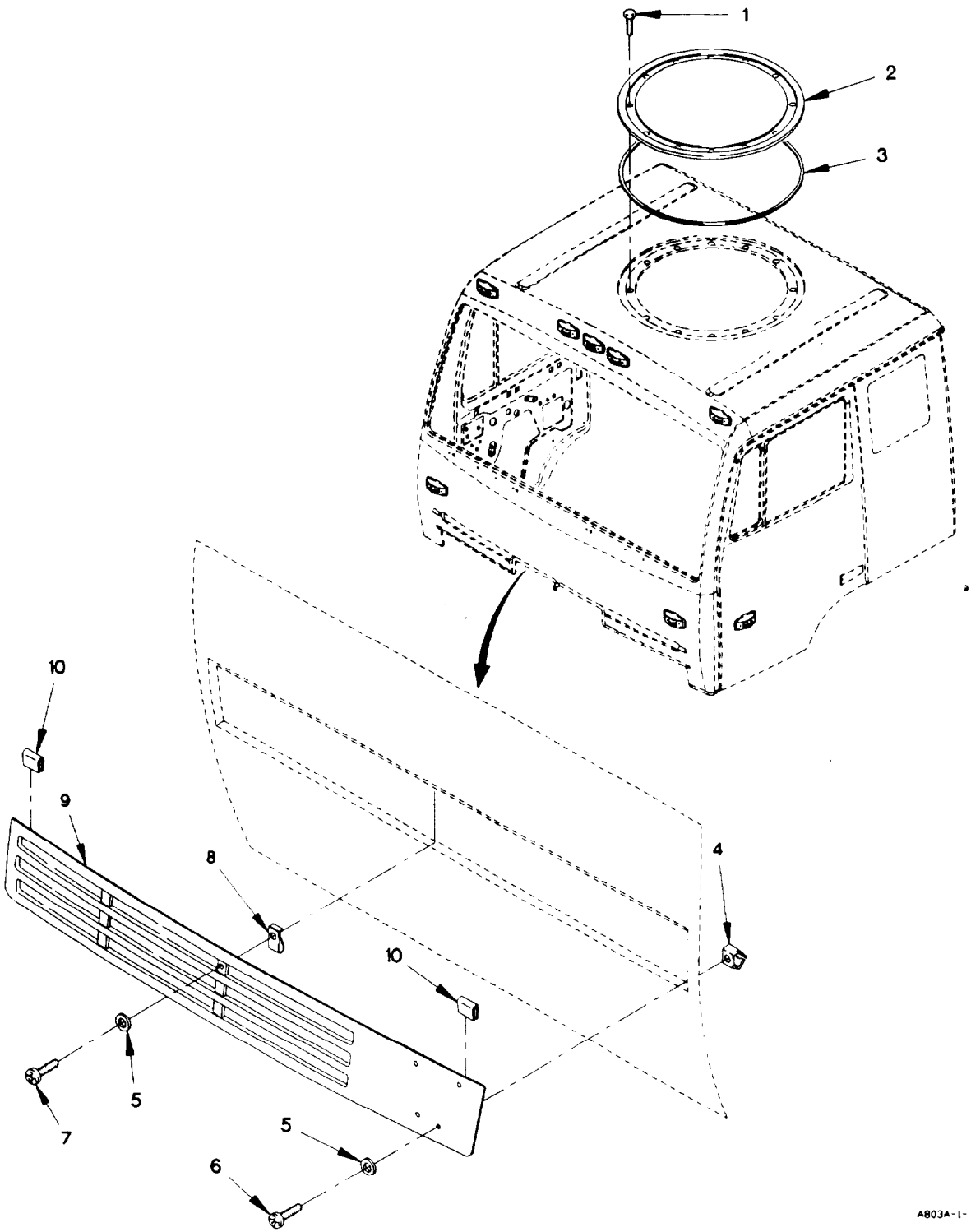

Figure 183. Cab Roof Hatch and Front Grille

(1) ITEM NO	(2) SMR CODE	(3) FSCM	(4) PART NUMBER	(5) DESCRIPTION AND USABLE ON CODE (UOC)		(6) QTY
				GROUP 1801: BODY, CAB, HOOD, AND HULL ASSEMBLIES		
				FIG. 183 ROOF HATCH AND FRONT GRILLE		
1	PAOZZ	80204	B1834B1205N	SCREW, CAP, SOCKET HE		12
2	PAOZZ	19207	12418323	HATCH, ROOF ASSEMBLY		1
3	PAOZZ	0FW39	12420421	RUBBER STRIP	V	
4	PAOZZ	19207	12419831-001	NUT, SHEET SPRING		2
5	PAOZZ	19200	12524631-1	WASHER, FLAT M6		3
6	PAOZZ	19207	12414310-048	SCREW, TAPPING M4.8 X 25		2
7	PAOZZ	56161	10503805	SCREW, CAP, HEXAGON H M6 X 1 X 20		1
8	PAOZZ	84256	ALS3-610-4.2	NUT, PLAIN, CLINCH M6X1.0 (GRIP RANGE 0.7 - 4.20)		1
9	PAOZZ	0FW39	12418315-001	GRILLE, RADIATOR, VEH		1
10	PAOZZ	0FW39	12417462	SEAL, NONMETALLIC SP		2
				END OF FIGURE		

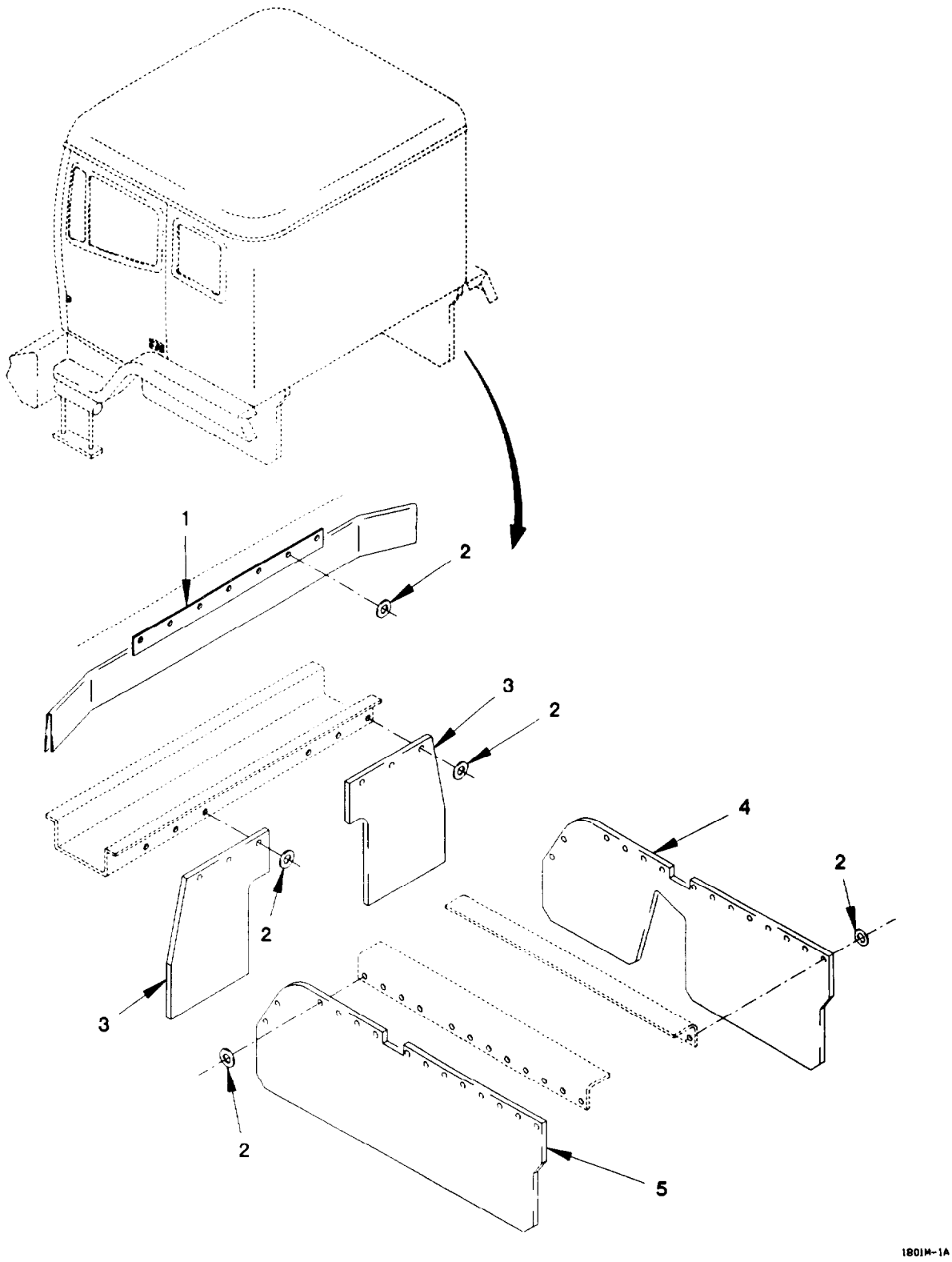

Figure 184. Engine Splash Guards

(1) ITEM NO	(2) SMR CODE	(3) FSCM	(4) PART NUMBER	(5) DESCRIPTION AND USABLE ON CODE (UOC)	(6) QTY
				GROUP 1801: BODY, CAB, HOOD, AND HULL ASSEMBLIES	
				FIG. 184 ENGINE SPLASH GUARDS	
1	PAOZZ	19207	12420296	BAFFLE, AIRFLOW, NONA	1
2	PAOZZ	19207	12417975-006	SPACER, RING	41
3	PAOZZ	19207	12417807-001	GUARD, SPLASH, VEHICU	2
4	PAOZZ	0FW39	12417805-001	GUARD, SPLASH, VEHICU	1
5	PAOZZ	0FW39	12417804-001	GUARD, SPLASH, VEHICU	1
				END OF FIGURE	

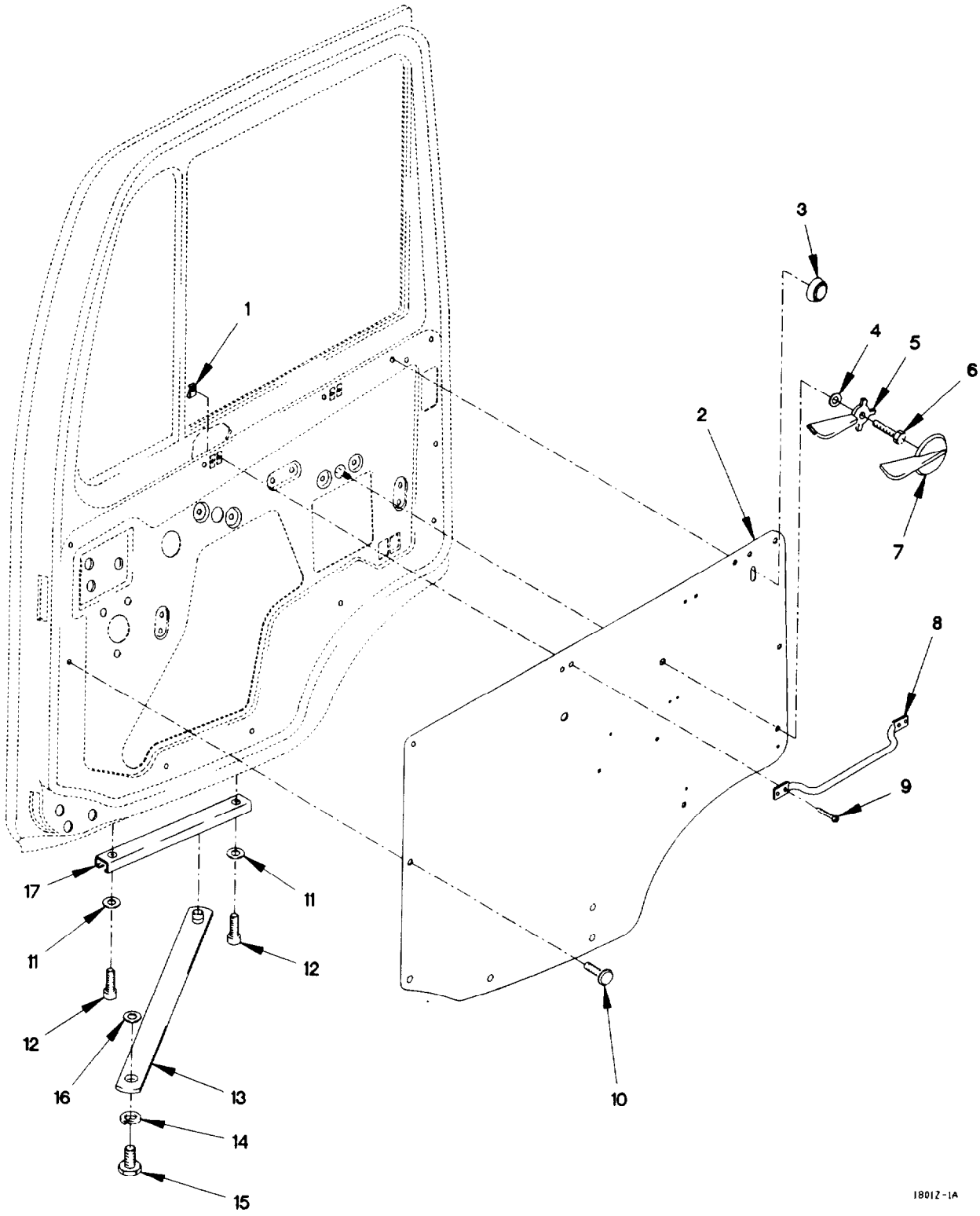

Figure 185. Cab Door Fittings (Sheet 1 of 4)

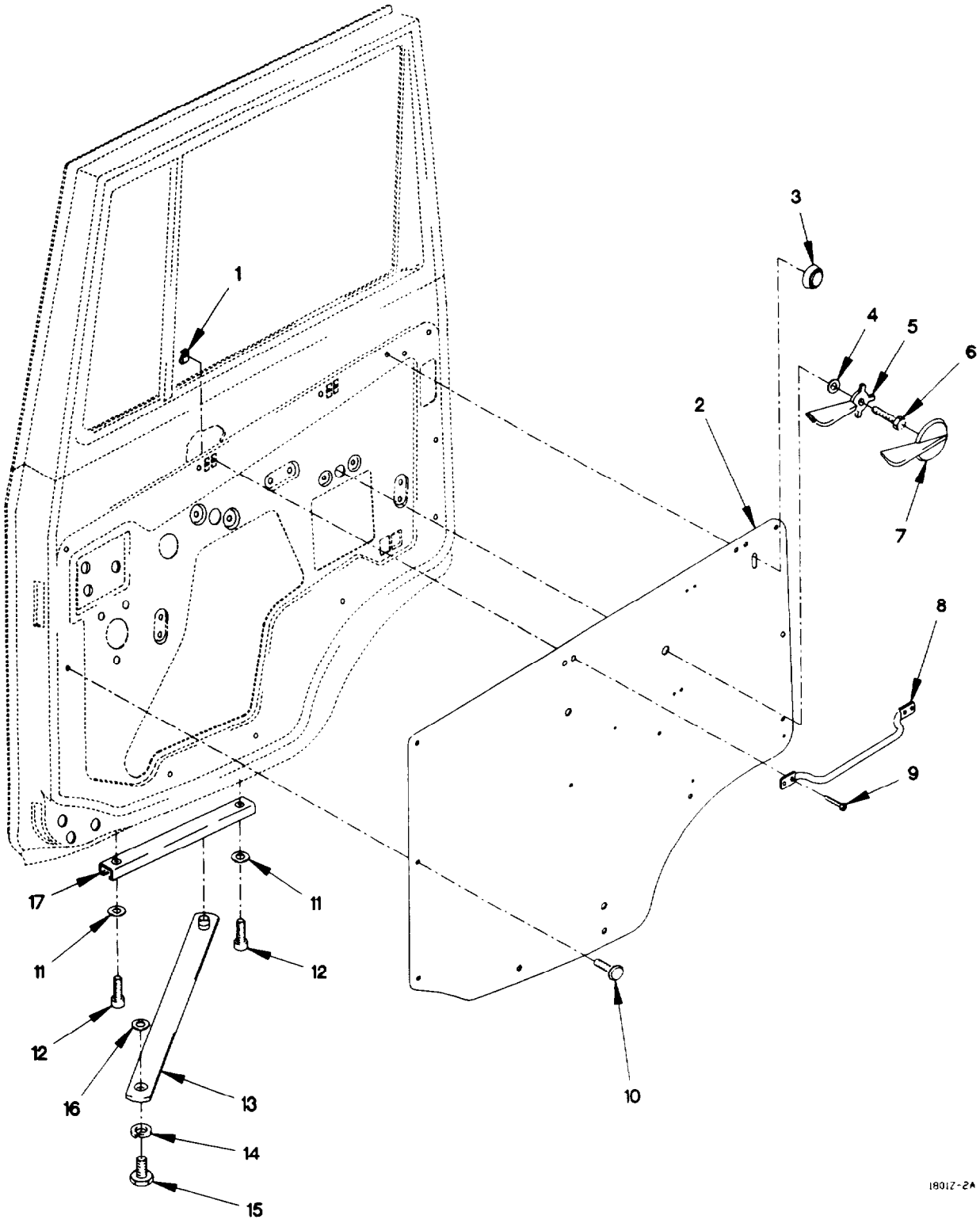

Figure 185. Cab Door Fittings (Sheet 2 of 4)

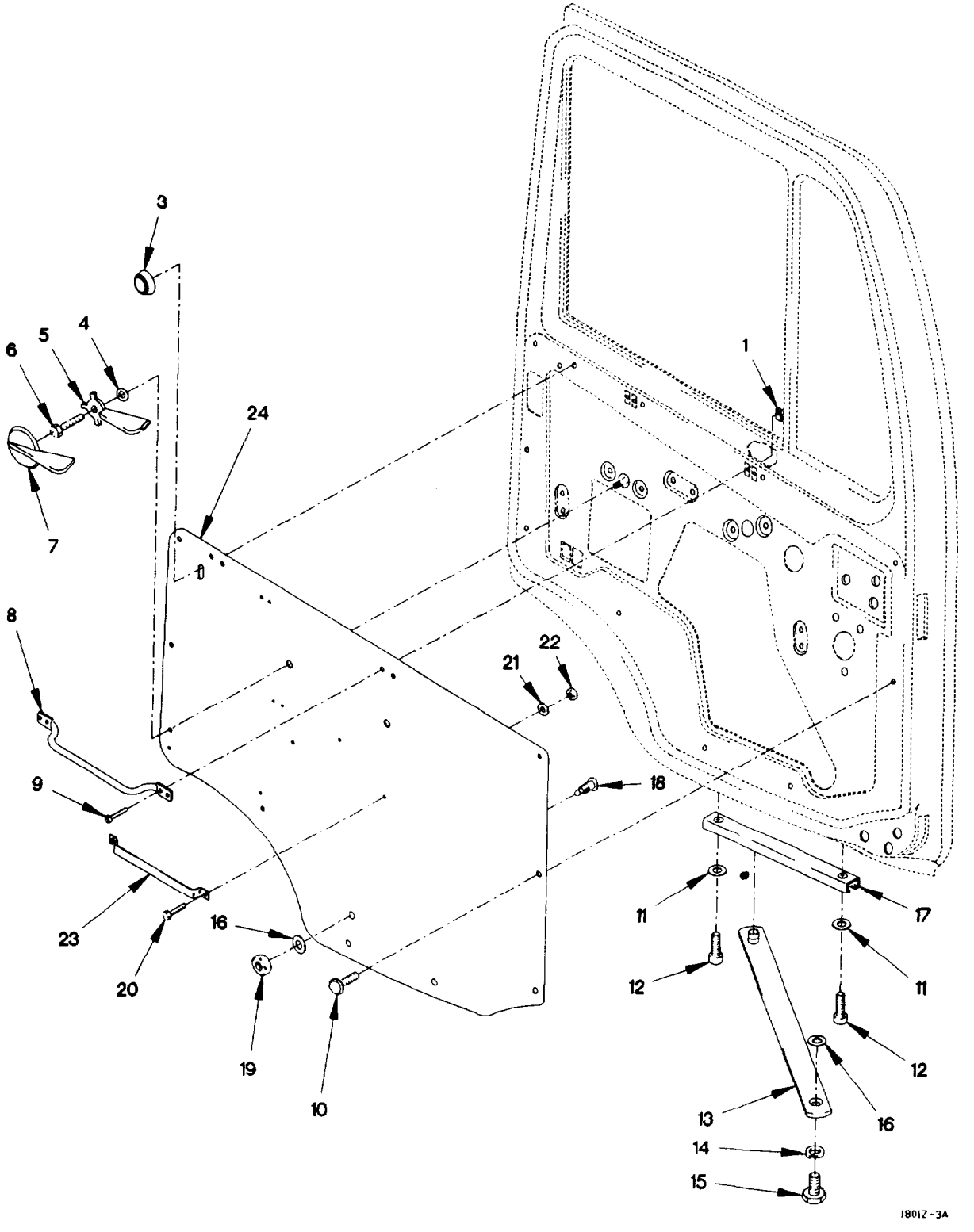

Figure 185. Cab Door Fittings (Sheet 3 of 4)

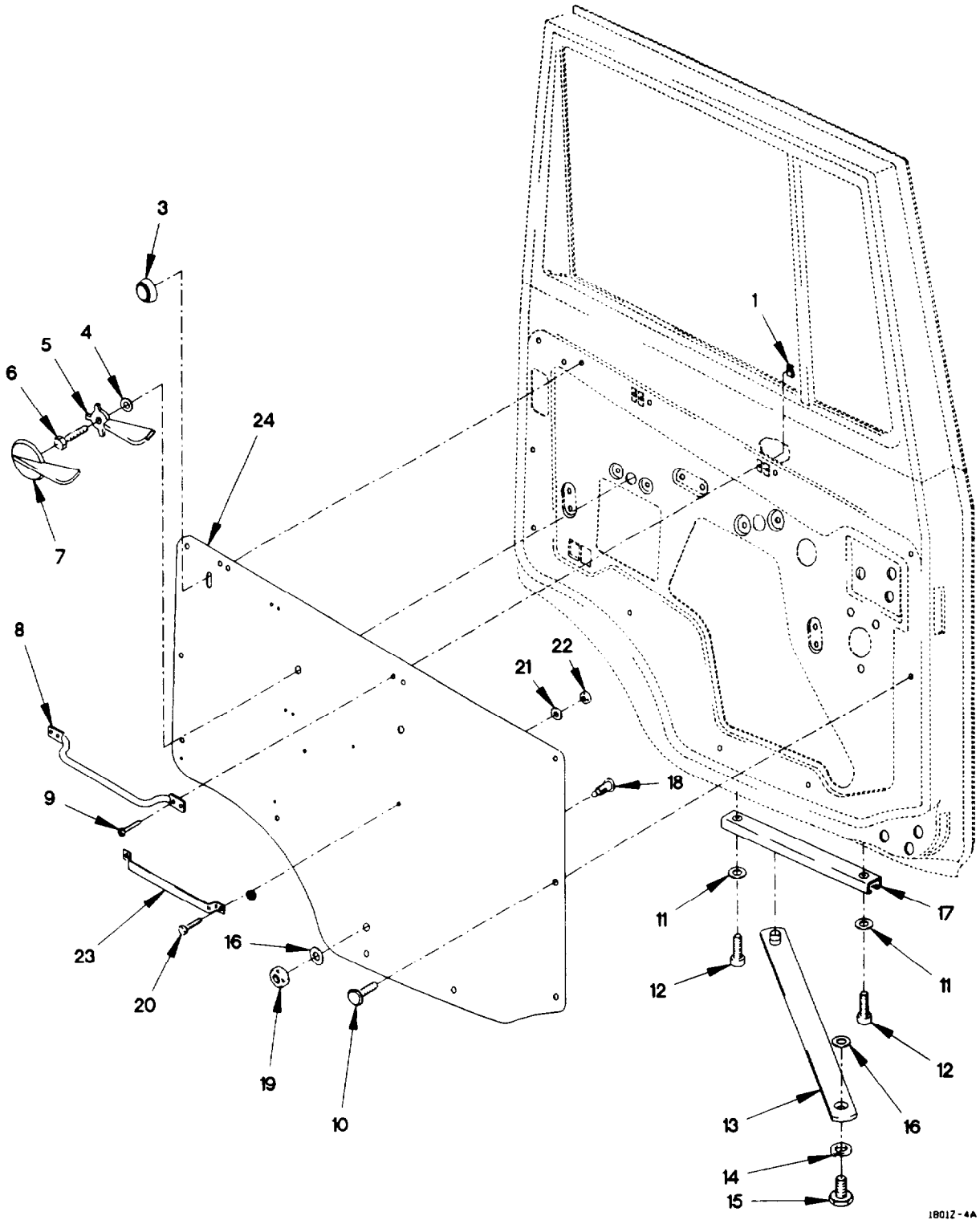

Figure 185. Cab Door Fittings (Sheet 4 of 4)

(1) ITEM NO	(2) SMR CODE	(3) FSCM	(4) PART NUMBER	(5) DESCRIPTION AND USABLE ON CODE (UOC)	(6) QTY
				GROUP 1801: BODY, CAB, HOOD, AND HULL ASSEMBLIES	
				FIG. 185 CAB DOOR FITTINGS	
1	PAOZZ	19207	12419831-001	NUT, SHEET SPRING	8
2	PAOZZ	0FW39	12420381-002	PANEL, INTERIOR, VEHI	1
3	PAOZZ	0FW39	12417473	KNOB	2
4	PAOZZ	19207	12417707	WASHER, FLAT M10	2
5	PAOZZ	0FW39	12417502	HANDLE, DOOR, VEHICUL	2
6	PAOZZ	15526	933-M6X12	SCREW, CAP, HEXAGON H M6 X 1 X 12	2
7	PAOZZ	0FW39	12418393	COVER, HANDLE, DOOR, V	2
8	PAOZZ	19207	12421454	HANDLE, BOW	2
9	PAOZZ	19207	12414310-048	SCREW, TAPPING M4.8 X 25	8
10	PAOZZ	0FW39	12418469	RIVET, COMPRESSION	20
11	PAOZZ	34914	990 3861	WASHER, FLAT M8.4	4
12	PAOZZ	19207	12414475-081	SCREW, CAP, SOCKET HE M8 X 1.25 16	4
13	PAOZZ	19207	12417470-003	CONNECTING LINK, RIG	2
14	PAOZZ	62445	110 7289	WASHER, LOCK M13	2
15	PAOZZ	19207	12417714	BOLT, SHOULDER M8 X 1.25 X 20.8	2
16	PAOZZ	19207	12417975-008	WASHER, FLAT M8.4	3
17	PAOZZ	0FW39	12417471-003	HOLDER, SPRING	2
18	PAOZZ	0FW39	12417494	PIN, SHOULDER, HEADED	1
19	PAOZZ	1FH08	DIN555M8	NUT, PLAIN, HEXAGON M8 X 1.25	1
20	PAOZZ	56161	10503657	SCREW, CAP, HEXAGON H M5 X .8 X 12	2
21	PAOZZ	D8286	DIN9021-5, 3-100H V-C-B3B	WASHER, FLAT M5.3	2
22	PAOZZ	19207	12414474-009	NUT, PLAIN, HEXAGON M5 X .8	2
23	PAOZZ	19207	12417815	BRACKET, DOUBLE ANGL	1
24	PAOZZ	19207	12420381-001	PANEL, INTERIOR, VEHI	1

END OF FIGURE

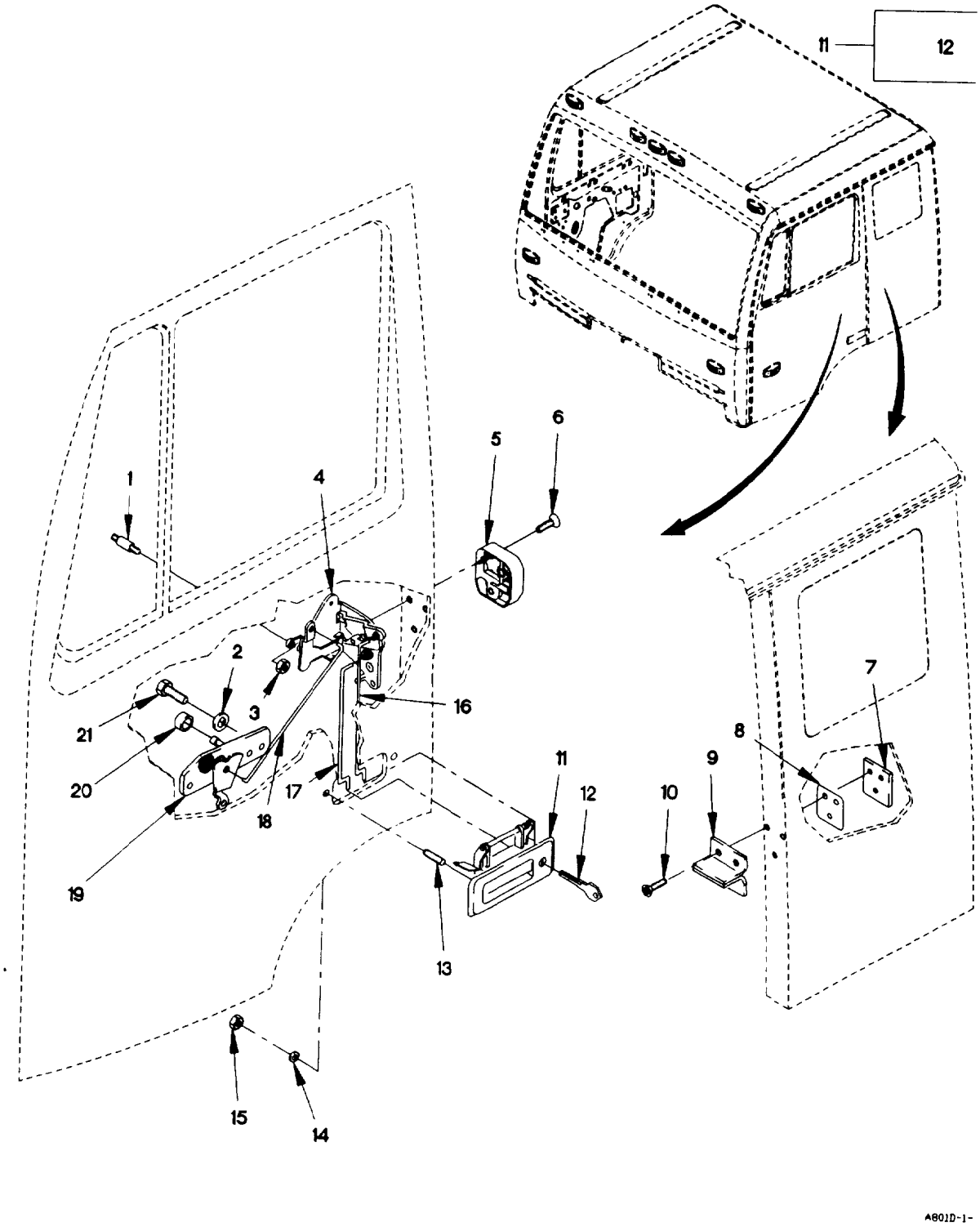

Figure 186. Door Locks, Handles, and Key
(Sheet 1 of 2)

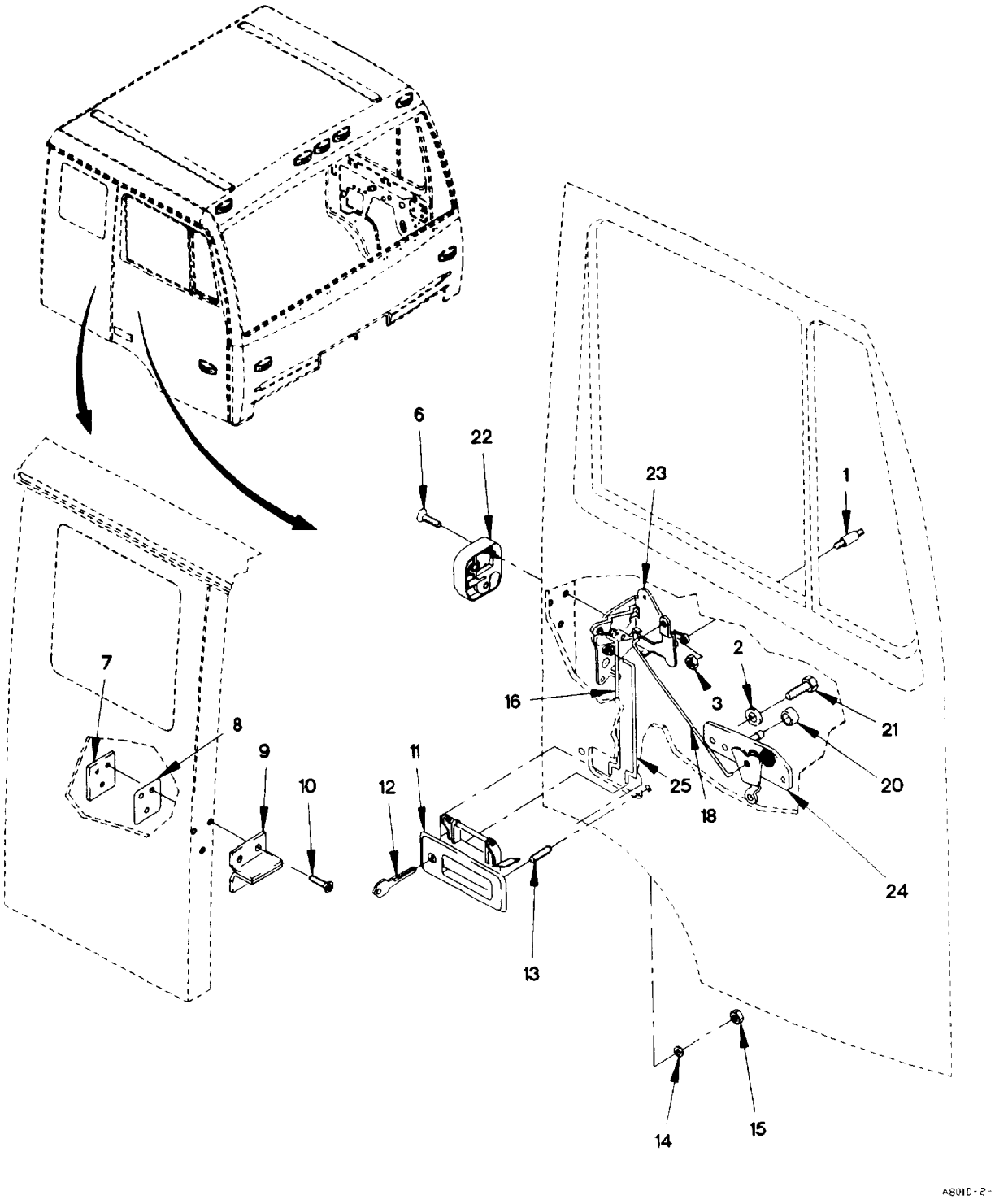

Figure 186. Door Locks, Handles, and Key
(Sheet 2 of 2)

(1) ITEM NO	(2) SMR CODE	(3) FSCM	(4) PART NUMBER	(5) DESCRIPTION AND USABLE ON CODE (UOC)	(6) QTY
				GROUP 1801: BODY, CAB, HOOD, AND HULL ASSEMBLIES	
				FIG. 186 DOOR LOCKS, HANDLES, AND KEY	
1	PAOZZ	19207	12417474	STUD, SHOULDERED	2
2	PAOZZ	D8286	DIN9021-5, 3-100H V-C-B3B	WASHER, FLAT M5.3	4
3	PAOZZ	19207	12414315-002	NUT, PLAIN, HEXAGON M4 X .7	2
4	PAOZZ	0FW39	12417478	LATCH, DOOR, VEHICULA	1
5	PAOZZ	0FW39	12417476	ACTUATOR, MECHANICAL	1
6	PAOZZ	19207	12417959-073	SCREW, MACHINE M6 X 30	6
7	PAOZZ	0FW39	12419899	PLATE, MOUNTING	2
8	PAOZZ	19207	12417480	SPACER, PLATE	2
9	PAOZZ	0FW39	12417479-001	STRIKE, CATCH	2
10	PAOZZ	19207	12417959-068	SCREW, MACHINE M6 X 12	6
11	PAOZZ	0FW39	12417493	HANDLE SET, VEHICULA SET INCLUDES RIGHT AND LEFT HANDLES	1
12	PAOZZ	0FW39	12417493-003	.KEY BLANK	1
13	PAOZZ	19207	12421284-089	SETSCREW M6 X 1 X 18	2
14	PAOZZ	19200	12524631-1	WASHER, FLAT M6	2
15	PAOZZ	19207	124144714-010	NUT, PLAIN, HEXAGON M6 X 1.0	2
16	PAOZZ	0FW39	12417723	CONNECTING LINK, RIG	2
17	PAOZZ	0FW39	12417722	CONNECTING LINK, RIG	1
18	PAOZZ	0FW39	12417724	CONNECTING LINK, RIG	2
19	PAOZZ	0FW39	12417482	ACTUATOR, MECHANICAL	1
20	PAOZZ	0FW39	12417725	SEAL, NONMETALLIC RO	2
21	PAOZZ	0FW39	12414419-056	SCREW, CAP, HEXAGON H M5 X .8 X 10	4
22	PAOZZ	0FW39	12417475	ACTUATOR, MECHANICAL	1
23	PAOZZ	0FW39	12417477	LATCH, DOOR, VEHICULA	1
24	PAOZZ	0FW39	12417481	ACTUATOR, MECHANICAL	1
25	PAOZZ	0FW39	12417721	CONNECTING LINK, RIG	1

END OF FIGURE

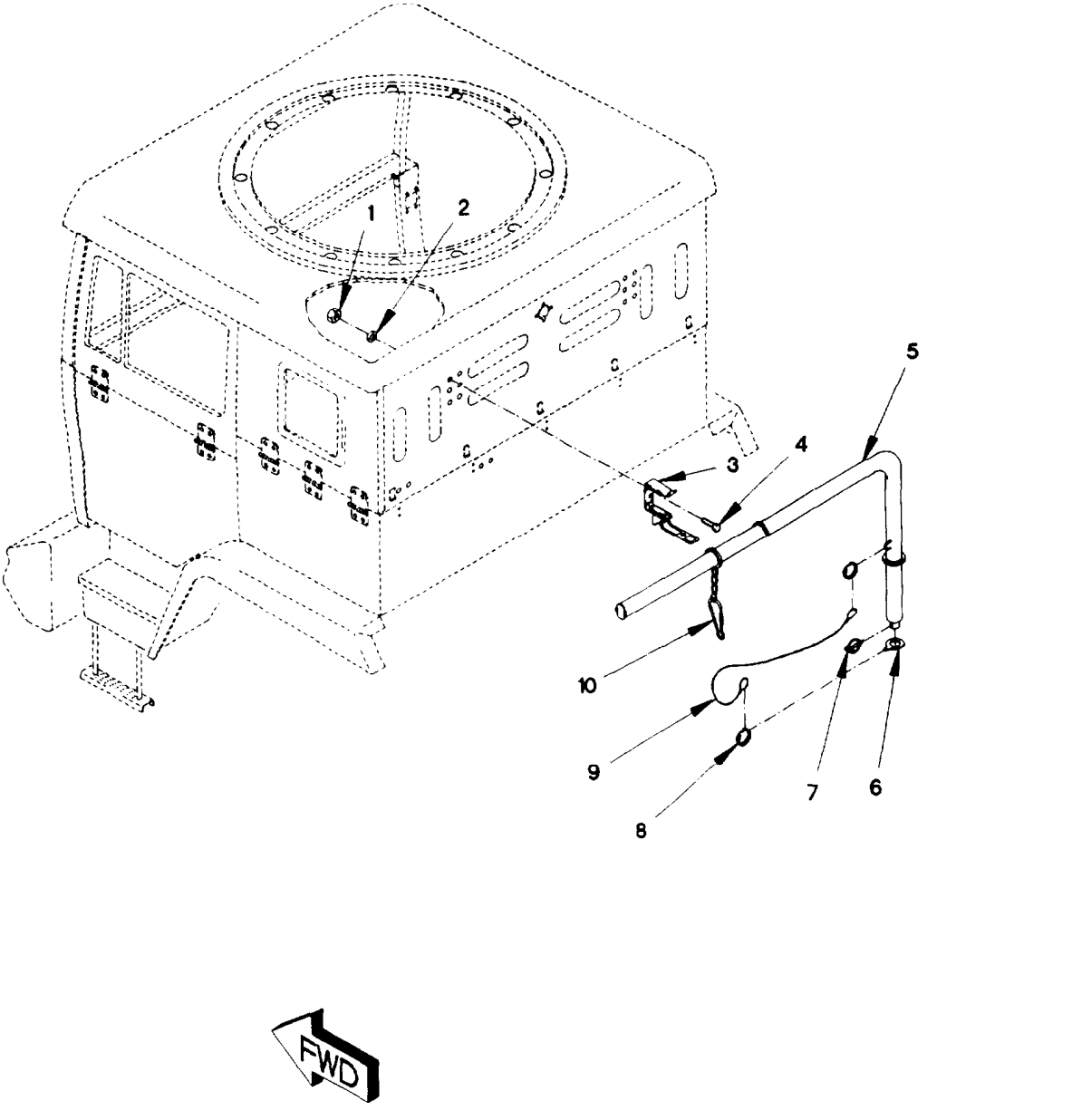

Figure 187. Air Drop Davit Boom Assembly

(1) ITEM NO	(2) SMR CODE	(3) FSCM	(4) PART NUMBER	(5) DESCRIPTION AND USABLE ON CODE (UOC)	(6) QTY
				GROUP 1801: BODY, CAB, HOOD, AND HULL ASSEMBLIES	
				FIG. 187 AIR DROP DAVIT BOOM ASSEMBLY	
1	PAOZZ	19207	12414474-009	NUT, PLAIN, HEXAGON M5 X .8 UOC: LAC, LWC,	4
2	PAOZZ	D8286	DIN9021-5, 3-100H V-C-B3B	WASHER, FLAT M5.3 UOC: LAC, LWC,	4
3	PAOZZ	19207	12420488	BRACKET, MOUNTING UOC: LAC, LWC,	3
4	PAOZZ	19207	12414419-058	SCREW, CAP, HEXAGON H M5 X .8 X 16 UOC: LAC, LWC,	12
5	PAOZZ	19207	12420472	BOOM, CRANE UOC: LAC, LWC,	1
6	PAOZZ	19207	12420485	WASHER, LOCK UOC: LAC, LWC,	1
7	PAOZZ	0FW39	12417930	PIN, QUICK RELEASE UOC: LAC, LWC,	1
8	PAOZZ	84256	19-8CD	RING, RETAINING UOC: LAC, LWC,	2
9	PAOZZ	84256	50996-8W	WIRE ROPE ASSEMBLY MAKE FROM WIRE P/N:M83420/4-005 (81349) X 16MM UOC: LAC, LWC,	2
10	PAOZZ	0FW39	12420486	SNAP HOOK UOC: LAC, LWC,	2
				END OF FIGURE	

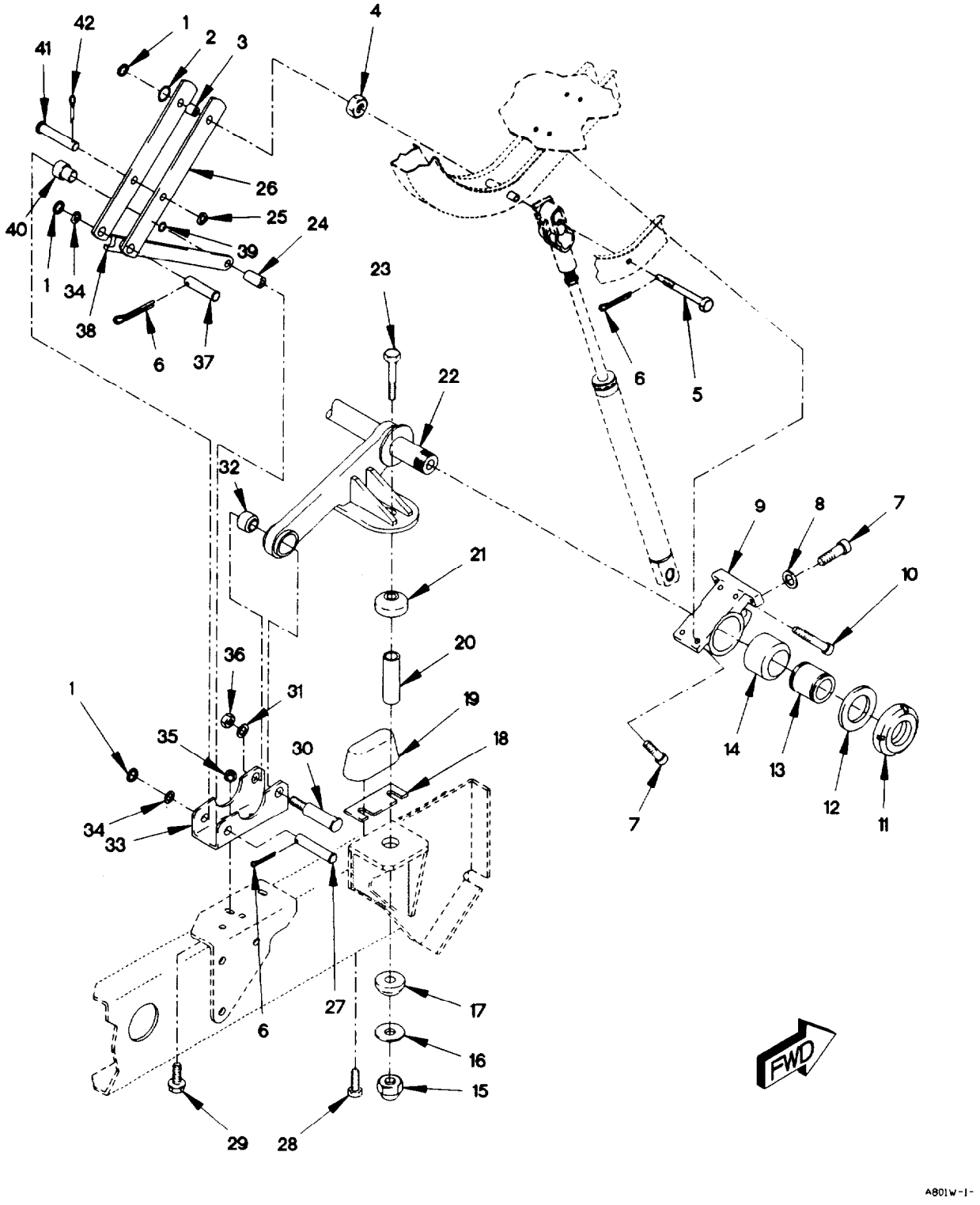

Figure 188. Front Cab Supports (Sheet 1 of 2)

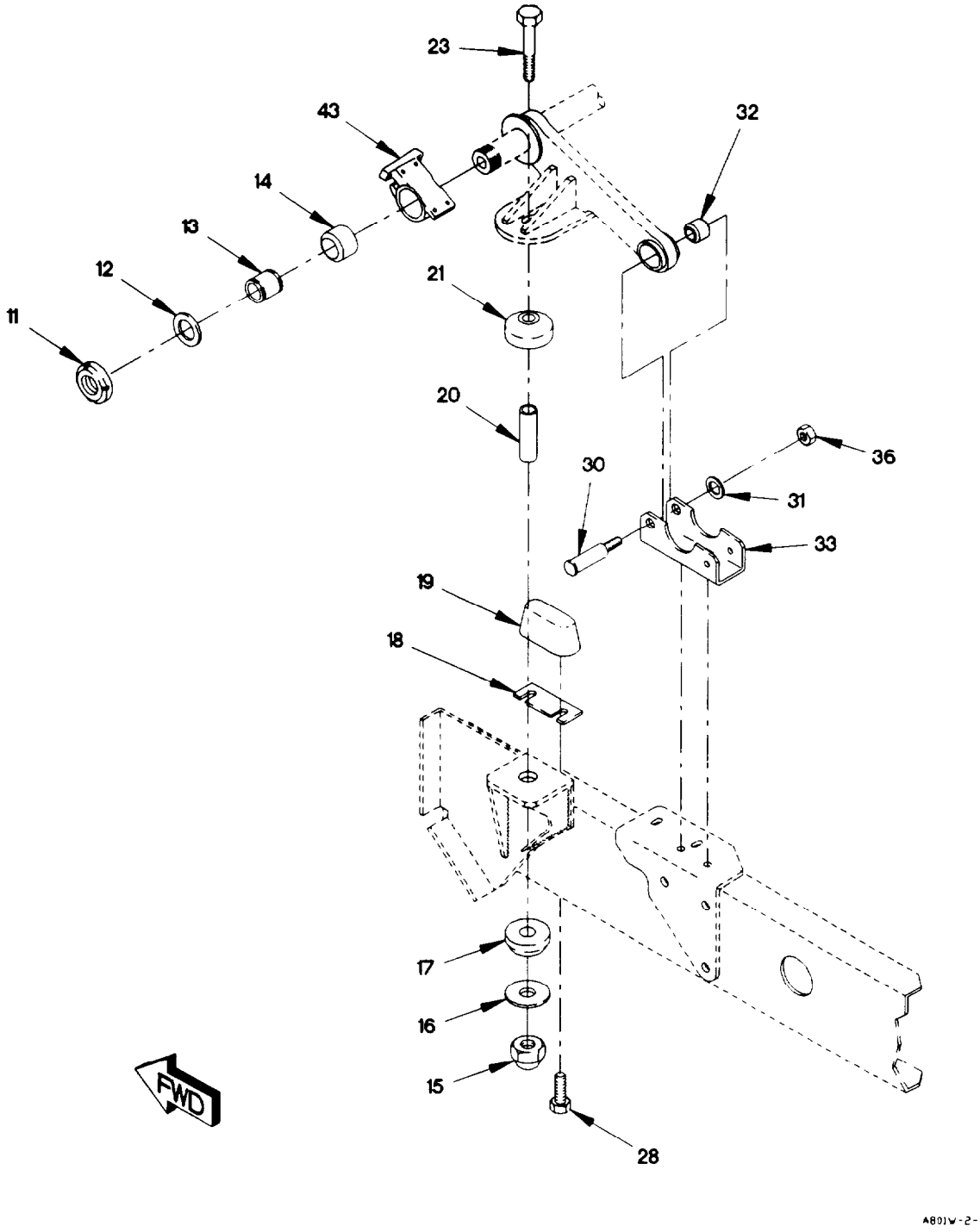

Figure 188. Front Cab Supports (Sheet 2 of 2)

(1) ITEM NO	(2) SMR CODE	(3) FSCM	(4) PART NUMBER	(5) DESCRIPTION AND USABLE ON CODE (UOC)		(6) QTY
				GROUP 1801: BODY, CAB, HOOD, AND HULL ASSEMBLIES		
				FIG. 188 FRONT CAB SUPPORTS		
1	PAOZZ	19207	12414473-016	WASHER, FLAT M15		3
2	PAOZZ	96906	MS9955-113	O-RING		1
3	PAOZZ	19207	12418222	SPACER, SLEEVE		1
4	PAOZZ	19207	12414315-017	NUT, PLAIN, HEXAGON M18 X 1.5		1
5	PAOZZ	19207	12418221	BOLT, SHOULDER M181 X 1 X 205		1
6	PAOZZ	96906	MS24665-457	PIN, COTTER		3
7	PAOZZ	19207	12414475-115	SCREW, CAP, SOCKET HE M10 X 1.5 X 35		8
8	PAOZZ	81349	MIL-W-70342/4	WASHER, FLAT M10		4
9	PAOZZ	19207	12418177	HOUSING, BEARING UNI		1
10	PAOZZ	19207	12414475-125	SCREW, CAP, SOCKET HE M10 X 1.5 X 60		4
11	PAOZZ	81349	D70329/1-A040	NUT, PLAIN, ROUND M40 X 1.5		2
12	PAOZZ	19207	12418156	WASHER, FLAT M4		2
13	PAOZZ	19207	12418155	BUSHING, SLEEVE		2
14	PAOZZ	19207	12418159	BUSHING, NONMETALLIC		2
15	PAOZZ	19207	12414315-020	NUT, PLAIN, HEXAGON M20 X 1.5		2
16	PAOZZ	19207	12418154	WASHER, FLAT M21		2
17	PAOZZ	81860	25920-1	MOUNT, RESILIENT		2
18	PAOZZ	19207	12420546	SPACER, SPECIAL SHAP	V	
19	PAOZZ	81860	25921-1	BUMPER, NONMETALLIC		2
20	PAOZZ	19207	12418158	SPACER, SLEEVE		2
21	PAOZZ	81860	25926	MOUNT, RESILIENT		2
22	PAOZZ	19207	12418168	SUPPORT, CAB ASSEMBL		1
23	PAOZZ	19207	12414551-124	BOLT, MACHINE M20 X 1.5 X 110		2
24	PAOZZ	19207	12418219	SPACER, SLEEVE		1
25	PAOZZ	21969	A 13 DIN125-ST	WASHER, FLAT M13		1
26	PAOZZ	19207	12418216	ARM, PIVOTING WHEEL		2
27	PAOZZ	19207	12417962-088	PIN, STRAIGHT, HEADED		1
28	PAOZZ	19207	12414419-112	SCREW, CAP, HEXAGON H M10 X 1.5 X 25		4
29	PAOZZ	19207	12414307-078	BOLT, MACHINE M12 X 1.5 X 35		4
30	PAOZZ	19207	12418153	BOLT, SHOULDER M12 X 1.75 X 72		2
31	PAOZZ	19207	12414582-006	WASHER, FLAT M13		2
32	PAOZZ	19207	12419961	BUSHING, SLEEVE		2
33	PAOZZ	19207	12418167	BRACKET, DOUBLE ANGL		2
34	PAOZZ	81349	D63474/1-27	WASHER, SPRING TENSI M15.5		2
35	PAOZZ	19207	12414474-018	NUT, PLAIN, HEXAGON M12 X 1.75		2
36	PAOZZ	19207	12414308-021	NUT, SELF-LOCKING, EX M12 X 1.5		4
37	PAOZZ	0FW39	12417962-081	PIN, STRAIGHT, HEADED		1
38	PAOZZ	19207	12418217	BRACE, RETACTABLE S		1
39	PAOZZ	96906	MS9770-116	O-RING		1
40	PAOZZ	19207	12418218	BUSHING SLEEVE		1
41	PAOZZ	19207	12417962-046	PIN, STRAIGHT, HEADED		1
42	PAOZZ	96906	MS24665-385	PIN, COTTER		1
43	PAOZZ	19207	12418160	HOUSING, BEARING UNI		1
				END OF FIGURE		

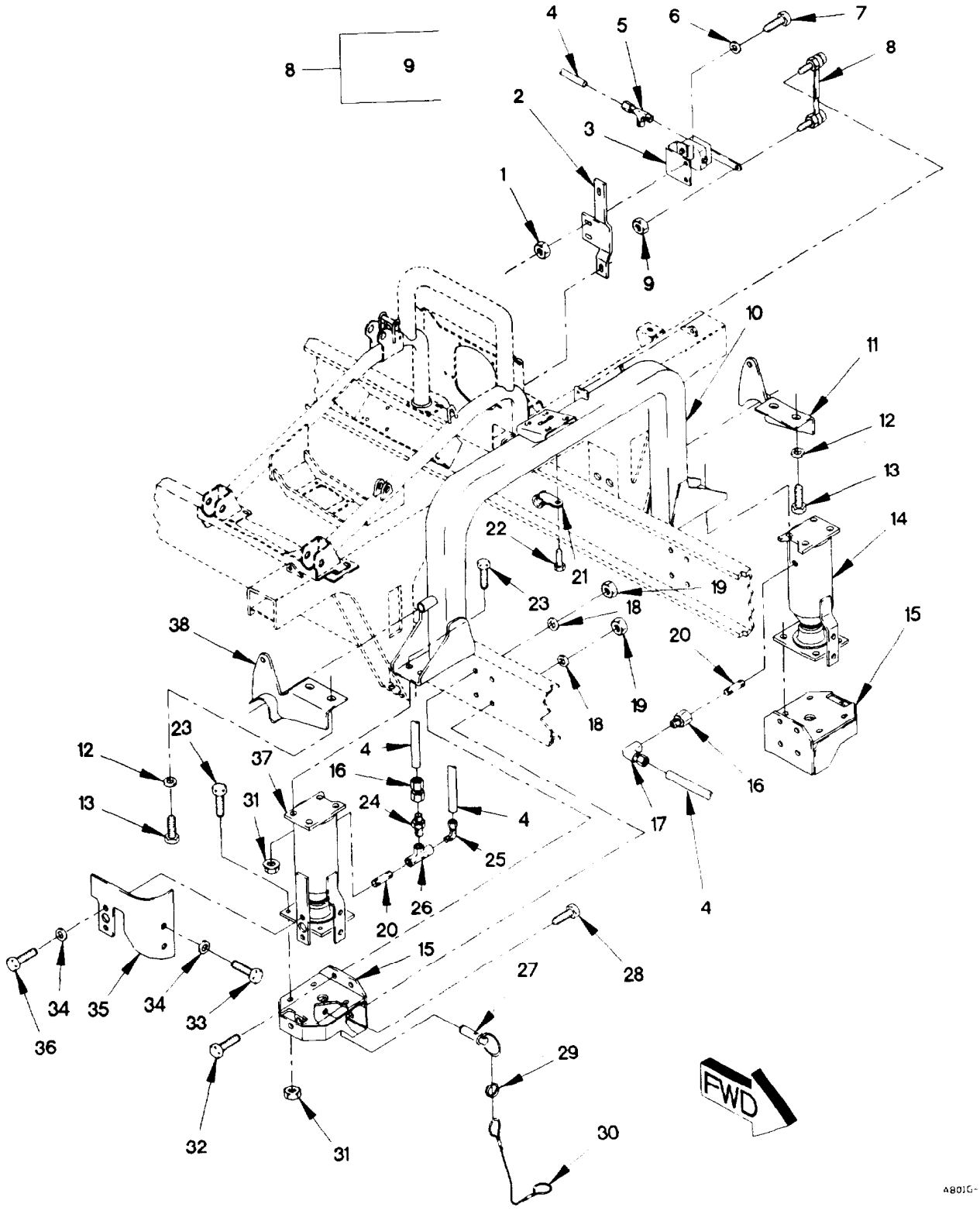

Figure 189. Rear Cab Support, Leveling Valve, Latch, Air Spring, Hoses, and Fittings (Sheet 1 of 3)

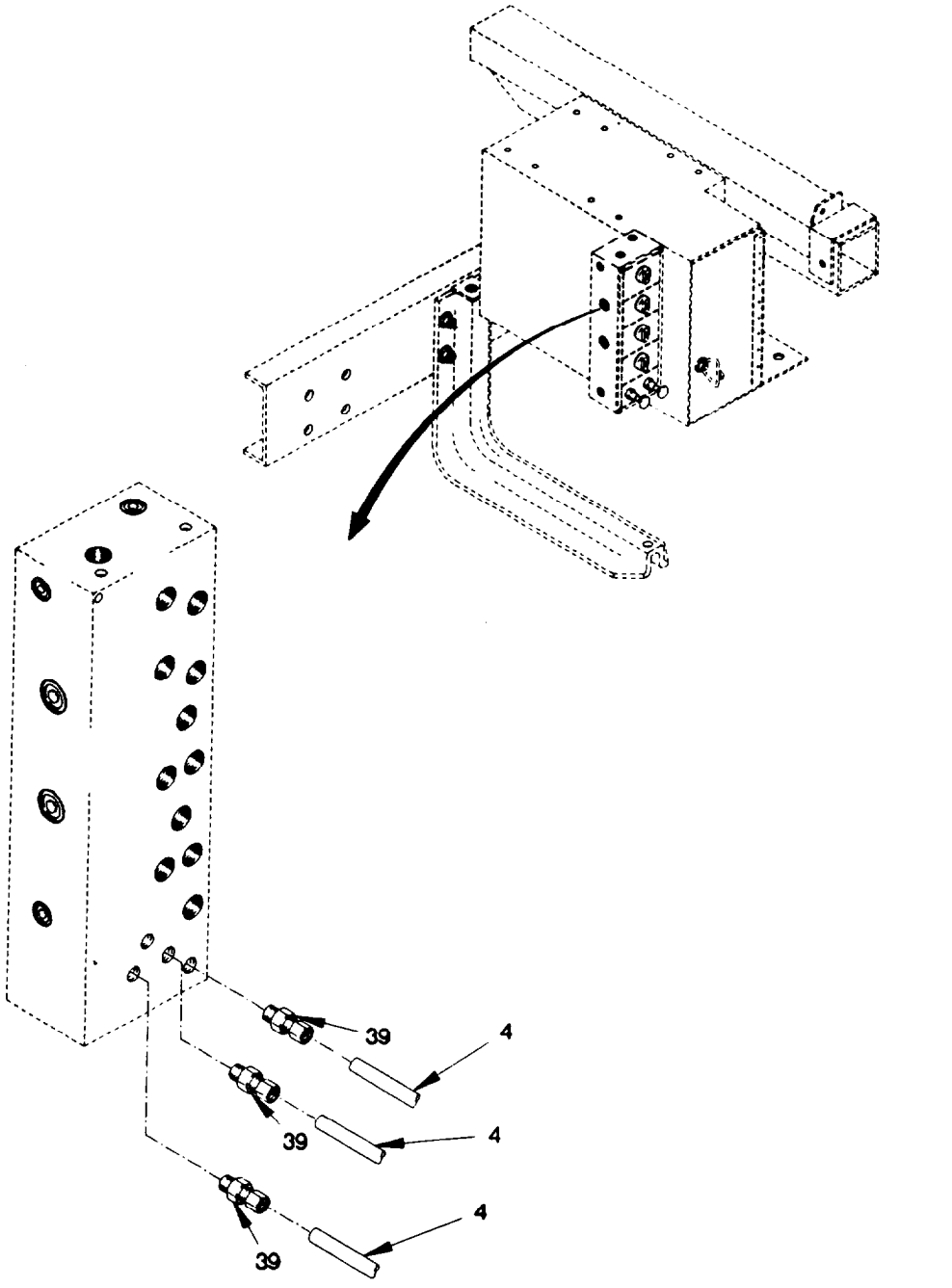

Figure 189. Rear Cab Support, Leveling Valve, Latch, Air Spring, Hoses, and Fittings (Sheet 2 of 3)

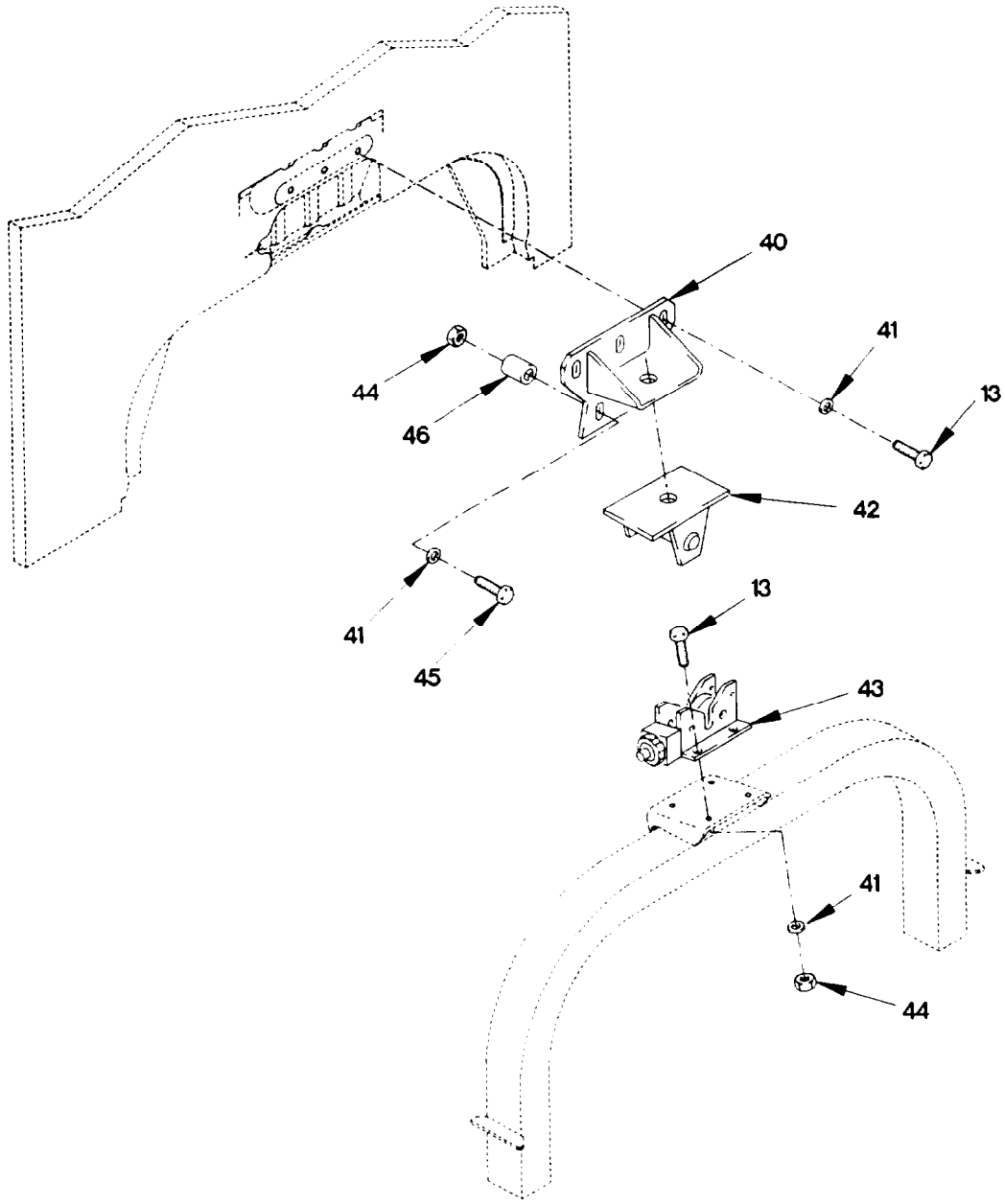

Figure 189. Rear Cab Support, Leveling Valve, Latch, Air Spring, Hoses, and Fittings (Sheet 3 of 3)

(1) ITEM NO	(2) SMR CODE	(3) FSCM	(4) PART NUMBER	(5) DESCRIPTION AND USABLE ON CODE (UOC)		(6) QTY
				GROUP 1801: BODY, CAB, HOOD, AND HULL ASSEMBLIES		
				FIG. 189 REAR CAB SUPPORT, LEVELING VALVE, LATCH, AIR SPRING, HOSES AND FITTINGS		
1	PAOZZ	19207	12414308-002	NUT, SELF-LOCKING, EX M6 X 1		2
2	PAOZZ	19207	12420641	BRACKET, MOUNTING		1
3	PAOZZ	4B046	PP975900	VALVE, ROTARY, SELECT		1
4	MOOZZ	19207	12420572-004X	TUBING, NONMETALLIC MAKE FROM HOSE P/N: NT-10004-BLK (79470), CUT TO LENGTH	V	
5	PAOZZ	0TE27	AQ64-DOT-4-SIL	TEE, TUBE		1
6	PAOZZ	19200	12524631-1	WASHER, FLAT M6		2
7	PAOZZ	56161	10503805	SCREW, CAP, HEXAGON H M6 X 1 X 20		2
8	PAOZZ	26952	PP941900	CONNECTING LINK, RIG		1
9	PAOZZ	96906	MS51922-1	.NUT, SELF-LOCKING, HE 1/4-20		2
10	PAOZZ	19207	12420636	SUPPORT, CAB ASSEMBL		1
11	PAOZZ	19207	12420534-002	LATCH, MORTISE		1
12	PAOZZ	81349	MIL-W-70342/4	WASHER, FLAT M10		4
13	PAOZZ	05824	M10X1.5X30 DIN933 ST	SCREW, CAP, HEXAGON H M10 X 1.5 X 30		11
14	PAOZZ	26952	PP939900-1	AIR SPRING, VEHICULA		1
15	PAOZZ	19207	12420637	BRACKET, MOUNTING		2
16	PAOZZ	81343	4-2-100103BA	ADAPTER, STRAIGHT, PI		1
17	PAOZZ	81343	4-2 100203BA	ELBOW, PIPE TO TUBE		1
18	PAOZZ	21969	A 13 DIN125-ST	WASHER, FLAT M13		8
19	PAOZZ	19207	12414308-022	NUT, SELF-LOCKING, EX M12 X 1.75		8
20	PAOZZ	96906	MS51953-10	NIPPLE, PIPE		2
21	PAOZZ	18076	S630H-10	CLAMP, LOOP		1
22	PAOZZ	56161	10503805	SCREW, CAP, HEXAGON H M6 X 1 X 20		1
23	PAOZZ	19207	12414307-064	BOLT, MACHINE M10 X 1.5 X 30		16
24	PAOZZ	0FW39	12421167	VALVE, CHECK		1
25	PAOZZ	81343	4-2 100202BA	ELBOW, PIPE TO TUBE		1
26	PAOZZ	81343	2-2-2 130438B	TEE, PIPE		1
27	PAOZZ	81349	M45952/1-C10-20	PIN, QUICK RELEASE		2
28	PAOZZ	19207	12414419-135	SCREW, CAP, HEXAGON H M12 X 1.75 X 35		7
29	PAOZZ	84256	13-4CD	RING, RETAINING		2
30	PAOZZ	84256	LT1504C6-16	WIRE ROPE ASSEMBLY		2
31	PAOZZ	19207	12414308-019	NUT, SELF-LOCKING, EX M10 X 1.5		16
32	PAOZZ	19207	12414419-136	SCREW, CAP, HEXAGON H M12 X 1.75 X 40		1
33	PAOZZ	19207	12414419-058	SCREW, CAP, HEXAGON H M5 X .8 X 16		4
34	PAOZZ	19207	12417948-001	WASHER, FLAT M5		6
35	PAOZZ	19207	12420729	GUARD, SPLASH, VEHICU		2
36	PAOZZ	56161	10503657	SCREW, CAP, HEXAGON H M5 X .8 X 12		2
37	PAOZZ	26952	PP938900-1	AIR SPRING, VEHICULA		1
38	PAOZZ	19207	12420534-001	LATCH, MORTISE		1

(1) ITEM NO	(2) SMR CODE	(3) FSCM	(4) PART NUMBER	(5) DESCRIPTION AND USABLE ON CODE (UOC)	(6) QTY
39	PAOZZ	0TE27	AQ68-DOT-4X2SIL	ADAPTER, STRAIGHT, PI	3
40	PAOZZ	19207	12420585	BRACKET, MOUNTING	1
41	PAOZZ	19207	12414473-014	WASHER, FLAT M10	9
42	PAOZZ	26952	PP790900	BRACKET, VEHICULAR C	1
43	PAOZZ	26952	LH50000105	LATCH, DOOR, VEHICULA	1
44	PAOZZ	19207	12414315-009	NUT, SELF-LOCKING, HE M10 X 1.5	6
45	PAOZZ	15526	DIN933-M10X35-8.8-A4C	SCREW, CAP, HEXAGON H M10 X 1.5 X 35	2
46	PAOZZ	19207	12420586	SPACER, SLEEVE	2

END OF FIGURE

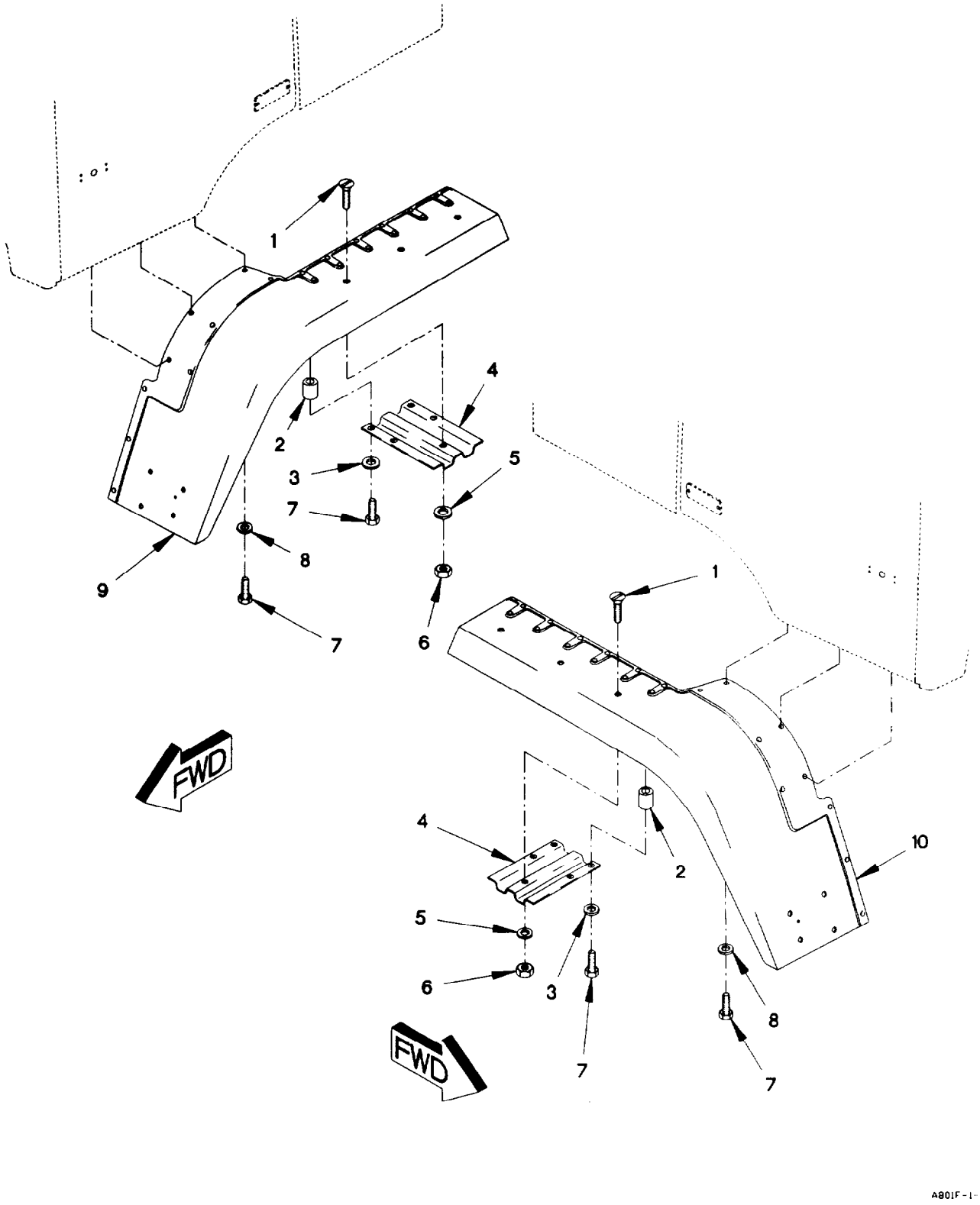

Figure 190. Cab Fenders (Sheet 1 of 2)

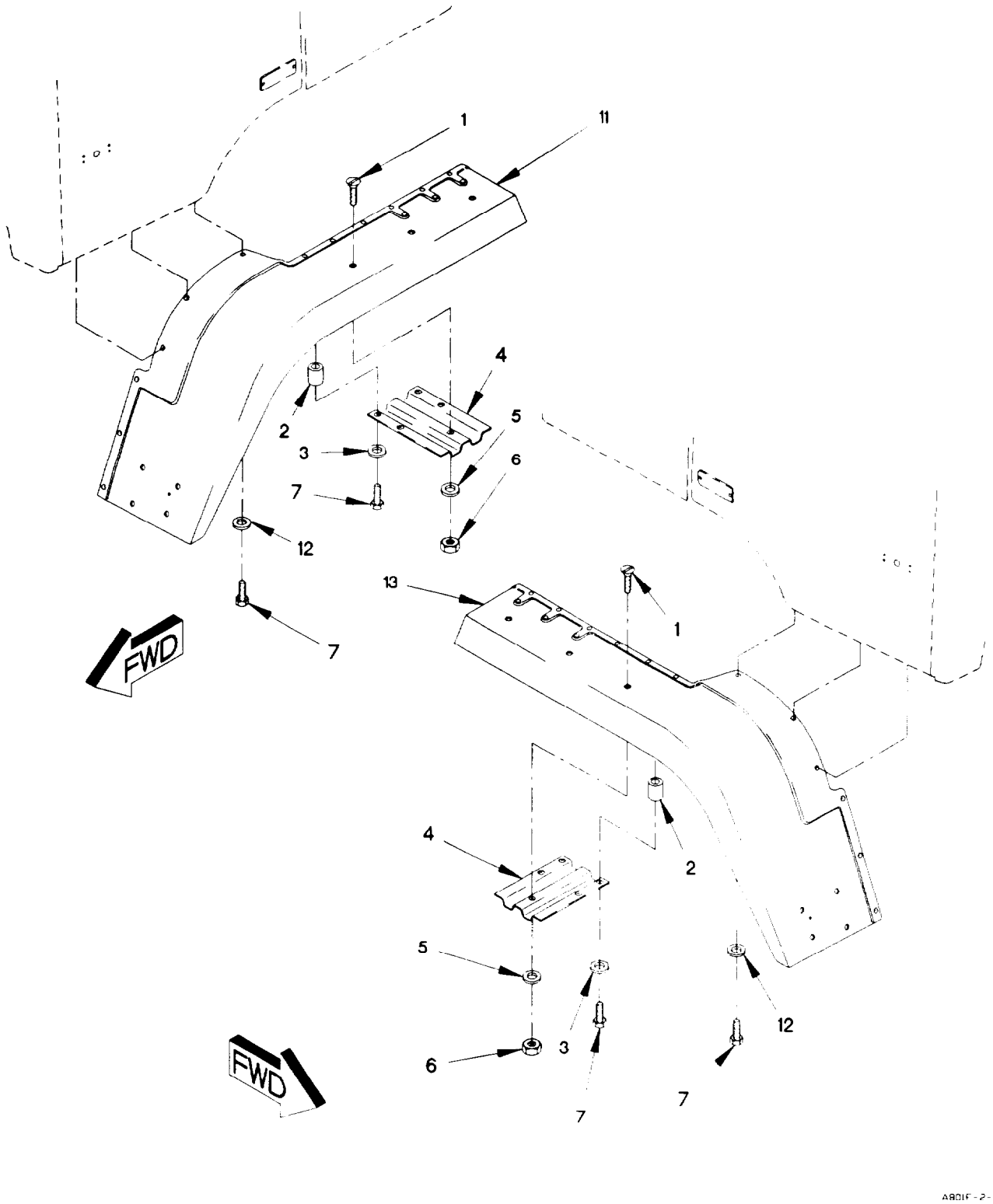

Figure 190. Cab Fenders (Sheet 2 of 2)

(1) ITEM NO	(2) SMR CODE	(3) FSCM	(4) PART NUMBER	(5) DESCRIPTION AND USABLE ON CODE (UOC)	(6) QTY
				GROUP 1801: BODY, CAB, HOOD, AND HULL ASSEMBLIES	
				FIG. 190 CAB FENDERS	
1	PAOZZ	19207	12414419-077	SCREW, HEX HEAD	6
2	PAOZZ	0FW39	12378759	SPACER, SLEEVE	24
3	PAOZZ	34914	990 3861	WASHER, FLAT M8.4	24
4	PAOZZ	0FW39	12417794-001	BRACE, FENDER	6
5	PAOZZ	19207	12414473-011	WASHER, FLAT	6
6	PAOZZ	15526	DIN 934 ST M6	NUT, SELF-LOCKING, HE M6 X 1	6
7	PAOZZ	05523	42051-14	SCREW, CAP, HEXAGON H M8 X 1.25 X 14 UOC: LAA, LAB, LAD, LWB, LWD,	36
7	PAOZZ	05523	42051-14	SCREW, CAP, HEXAGON H M8 X 1.25 X 14 UOC: LAC, LWC,	30
8	PAOZZ	19207	12420512	WASHER, FLAT M6	12
9	PAOZZ	19207	12420137-001	FENDER, VEHICULAR UOC: LAA, LAB, LAD, LWB, LWD,	1
10	PAOZZ	19207	12420137-002	FENDER, VEHICULAR UOC: LAA, LAB, LAD, LWB, LWD,	1
11	PAOZZ	19207	12420137-003	FENDER, VEHICULAR UOC: LAC, LWC,	1
12	PAOZZ	19207	12417975-008	WASHER, FLAT M8.4 UOC: LAA, LAB, LAD, LWB, LWD,	6
13	PAOZZ	19207	12420137-004	FENDER, VEHICULAR UOC: LAC, LWC,	1
				END OF FIGURE	

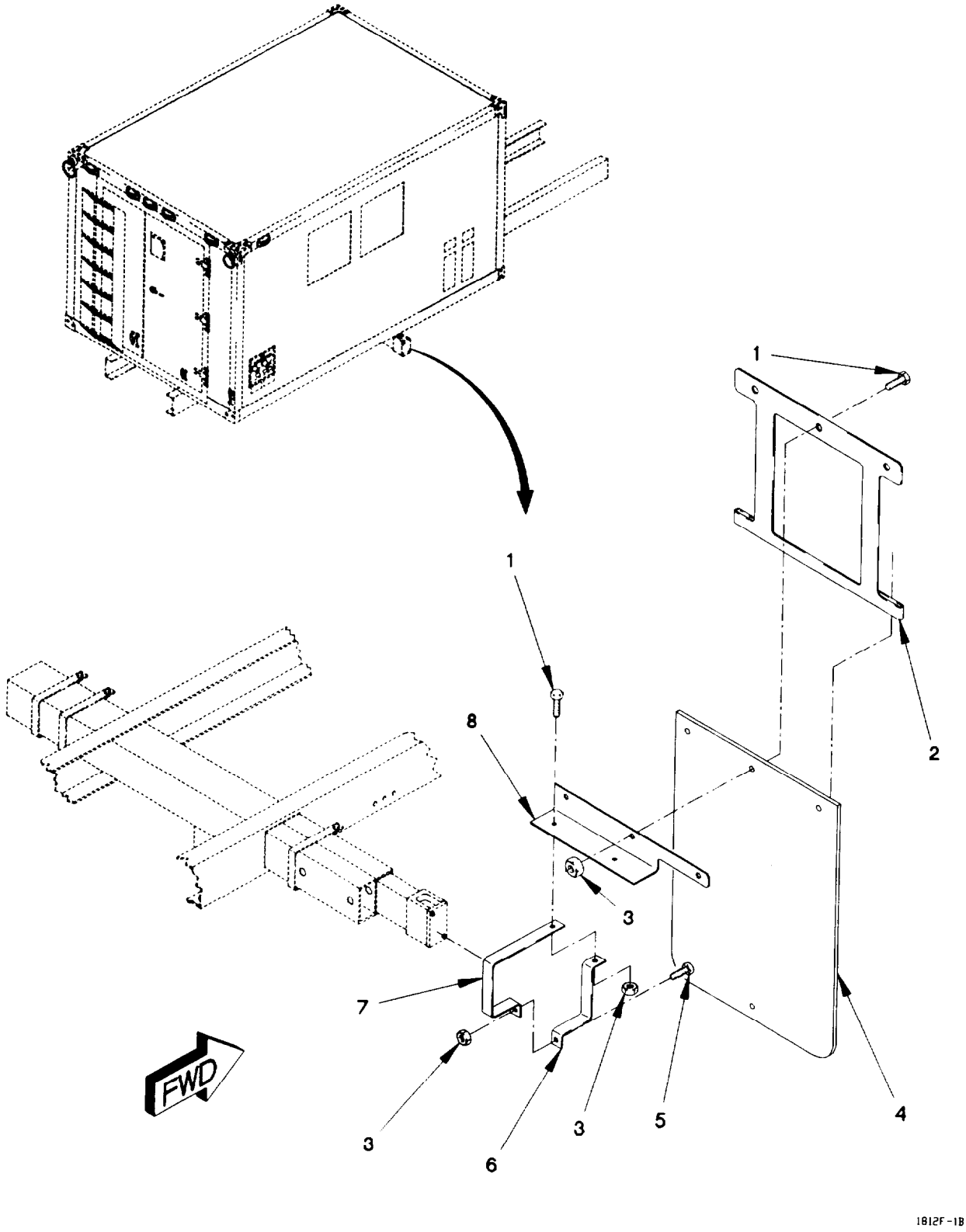

Figure 191. Van Splash Shields (Sheet 1 of 2)

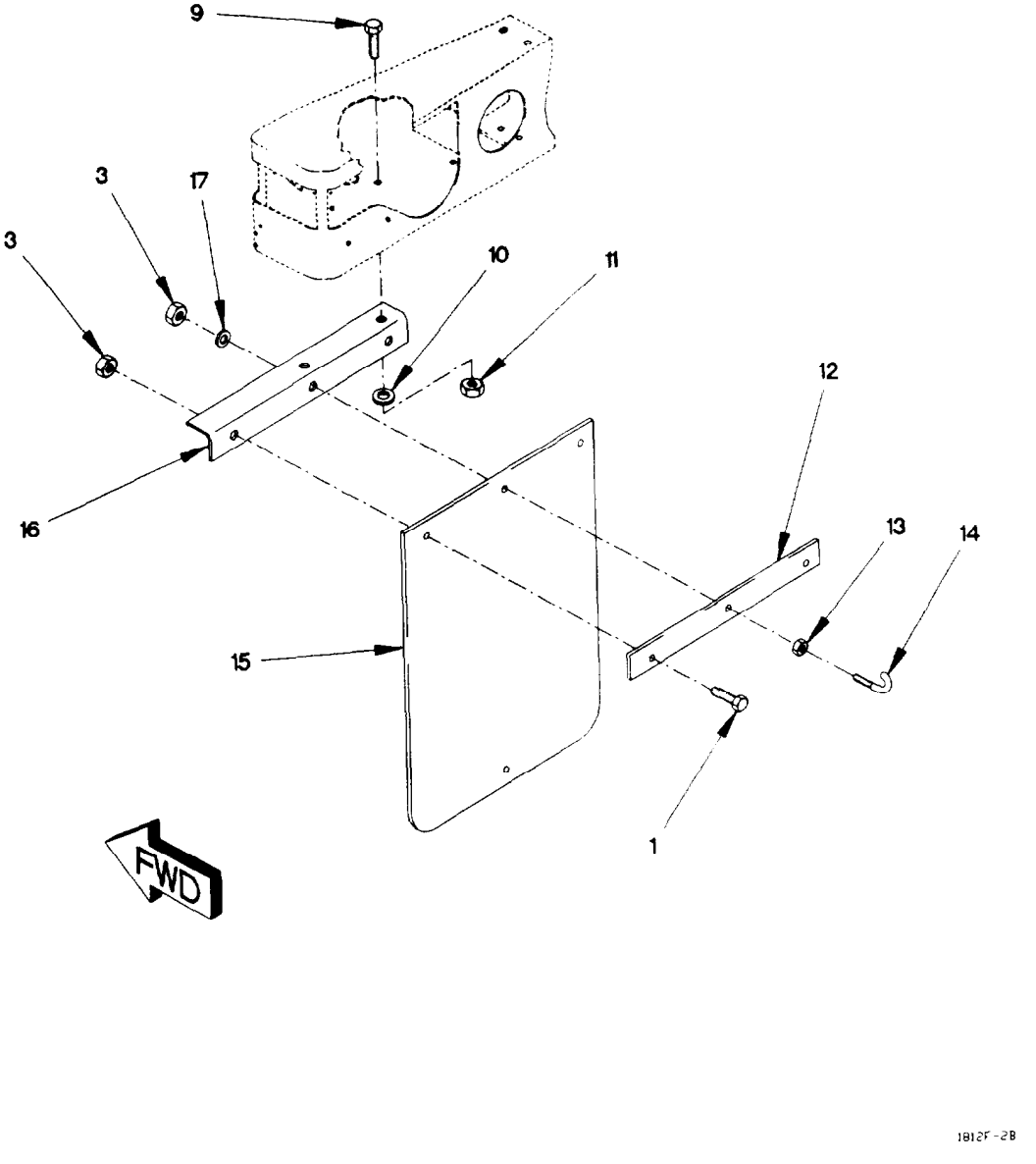

Figure 191. Van Splash Shields (Sheet 2 of 2)

(1) ITEM NO	(2) SMR CODE	(3) FSCM	(4) PART NUMBER	(5) DESCRIPTION AND USABLE ON CODE (UOC)	(6) QTY
				GROUP 1801: BODY, CAB, HOOD, AND HULL ASSEMBLIES	
				FIG. 191 VAN SPLASH SHIELDS	
1	PAOZZ	19207	12414307-025	BOLT, MACHINE M8 X 1 X 30 UOC: LAD, LWD,	16
2	PAOZZ	19207	12421386	PLATE, MOUNTING, LEFT SIDE UOC: LAD, LWD,	2
2	PAOZZ	19207	12421386-001	PLATE, MOUNTING, RIGHT SIDE UOC: LAD, LWD,	1
3	PAOZZ	19207	12414308-017	NUT, SELF-LOCKING, EX M8 X 1 UOC: LAD, LWD,	22
4	PAOZZ	0FW39	12417329	GUARD, SPLASH, VEHICU UOC: LAD, LWD,	2
5	PAOZZ	19207	12414307-024	BOLT, MACHINE M8 X 1 X 25 UOC: LAD, LWD,	4
6	PAOZZ	19207	12421384-002	CLAMP SPLASH SHIELD UOC: LAD, LWD,	4
7	PAOZZ	19207	12421384-001	CLAMP SPLASH, SHIELD UOC: LAD, LWD,	4
8	XDOZZ	0FW39	12421387-001	BRACKET ANGLE UOC: LAD, LWD,	1
8	XDOZZ	0FW39	12421387-002	BRACKET ANGLE UOC: LAD, LWD,	1
9	PAOZZ	19207	12417958-041	BOLT, MACHINE M10 X 1.25 30 UOC: LAD, LWD,	4
10	PAOZZ	19207	12414473-014	WASHER, FLAT M10 UOC: LAD, LWD,	4
11	PAOZZ	19207	12414474-014	NUT, PLAIN, HEXAGON M10 X 1.25 UOC: LAD, LWD,	4
12	PAOZZ	0FW39	12418489	PLATE, MOUNTING UOC: LAD, LWD,	2
13	PAOZZ	19207	12414474-011	NUT, PLAIN, HEXAGON M8 X 1 UOC: LAD, LWD,	2
14	PAOZZ	19207	12418479-001	BOLT, HOOK UOC: LAD, LWD,	2
15	PAOZZ	4K133	12418490	GUARD, SPLASH, VEHICU UOC: LAD, LWD,	2
16	PAOZZ	19207	12418488-001	BRACKET, ANGLE R.H. UOC: LAD, LWD,	1
16	PAOZZ	19207	12418488-002	BRACKET, ANGLE L.H. UOC: LAD, LWD,	1
17	PAOZZ	34914	990 3861	WASHER, FLAT M8.4 UOC: LAD, LWD,	2
				END OF FIGURE	

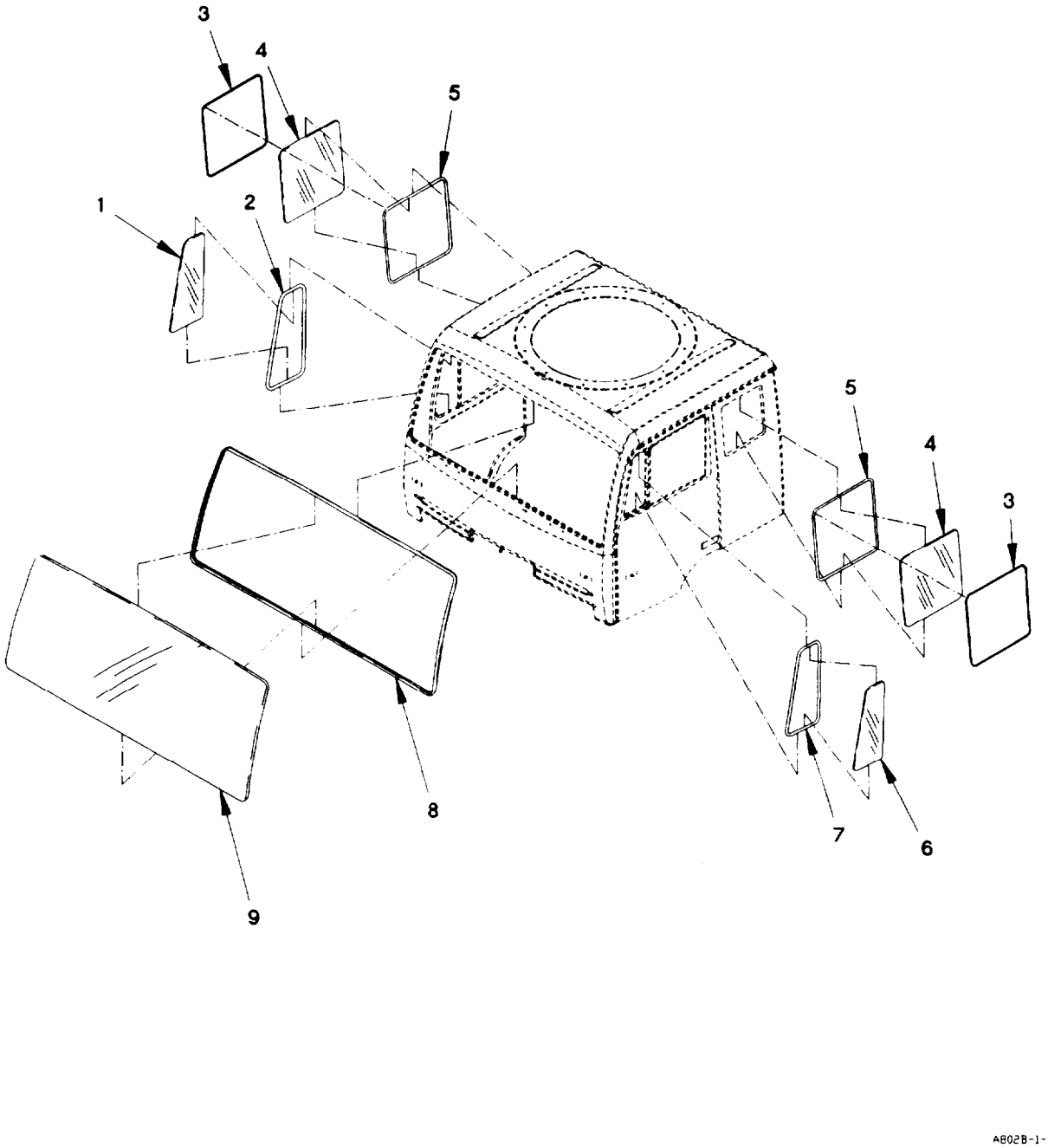

Figure 192. Standard Cab Windows

(1) ITEM NO	(2) SMR CODE	(3) FSCM	(4) PART NUMBER	(5) DESCRIPTION AND USABLE ON CODE (UOC)	(6) QTY
				GROUP 1802: FENDERS, RUNNING BOARDS, OUTRIGGERS, WINDSHIELD, GLASS	
				FIG. 192 STANDARD CAB WINDOWS	
1	PAFZZ	19207	12421151-002	WINDOW, VENT RIGHT SIDE UOC: LAA, LAB, LAD, LWB, LWD,	1
2	PAFZZ	0FW39	12417733	SEAL, NONMETALLIC SP UOC: LAA, LAB, LAD, LWB, LWD,	1
3	PAFZZ	0FW39	12421754	SEAL, NONMETALLIC SP UOC: LAA, LAB, LAD, LWB, LWC, LWD,	2
4	PAFZZ	0FW39	12418138	WINDOW, VEHICULAR UOC: LAA, LAB, LAD, LWB, LWD,	2
5	PAFZZ	0FW39	12417784	SEAL, NONMETALLIC SP UOC: LAA, LAB, LAD, LWB, LWD,	2
6	PAFZZ	19207	12421151-001	WINDOW, VENT LEFT SIDE UOC: LAA, LAB, LAD, LWB, LWD,	1
7	PAFZZ	0FW39	12417734	SEAL, NONMETALLIC SP UOC: LAA, LAB, LAD, LWB, LWD,	1
8	PAFZZ	0FW39	12417731	SEAL, NONMETALLIC SP UOC: LAA, LAB, LAD, LWB, LWD,	1
9	PAFZZ	0FW39	12414360	WINDOW, VEHICULAR UOC: LAA, LAB, LAD, LWB, LWD,	1
				END OF FIGURE	

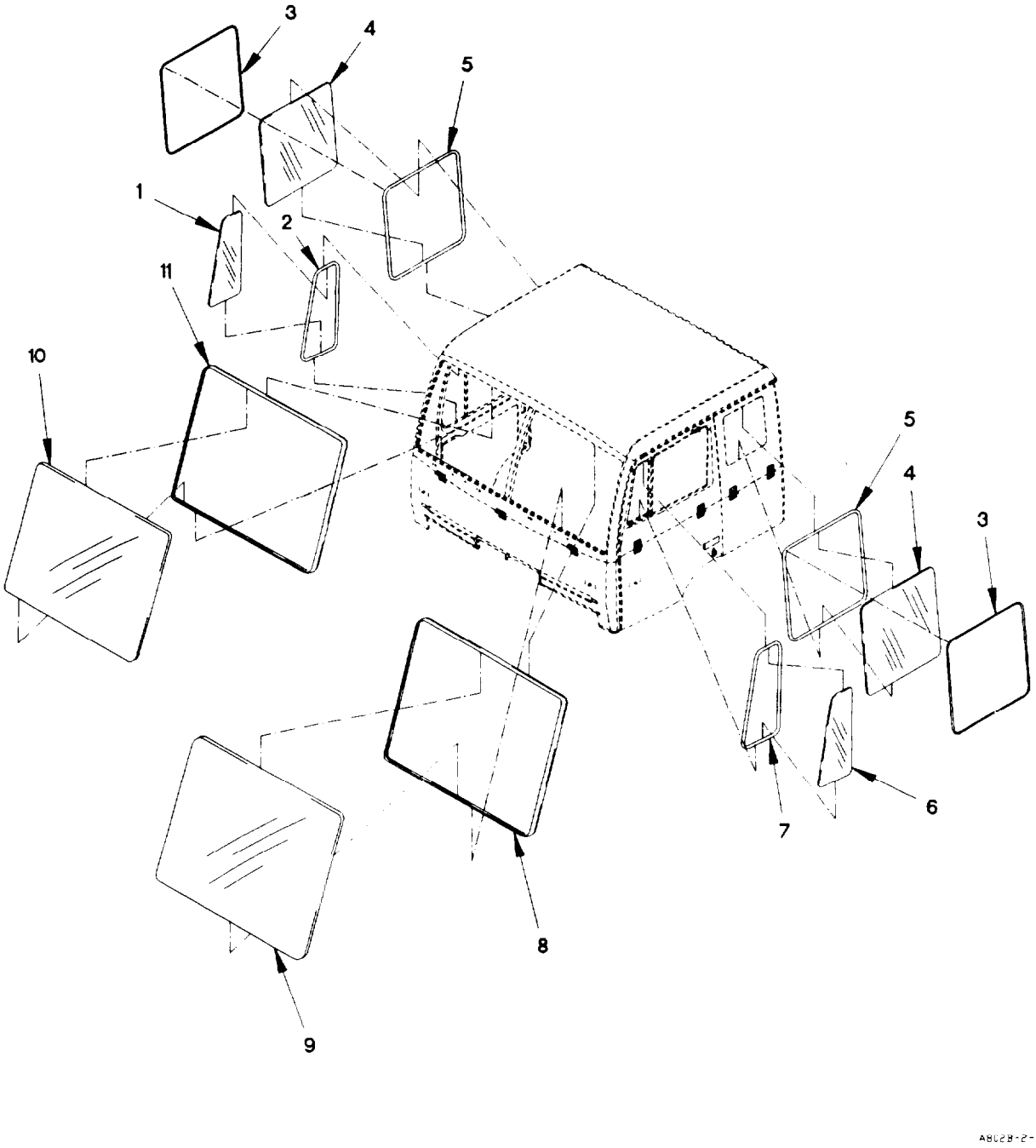

Figure 193. Air Drop Cab Windows

(1) ITEM NO	(2) SMR CODE	(3) FSCM	(4) PART NUMBER	(5) DESCRIPTION AND USABLE ON CODE (UOC)	(6) QTY
				GROUP 1802: FENDERS, RUNNING BOARDS, OUTRIGGERS, WINDSHIELD, GLASS	
				FIG. 193 AIR DROP CAB WINDOWS	
1	PAFZZ	0FW39	12418136-002	WINDOW, VEHICULAR RIGHT SIDE UOC: LAC, LWC,	1
2	PAFZZ	19207	12418395-002	SEAL, NONMETALLIC SP UOC: LAC, LWC,	1
3	PAFZZ	0FW39	12421754	SEAL, NONMETALLIC SP UOC: LAC, LWC,	2
4	PAFZZ	0FW39	12417855	WINDOW, VEHICULAR UOC: LAC, LWC,	2
5	PAFZZ	19207	12417856	SEAL, NONMETALLIC SP UOC: LAC, LWC,	2
6	PAFZZ	19207	12418136-001	WINDOW, VEHICULAR LEFT SIDE UOC: LAC, LWC,	2
7	PAFZZ	19207	12418395-001	SEAL, NONMETALLIC SP UOC: LAC, LWC,	1
8	PAFZZ	19207	12417853-001	SEAL, NONMETALLIC SP UOC: LAC, LWC,	1
9	PAFZZ	0FW39	12414356-001	WINDOW, VEHICULAR UOC: LAC, LWC,	1
10	PAFZZ	2K677	V192120002	WINDOW, VEHICULAR UOC: LAC, LWC,	1
11	PAFZZ	19207	12417853-002	SEAL, NONMETALLIC SP UOC: LAC, LWC,	1
				END OF FIGURE	

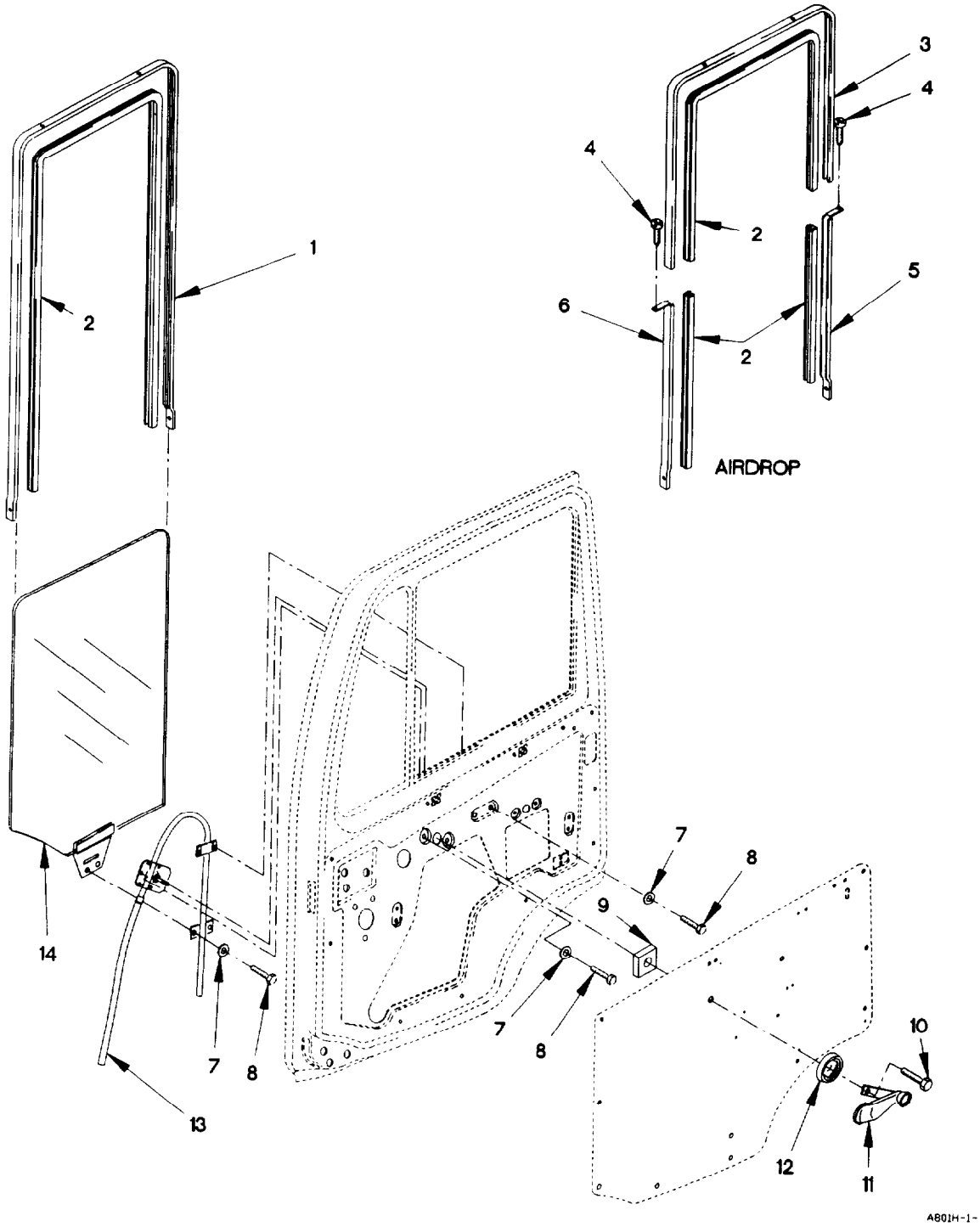

Figure 194. Cab Door, Windows, and Fittings (Sheet 1 of 4)

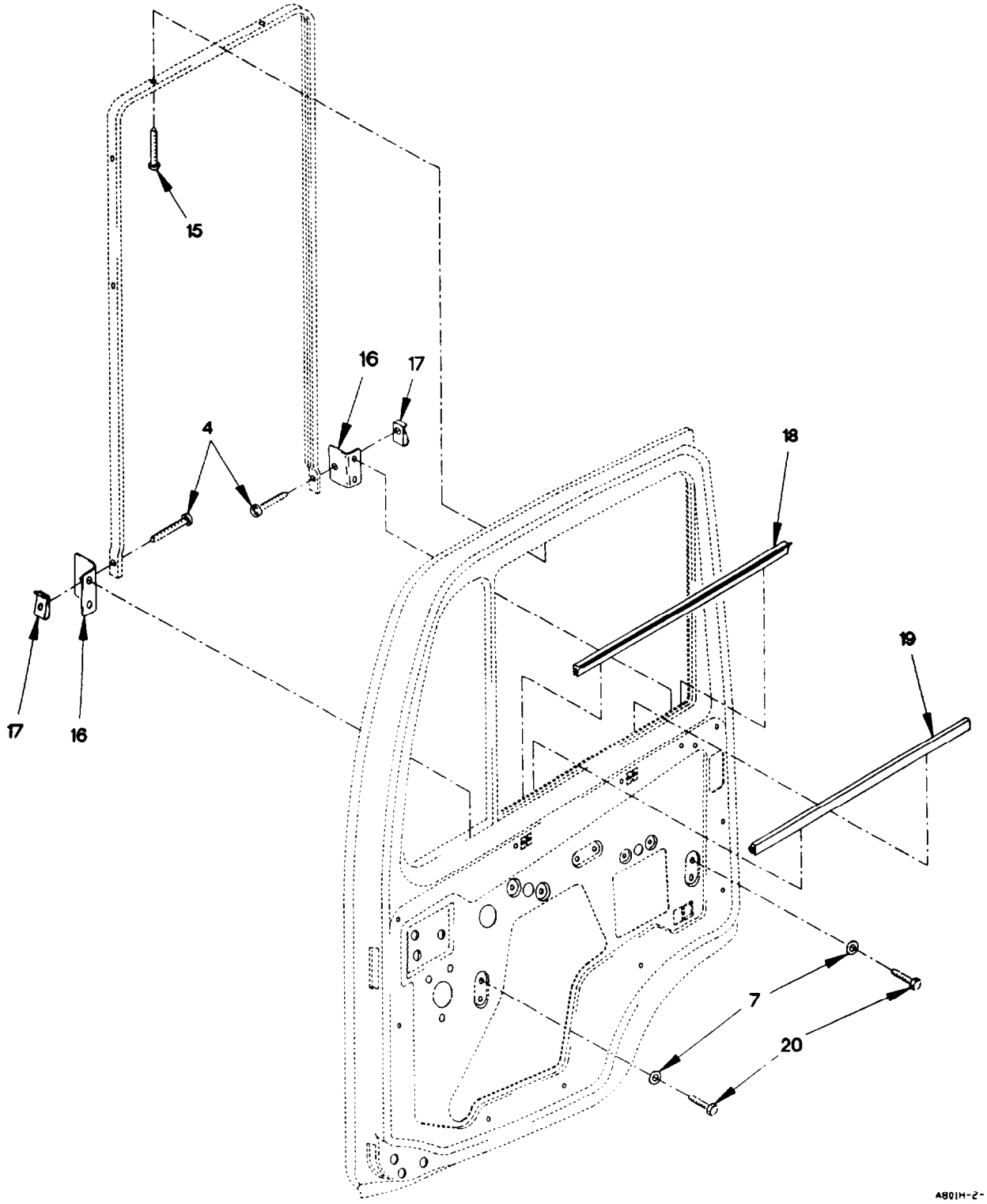

Figure 194. Cab Door, Windows, and Fittings (Sheet 2 of 4)

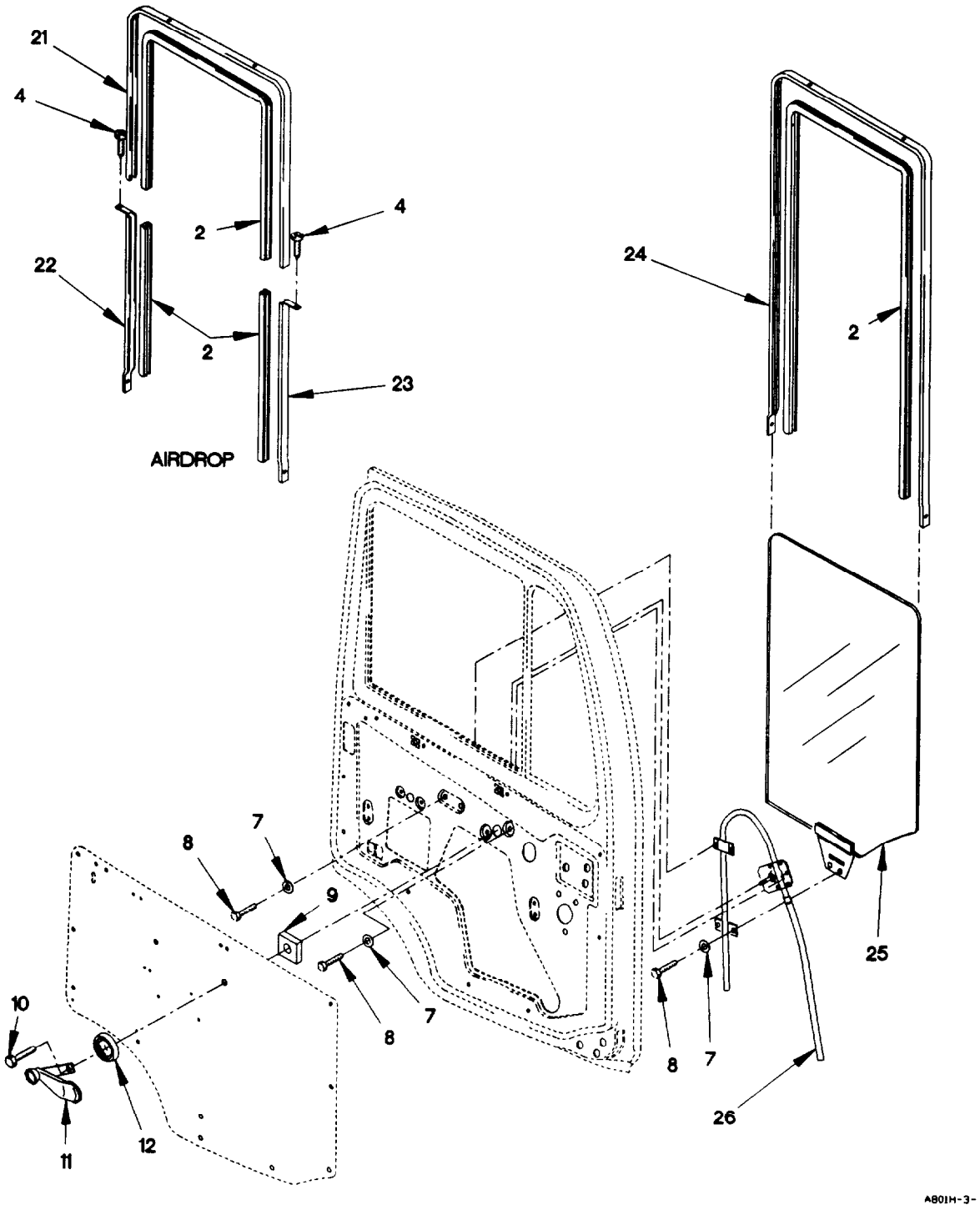

Figure 194. Cab Door, Windows, and Fittings (Sheet 3 of 4)

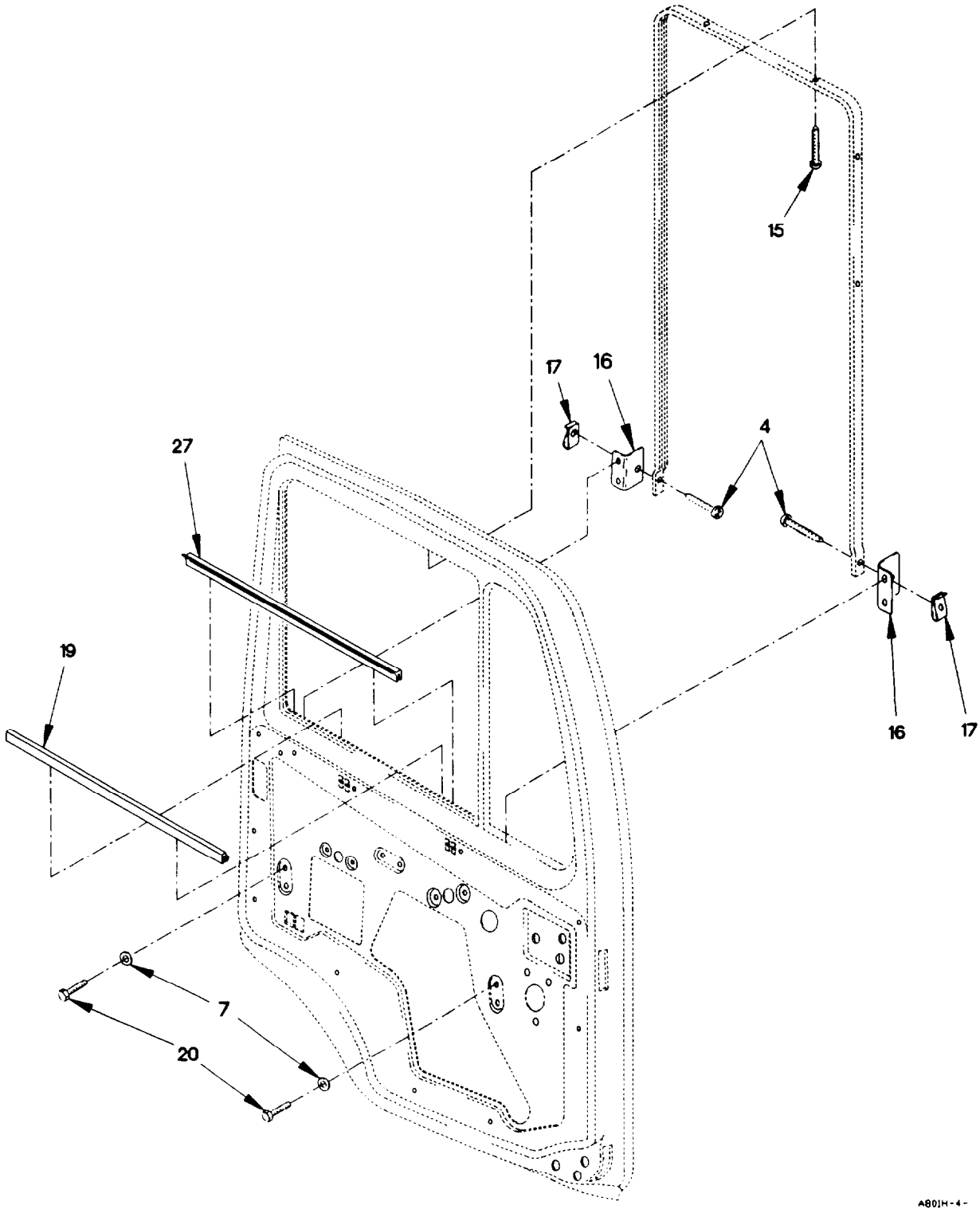

Figure 194. Cab Door, Windows, and Fittings (Sheet 4 of 4)

(1) ITEM NO	(2) SMR CODE	(3) FSCM	(4) PART NUMBER	(5) DESCRIPTION AND USABLE ON CODE (UOC)		(6) QTY
				GROUP 1802: FENDERS, RUNNING BOARDS, OUTRIGGERS, WINDSHIELD, GLASS		
				FIG. 194 CAB DOOR WINDOWS AND FITTINGS		
1	PAOZZ	0FW39	12420806-002	CHANNEL, LFIT, VEHICL		1
				UOC: LAA, LAB, LAD, LWB, LWD,		
2	PAOZZ	S7622	K9639	SEAL, NONMETALLIC CH	V	
3	PAOZZ	19207	12421160-004	CHANNEL, WINDOW GUID		1
				UOC: LAC, LWC,		
4	PAOZZ	19207	12414310-046	SCREW, TAPPING M4.8 X 19		4
				UOC: LAA, LAB, LAD, LWB, LWD,		
4	PAOZZ	19207	12414310-046	SCREW, TAPPING M4.8 X 19		8
				UOC: LAC, LWC,		
5	PAOZZ	19207	12421160-006	CHANNEL, WINDOW GUID		1
				UOC: LAC, LWC,		
6	PAOZZ	19207	12421160-002	CHANNEL, WINDOW GUID		1
				UOC: LAC, LWC,		
7	PAOZZ	19207	12417975-006	SPACER, RING 6.4MM ID X 18		20
8	PAOZZ	56161	10503516	SCREW, CAP, HEXAGON H		12
9	PAOZZ	19207	12417717	MOUNT, RESILIENT		2
10	PAOZZ	64678	000084006134	SCREW, MACHINE M6 X 12 X 4		2
11	PAOZZ	0FW39	12418392	HANDLE, WINDOW REGU		2
12	PAOZZ	0FW39	12417464	ESCUTCHEON PLATE		2
13	PAOZZ	0FW39	12417705-001	REGULATOR, VEHICLE W RIGHT-HAND		1
14	PAOZZ	0FW39	12414355-002	WINDOW, VEHICULAR RIGHT SIDE		1
15	PAOZZ	19207	12414310-014	SCREW, TAPPING M2.9 X 13		12
16	PAOZZ	0FW39	12417472	PLATE, MOUNTING		4
17	PAOZZ	19207	12419830-009	NUT, CLIP-ON		4
18	MOOZZ	0FW39	12417469X540	SEAL, NONMETALLIC SP MAKE FROM SEAL	V	
				P/N 12417469 (0FW39) X 540 MM LONG		
				UOC: LWC,		
18	PAOZZ	0FW39	12420633-002	SEAL, NONMETALLIC RIGHT		1
				UOC: LAA, LAB, LAD, LWB, LWD,		
19	PAOZZ	0FW39	12417468	SEAL, NONMETALLIC AN		2
20	PAOZZ	15526	933-M6X12	SCREW, CAP, HEXAGON H M6 X 1 X 12		8
21	PAOZZ	19207	12421160-003	CHANNEL, WINDOW GUID		1
				UOC: LAC, LWC,		
22	PAOZZ	19207	12421160-005	CHANNEL, WINDOW GUID		1
				UOC: LAC, LWC,		
23	PAOZZ	19207	12421160-001	CHANNEL, WINDOW GUID		1
				UOC: LAC, LWC,		
24	PAOZZ	0FW39	12420806-001	CHANNEL, LIFT, VEHICL		1
				UOC: LAA, LAB, LAD, LWB, LWD,		
25	PAOZZ	0FW39	12414355-001	WINDOW, VEHICULAR LEFT SIDE		1
26	PAOZZ	19207	12417706-001	REGULATOR, VEHICLE W LEFT-HAND		1
27	PAOZZ	19207	12420633-001	SEAL, NONMETALLIC LEFT		1

END OF FIGURE

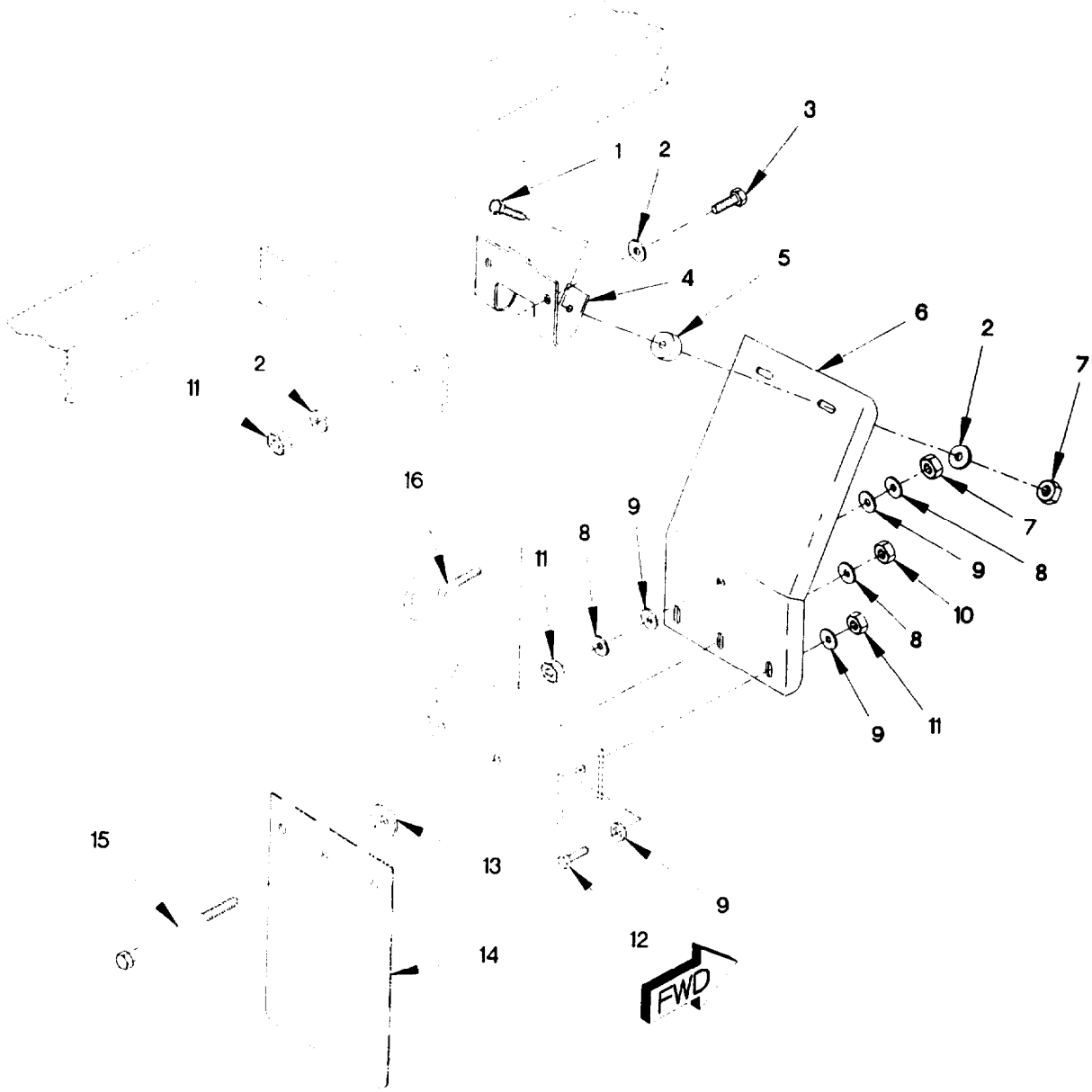

Figure 195. Rear Fenders and Splash Guards (Sheet 1 of 2)

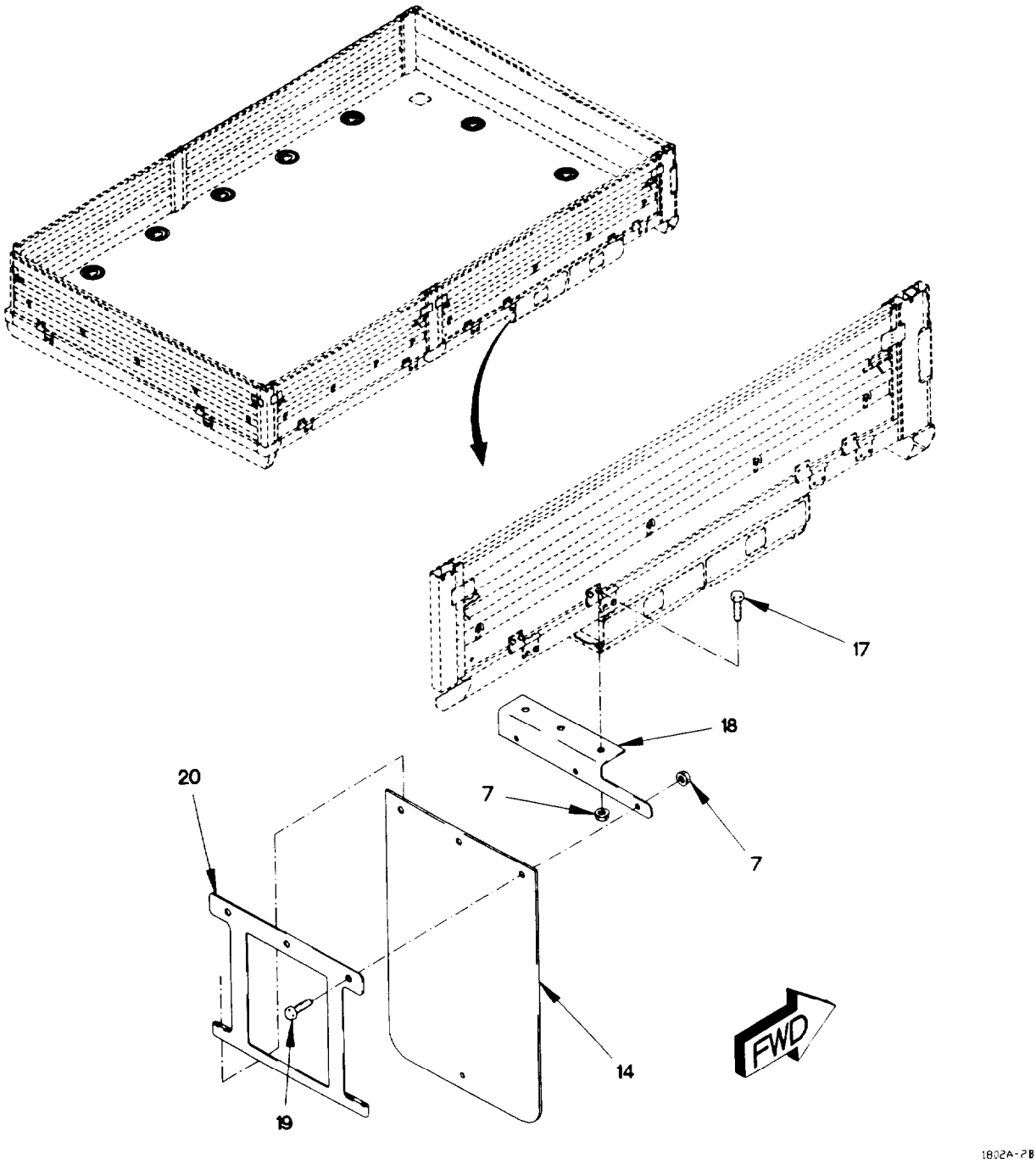

Figure 195. Rear Fenders and Splash Guards (Sheet 2 of 2)

(1) ITEM NO	(2) SMR CODE	(3) FSCM	(4) PART NUMBER	(5) DESCRIPTION AND USABLE ON CODE (UOC)	(6) QTY
				GROUP 1802: FENDERS, RUNNING BOARDS, OUTRIGGERS, WINDSHIELD, GLASS	
				FIG. 195 REAR FENDERS AND SPLASH GUARDS	
1	PAOZZ	19207	12414307-025	BOLT, MACHINE M8 X 1 X 30 UOC: LAB, LAC, LWB, LWC,	4
2	PAOZZ	19207	12414473-014	WASHER, FLAT M10 UOC: LAB, LAC, LWB, LWC,	8
3	PAOZZ	19207	12417958-006	BOLT, MACHINE M8 X 1 X 20 UOC: LAB, LAC, LWB, LWC,	4
4	PAOZZ	19207	12417378	BRACKET, MOUNTING UOC: LAB, LAC, LWB, LWC,	2
5	PAOZZ	4K133	12418476	BUMPER, NONMETALLIC UOC: LAB, LAC, LWB, LWC,	4
6	PAOZZ	0T1J0	12417328	FENDER, VEHICULAR UOC: LAB, LAC, LWB, LWC,	2
7	PAOZZ	19207	12414308-017	NUT, SELF-LOCKING, EX M8 X 1 UOC: LAB, LAC, LWB, LWC,	14
8	PAOZZ	4K133	12419875	INSULATOR, WASHER UOC: LAB, LAC, LWB, LWC,	14
9	PAOZZ	34914	990 3861	WASHER, FLAT M8.4 UOC: LAB, LAC, LWB, LWC,	6
10	PAOZZ	19207	12414474-015	NUT, PLAIN, HEXAGON M10 X 1.5 UOC: LAB, LAC, LWB, LWC,	4
11	PAOZZ	19207	12414474-011	NUT, PLAIN, HEXAGON M8 X 1 UOC: LAB, LAC, LWB, LWC,	10
12	PAOZZ	19207	12417958-007	SCREW, CAP, HEXAGON H M8 X 1.25 X 130 UOC: LAB, LAC, LWB, LWC,	2
13	PAOZZ	19207	12417948-004	SPACER, SLEEVE UOC: LAB, LAC, LWB, LWC,	4
14	PAOZZ	0FW39	12417329	GUARD, SPLASH, VEHICU UOC: LAB, LWB,	4
14	PAOZZ	4K133	12417329-001	GUARD, SPLASH, VEHICU UOC: LAC, LWC,	1
14	PAOZZ	0FW39	12417329	GUARD, SPLASH, VEHICU UOC: LAC, LWC,	3
15	PAOZZ	19207	12414419-128	SCREW, CAP, HEXAGON H M10 X 1.5 X 140 UOC: LAB, LAC, LWB, LWC,	4
16	PAOZZ	19207	12418479-003	BOLT, HOOK UOC: LAB, LAC, LWB, LWC,	2
17	PAOZZ	19207	12414307-023	BOLT, MACHINE M8 X 1 X 20 UOC: LAB, LAC, LWB, LWC,	4
18	PAOZZ	0FW39	12421387-001	BRACKET ANGLE UOC: LAB, LWB,	1
18	PAOZZ	0FW39	12421387-002	BRACKET ANGLE UOC: LAB, LWB,	1

(1) ITEM NO	(2) SMR CODE	(3) FSCM	(4) PART NUMBER	(5) DESCRIPTION AND USABLE ON CODE (UOC)	(6) QTY
18	PAOZZ	19207	12421387-003	BRACKET, ANGLE UOC: LAC, LWC,	1
18	PAOZZ	19207	12421387-004	BRACKET, ANGLE UOC: LAC, LWC,	1
19	PAOZZ	19207	12414307-024	BOLT, MACHINE M8 X 1 X 25 UOC: LAB, LAC, LWB, LWC,	6
20	PAOZZ	19207	12421386	PLATE, MOUNTING UOC: LAB, LWB,	2
20	PAOZZ	19207	12421386-001	PLATE, MOUNTING UOC: LAC, LWC,	1
20	PAOZZ	19207	12421386	PLATE, MOUNTING UOC: LAC, LWC,	1

END OF FIGURE

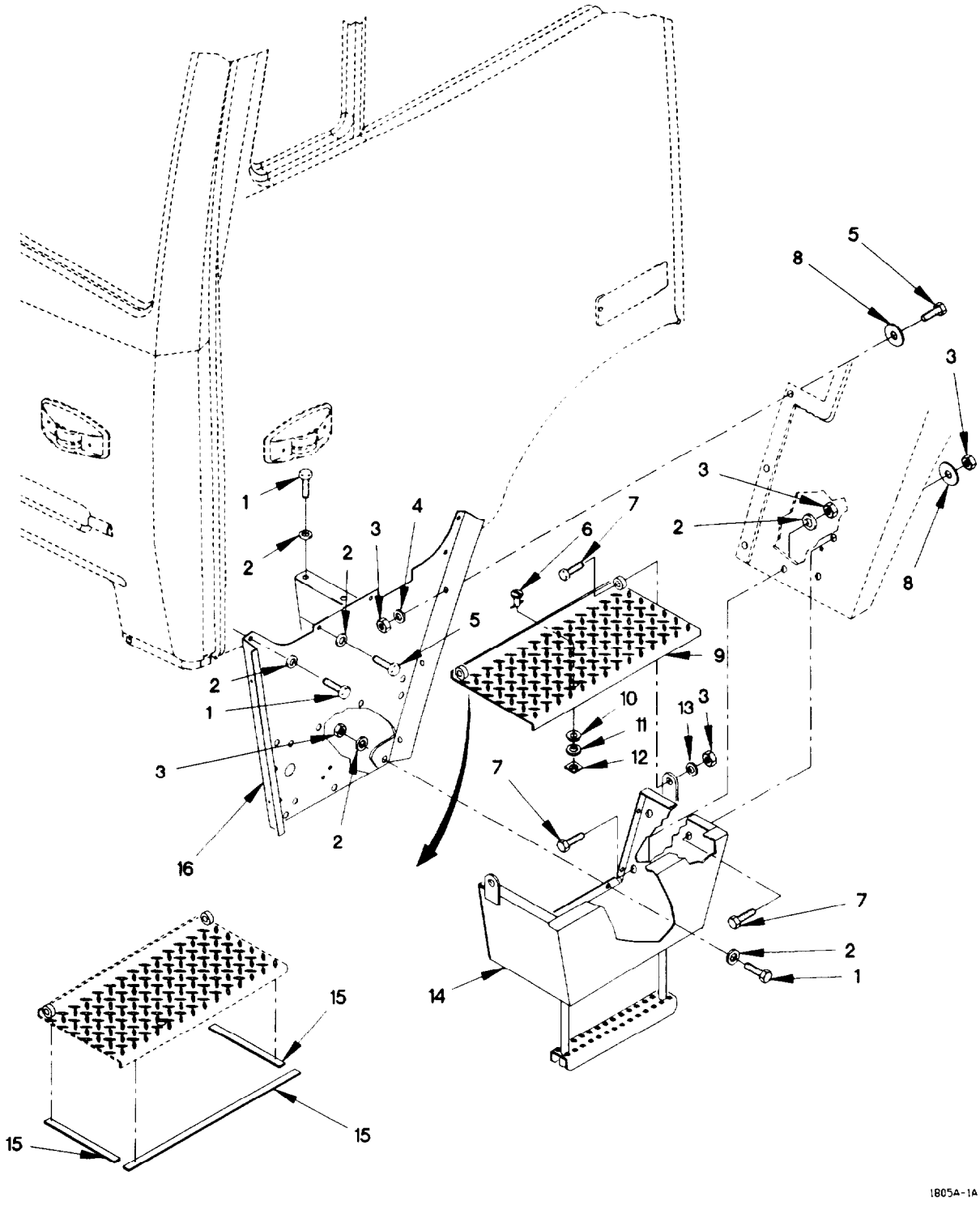

Figure 196. Cab Steps

(1) ITEM NO	(2) SMR CODE	(3) FSCM	(4) PART NUMBER	(5) DESCRIPTION AND USABLE ON CODE (UOC)		(6) QTY
				GROUP 1802: FENDERS, RUNNING BOARDS, OUTRIGGERS, WINDSHIELD, GLASS		
				FIG. 196 CAB STEPS		
1	PAOZZ	15526	933-M8X20	SCREW, CAP, HEXAGON H M8 X 1.25 X 20		23
2	PAOZZ	19207	12417975-008	WASHER, FLAT M8.4		36
3	PAOZZ	19207	12414315-006	NUT, SELF-LOCKING, HE M8 X 1.25		12
4	PAOZZ	0FW39	12414582-004	SPACER, SLEEVE		14
5	PAOZZ	05523	42051-14	SCREW, CAP, HEXAGON H M8 X 1.25 X 14		1
6	PAOZZ	71286	50S10-15-1AA	STUD, TURNLOCK FASTE		2
7	PAOZZ	81495	071 408 32	BOLT, MACHINE M8 X 1.25 X 25		4
8	PAOZZ	19207	12420512	WASHER, FLAT M6		9
9	PAOZZ	0FW39	12417765	TREAD, METALLIC, NONS RIGHT SIDE		1
9	PAOZZ	0FW39	12417766	TREAD, METALLIC, NONS LEFT SIDE		1
10	PAOZZ	71286	50S12-1-1AA	GROMMET, NONMETALLIC		2
11	PAOZZ	19207	12417770	WASHER, SPLIT M6		2
12	PAOZZ	71286	50R4-1-1AA	RECEPTACLE, TURNLOCK		2
13	PAOZZ	34914	990 3861	WASHER, FLAT M8.4		4
14	PAOZZ	19207	12417811	RUNNING BOARD, VEHIC CURB SIDE		1
14	PAOZZ	19207	12417812	RUNNING BOARD, VEHIC ROAD SIDE		1
15	MOOZZ	0MHJ9	CC3350	SEAL, NONMETALLIC ST MAKE FROM SEAL P/N: CC3350 (0MHJ9), CUT TOLENGTH	V	
16	PAOZZ	19207	12419900	BRACKET, MOUNTING LEFT		1
16	PAOZZ	19207	12419901	BRACKET, MOUNTING RIGHT		1

END OF FIGURE

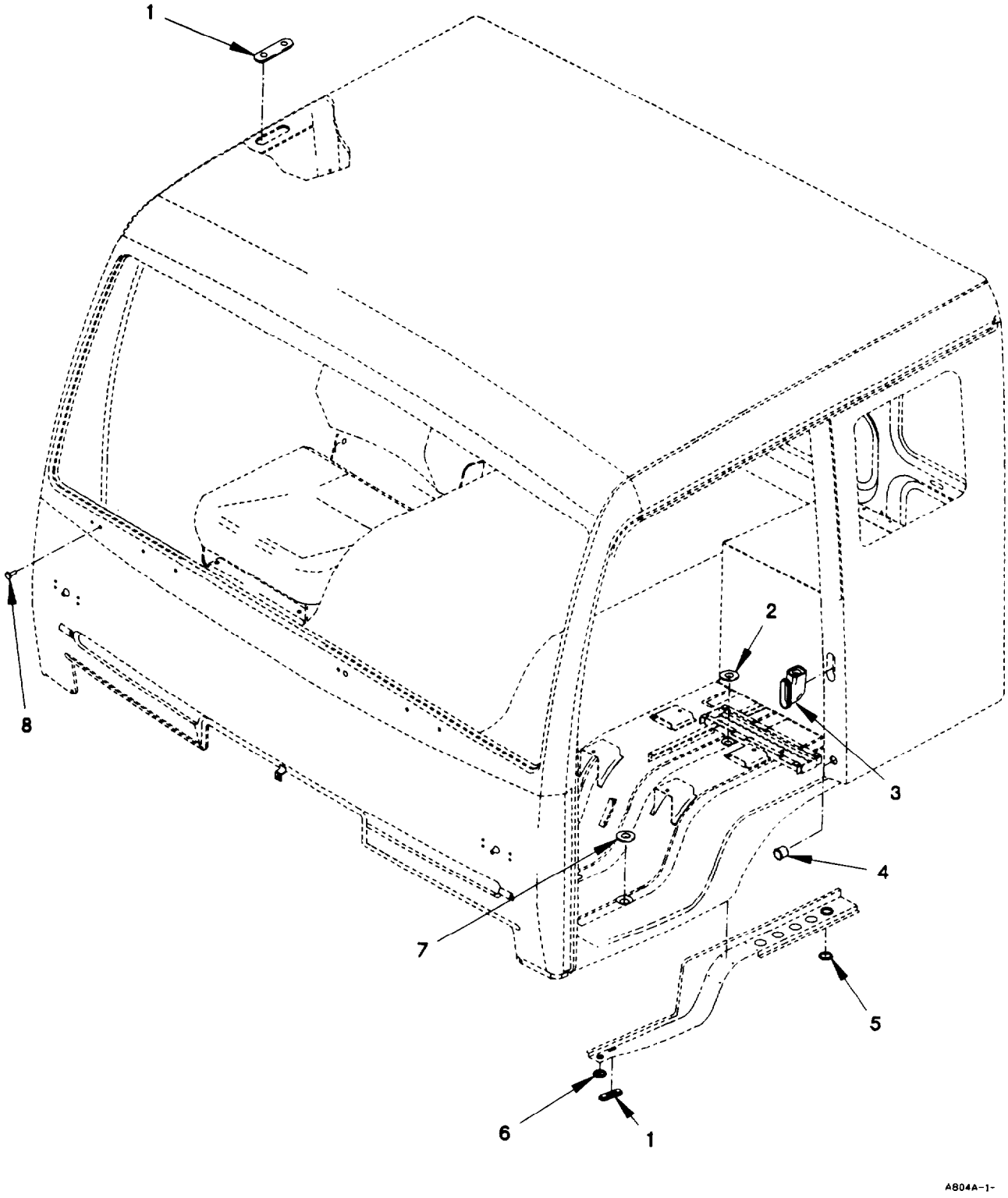

Figure 197. Cab Drain Plugs (Sheet 1 of 2)

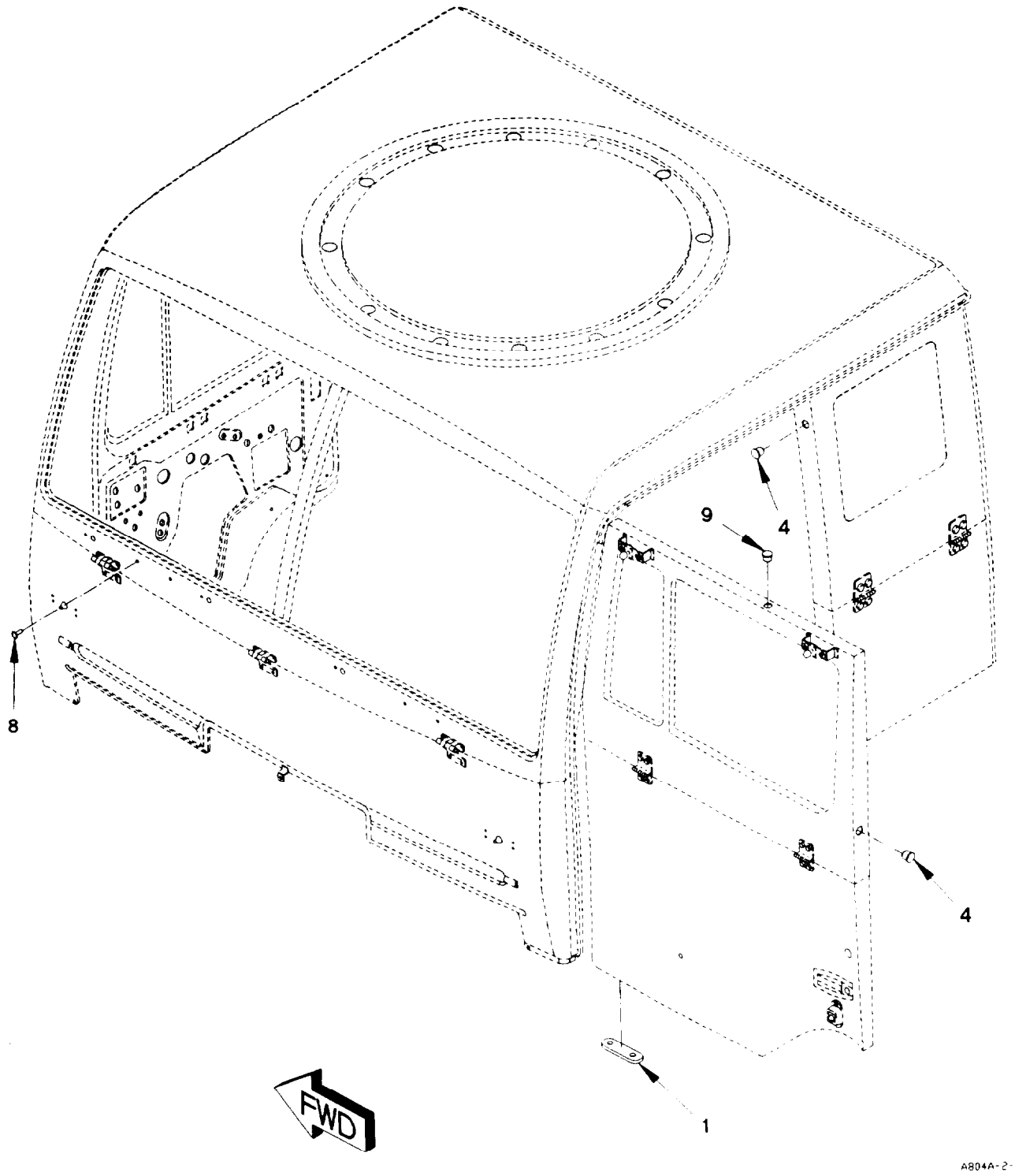

Figure 197. Cab Drain Plugs (Sheet 2 of 2)

(1) ITEM NO	(2) SMR CODE	(3) FSCM	(4) PART NUMBER	(5) DESCRIPTION AND USABLE ON CODE (UOC)	(6) QTY
				GROUP 1804: DRAIN VALVES, DRAIN PLUGS	
				FIG. 197 CAB DRAIN PLUGS	
1	PAOZZ	0FW39	12417526	PLUG, LEAKPROOF SEAL	6
				UOC: LAA, LAB, LAD, LWB, LWD,	
1	PAOZZ	0FW39	12417526	PLUG, LEAKPROOF SEAL	2
				UOC: LAC, LWC,	
2	PAOZZ	0FW39	12417527	PLUG, PROTECTIVE, DUS	6
3	PAOZZ	0FW39	12417562	VALVE, CHECK, CAB VEN	2
4	PAOZZ	19207	12417599	PLUG, PROTECTIVE, DUS	2
				UOC: LAA, LAB, LAD, LWB, LWD,	
4	PAOZZ	19207	12417599	PLUG, PROTECTIVE, DUS	8
				UOC: LAC, LWC,	
5	PAOZZ	19207	12418065-005	PLUG, PIPE	10
				UOC: LAA, LAB, LAD, LWB, LWD,	
6	PAOZZ	19207	12418065-004	PLUG, PIPE	2
7	PAOZZ	19207	12418348	PLUG, PROTECTIVE, DUS	6
8	PAOZZ	19207	12420756	STUD, TRIM, RIBBED	4
9	PAOZZ	23540	411	INSULATOR, PLUG	4
				UOC: LAC, LWC,	
				END OF FIGURE	

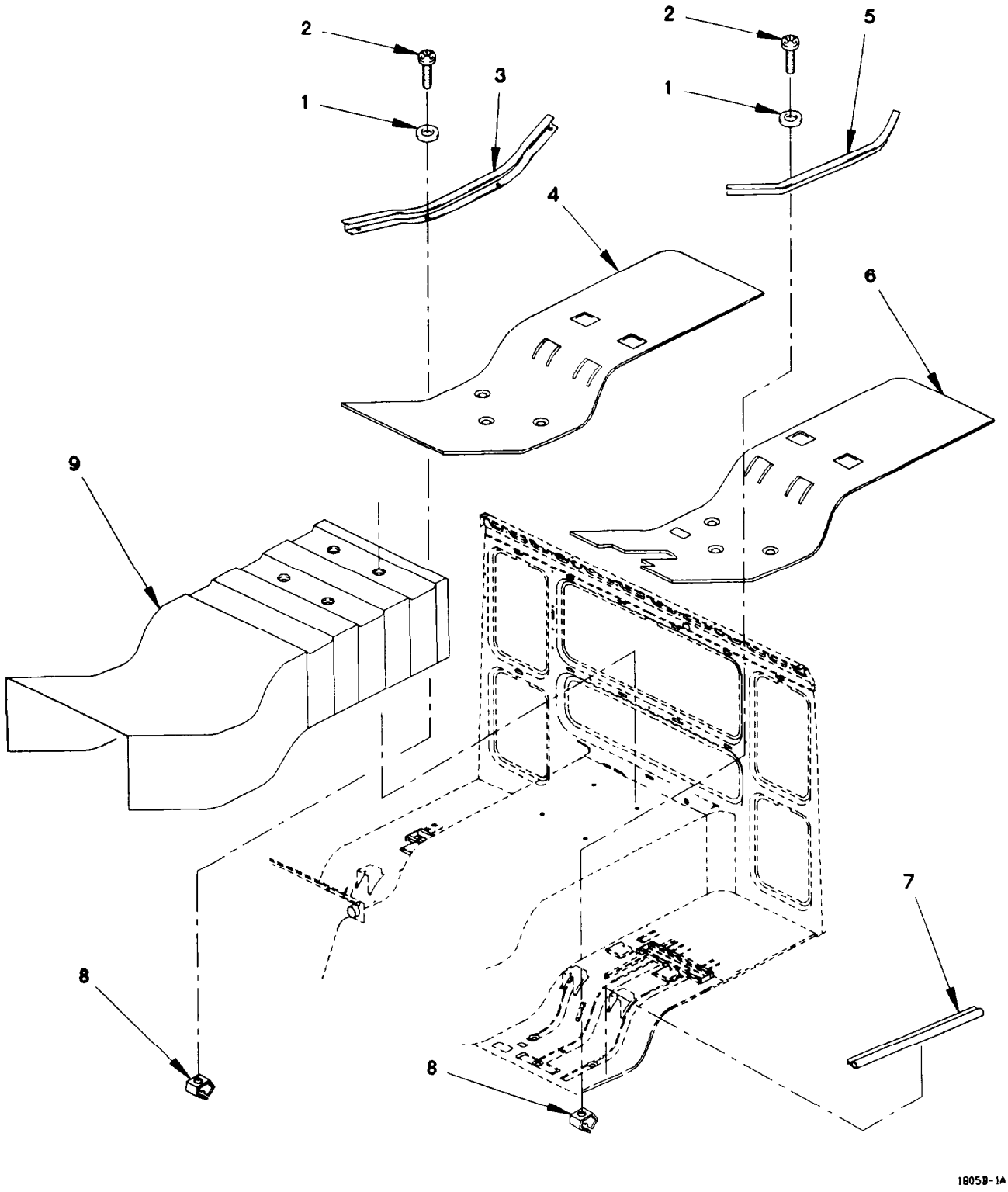

Figure 198. Cab Floor Coverings and Door Seals

(1) ITEM NO	(2) SMR CODE	(3) FSCM	(4) PART NUMBER	(5) DESCRIPTION AND USABLE ON CODE (UOC)	(6) QTY
				GROUP 1805: FLOORS, SUBFLOORS FIG. 198 CAB FLOOR COVERINGS AND DOOR SEALS	
1	PAOZZ	19207	12414473-010	WASHER, FLAT M5.5	8
2	PAOZZ	19207	12414310-046	SCREW, TAPPING M4.8 X 19	8
3	PAOZZ	0FW39	12417486	RUNNING BOARD, VEHIC MOULDING, RIGHT, CAB FLOOR	1
4	PAOZZ	19207	12417830-002	FLOOR, BODY, VEHICULA UOC: LAA, LAB, LAD, LWB, LWD,	1
4	PAOZZ	19207	12417830-004	INSULATION, THERMAL, UOC: LAC, LWC,	1
5	PAOZZ	0FW39	12417487	RUNNING BOARD, VEHIC MOULDING, LEFT, CAB FLOOR	1
6	PAOZZ	19207	12417830-001	FLOOR, BODY, VEHICULA UOC: LAA, LAB, LAD, LWB, LWD,	1
6	PAOZZ	19207	12417830-003	INSULATION, THERMAL, UOC: LAC, LWC,	1
7	PAOZZ	0FW39	12417485	SEAL, NONMETALLIC	2
8	PAOZZ	19207	12419831-001	NUT, SHEET SPRING	8
9	PAOZZ	24825	M-01 383	INSULATION PANEL, VE	1
				END OF FIGURE	

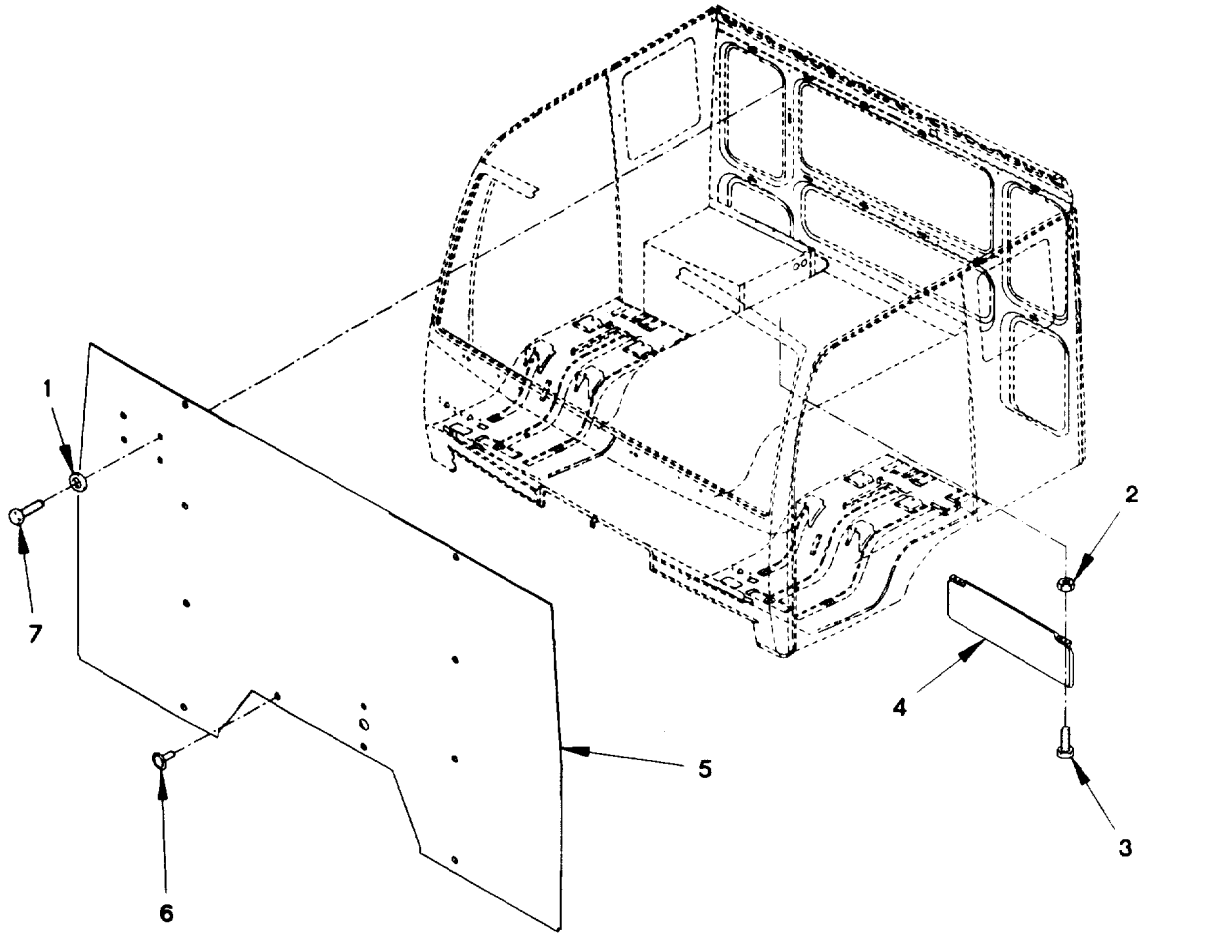

A806A-1-

Figure 199. Standard Cab Liners, Boarding Handles, and Sun Visors (Sheet 1 of 2)

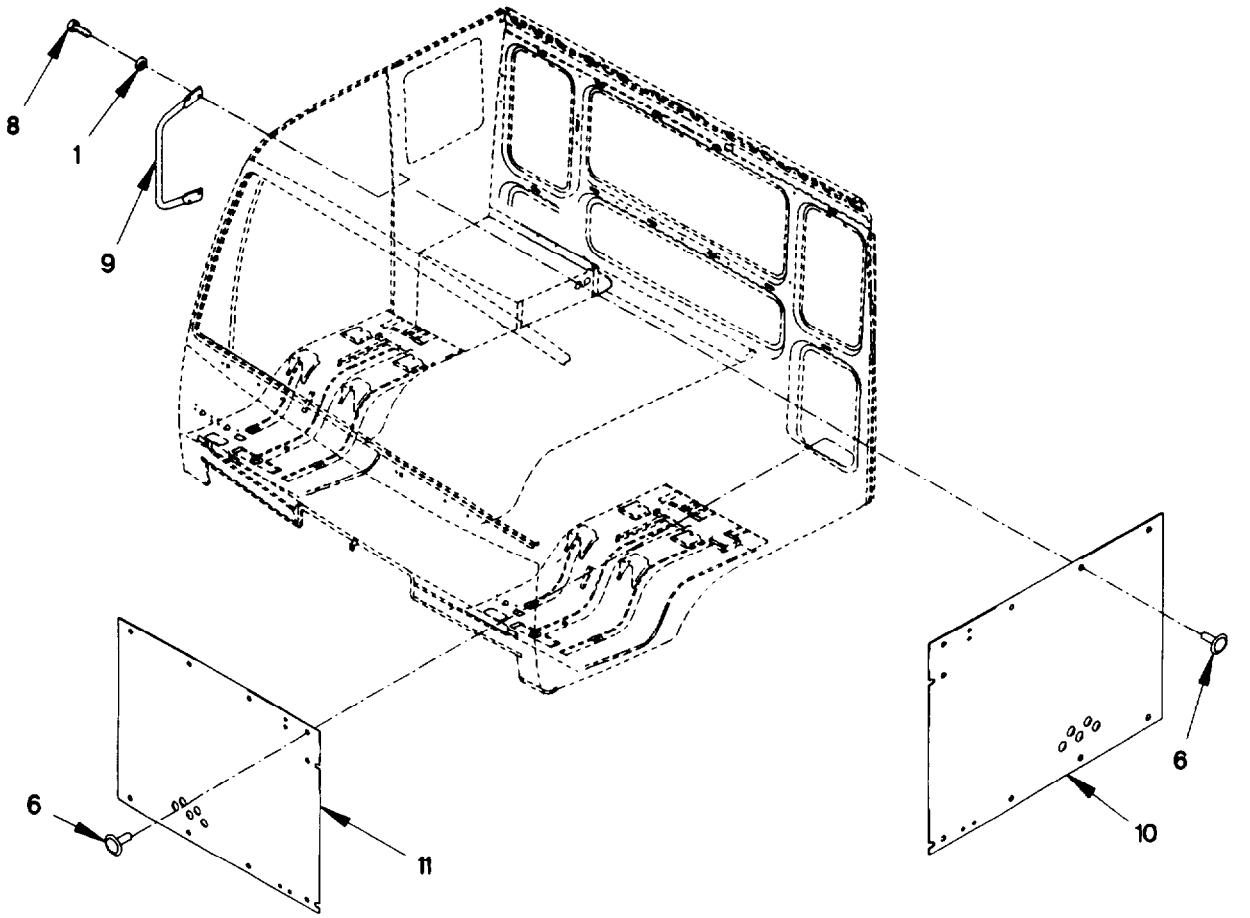

Figure 199. Standard Cab Liners, Boarding Handles, and Sun Visors
(Sheet 2 of 2)

(1) ITEM NO	(2) SMR CODE	(3) FSCM	(4) PART NUMBER	(5) DESCRIPTION AND USABLE ON CODE (UOC)	(6) QTY
				GROUP 1806: UPHOLSTERY SEATS AND CARPETS	
				FIG. 199 STANDARD CAB LINERS, BOARDING HANDLES AND SUN VISORS	
1	PAOZZ	19200	12524631-1	WASHER, FLAT M6	4
2	PAOZZ	19207	12419831-001	NUT, SHEET SPRING	4
				UOC: LAA, LAB, LAD, LWB, LWD,	
3	PAOZZ	19207	12414310-048	SCREW, TAPPING M4.8 X 25	4
				UOC: LAA, LAB, LAD, LWB, LWD,	
4	PAOZZ	0FW39	12417758	VISOR, SUN, VEHICLE	1
5	PAOZZ	0FW39	12418339-001	PANEL, BODY, VEHICULA	1
				UOC: LAA, LAB, LAD, LWB, LWD,	
6	PAOZZ	0FW39	12418469	RIVET, COMPRESSION	25
				UOC: LAA, LAB, LAD, LWB, LWD,	
7	PAOZZ	56161	10503805	SCREW, CAP, HEXAGON H M6 X 1 X 20	4
8	PAOZZ	64678	000933 006058	SCREW, CAP, HEXAGON H M6 X 1 X 25	8
9	PAOZZ	0FW39	12417489	HANDLE, BOW	2
10	PAOZZ	0FW39	12418338	PANEL, BODY, VEHICULA	1
				UOC: LAA, LAB, LAD, LWB, LWD,	
11	PAOZZ	0FW39	12418337	PANEL, BODY, VEHICULA	1
				UOC: LAA, LAB, LAD, LWB, LWD,	
				END OF FIGURE	

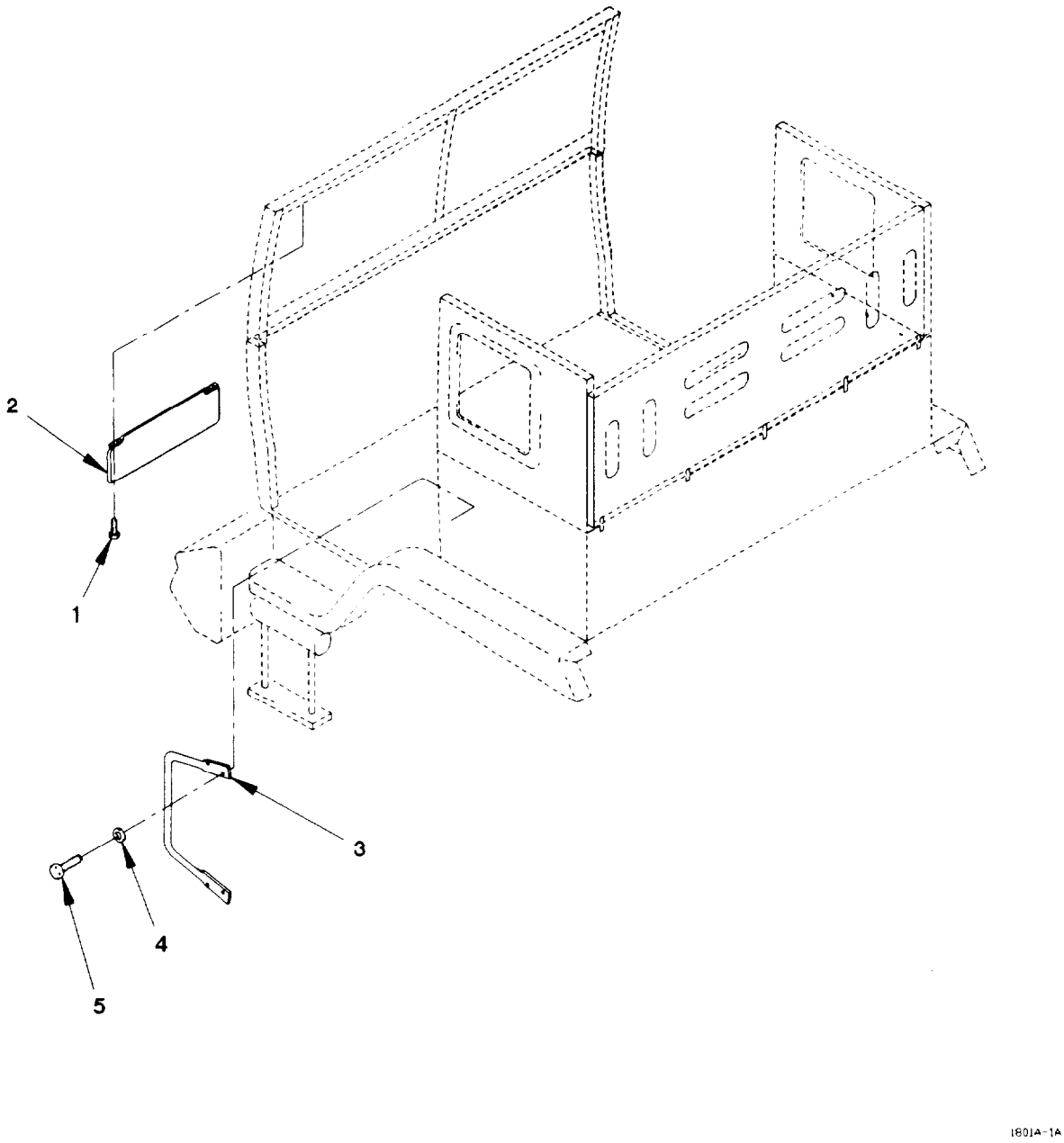

Figure 200. Air Drop Panels, Visors, and Boarding Handles
(Sheet 1 of 3)

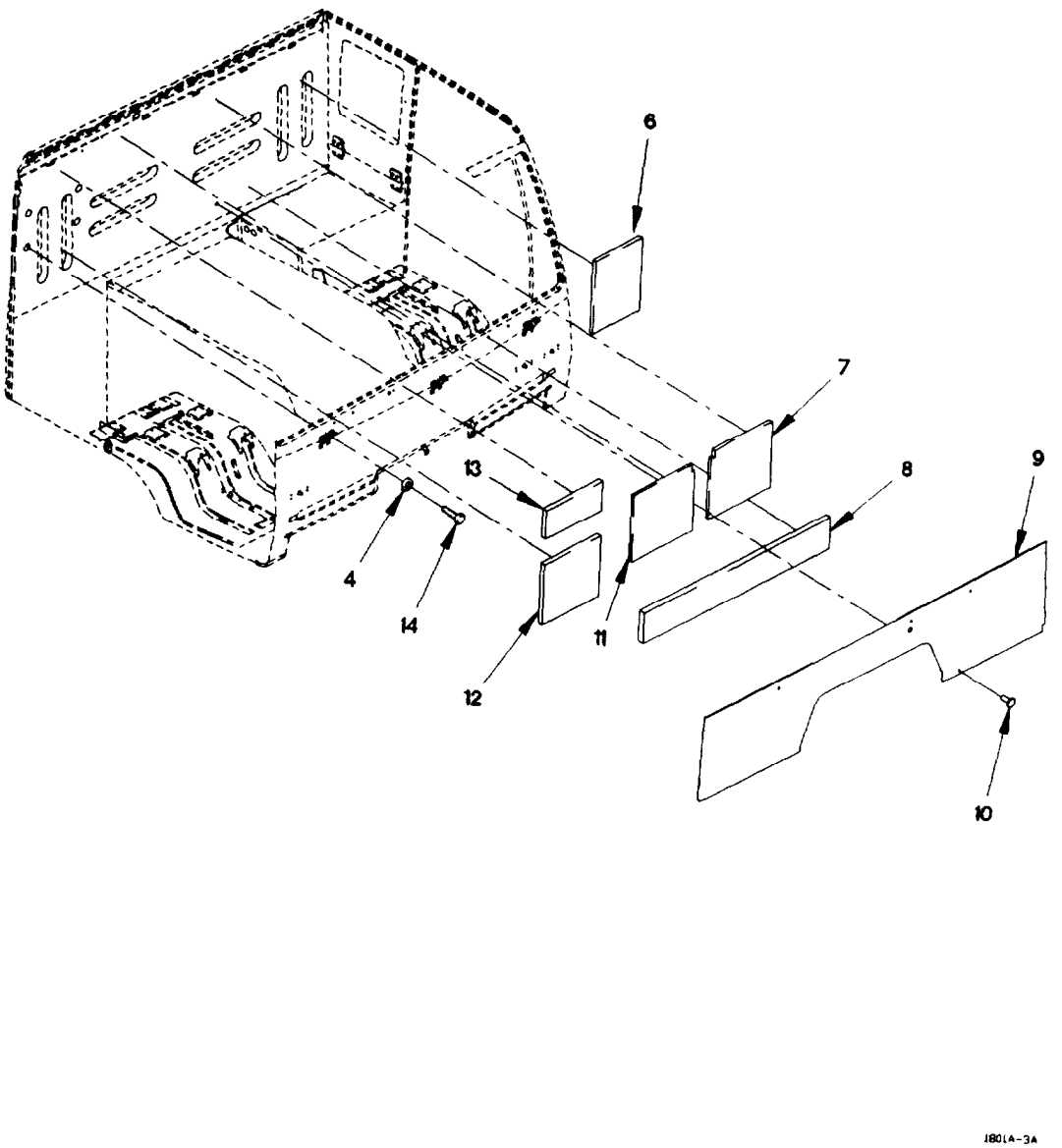

Figure 200. Air Drop Panels, Visors, and Boarding Handles
(Sheet 2 of 3)

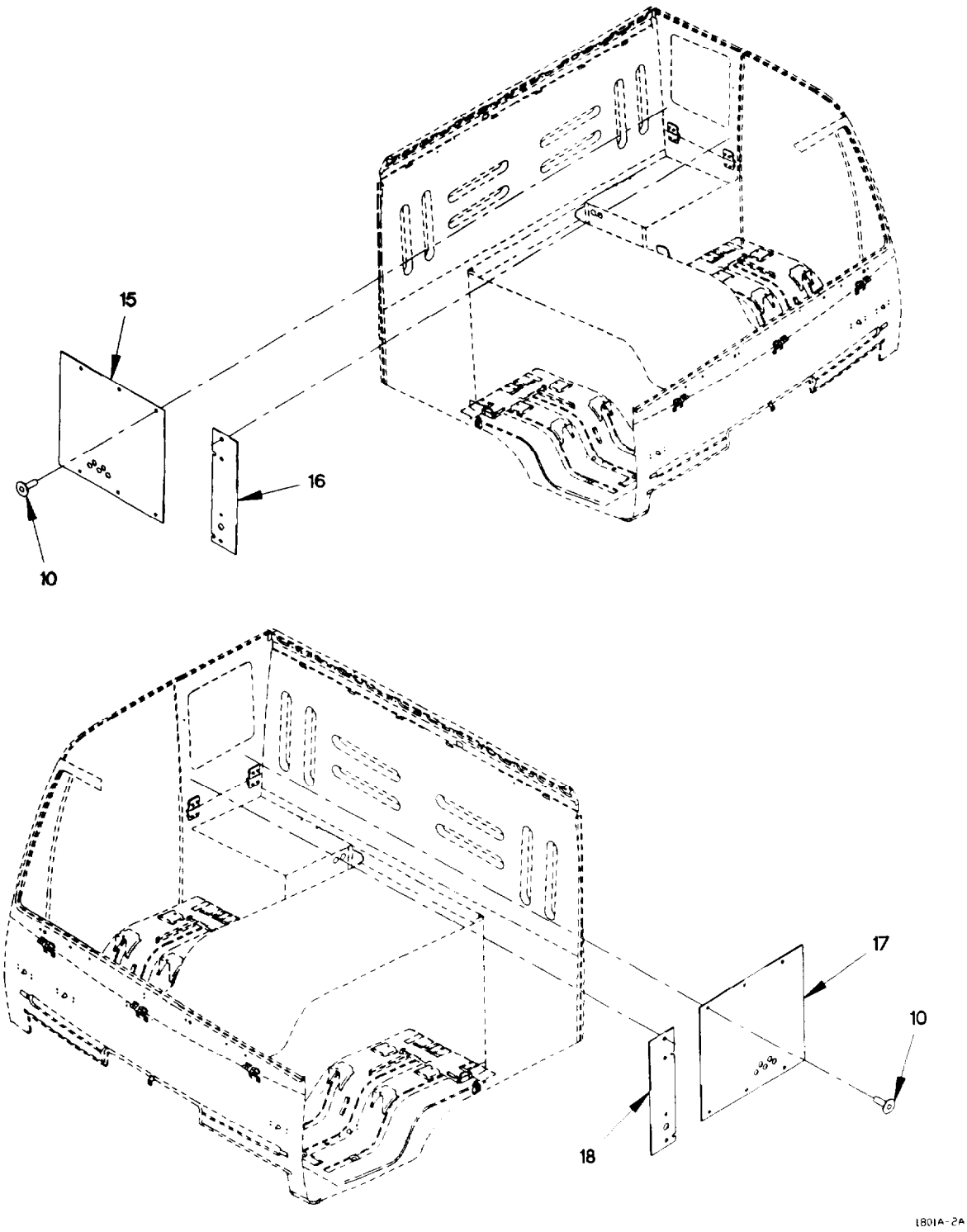

Figure 200. Air Drop Panels, Visors, and Boarding Handles
(Sheet 3 of 3)

(1) ITEM NO	(2) SMR CODE	(3) FSCM	(4) PART NUMBER	(5) DESCRIPTION AND USABLE ON CODE (UOC)	(6) QTY
				GROUP 1806: UPHOLSTERY SEATS AND CARPETS	
				FIG. 200 AIR DROP PANELS, VISORS AND BOARDING HANDLES	
1	PAOZZ	19207	12414575-047	SCREW, MACHINE M5 X 12 X 4 UOC: LAC, LWC,	4
2	PAOZZ	0FW39	12417758	VISOR, SUN, VEHICLE	1
3	PAOZZ	0FW39	12417489	HANDLE, BOW	2
4	PAOZZ	19200	12524631-1	WASHER, FLAT M6 UOC: LAC, LWC,	4
5	PAOZZ	64678	000933 006058	SCREW, CAP, HEXAGON H M6 X 1 X 25	8
6	PAOZZ	24825	V-100-12418384-0 01	PANEL, BODY, VEHICULA UOC: LAC, LWC,	1
7	PAOZZ	19207	12418384-007	PANEL, BODY, VEHICULA UOC: LAC, LWC,	1
8	PAOZZ	19207	12418384-004	PANEL, BODY, VEHICULA UOC: LAC, LWC,	1
9	PAOZZ	0FW39	12418383	PANEL, INTERIOR, VEHI UOC: LAC, LWC,	1
10	PAOZZ	0FW39	12418469	RIVET, COMPRESSION UOC: LAC, LWC,	18
11	PAOZZ	19207	12418384-008	PANEL, BODY, VEHICULA UOC: LAC, LWC,	1
12	PAOZZ	19207	12418384-005	INSULATION PANEL, VE UOC: LAC, LWC,	1
13	PAOZZ	19207	12418384-006	INSULATION PANEL, VE UOC: LAC, LWC,	1
14	PAOZZ	56161	10503805	SCREW, CAP, HEXAGON H M6 X 1 X 20 UOC: LAC, LWC,	4
15	PAOZZ	19207	12418380	PANEL, BODY, VEHICULA UOC: LAC, LWC,	1
16	PAOZZ	0FW39	12418382	PANEL, INTERIOR, VEHI UOC: LAC, LWC,	1
17	PAOZZ	0FW39	12418379	PANEL, BODY, VEHICULA UOC: LAC, LWC,	1
18	PAOZZ	0FW39	12418381	PANEL, INTERIOR, VEHI UOC: LAC, LWC,	1
				END OF FIGURE	

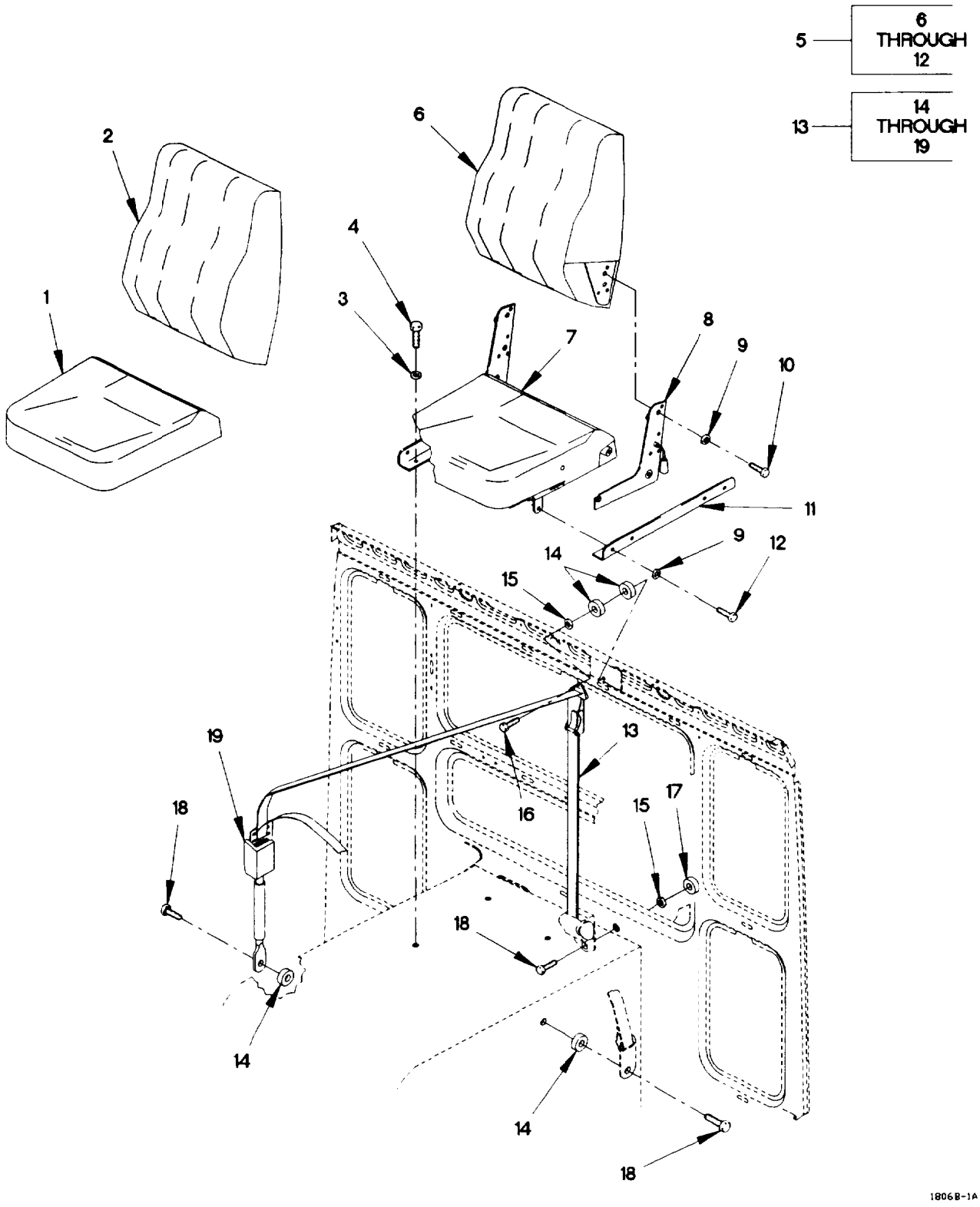

Figure 201. Center Seat and Seat Belt

(1) ITEM NO	(2) SMR CODE	(3) FSCM	(4) PART NUMBER	(5) DESCRIPTION AND USABLE ON CODE (UOC)	(6) QTY
				GROUP 1806: UPHOLSTERY SEATS AND CARPETS	
				FIG. 201 CENTER SEAT AND SEAT BELT	
1	PAOZZ	27797	WM1059	COVER, SEAT USE WITH SEAT P/N: 8.5947 AND 8.5948	1
2	PAOZZ	27797	WM1058	COVER, BACK USE ON P/N: 8.5947 AND 8.5948	1
3	PAOZZ	34914	990 3861	WASHER, FLAT M8.4	4
4	PAOZZ	15526	933-M8X20	SCREW, CAP, HEXAGON H M8 X 1.25 X 20	4
5	PAOOO	62226	8.5947	SEAT, VEHICULAR UOC: LAA, LAB, LAD, LWB, LWD,	1
5	PAOOO	62226	8.5948	SEAT, VEHICULAR UOC: LAC, LWC,	1
6	PAOZZ	27797	MM6542L	.FRAME, BACK, SEAT, USE WITH SEAT P/N: WM920 UOC: LAC, LWC,	1
6	PAOZZ	27797	MM6566	.FRAME, BACK, SEAT USE ON WM921 UOC: LAA, LAB, LAD, LWB, LWD,	1
7	PAOZZ	27797	MM6515	.FRAME, SEAT, CENTER USE ON WM920 AND WM921	1
8	PAOZZ	27797	MM6538	.HINGE, SEAT, CENTER USE ON WM921 UOC: LAA, LAB, LAD, LWB, LWD,	2
8	PAOZZ	27797	MM6558R	.HINGE, SEAT ASSEMBLY USE WITH SEAT P/N: WM920 UOC: LAC, LWC,	1
8	PAOZZ	27797	MM6686L	.HINGE, SEAT, ASSEMBLY USE WITH SEAT P/N: WM920 UOC: LAC, LWC,	1
9	PAOZZ	27797	XP6569	.WASHER, FLAT #8 USE WITH SEAT P/N: WM921 UOC: LAA, LAB, LAD, LWB, LWD,	12
9	PAOZZ	27797	XP6569	.WASHER, FLAT #8 USE WITH SEAT P/N: WM920 UOC: LAC, LWC,	10
10	PAOZZ	27797	XP6560	.BOLT, HEXAGON HEAD 1.25 X 16M, USE WITH SEAT P/N: WM920 AND WM921	8
11	PAOZZ	27797	MM6564	.ANGLE, SEAT, ASSEMBLY USE ON WM920 AND WM921	1
12	PAOZZ	27797	MM6561	.BOLT, HEXAGON HEAD 1.25 X 35M, USE WITH SEAT P/N: WM921 UOC: LAA, LAB, LAD, LWB, LWD,	4
12	PAOZZ	27797	XP6561	.BOLT, HEXAGON HEAD 1.25 X 35M, USE WITH SEAT P/N: WM920 UOC: LAC, LWC,	2
13	PAOZZ	29944	F10852	BELT, VEHICULAR SAFE CENTER	1
14	XAOZZ	29944	00041	.SPACER, SLEEVE	4

(1) ITEM NO	(2) SMR CODE	(3) FSCM	(4) PART NUMBER	(5) DESCRIPTION AND USABLE ON CODE (UOC)	(6) QTY
15	XAOZZ	29944	14219	.WASHER, FLAT	2
16	XAOZZ	29944	14117	.SCREW, SHOULDER	1
17	XAOZZ	29944	14134	.SPACER, RING	1
18	XAOZZ	29944	10767	.SCREW, CAP, HEXAGON H	3
19	XAOZZ	29944	A34438	.BELT, VEHICULAR SAFE	1

END OF FIGURE

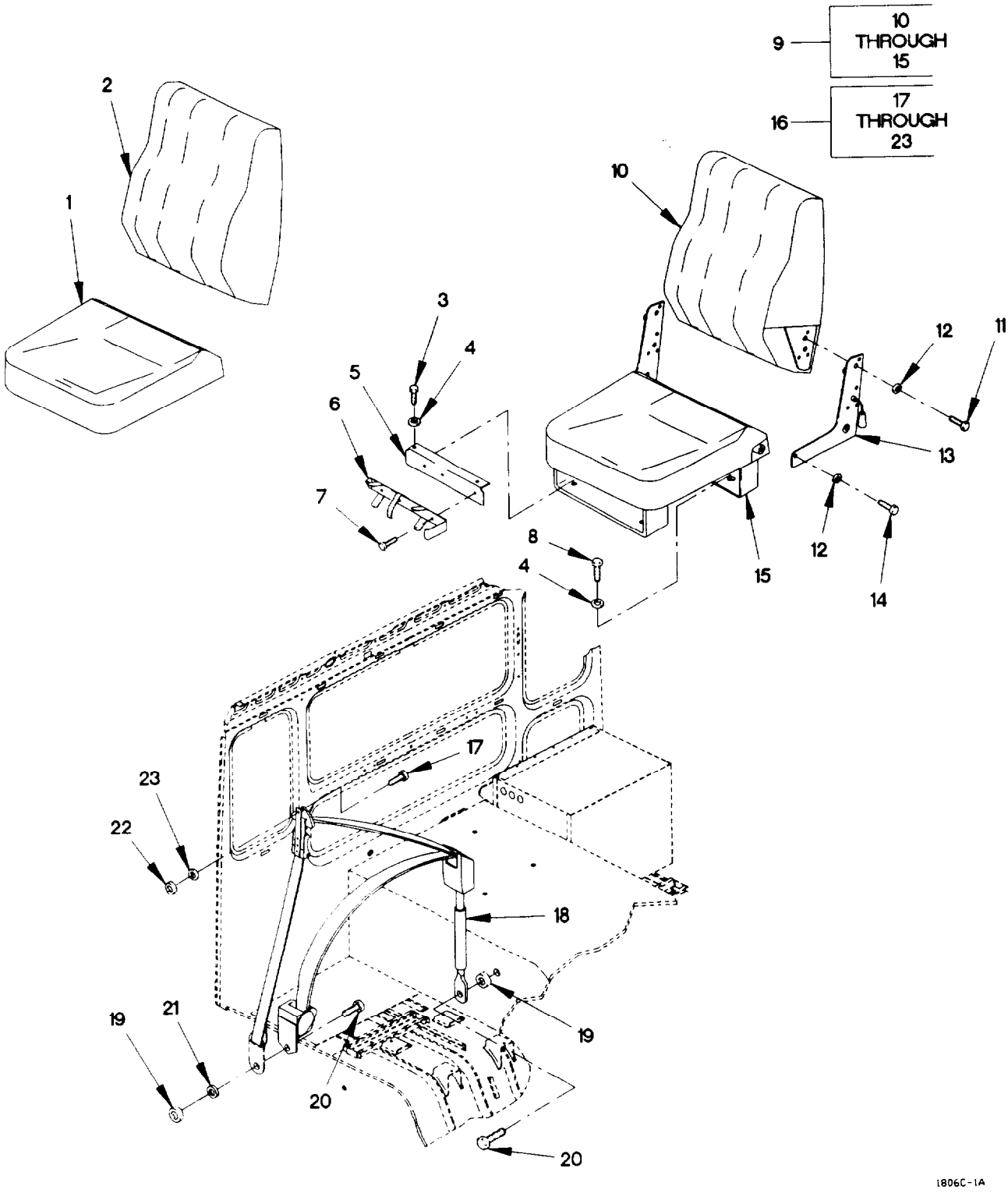

Figure 202. Passenger Seat and Seat Belt

(1) ITEM NO	(2) SMR CODE	(3) FSCM	(4) PART NUMBER	(5) DESCRIPTION AND USABLE ON CODE (UOC)	(6) QTY
				GROUP 1806: UPHOLSTERY SEATS AND CARPETS	
				FIG. 202 PASSENGER SEAT AND SEAT BELT	
1	PAOZZ	27797	WM1059	COVER, SEAT USE WITH SEAT P/N: 8.5745	1
2	PAOZZ	27797	WM1058	COVER, BACK USE ON 8.5745	1
3	PAOZZ	15526	933-M8X20	SCREW, CAP, HEXAGON H M8 X 1.25 X 20	2
4	PAOZZ	34914	990 3861	WASHER, FLAT M8.4	4
5	PAOZZ	19207	12418370	SUPPORT, FIRE EXTING	1
6	PAOZZ	54905	861H	BRACKET ASSY, MTG	1
7	PAOZZ	15526	DIN933-M6X16-8.8 -A4C	SCREW, CAP, HEXAGON H M6 X 1 X 16	3
8	PAOZZ	15434	C0718103500	SCREW, CAP, HEXAGON H M8 X 1.25 X 16	2
9	PAOOO	62226	8.5745	SEAT, VEHICULAR PASSENGER SEAT	1
10	PAOZZ	27797	MM6542R	.FRAME, BACK, PASSENGE USE WITH SEAT P/N: WM919	1
11	PAOZZ	27797	XP6560	.BOLT, HEXAGON HEAD 1.25 X 16M, USE WITH SEAT P/N: WM919	4
12	PAOZZ	27797	XP6569	.WASHER, FLAT #8, USE WITH SEAT P/N: WM919	6
13	PAOZZ	27797	MM6558L	.HINGE, SEAT ASSEMBLY USE WITH SEAT P/N: WM919	1
13	PAOZZ	27797	MM6686R	.HINGE, SEAT ASSEMBLY USE WITH SEAT WM919	1
14	PAOZZ	27797	XP6561	.BOLT, HEXAGON HEAD 1.25 X 35M, USE WITH SEAT P/N: WM919	2
15	PAOZZ	27797	MM6511	.FRAME, BACK, PASSENGE USE WITH SEAT P/N: WM919	1
16	PAOZZ	29944	F08568	BELT, VEHICULAR SAFE	1
17	XAOZZ	29944	14155	.SCREW, CAP, HEXAGON H 7/16-20 X 1 1/16	1
18	XAOZZ	29944	A34438	.BELT, VEHICULAR SAFE	1
19	XAOZZ	29944	14134	.SPACER, RING	1
20	XAOZZ	29944	10767	.SCREW, CAP, HEXAGON H	2
21	XAOZZ	29944	10113	.WASHER, FLAT 5/16	1
22	XAOZZ	29944	00041	.SPACER, SLEEVE	2
23	XAOZZ	29944	14219	.WASHER, FLAT	1

END OF FIGURE

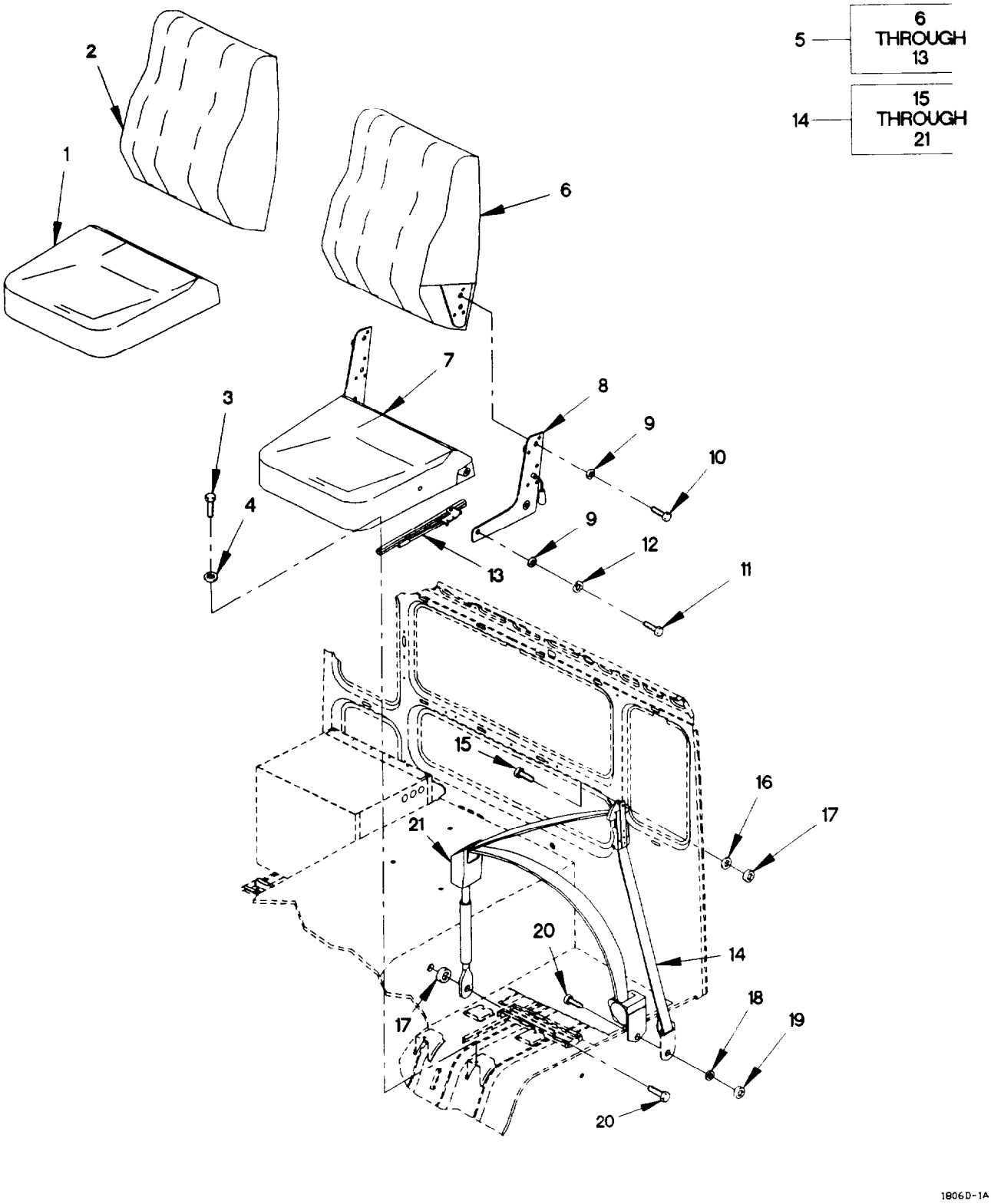

Figure 203. Driver Seat and Seat Belt

(1) ITEM NO	(2) SMR CODE	(3) FSCM	(4) PART NUMBER	(5) DESCRIPTION AND USABLE ON CODE (UOC)	(6) QTY
				GROUP 1806: UPHOLSTERY SEATS AND CARPETS	
				FIG. 203 DRIVER SEAT AND SEAT BELT	
1	PAOZZ	27797	WM1059	COVER, SEAT USE WITH SEAT P/N: 8.5744	1
2	PAOZZ	27797	WM1058	COVER, BACK USE WITH SEAT P/N: 8.5744	1
3	PAOZZ	15434	C0718103500	SCREW, CAP, HEXAGON H M8 X 1.25 X 16	4
4	PAOZZ	34914	990 3861	WASHER, FLAT M8.4	4
5	PAOOO	62266	8.5744	SEAT, VEHICULAR DRIVERS SEAT	1
6	PAOZZ	27797	MM6542L	.FRAME, BACK, SEAT, USE WITH SEAT P/N: WM918	1
7	PAOZZ	27797	MM6513	.FRAME, SEAT, DRIVER USE WITH SEAT P/N: WM918	1
8	PAOZZ	27797	MM6558R	.HINGE, SEAT ASSEMBLY USE WITH SEAT P/N: WM918	1
8	PAOZZ	27797	MM6686L	.HINGE, SEAT ASSEMBLY USE WITH SEAT P/N: WM918	1
9	PAOZZ	27797	XP6569	.WASHER, FLAT #8, USE WITH SEAT P/N: WM918	6
10	PAOZZ	27797	XP6560	.BOLT, HEXAGON HEAD 1.25 X 16M, USE WITH SEAT P/N: WM918	8
11	PAOZZ	27797	XP6561	.BOLT, HEXAGON HEAD 1.25 X 35M, USE WITH SEAT P/N: WM918	2
12	PAOZZ	27797	XP1113	.WASHER, LOCK USE WITH SEAT P/N: WM918	4
13	PAOZZ	27797	MM6465	.ADJUSTER, SEAT, DRIVE USE WITH SEAT P/N: WM918	1
14	PAOZZ	29944	F08569	BELT, VEHICULAR SAFE	1
15	PAOZZ	29944	14155	.SCREW, CAP, HEXAGON H 7/16-20 X 1 1/16	1
16	PAOZZ	29944	14219	.WASHER, FLAT	1
17	XAOZZ	29944	00041	.SPACER, SLEEVE	2
18	XAOZZ	29944	10113	.WASHER, FLAT 5/16	1
19	PAOZZ	29944	14134	.SPACER, RING	1
20	PAOZZ	29944	10767	.SCREW, CAP, HEXAGON H	2
21	PAOZZ	29944	A34438	.BELT, VEHICULAR SAFE	1
				END OF FIGURE	

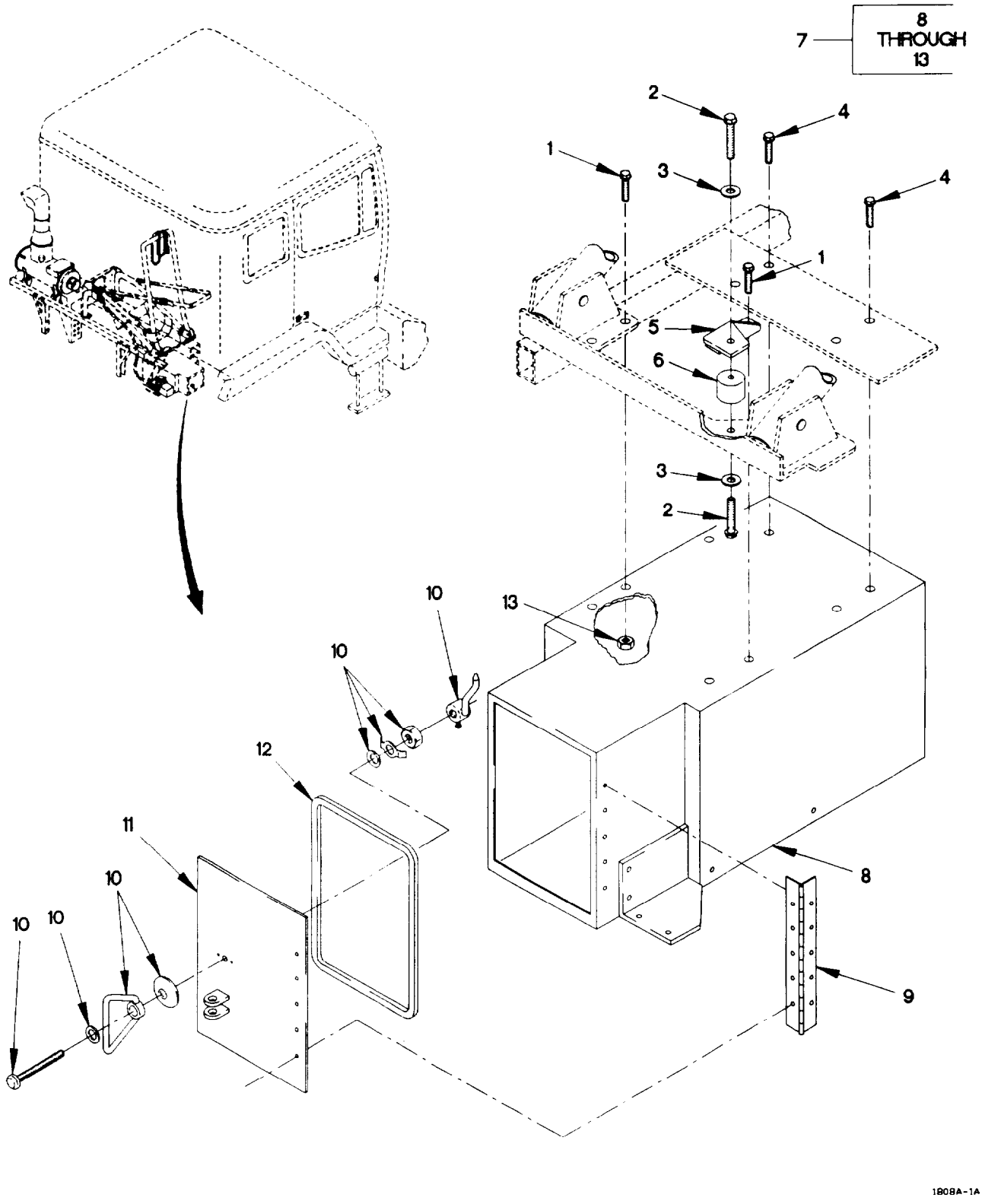

Figure 204. Tool Box

(1) ITEM NO	(2) SMR CODE	(3) FSCM	(4) PART NUMBER	(5) DESCRIPTION AND USABLE ON CODE (UOC)		(6) QTY
				GROUP 1808: STOWAGE RACKS, BOXES, STRAPS, CARRYING CASE		
				FIG. 204 TOOL BOX		
1	PAOZZ	19207	12414307-037	BOLT, MACHINE M8 X 1.25 X 25		4
2	PAOZZ	56161	10503777	SCREW, CAP, HEXAGON H M10 X 1.5 X 16.0		2
3	PAOZZ	19207	12414473-014	WASHER, FLAT M10		2
4	PAOZZ	19207	12414307-039	SCREW, CAP, HEXAGON H M8 X 1.25 X 35		4
5	PAOZZ	19207	12419267	BRACKET, DOUBLE ANGL		1
6	PAOZZ	81860	25922	MOUNT, RESILIENT		1
7	PAOOO	19207	12420802	BOX, ACCESSORIES STO		1
8	XAOOO	19207	12420702	.TOOL BOX		1
9	PAOZZ	80244	AA55592-16D	.HINGE, BUTT		1
9	PAOZZ	0FW39	12420702-010	.HINGE, BUTT		1
10	PAOZZ	94222	68-99-216N	.LATCH, BAIL HEAD		1
11	PAOZZ	19207	12420702-011	.DOOR		1
12	MOOZZ	0MHJ9	CC3350	.SEAL, NONMETALLIC ST MAKE FROM SEAL P/N: CC3350 (0MHJ9), CUT TOLENGTH	V	
13	PAOZZ	19207	12414308-018	NUT, SELF-LOCKING, EX M8 X 1.25		8
				END OF FIGURE		

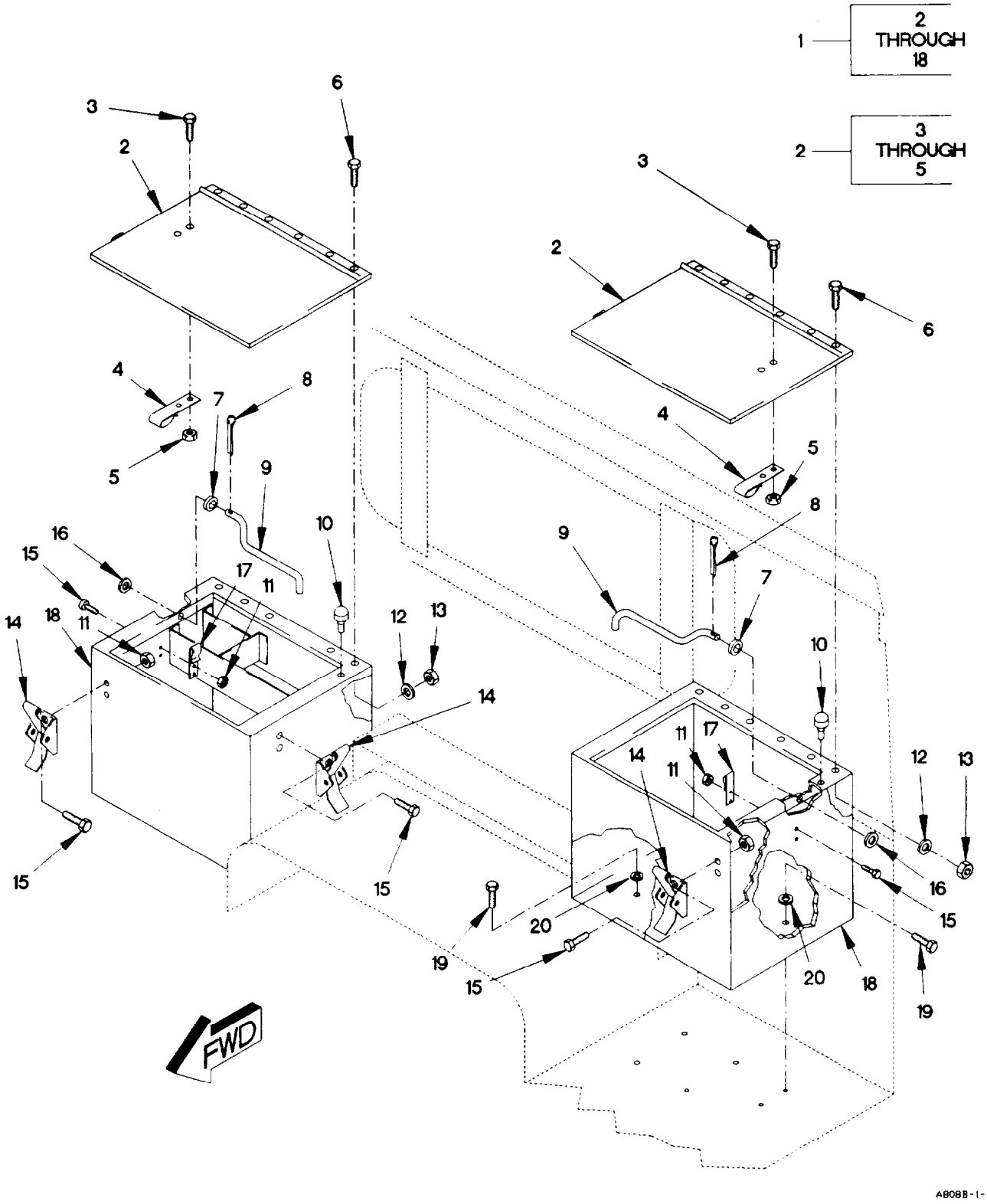

Figure 205. Cab Storage Box Assembly

(1) ITEM NO	(2) SMR CODE	(3) FSCM	(4) PART NUMBER	(5) DESCRIPTION AND USABLE ON CODE (UOC)	(6) QTY
				GROUP 1808: STOWAGE RACKS, BOXES, STRAPS, CARRYING CASE	
				FIG. 205 CAB STORAGE BOX ASSEMBLY	
1	PAOOO	19207	12418329	BOX, ACCESSORIES STO	1
				UOC: LAA, LAB, LAD, LWB, LWD,	
1	PAOOO	19207	12418329-001	BOX, ACCESSORIES STO	1
				UOC: LAC, LWC,	
1	PAOOO	19207	12418330	BOX, ACCESSORIES STO	1
				UOC: LAA, LAB, LAD, LWB, LWD,	
1	PAOOO	19207	12418330-001	BOX, ACCESSORIES STO	1
				UOC: LAC, LWC,	
2	PAOOO	19207	12418359-001	.DOOR, ACCESS PASSENGER SIDE	1
				UOC: LAA, LAB, LAD, LWB, LWD,	
2	PAOOO	19207	12418359-002	.DOOR, ACCESS DRIVER SIDE	1
				UOC: LAA, LAB, LAD, LWB, LWD,	
2	PAOOO	19207	12418359-009	.DOOR, ACCESS PASSENGER SIDE	1
				UOC: LAC, LWC,	
2	PAOOO	19207	12418359-010	.DOOR, ACCESS DRIVER SIDE	1
				UOC: LAC, LWC,	
3	PAOZZ	19207	12414419-039	. .SCREW, CAP, HEXAGON H M4 X .7 X 8	2
4	PAOZZ	19207	12418359-006	. .CLIP, SPRING TENSION	1
5	PAOZZ	19207	12414474-008	. .NUT, PLAIN, HEXAGON M4 X .7	2
6	PAOZZ	15526	933-M6X12	.SCREW, CAP, HEXAGON H M6 X 1 X 12	6
7	PAOZZ	96906	MS35489-6	.GROMMET, NONMETALLIC	1
8	PAOZZ	96906	MS24665-69	.PIN, COTTER	1
9	PAOZZ	19207	12418371	.BRACKET, DOUBLE ANGL	1
10	PAOZZ	0FW39	12419182	.BUMPER, NONMETALLIC	12
11	PAOZZ	19207	12414474-008	.NUT, PLAIN, HEXAGON M4 X .7	4
12	PAOZZ	19207	12417975-006	.SPACER, RING	6
13	PAOZZ	19207	12414474-010	.NUT, PLAIN, HEXAGON M6 X 1.0	6
14	PAOZZ	94222	97-50-330-12	.CATCH, CLAMPING	2
15	PAOZZ	19207	12414419-039	.SCREW, CAP, HEXAGON H M4 X .7 X 8	4
16	PAOZZ	96906	MS27183-10	.WASHER, FLAT 9/32	2
17	PAOZZ	19207	12418359-006	.CLIP, SPRING TENSION	2
18	XAOZZ	19207	12418357	.BOX, RH, ACCESS, STOWA	1
18	XAOZZ	19207	12418358	.BOX, LH, ACCESS, STOWA	1
19	PAOZZ	15526	DIN933-M6X16-8.8 -A4C	SCREW, CAP, HEXAGON H M6 X 1 X 16	12
20	PAOZZ	19207	12417975-006	SPACER, RING	12

END OF FIGURE

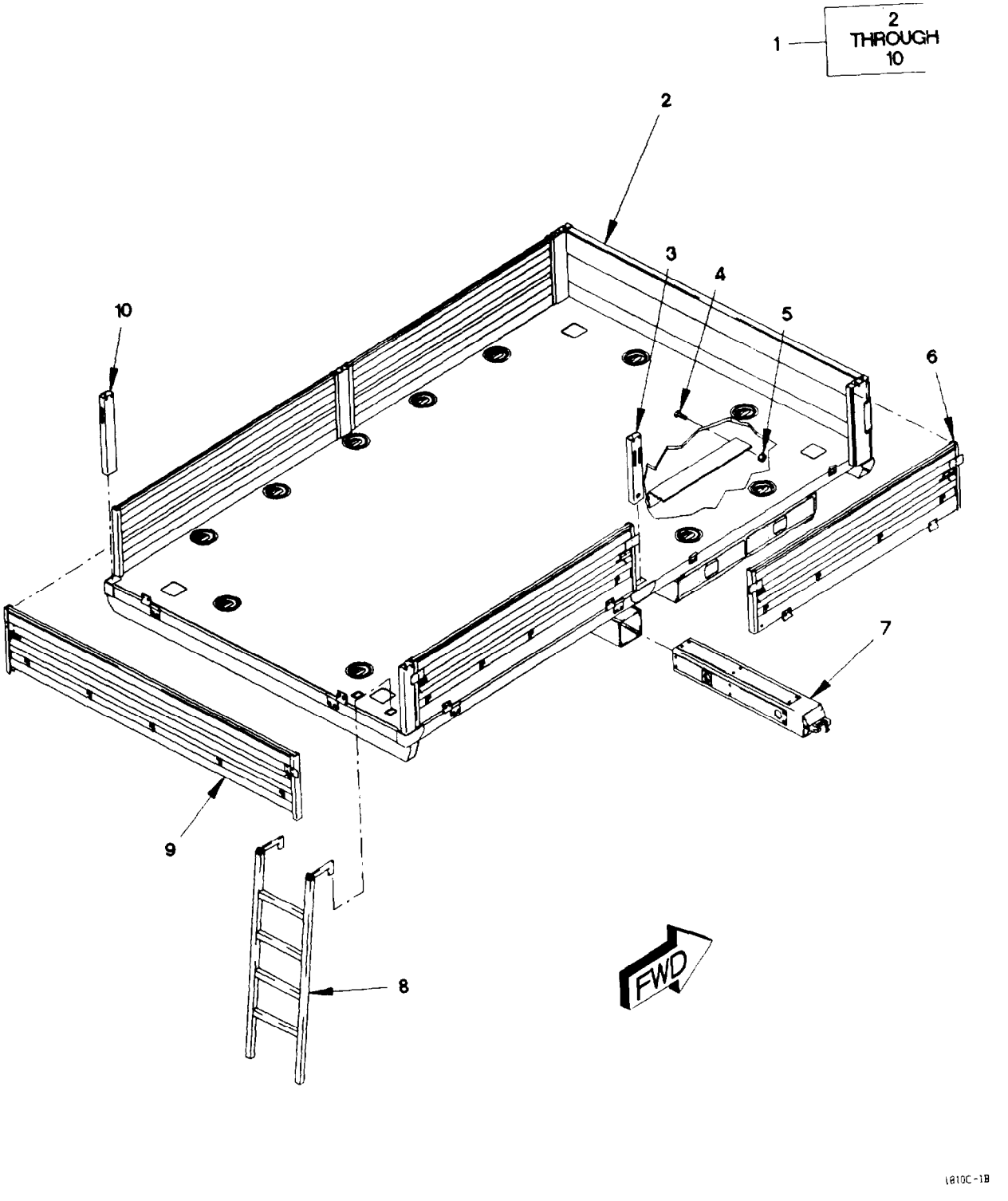

Figure 206. M1078 Cargo Bed, Dropside Assembly. and Ladder

(1) ITEM NO	(2) SMR CODE	(3) FSCM	(4) PART NUMBER	(5) DESCRIPTION AND USABLE ON CODE (UOC)	(6) QTY
				GROUP 1810: CARGO BODY FIG. 206 M1078 CARGO BED, DROPSIDE ASSEMBLY, AND LADDER	
1	AFFFF	0FW39	12378484	BODY, CARGO TRUCK UOC: LAB, LWB,	1
2	XAFZZ	19207	12422103	.CARGO BED, STANDARD (FOR COMPONENT PARTS SEE FIG. 210) UOC: LAB, LWB,	1
3	PAOZZ	19207	12421161	.SUPPORT, SEAT, VEHICU UOC: LAB, LWB,	2
4	PAOZZ	19207	12414307-079	BOLT, MACHINE M12 X 1.5 X 40 UOC: LAB, LWB,	16
5	PAOZZ	19207	12414308-007	NUT, SELF-LOCKING, EX M12 X 1.5 UOC: LAB, LWB,	16
6	PAOOO	19207	12417337	.SIDE RACK, VEHICLE B (FOR COMPONENT PARTS SEE FIG. 208) UOC: LAB, LWB,	4
7	PAOOO	19207	12414742	ARM ASSEMBLY, LIFT B (FOR COMPONENT PARTS SEE FIG. 209) UOC: LAB, LWB,	2
8	PAOZZ	0FW39	12418950	.LADDER, VEHICLE BOAR UOC: LAB, LWB,	1
9	PAOOO	19207	12418937	.SIDE RACK, VEHICLE B (FOR COMPONENT PARTS SEE FIG. 208) UOC: LAB, LWB,	1
10	PAOZZ	19207	12417248-001	.STAKE, VEHICLE BODY UOC: LAB, LWB,	2
				END OF FIGURE	

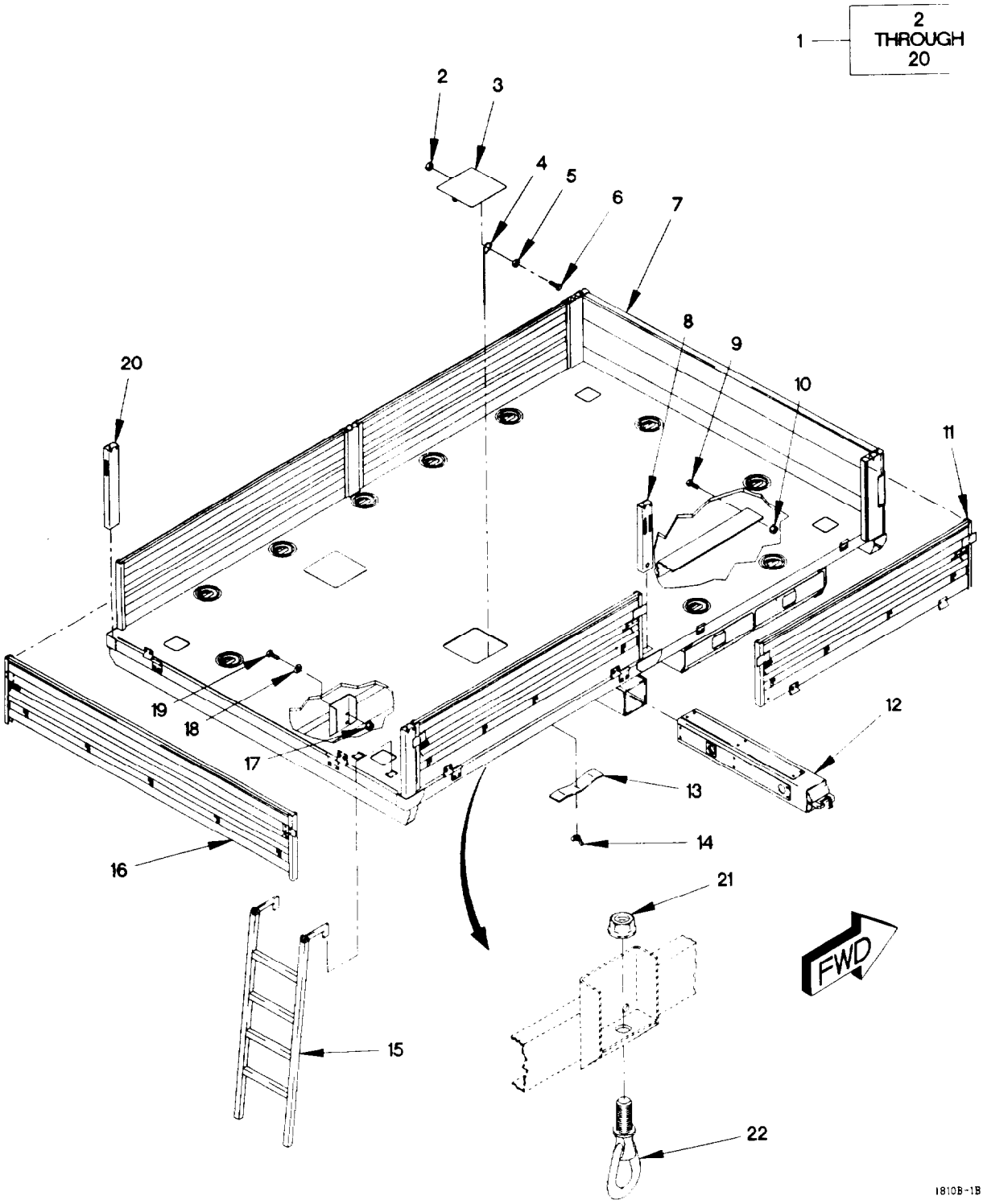

Figure 207. M1081 Cargo Bed, Dropside Assembly, and Ladder

(1) ITEM NO	(2) SMR CODE	(3) FSCM	(4) PART NUMBER	(5) DESCRIPTION AND USABLE ON CODE (UOC)	(6) QTY
				GROUP 1810: CARGO BODY FIG. 207 M1081 CARGO BED, DROSIDE ASSEMBLY, AND LADDER	
1	PFFFF	19207	12378483	BODY, CARGO TRUCK UOC: LAC, LWC,	1
2	PAOZZ	1FH08	DIN555M8	NUT, PLAIN, HEXAGON M8 X 1.25 UOC: LAC, LWC,	4
3	PAOZZ	19207	12420477	COVER, ACCESS UOC: LAC, LWC,	2
4	PAOZZ	19207	12420479	BOLT, EYE UOC: LAC, LWC,	2
5	PAOZZ	34914	990 3861	WASHER, FLAT M8.4 UOC: LAC, LWC,	2
6	PAOZZ	19207	12414307-039	SCREW, CAP, HEXAGON H M8 X 1.25 X 35 UOC: LAC, LWC,	2
7	XAFZZ	19207	12422073	CARGO BED, AIRDROP (FOR COMPONENT PARTS SEE FIG. 210) UOC: LAC, LWC,	1
8	PAOZZ	19207	12421161	.SUPPORT, SEAT, VEHICU UOC: LAC, LWC,	2
9	PAOZZ	19207	12414307-140	BOLT, MACHINE M16 X 1.5 X 45 UOC: LAC, LWC,	14
10	PAOZZ	19207	12414308-025	NUT, SELF-LOCKING, EX M16 X 1.5 UOC: LAC, LWC,	14
11	PAOOO	19207	12417337	.SIDE RACK, VEHICLE B (FOR COMPONENT PARTS SEE FIG. 208) UOC: LAC, LWC,	4
12	PAOOO	19207	12414742	ARM ASSEMBLY, LIFT B (FOR COMPONENT PARTS SEE FIG. 209) UOC: LAC, LWC,	2
13	PAOZZ	19207	12420478	STRAP, RETAINING UOC: LAC, LWC,	2
14	PAOZZ	96906	MS51553-518	NUT, SELF-LOCKING, WI 3/16-18 UOC: LAC, LWC,	2
15	PAOZZ	0FW39	12418950	.LADDER, VEHICLE BOAR UOC: LAC, LWC,	1
16	PAOOO	19207	12418937	.SIDE RACK, VEHICLE B (FOR COMPONENT PARTS SEE FIG. 208) UOC: LAC, LWC,	1
17	PAFZZ	19207	12414474-023	NUT, PLAIN, HEXAGON M20 X 2.5 UOC: LAC, LWC,	24
18	PAFZZ	19207	12414560-029	WASHER, LOCK M20 UOC: LAC, LWC,	24
19	PAFZZ	19207	12419954-179	SCREW, HEXAGON HEAD M20 X 2.5 X 50 UOC: LAC, LWC,	24
20	PAOZZ	19207	12417248-001	.STAKE, VEHICLE BODY UOC: LAC, LWC,	2

(1) ITEM NO	(2) SMR CODE	(3) FSCM	(4) PART NUMBER	(5) DESCRIPTION AND USABLE ON CODE (UOC)	(6) QTY
21	PAOZZ	96906	MS51943-52	NUT, SELF-LOCKING, HE 1 1/8-12 UOC: LAC, LWC,	4
22	PAOZZ	04368	21237LF	BOLT, RING 1 1/8-12 X 2 1/4 UOC: LAC, LWC,	4

END OF FIGURE

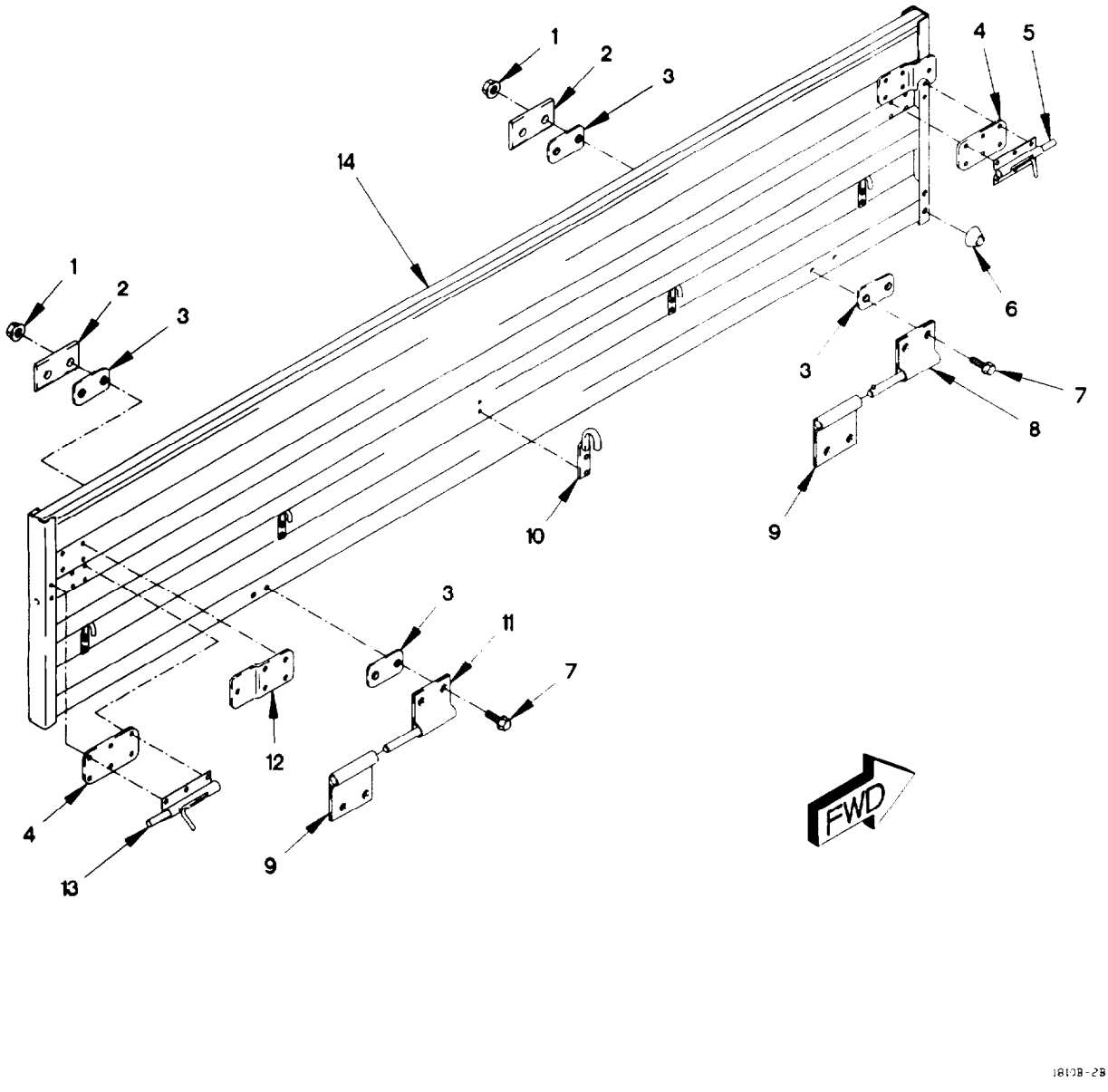

Figure 208. Dropside Assembly

(1) ITEM NO	(2) SMR CODE	(3) FSCM	(4) PART NUMBER	(5) DESCRIPTION AND USABLE ON CODE (UOC)	(6) QTY
				GROUP 1810: CARGO BODY FIG. 208 DROPSIDE ASSEMBLY	
1	PAOZZ	96906	MS51988-3	NUT, SELF-LOCKING, EX 1/4-20 UOC: LAB, LAC, LWB, LWC,	4
2	PAOZZ	19207	12418704	BRACKET, MOUNTING UOC: LAB, LAC, LWB, LWC,	2
3	PAOZZ	19207	12418633	GASKET UOC: LAB, LAC, LWB, LWC,	4
4	PAOZZ	19207	12418632	GASKET UOC: LAB, LAC, LWB, LWC,	2
5	PAOZZ	19207	12418665-001	BOLT, BARREL UOC: LAB, LAC, LWB, LWC,	1
6	PAOZZ	19207	12418629	BUMPER, NONMETALLIC UOC: LAB, LAC, LWB, LWC,	2
7	PAOZZ	80204	B1821BH025C125N	SCREW, CAP, HEXAGON H 1/4-20 X 1 1/4 UOC: LAB, LAC, LWB, LWC,	4
8	PAOZZ	19207	12418630	HINGE, BUTT UOC: LAB, LAC, LWB, LWC,	1
9	PAOZZ	19207	12418960	HINGE, BUTT UOC: LAB, LAC, LWB, LWC,	10
10	PAOZZ	19207	12418609	HOOK, SUPPORT UOC: LAB, LAC, LWB, LWC,	4
11	PAOZZ	0FW39	12418631	HINGE, BUTT UOC: LAB, LAC, LWB, LWC,	1
12	PAOZZ	19207	12418628	STOP, MECHANICAL USED ON SIDE DROPSIDE PANEL UOC: LAB, LAC, LWB, LWC,	2
13	PAOZZ	19207	12418665-002	BOLT, BARREL UOC: LAB, LAC, LWB, LWC,	1
14	XAOZZ	19207	12417246	PANEL ASSY, 70 IN SIDE DROPSIDE PANEL UOC: LAB, LAC, LWB, LWC,	4
				END OF FIGURE	

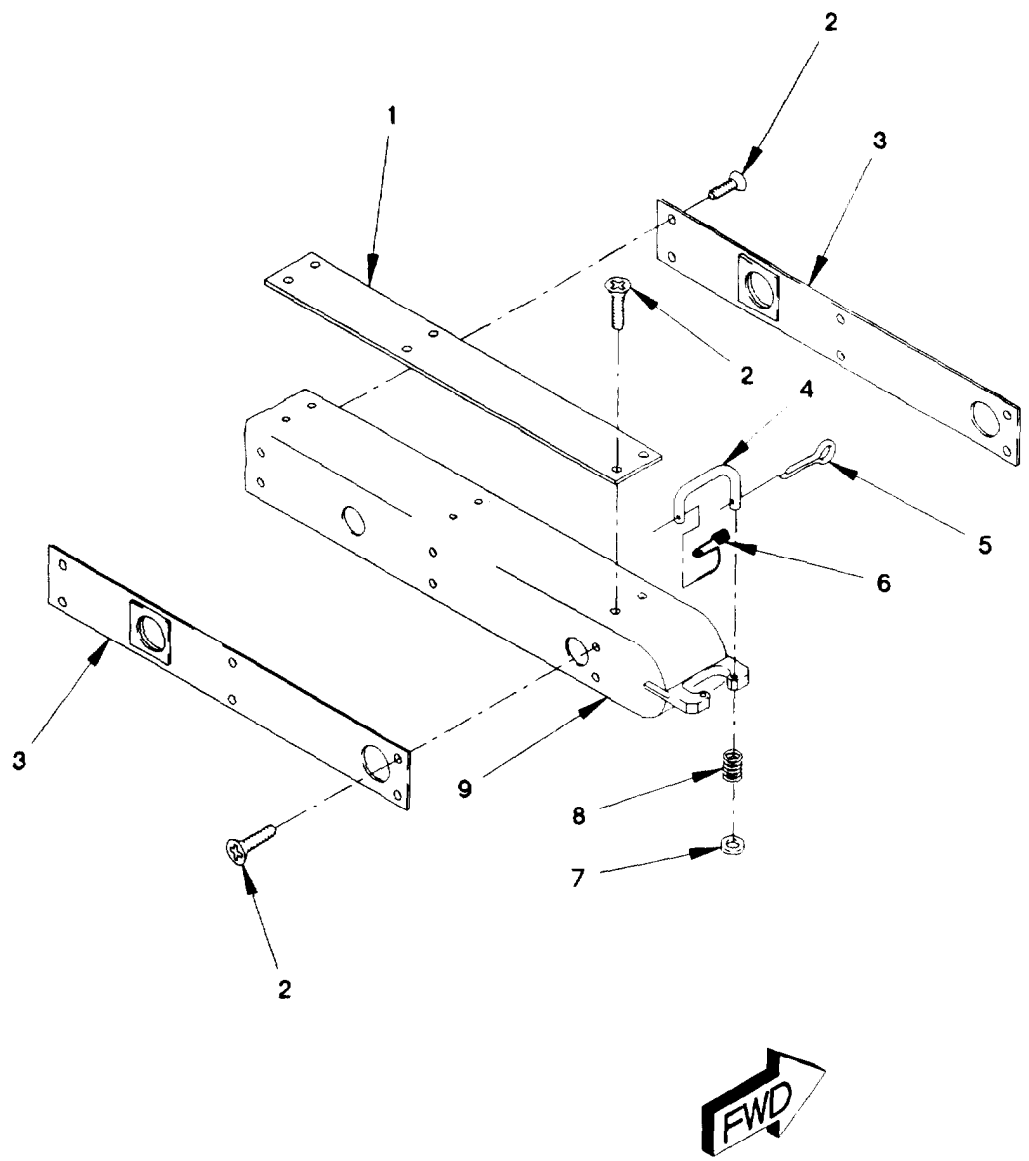

1501M-2B

Figure 209. Load Spreader Rear Lift Beam

(1) ITEM NO	(2) SMR CODE	(3) FSCM	(4) PART NUMBER	(5) DESCRIPTION AND USABLE ON CODE (UOC)	(6) QTY
				GROUP 1810: CARGO BODY	
				FIG. 209 LOAD SPREADER REAR LIFT BEAM	
1	PAOZZ	19207	12418616	SPACER, PLATE UOC: LAB, LAC, LWB, LWC,	2
2	PAOZZ	96906	MS24627-37	SCREW, TAPPING #8 X 7/8 UOC: LAB, LAC, LWB, LWC,	24
3	PAOZZ	19207	12418620	SPACER, PLATE UOC: LAB, LAC, LWB, LWC,	2
4	PAOZZ	19207	12418621-001	ROD, ANCHOR UOC: LAB, LAC, LWB, LWC,	1
5	PAOZZ	96906	MS24665-300	PIN, COTTER UOC: LAB, LAC, LWB, LWC,	1
6	PAOZZ	5V437	95-04-11-TM3	SPRING, HELICAL, TORS UOC: LAB, LAC, LWB, LWC,	1
7	PAOZZ	96906	MS27183-52	WASHER, FLAT 9/32 UOC: LAB, LAC, LWB, LWC,	1
8	PAOZZ	5V437	95-04-11-TM2	SPRING, HELICAL, COMP UOC: LAB, LAC, LWB, LWC,	1
9	XAOOO	19207	12418608	LIFT ARM UOC: LAB, LAC, LWB, LWC,	1
				END OF FIGURE	

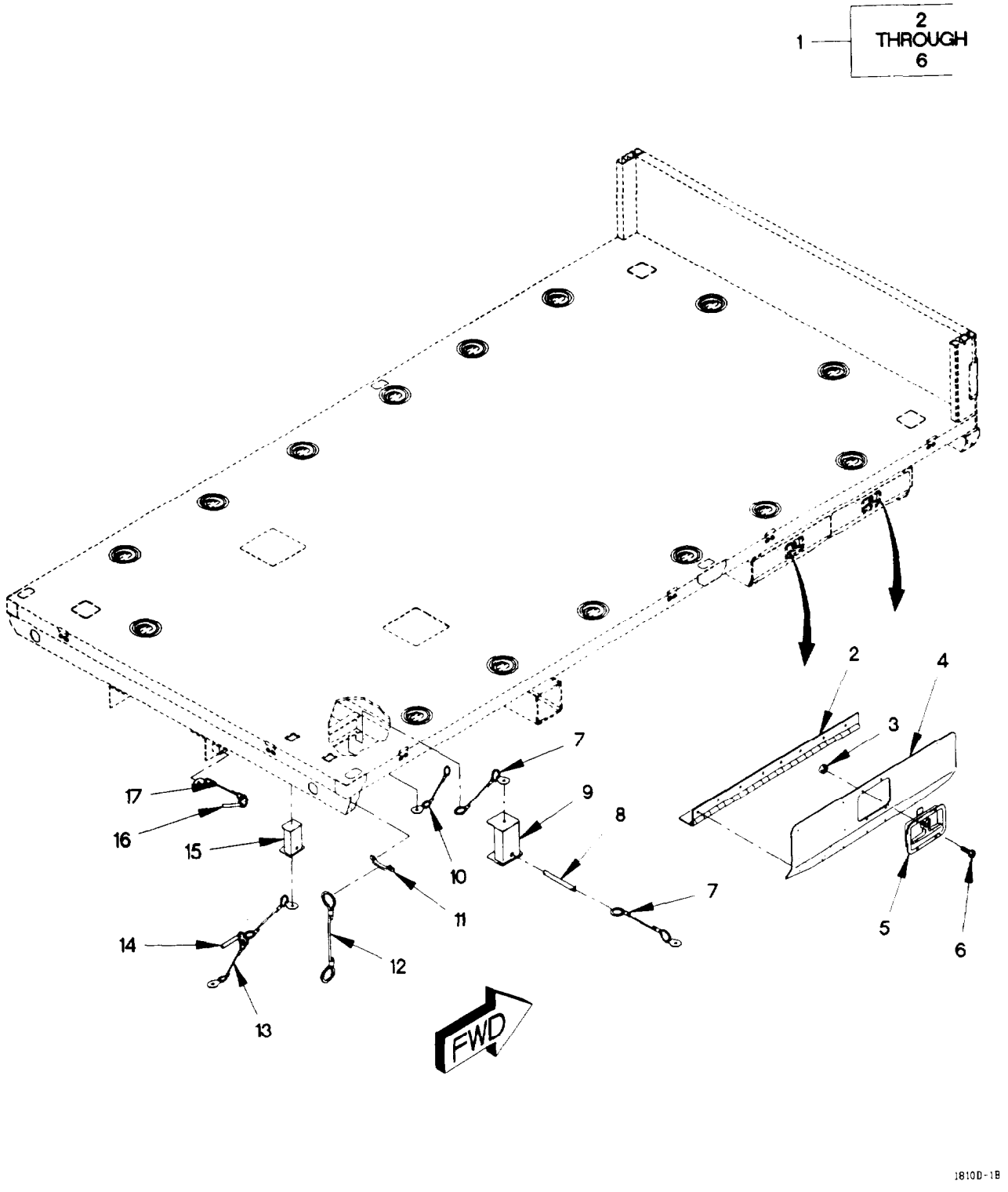

Figure 210. M1078 and M1081 Cargo Bed Sub-Assembly

(1) ITEM NO	(2) SMR CODE	(3) FSCM	(4) PART NUMBER	(5) DESCRIPTION AND USABLE ON CODE (UOC)	(6) QTY
				GROUP 1810: CARGO BODY FIG. 210 M1078 AND M1081 CARGO BED SUB-ASSEMBLY	
1	PAOZZ	0FW39	12414743	COVER, ACCESS REAR PANEL UOC: LAB, LAC, LWB, LWC,	2
1	PAOZZ	19207	12418835	DOOR, ACCESS FORWARD PANEL UOC: LAB, LAC, LWB, LWC,	1
2	PAOZZ	19207	12418595	.HINGE, BUTT UOC: LAB, LAC, LWB, LWC,	1
3	PAOZZ	96906	MS21083N08	.NUT, SELF-LOCKING, HE #8-32 UOC: LAB, LAC, LWB, LWC,	4
4	XAOZZ	19207	12418597	.PANEL, DOOR REAR UOC: LAB, LAC, LWB, LWC,	1
4	PAOZZ	19207	12418834-001	.PANEL, DOOR FORWARD UOC: LAB, LAC, LWB, LWC,	1
5	PAOZZ	19207	124188568-001	.LATCH, MORTISE UOC: LAB, LAC, LWB, LWC,	1
6	PAOZZ	96906	MS35206-245	.SCREW, MACHINE #8-32 X 1/2 UOC: LAB, LAC, LWB, LWC,	4
7	PAOZZ	19207	12418763-002	LANYARD ASSY UOC: LAB, LAC, LWB, LWC,	8
8	PAOZZ	19207	12417249	PIN ASSY UOC: LAB, LAC, LWB, LWC,	1
9	PAOZZ	19207	12414739	CLOSURE ASSEMBLY, CR UOC: LAB, LAC, LWB, LWC,	4
10	PAOZZ	19207	12418640-003	LANYARD ASSEMBLY UOC: LAB, LAC, LWB, LWC,	4
10	PAOZZ	09332	D8-50R-303	PIN, QUICK RELEASE UOC: LAB, LAC, LWB, LWC,	1
11	PAOZZ	19220	6411B	LOOP, STRAP FASTENER UOC: LAB, LAC, LWB, LWC,	2
12	PAOZZ	19207	12418640-002	LANYARD ASSY UOC: LAB, LAC, LWB, LWC,	2
13	PAOZZ	19207	12418763-001	LANYARD ASSEMBLY UOC: LAB, LAC, LWB, LWC,	4
14	PAOZZ	19207	12418764	PIN, QUICK RELEASE UOC: LAB, LAC, LWB, LWC,	2
15	PAOZZ	19207	12418775	PLUG, PROTECTIVE, DUS UOC: LAB, LAC, LWB, LWC,	2
16	PAOZZ	19207	12418774-001	DETENT PIN UOC: LAB, LAC, LWB, LWC,	1
17	PAOZZ	19207	12418763-001	LANYARD ASSEMBLY UOC: LAB, LAC, LWB, LWC,	1
				END OF FIGURE	

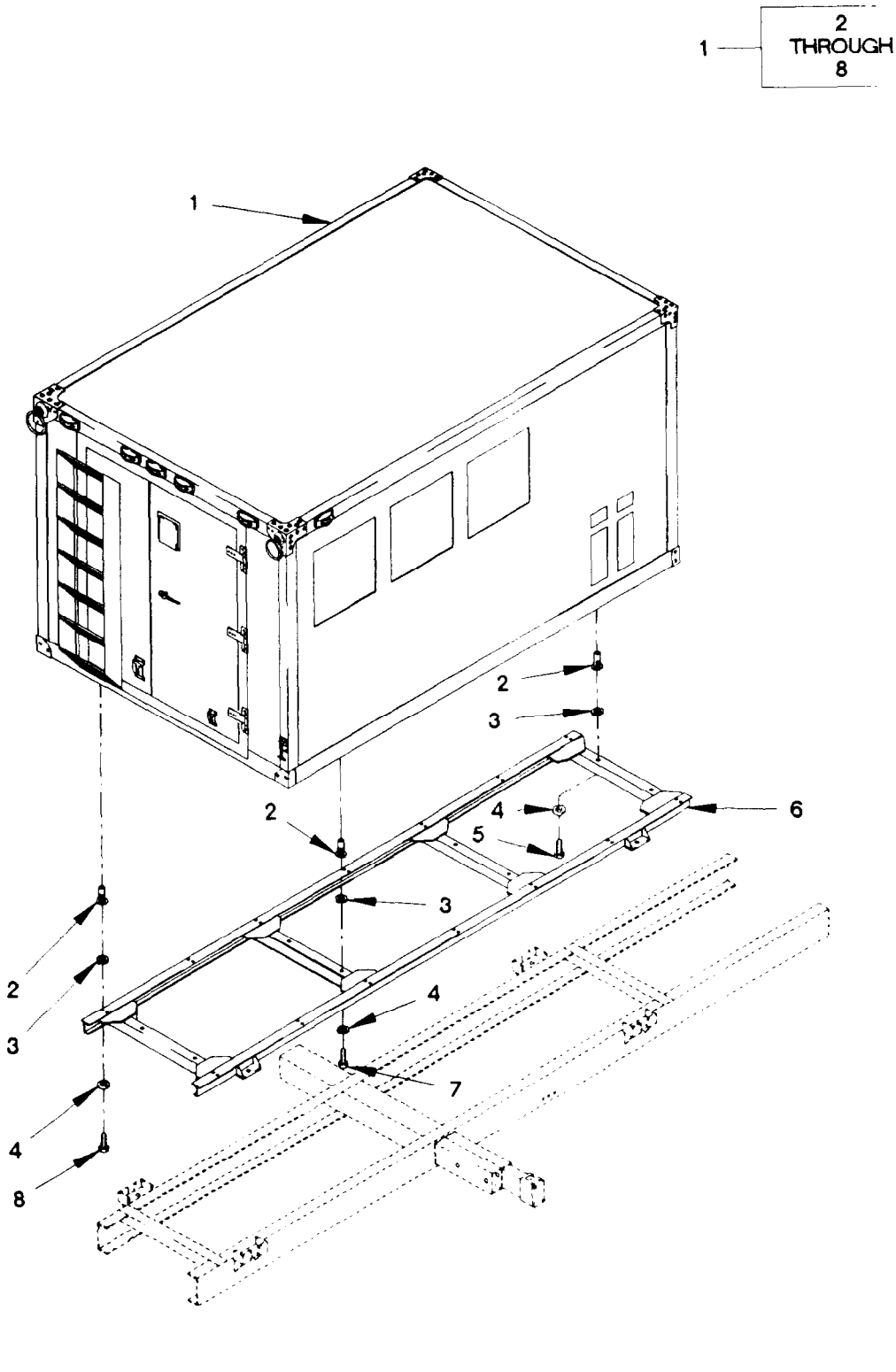

Figure 211. Van Body Upper Sub-Frame

(1) ITEM NO	(2) SMR CODE	(3) FSCM	(4) PART NUMBER	(5) DESCRIPTION AND USABLE ON CODE (UOC)	(6) QTY
				GROUP 1812: SPECIAL PURPOSE BODIES FIG. 211 VAN BODY UPPER SUB-FRAME	
1	PFOFH	19207	12415745	VAN BODY ASSEMBLY UOC: LAD, LWD,	1
1	PFOFH	19207	12421503	VAN BODY ASSEMBLY USED ON VAN BODY S/N 191 AND SUBSEQUENT UOC: LAD, LWD,	1
2	PAOZZ	03481	S37B200	.NUT, PLAIN, BLIND RIV UOC: LAD, LWD,	36
3	PAOZZ	96906	MS35338-46	.WASHER, LOCK 3/8 UOC: LAD, LWD,	36
4	PAOZZ	96906	MS15795-814	.WASHER, FLAT 13/32 UOC: LAD, LWD,	36
5	PAOZZ	96906	MS16995-81	.SCREW, CAP, SOCKET HE UOC: LAD, LWD,	2
6	XAOZZ	19207	12416360	.SUB-FRAME, CHASSIS UOC: LAD, LWD,	1
7	PAOZZ	80204	B1821BH038C150N	.SCREW, CAP, HEXAGON H 3/8-16 X 1 1/2 UOC: LAD, LWD,	6
8	PAOZZ	80204	B1821BH038C125N	.SCREW, CAP, HEXAGON H 3/8-16 X 1 1/4 UOC: LAD, LWD,	28
				END OF FIGURE	

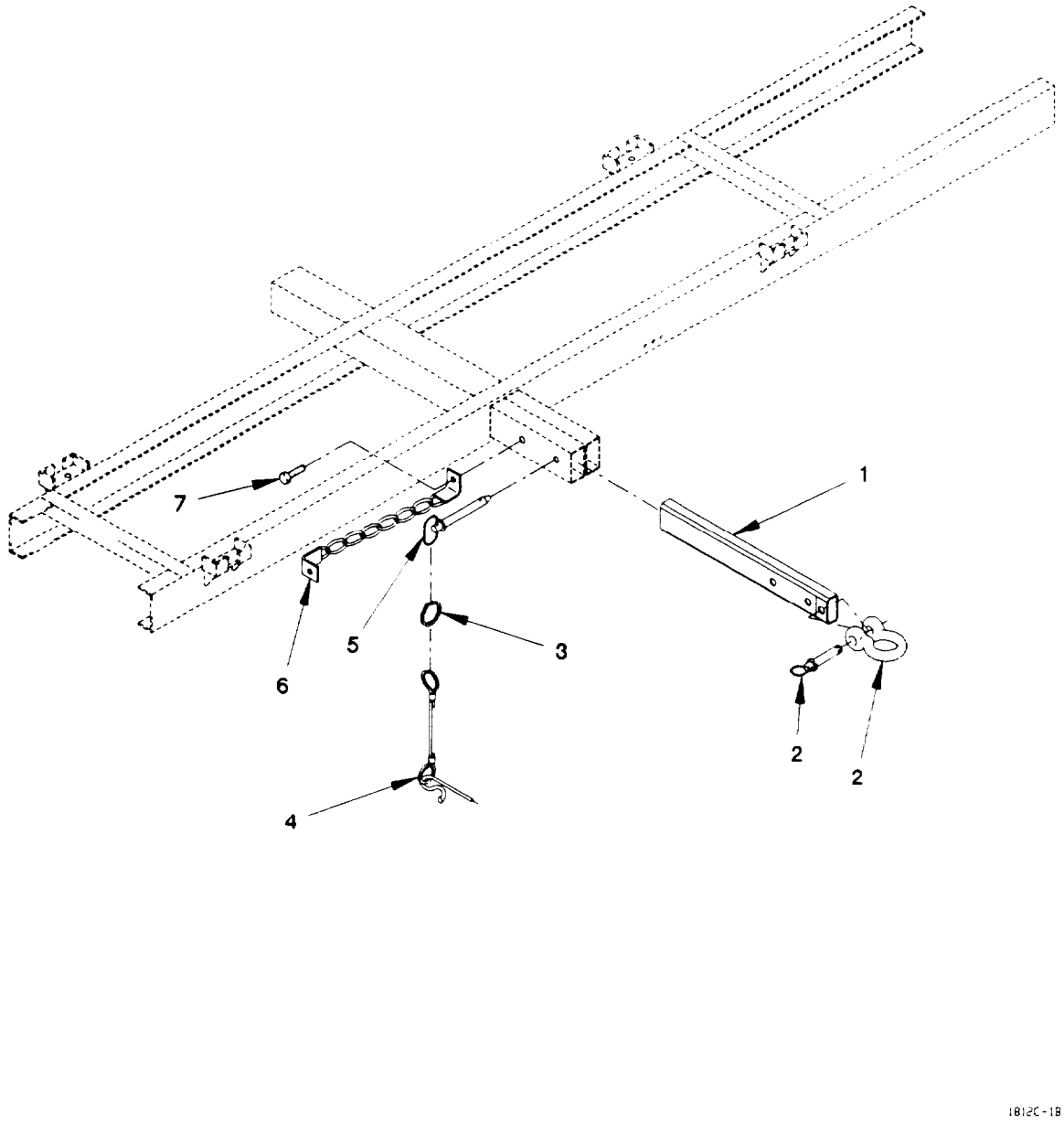

Figure 212. Van Lifting Arm Assembly

(1) ITEM NO	(2) SMR CODE	(3) FSCM	(4) PART NUMBER	(5) DESCRIPTION AND USABLE ON CODE (UOC)	(6) QTY
				GROUP 1812: SPECIAL PURPOSE BODIES FIG. 212 VAN LIFTING ARM ASSEMBLY	
1	PAOZZ	19207	12416370	BAR, SPREADER UOC: LAD, LWD,	2
2	PAOZZ	75535	G-209-1018570	SHACKLE, ANCHOR UOC: LAD, LWD,	2
3	PAOZZ	84256	13-4CD	RING, RETAINING UOC: LAD, LWD,	2
4	PAOZZ	4L145	79-08	LANYARD UOC: LAD, LWD,	2
5	PAOZZ	4L145	31-29	PIN, QUICK RELEASE UOC: LAD, LWD,	2
6	PAOZZ	19207	12419806	CHAIN ASSEMBLY, SING UOC: LAD, LWD,	2
7	PAOZZ	19207	12414307-035	BOLT, MACHINE M8 X 1.5 X 16 UOC: LAD, LWD,	4
				END OF FIGURE	

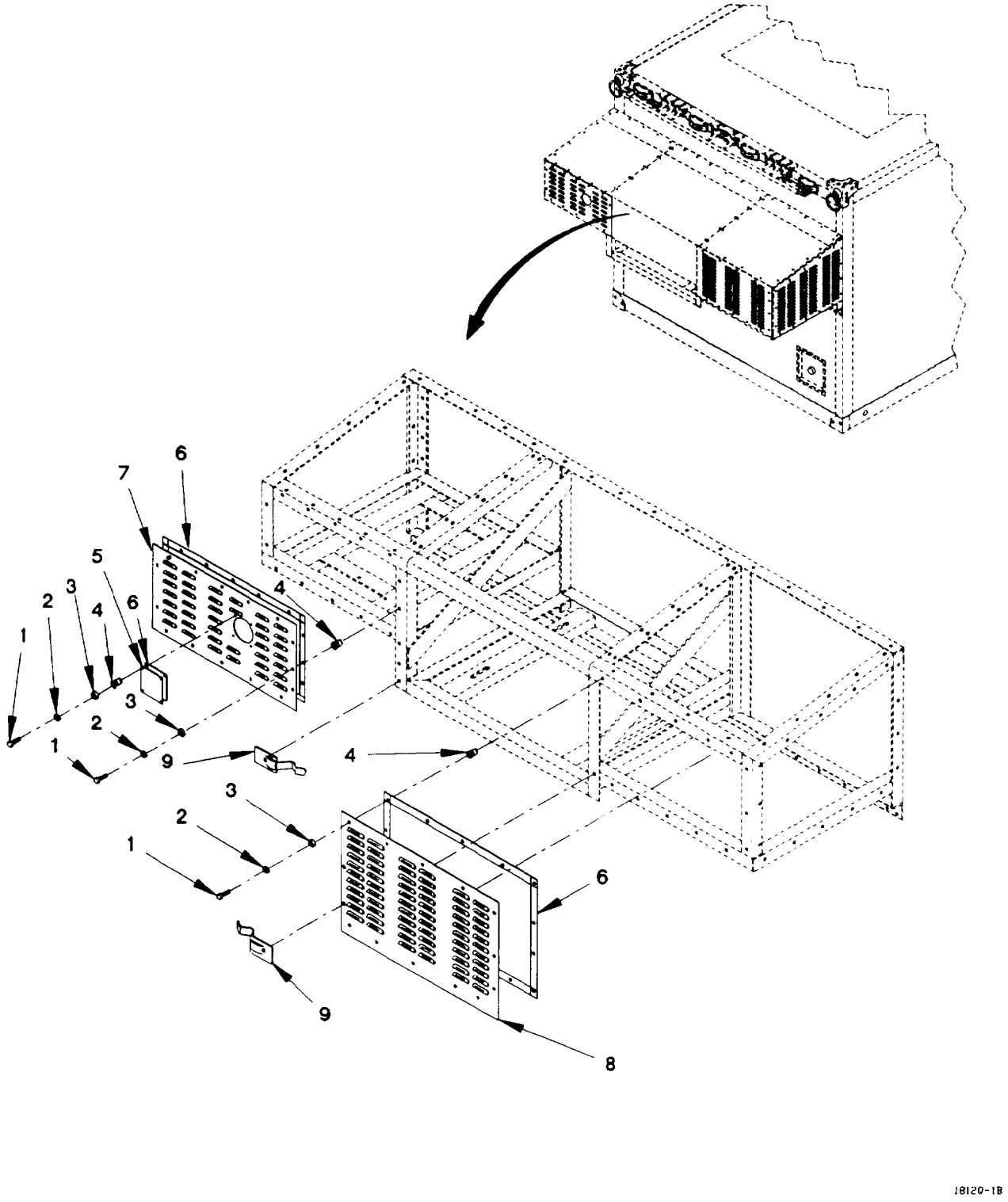

Figure 213. Van Pod Assembly (Sheet 1 of 3)

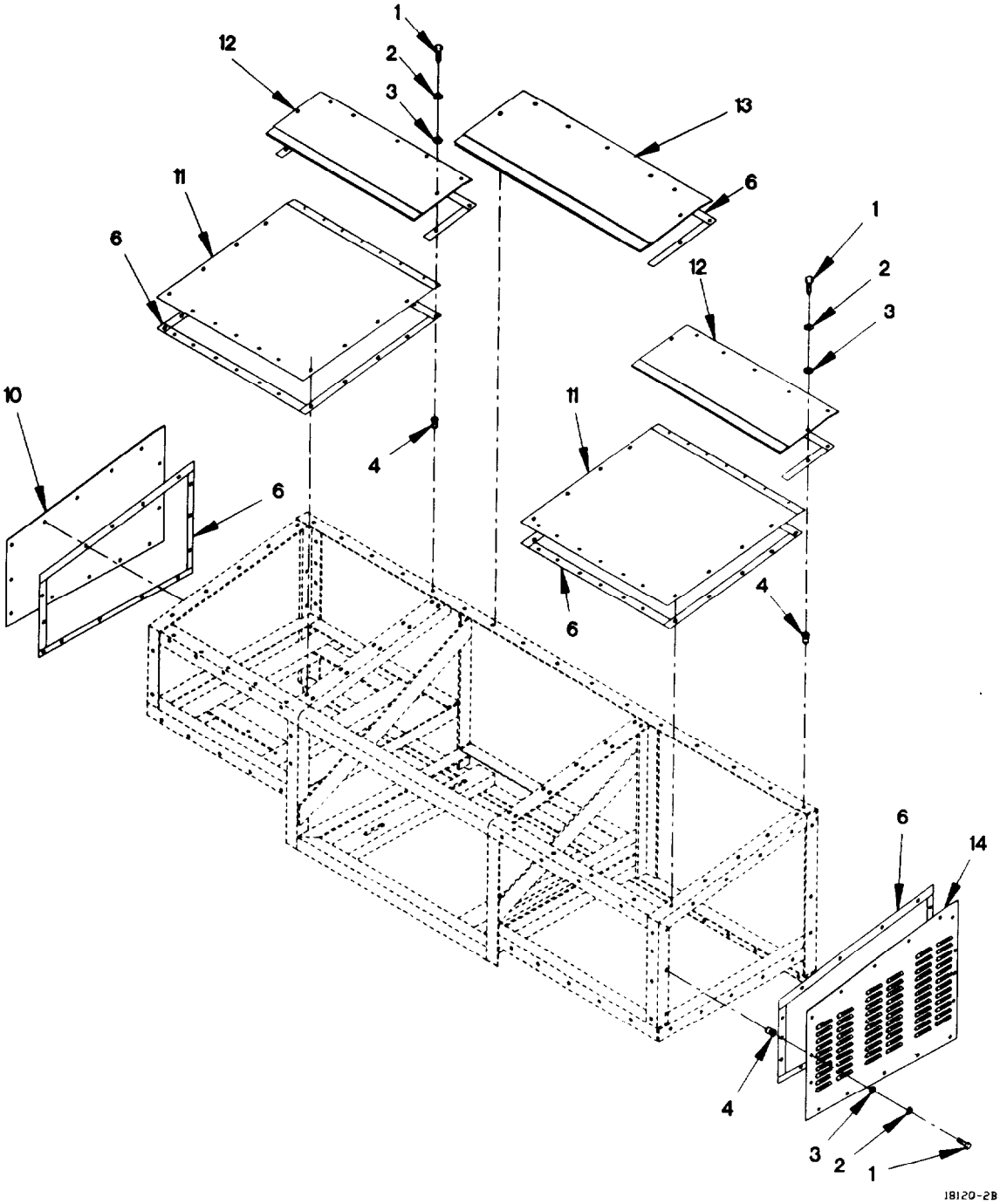

Figure 213. Van Pod Assembly (Sheet 2 of 3)

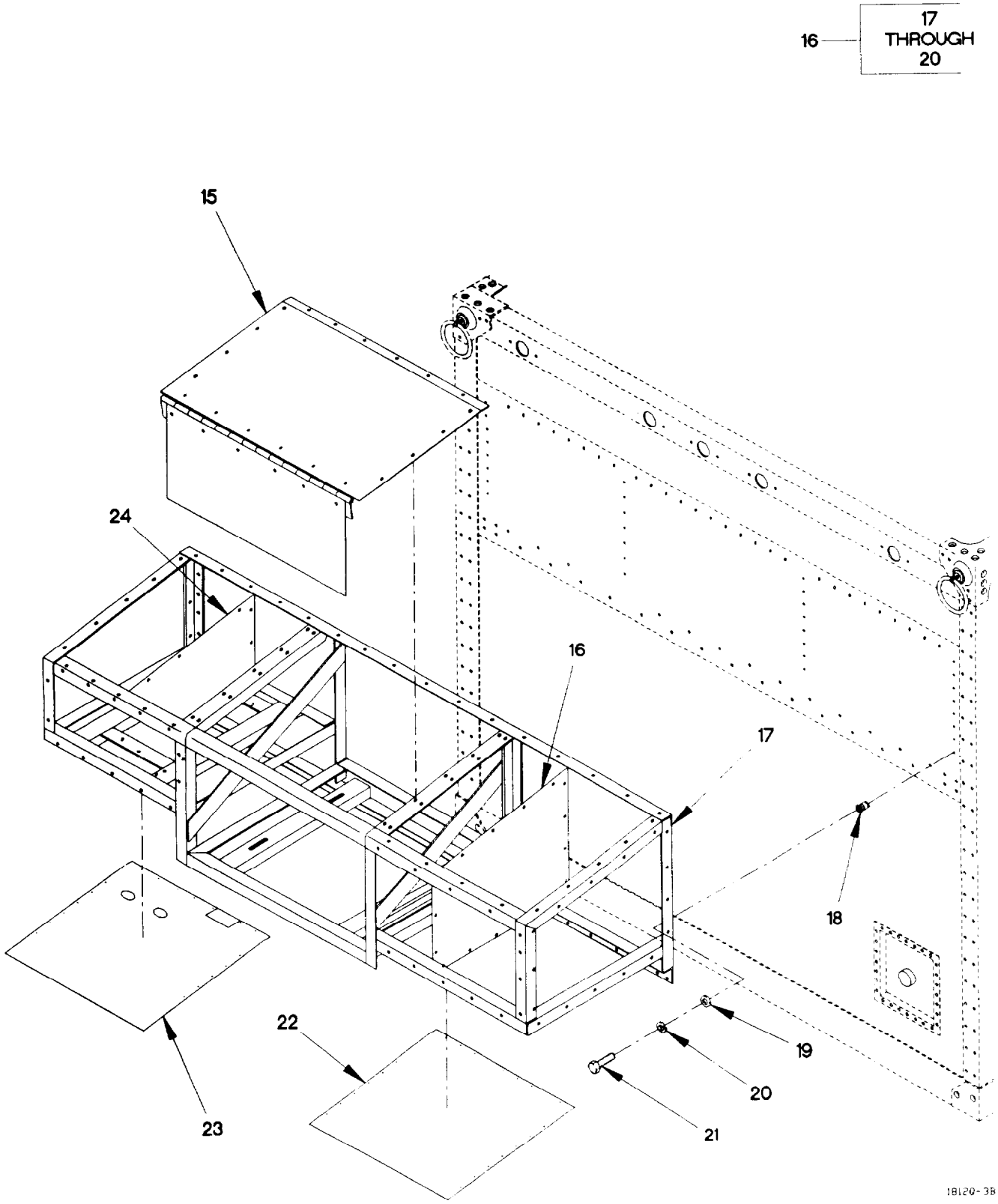

Figure 213. Van Pod Assembly (Sheet 3 of 3)

(1) ITEM NO	(2) SMR CODE	(3) FSCM	(4) PART NUMBER	(5) DESCRIPTION AND USABLE ON CODE (UOC)		(6) QTY
				GROUP 1812: SPECIAL PURPOSE BODIES FIG. 213 VAN POD ASSEMBLY		
1	PAOZZ	96906	MS51958-66	SCREW, MACHINE #10-32 X 7/8 UOC: LAD, LWD,		117
2	PAOZZ	96906	MS35338-138	WASHER, LOCK #10 UOC: LAD, LWD,		117
3	PAOZZ	96906	MS15795-808	WASHER, FLAT UOC: LAD, LWD,		117
4	PAOZZ	03481	S10-266	NUT, PLAIN, BLIND RIV UOC: LAD, LWD,		117
5	PFOZZ	19207	12421685	PLATE COVER, EXHAUST UOC: LAD, LWD,		1
6	PAOZZ	71643	100S	TAPE, ADHESIVE, RUBBE UOC: LAD, LWD,	V	
7	PFOZZ	19207	12421519-009	COVER FRONT, CURBSIDE UOC: LAD, LWD,		1
8	PFOZZ	19207	12421519-008	COVER FRONT, ROADSIDE UOC: LAD, LWD,		1
9	PAOZZ	55661	A-28	LATCH UOC: LAD, LWD,		2
10	XDOZZ	19207	12421519-007	COVER SIDE, CURB UOC: LAD, LWD,		1
11	XDOZZ	19207	12421519-002	COVER TOP, SIDE, FORWARD UOC: LAD, LWD,		2
12	XDOZZ	19207	12421519-005	COVER TOP, SIDE, AFT UOC: LAD, LWD,		2
13	XDOZZ	19207	12421519-015	COVER TOP, MIDDLE, AFT UOC: LAD, LWD,		1
14	PFOZZ	19207	12421519-006	COVER SIDE, ROADSIDE UOC: LAD, LWD,		1
15	XDOZZ	19207	12421519-016	COVER TOP, MIDDLE, FORWARD UOC: LAD, LWD,		1
16	XDOZZ	19207	12421519-010	COVER FIXED, ROADSIDE UOC: LAD, LWD,		1
17	PFOOO	19207	12421512	FRAME UOC: LAD, LWD,		1
18	PAOZZ	03481	S25B331	NUT, PLAIN, BLIND, RIV UOC: LAD, LWD,		96
19	PAOZZ	96906	MS27183-10	WASHER, FLAT 9/32 UOC: LAD, LWD,		96
20	PAOZZ	96906	MS51848-50	WASHER, LOCK UOC: LAD, LWD,		96
21	PAOZZ	96906	MS90728-8	SCREW, CAP, HEXAGON UOC: LAD, LWD,		96

(1) ITEM NO	(2) SMR CODE	(3) FSCM	(4) PART NUMBER	(5) DESCRIPTION AND USABLE ON CODE (UOC)	(6) QTY
22	XDOZZ	19207	12421519-018	PLATE BOTTOM, CURBSIDE UOC: LAD, LWD,	1
23	XDOZZ	19207	12421519-001	PLATE, BOTTOM, ROADSIDE UOC: LAD, LWD,	1
24	XDOZZ	19207	12421519-011	COVER FIXED, CURBSIDE UOC: LAD, LWD,	1

END OF FIGURE

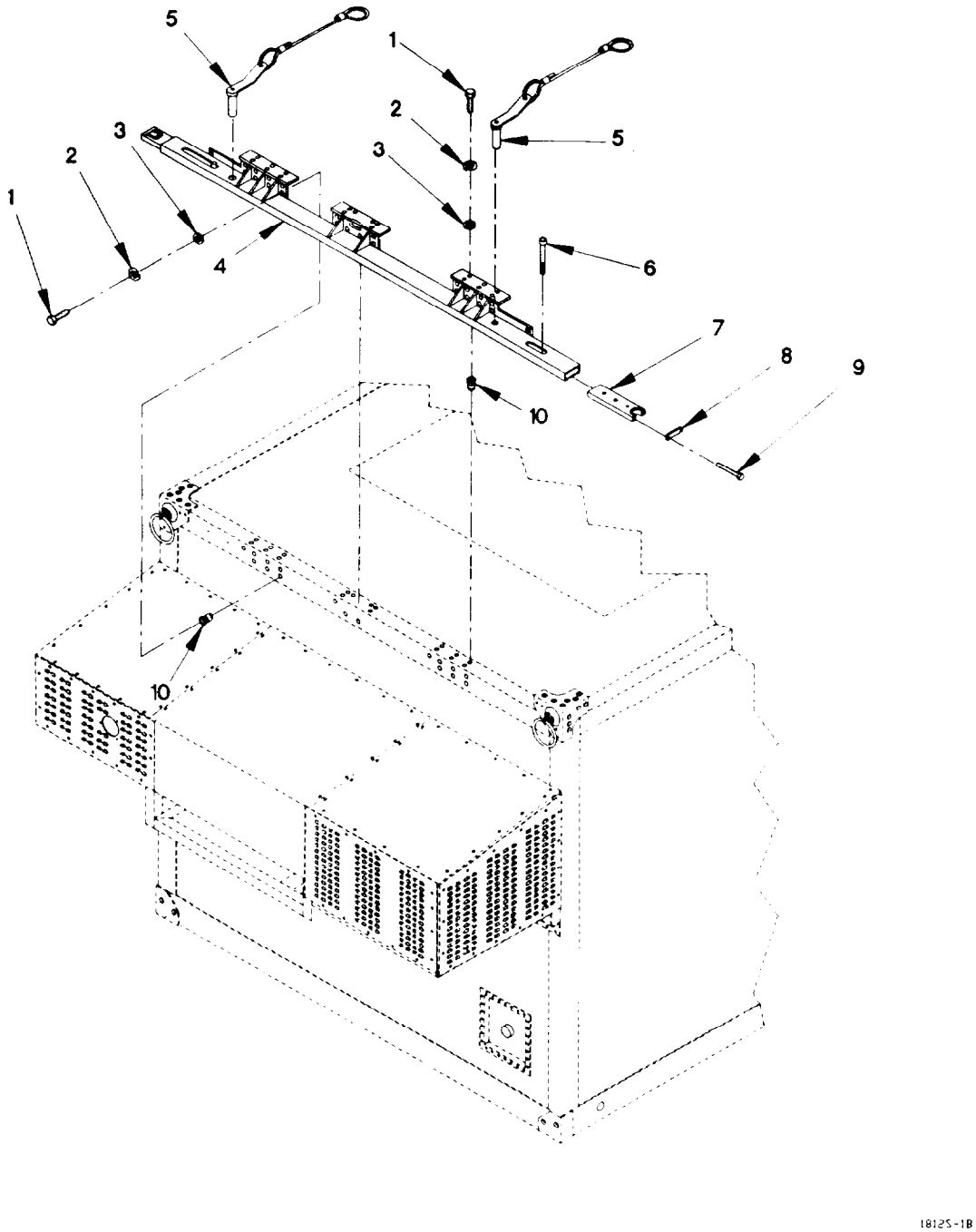

Figure 214. Van Spreader Bar

(1) ITEM NO	(2) SMR CODE	(3) FSCM	(4) PART NUMBER	(5) DESCRIPTION AND USABLE ON CODE (UOC)	(6) QTY
				GROUP 1812: SPECIAL PURPOSE BODIES	
				FIG. 214 VAN SPREADER BAR	
1	PAOZZ	96906	MS35307-337	BOLT, MACHINE 5/16-18 X 1 3/8	42
				UOC: LAD, LWD,	
2	PAOZZ	96906	MS35338-45	WASHER, LOCK 5/16	42
				UOC: LAD, LWD,	
3	PAOZZ	96906	MS27183-12	WASHER, FLAT 11/32	42
				UOC: LAD, LWD,	
4	PFOZZ	0FW39	12416588	SPREADER, SLING	1
				UOC: LAD, LWD,	
5	PAOZZ	19207	12421655	PIN ASSEMBLY, CLEVIS	2
				UOC: LAD, LWD,	
6	PAOZZ	96906	MS51975-28	SCREW, SHOULDER 3/8-16 X 1 3/8	2
				UOC: LAD, LWD,	
7	PAOZZ	19207	12416599	GUIDE, SLING	2
				UOC: LAD, LWD,	
8	PAOZZ	19207	12416589	CAP, PROTECTIVE, DUST	2
				UOC: LAD, LWD,	
9	PAOZZ	96906	MS51975-16	SCREW, SHOULDER	4
				UOC: LAD, LWD,	
10	PAOZZ	25472	S31B350	NUT, PLAIN, BLIND RIV	42
				UOC: LAD, LWD,	
				END OF FIGURE	

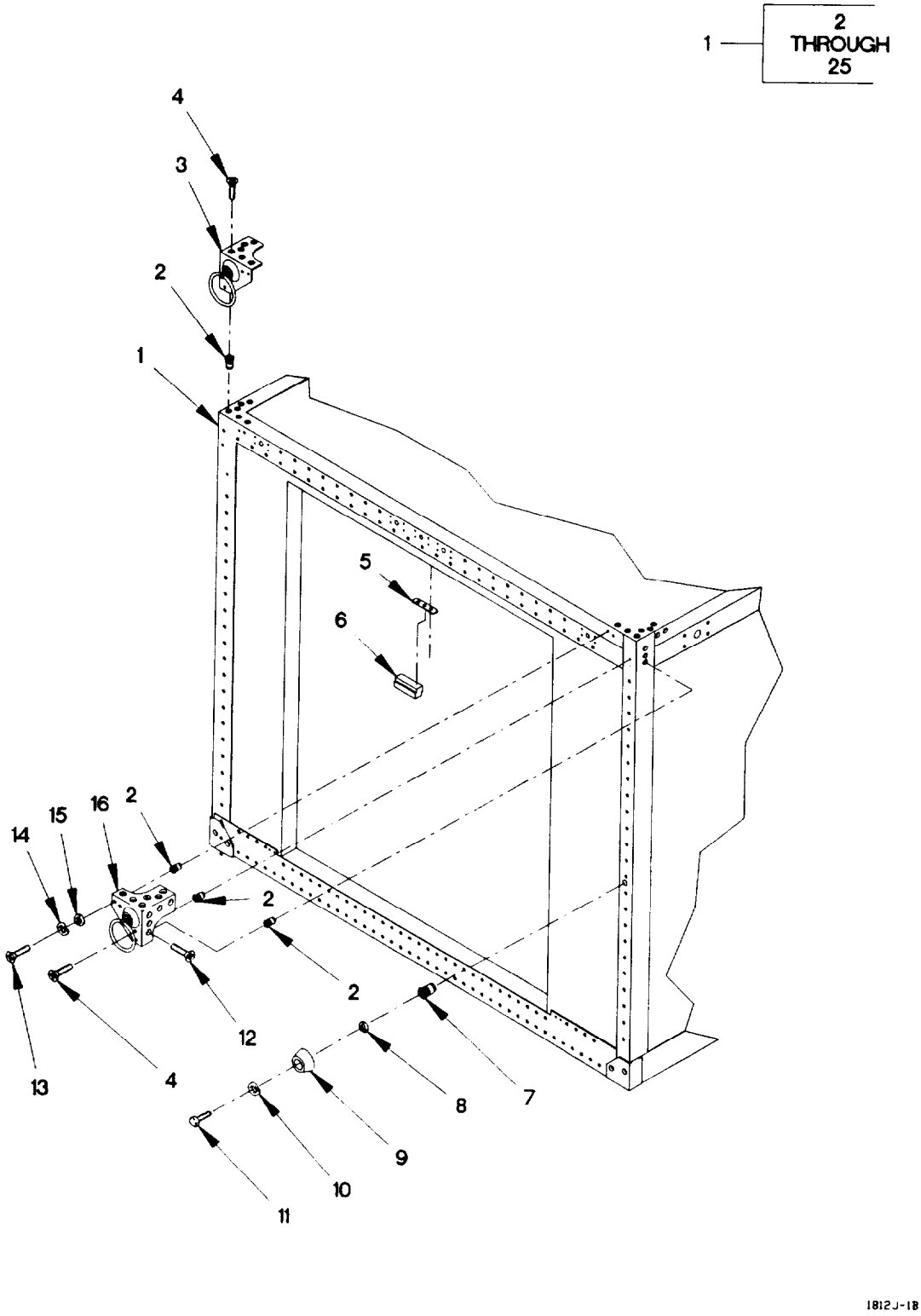

Figure 215. Van Body Panels, Fittings And Hardware (Sheet 1 of 2)

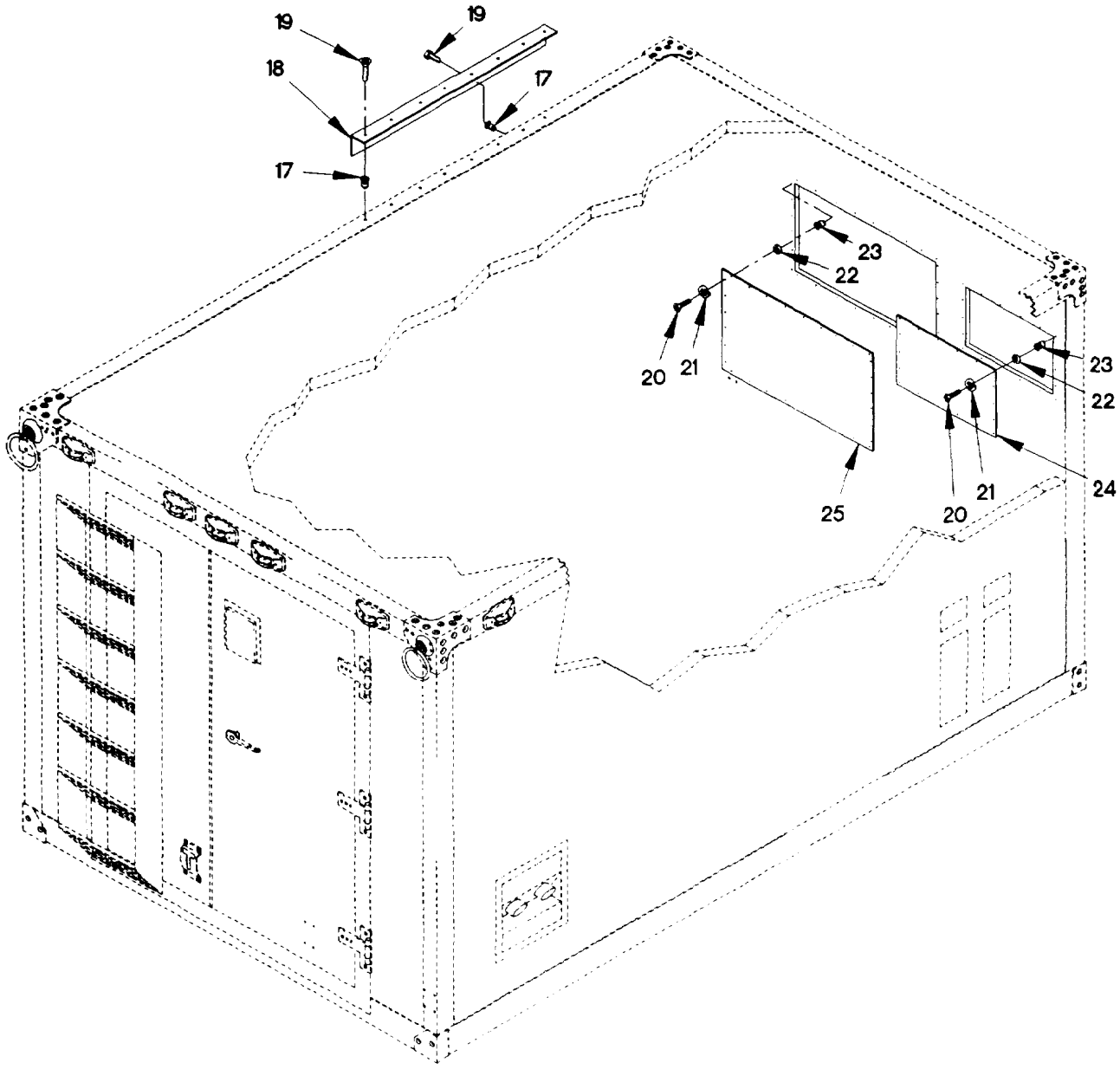

Figure 215. Van Body Panels, Fittings And Hardware (Sheet 2 of 2)

(1) ITEM NO	(2) SMR CODE	(3) FSCM	(4) PART NUMBER	(5) DESCRIPTION AND USABLE ON CODE (UOC)	(6) QTY
				GROUP 1812: SPECIAL PURPOSE BODIES FIG. 215 VAN BODY PANELS, FITTINGS AND HARDWARE	
1	XDOFF	19207	12416380	BODY, TRUCK VAN UOC: LAD, LWD,	1
1	XDOFF	19207	12421573	BODY ASSEMBLY, VAN USED ON VAN BODY S/N 191 AND SUBSEQUENT UOC: LAD, LWD,	1
2	PAOZZ	80063	SM-A-937236S7B4	.NUT, PLAIN, BLIND RIV UOC: LAD, LWD,	92
3	PAOZZ	19207	12416407	.BRACKET, ANGLE UOC: LAD, LWD,	2
4	PAOZZ	96906	MS24693-C143	.SCREW, MACHINE UOC: LAD, LWD,	8
5	PFOZZ	19207	12416468	.BRACKET, ANGLE UOC: LAD, LWD,	2
6	PFOZZ	19207	12416467	.SEAL, NONMETALLIC SP UOC: LAD, LWD,	2
7	PAOZZ	0VK23	S6B321	.NUT, PLAIN, BLIND RIV UOC: LAD, LWD,	2
8	PAOZZ	19207	12421644	.SPACER UOC: LAD, LWD,	2
9	PAOZZ	0FW39	12421421	.BUMPER, NONMETALLIC UOC: LAD, LWD,	2
10	PAOZZ	96906	MS35338-137	.WASHER, LOCK NO. 8 UOC: LAD, LWD,	2
11	PAOZZ	96906	MS51957-37	.SCREW, MACHINE #6-32 X 1 3/4 UOC: LAD, LWD,	2
12	PAOZZ	96906	MS24693-C144	.SCREW, MACHINE UOC: LAD, LWD,	64
13	PAOZZ	96906	MS35307-362	.SCREW, CAP, HEXAGON H 3/8-16 X 1 1/4 UOC: LAD, LWD,	24
14	PAOZZ	96906	MS35338-141	.WASHER, LOCK 3/8 UOC: LAD, LWD,	24
15	PAOZZ	96906	MS15795-815	.WASHER, FLAT 7/16 UOC: LAD, LWD,	24
16	PAOZZ	19207	12416408	.BRACKET, ANGLE UOC: LAD, LWD,	2
17	PAOZZ	80063	SM-C-563711-12	.NUT, PLAIN, BLIND, RIV UOC: LAD, LWD,	50
18	XDOZZ	19207	12416591	.ANGLE, BEARING, SLING UOC: LAD, LWD,	2
19	PAOZZ	96906	MS51959-84	.SCREW, MACHINE UOC: LAD, LWD,	48
20	PAOZZ	96906	MS51957-96	.SCREW, MACHINE 5/16-18 X 3/4 UOC: LAD, LWD,	47

(1) ITEM NO	(2) SMR CODE	(3) FSCM	(4) PART NUMBER	(5) DESCRIPTION AND USABLE ON CODE (UOC)	(6) QTY
21	PAOZZ	96906	MS35338-140	.WASHER, LOCK 5/16 UOC: LAD, LWD,	55
22	PAOZZ	96906	MS15795-811	.WASHER, FLAT 5/16 UOC: LAD, LWD,	47
23	PAOZZ	80063	SM-C-563711-13	.NUT, PLAIN, BLIND RIV UOC: LAD, LWD,	47
24	XDOZZ	19207	12421653	.COVER HEATER CONTROL UOC: LAD, LWD,	1
25	XDOZZ	19207	12416541	.COVER A/C OPENING UOC: LAD, LWD,	1

END OF FIGURE

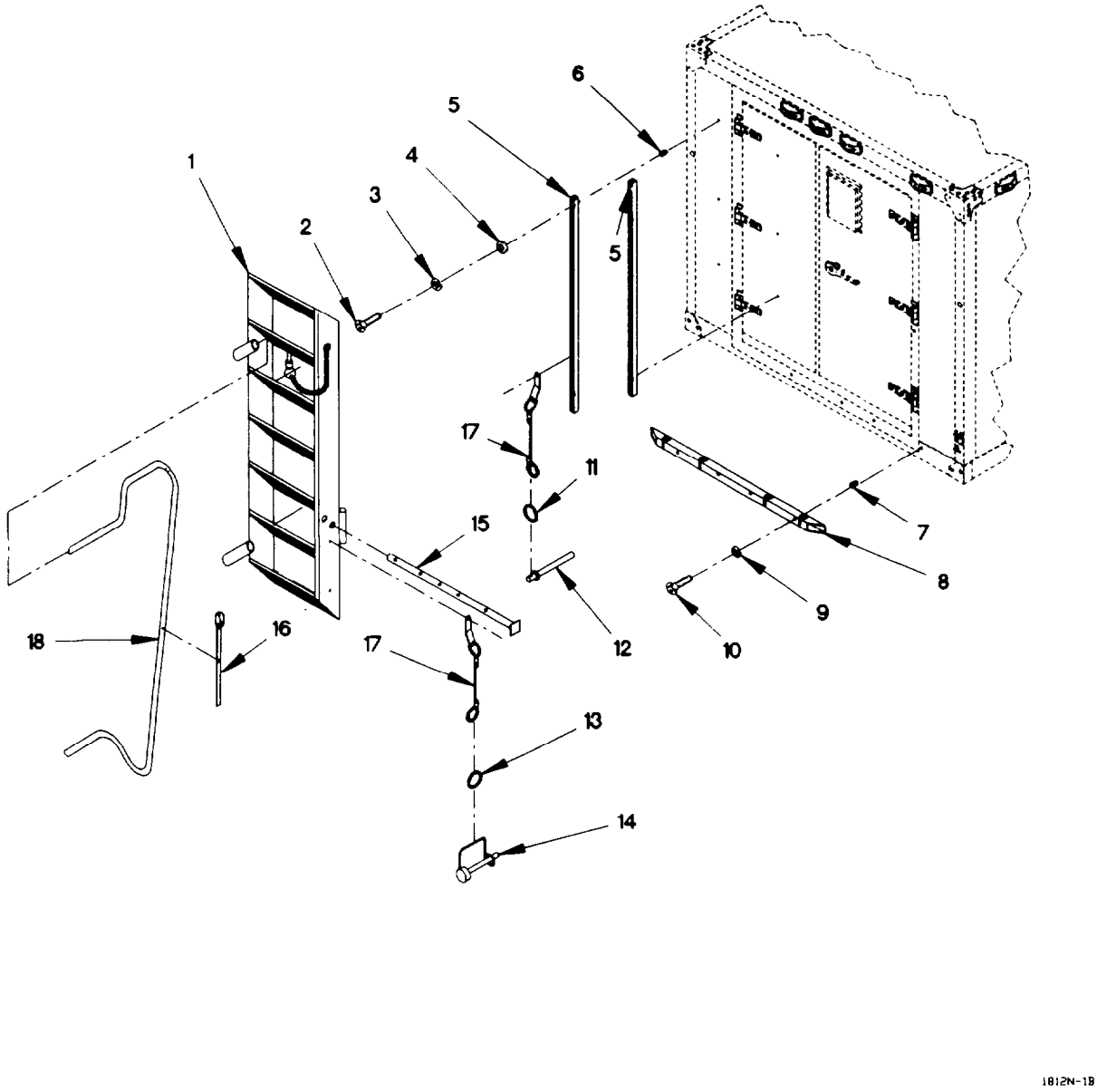

Figure 216. Van Steps

(1) ITEM NO	(2) SMR CODE	(3) FSCM	(4) PART NUMBER	(5) DESCRIPTION AND USABLE ON CODE (UOC)	(6) QTY
				GROUP 1812: SPECIAL PURPOSE BODIES	
				FIG. 216 VAN STEPS	
1	PAOZZ	19207	12421355	LADDER, BOARDING	1
				UOC: LAD, LWD,	
2	PAOZZ	96906	MS16997-60	SCREW, CAP, SOCKET HE	6
				UOC: LAD, LWD,	
3	PAOZZ	96906	MS35340-44	WASHER, LOCK	6
				UOC: LAD, LWD,	
4	PAOZZ	80205	NAS1149C0463R	WASHER, FLAT	6
				UOC: LAD, LWD,	
5	XDOZZ	19207	12421357	BRACKET	2
				UOC: LAD, LWD,	
6	PAOZZ	03481	S25KB211	NUT, PLAIN, BLIND, RIV	6
				UOC: LAD, LWD,	
7	PAOZZ	03481	S25B331	NUT, PLAIN, BLIND, RIV	4
				UOC: LAD, LWD,	
8	XDOZZ	19207	12421358	BRACKET, MOUNTING	1
				UOC: LAD, LWD,	
9	PAOZZ	96906	MS35338-139	WASHER, LOCK	4
				UOC: LAD, LWD,	
10	PAOZZ	96906	MS16997-62	SCREW, CAP, SOCKET HE	4
				UOC: LAD, LWD,	
11	PAOZZ	84256	19-8CD	RING, RETAINING	1
				UOC: LAD, LWD,	
12	PAOZZ	96906	MS17987C422	PIN, QUICK RELEASE	1
				UOC: LAD, LWD,	
13	PAOZZ	84256	13-4CD	RING, RETAINING	3
				UOC: LAD, LWD,	
14	PAOZZ	50620	38-20LP	PIN, STRAIGHT, HEADED	2
				UOC: LAD, LWD,	
15	PAOZZ	19207	12421356	LEG, ADJUSTABLE	2
				UOC: LAD, LWD,	
16	PAOZZ	19207	12421364	STRAP	1
				UOC: LAD, LWD,	
17	PAOZZ	19207	12418763-003	LANYARD ASSEMBLY	3
				UOC: LAD, LWD,	
18	PAOZZ	19207	12421359	HANDRAIL, VAN	1
				UOC: LAD, LWD,	
				END OF FIGURE	

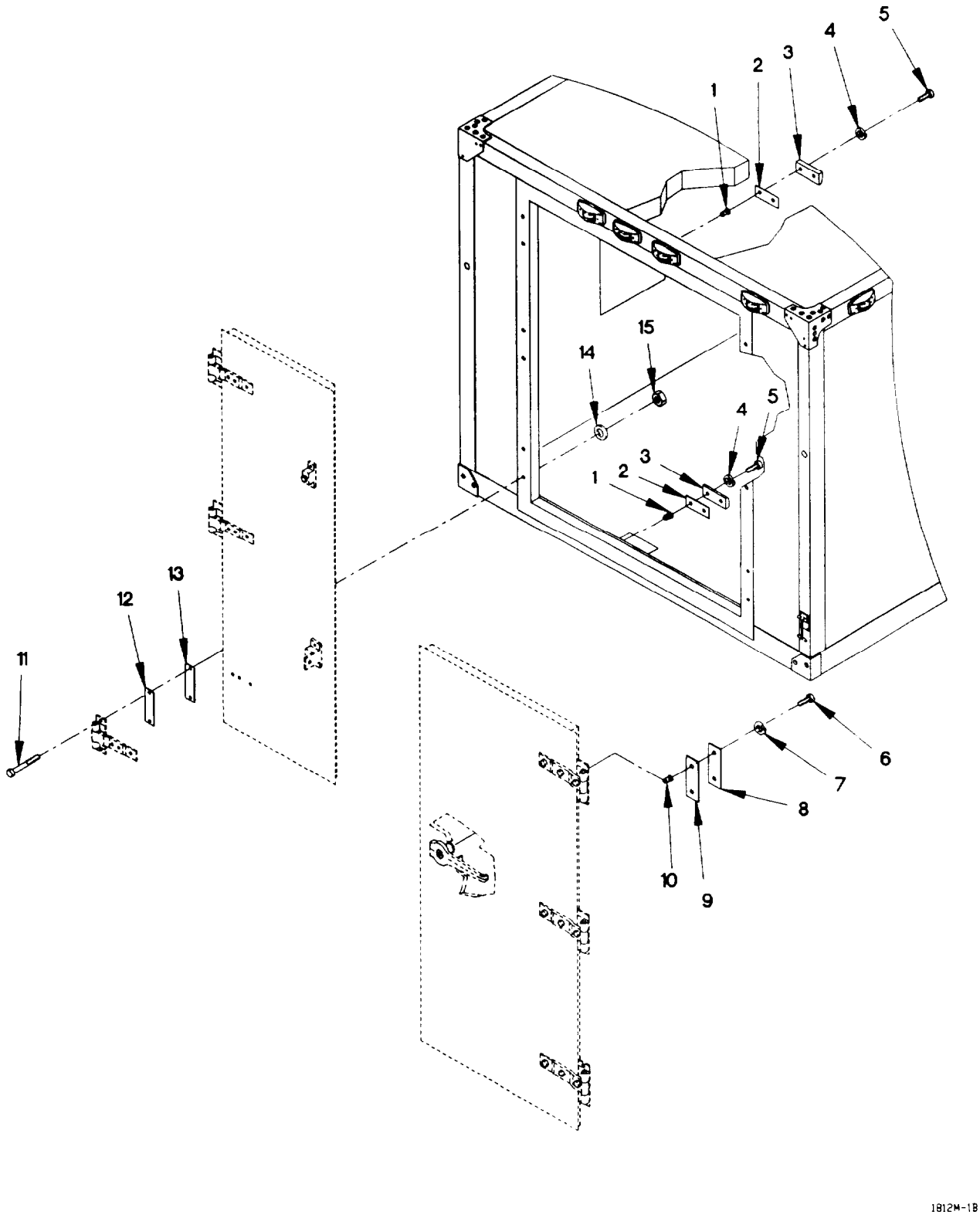

Figure 217. Van Door Catch Striker and Fittings

(1) ITEM NO	(2) SMR CODE	(3) FSCM	(4) PART NUMBER	(5) DESCRIPTION AND USABLE ON CODE (UOC)		(6) QTY
				GROUP 1812: SPECIAL PURPOSE BODIES FIG. 217 VAN DOOR CATCH STRIKER AND FITTINGS		
1	PAOZZ	03481	S10-330	NUT, PLAIN, BLIND RIV UOC: LAD, LWD,		4
2	PAOZZ	0FW39	12416458-001	SHIM, STRIKER PAD UOC: LAD, LWD,	V	
3	PAOZZ	0FW39	12416457	STRIKE, CATCH UOC: LAD, LWD,		2
4	PAOZZ	96906	MS35338-138	WASHER, LOCK #10 UOC: LAD, LWD,		4
5	PAOZZ	96906	MS51958-68	SCREW, MACHINE #10-32 X 1 1/4 UOC: LAD, LWD,		4
6	PAOZZ	96906	MS35307-308	SCREW, CAP, HEXAGON H 1/4-20 X 5/8 UOC: LAD, LWD,		6
7	PAOZZ	96906	MS35338-158	WASHER, LOCK 1/4 UOC: LAD, LWD,		6
8	PAOZZ	80063	SC-C-200154	KEEPER, SHELTER UOC: LAD, LWD,		3
9	PAOZZ	81337	SC-B-200153	SPACER SET PLATE UOC: LAD, LWD,	V	
10	PAOZZ	96906	MS27130S135	NUT, PLAIN, BLIND RIV UOC: LAD, LWD,		6
11	PAOZZ	88044	AN5C26A	BOLT, MACHINE 5/16-24 X 2 7/8 UOC: LAD, LWD,		12
12	PAOZZ	81337	SM-B-162197	SPACER SET UOC: LAD, LWD,	V	
13	PFOZZ	19207	12416456	SPACER, SLEEVE UOC: LAD, LWD,		6
14	PAOZZ	96906	MS15795-812	WASHER, FLAT 11/32 UOC: LAD, LWD,		12
15	PAOZZ	96906	MS21042-5	NUT, SELF-LOCKING, EX 5/16-24 UOC: LAD, LWD,		12
				END OF FIGURE		

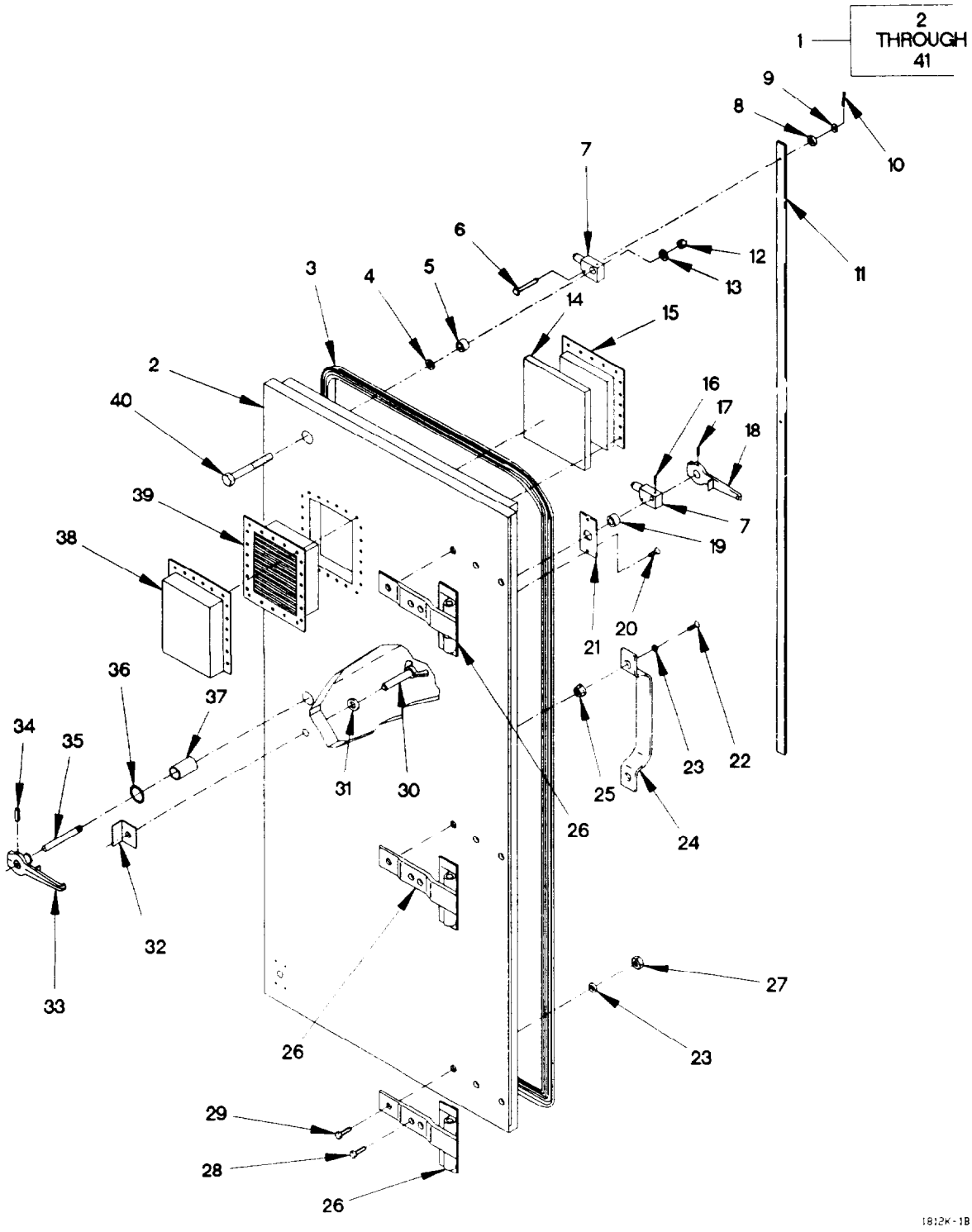

Figure 218. Van RH Door Assembly

(1) ITEM NO	(2) SMR CODE	(3) FSCM	(4) PART NUMBER	(5) DESCRIPTION AND USABLE ON CODE (UOC)		(6) QTY
				GORUP 1812: SPECIAL PURPOSE BODIES FIG. 218 VAN RH DOOR ASSEMBLY		
1	PAOOO	19207	12414374	DOOR, ACCESS RIGHT UOC: LAD, LWD,		1
2	XAOZZ	19207	12416368	.PANEL, DOOR UOC: LAD, LWD,		1
3	MOOZZ	19207	12416417	.GASKET, SILICONE MAKE FROM SILICONE RUBBER, IAW ZZ-R-765, CLASS 3B, GRADE 50 UOC: LAD, LWD,	V	
4	PAOZZ	0FW39	12416444-002	.SPACER, RING UOC: LAD, LWD,		2
5	PAOZZ	0FW39	12416443	.SPACER, SLEEVE UOC: LAD, LWD,		2
6	PAOZZ	96906	MS20392-3C45	.PIN, STRAIGHT, HEADED UOC: LAD, LWD,		3
7	PAOZZ	0FW39	12416376	.LATCH, DOOR, VEHICULA UOC: LAD, LWD,		3
8	PAOZZ	88044	AN960C416L	.WASHER, FLAT 1/4 UOC: LAD, LWD,		3
9	PAOZZ	73287	WW519S18	.WASHER, SPRING TENSI 25/32 UOC: LAD, LWD,		2
10	PAOZZ	96906	MS171659	.PIN, SPRING UOC: LAD, LWD,		3
11	PAOZZ	19207	12416447	.CONNECTING LINK, RIG UOC: LAD, LWD,		1
12	PAOZZ	96906	MS16228-10C	.NUT, SELF-LOCKING, HE 5/8-11 UOC: LAD, LWD,		2
13	PAOZZ	96906	MS15795-820	.WASHER, FLAT 21/32 UOC: LAD, LWD,		3
14	PAOZZ	0FW39	12416563	.STRAINER ELEMENT, SE UOC: LAD, LWD,		1
15	PAOZZ	19207	12416557	.RETAINER, FILTER, AIR UOC: LAD, LWD,		1
16	PAOZZ	96906	MS171661	.PIN, SPRING UOC: LAD, LWD,		1
17	PAOZZ	06004	9820378	.PIN, SPRING UOC: LAD, LWD,		1
18	PAOZZ	19207	12416449-002	.HANDLE, DOOR, VEHICUL UOC: LAD, LWD,		1
19	PAOZZ	19207	12416444-003	.SPACER, RING UOC: LAD, LWD,		1
20	PAOZZ	96906	MS35493-78	.SCREW, WOOD #10 X 1.00 UOC: LAD, LWD,		4
21	PAOZZ	19207	12416450	.PLATE, RETAINING, SHA UOC: LAD, LWD,		2

(1) ITEM NO	(2) SMR CODE	(3) FSCM	(4) PART NUMBER	(5) DESCRIPTION AND USABLE ON CODE (UOC)	(6) QTY
22	PAOZZ	96906	MS35307-335	.BOLT, MACHINE 5/16-18 X 1 1/8 UOC: LAD, LWD,	2
23	PAOZZ	96906	MS15795-812	.WASHER, FLAT 11/32 UOC: LAD, LWD,	11
24	PAOZZ	19220	4303	.HANDLE, BOW UOC: LAD, LWD,	1
25	PAOZZ	80063	SM-C-563711-13	.NUT, PLAIN, BLIND RIV UOC: LAD, LWD,	2
26	PAOZZ	19207	12421499	.HINGE ASSEMBLY UOC: LAD, LWD,	3
27	PAOZZ	96906	MS16228-5C	.NUT, SELF-LOCKING, HE 5/16-18 UOC: LAD, LWD,	9
28	PAOZZ	96906	MS35307-345	.BOLT, MACHINE 5/16-18 X 3 1/4 UOC: LAD, LWD,	6
29	PAOZZ	96906	MS35307-344	.BOLT, MACHINE 5/16-18 X 3 UOC: LAD, LWD,	3
30	PAOZZ	19207	12416382	.THUMBSCREW UOC: LAD, LWD,	1
31	PAOZZ	96906	MS15795-810	.WASHER, FLAT UOC: LAD, LWD,	1
32	PAOZZ	80063	SM-B-650093	.EYE, PADLOCK UOC: LAD, LWD,	1
33	PAOZZ	19207	12416449-001	.HANDLE, MACHINED UOC: LAD, LWD,	1
34	PAOZZ	96906	MS171658	.PIN, SPRING UOC: LAD, LWD,	1
35	PAOZZ	19207	12416455	.SHAFT UOC: LAD, LWD,	1
36	PAOZZ	96906	MS29513-115	.O-RING UOC: LAD, LWD,	1
37	PAOZZ	19207	12416448	.SPACER, SLEEVE UOC: LAD, LWD,	1
38	PAOZZ	19207	12416566	.COVER, LOUVER UOC: LAD, LWD,	1
39	PAOZZ	19207	12416565	.LOUVER, VAN ASSY UOC: LAD, LWD,	1
40	PAOZZ	96906	MS35751-164	.BOLT, SQUARE NECK 5/18-11 X 5 1/8 UOC: LAD, LWD,	2

END OF FIGURE

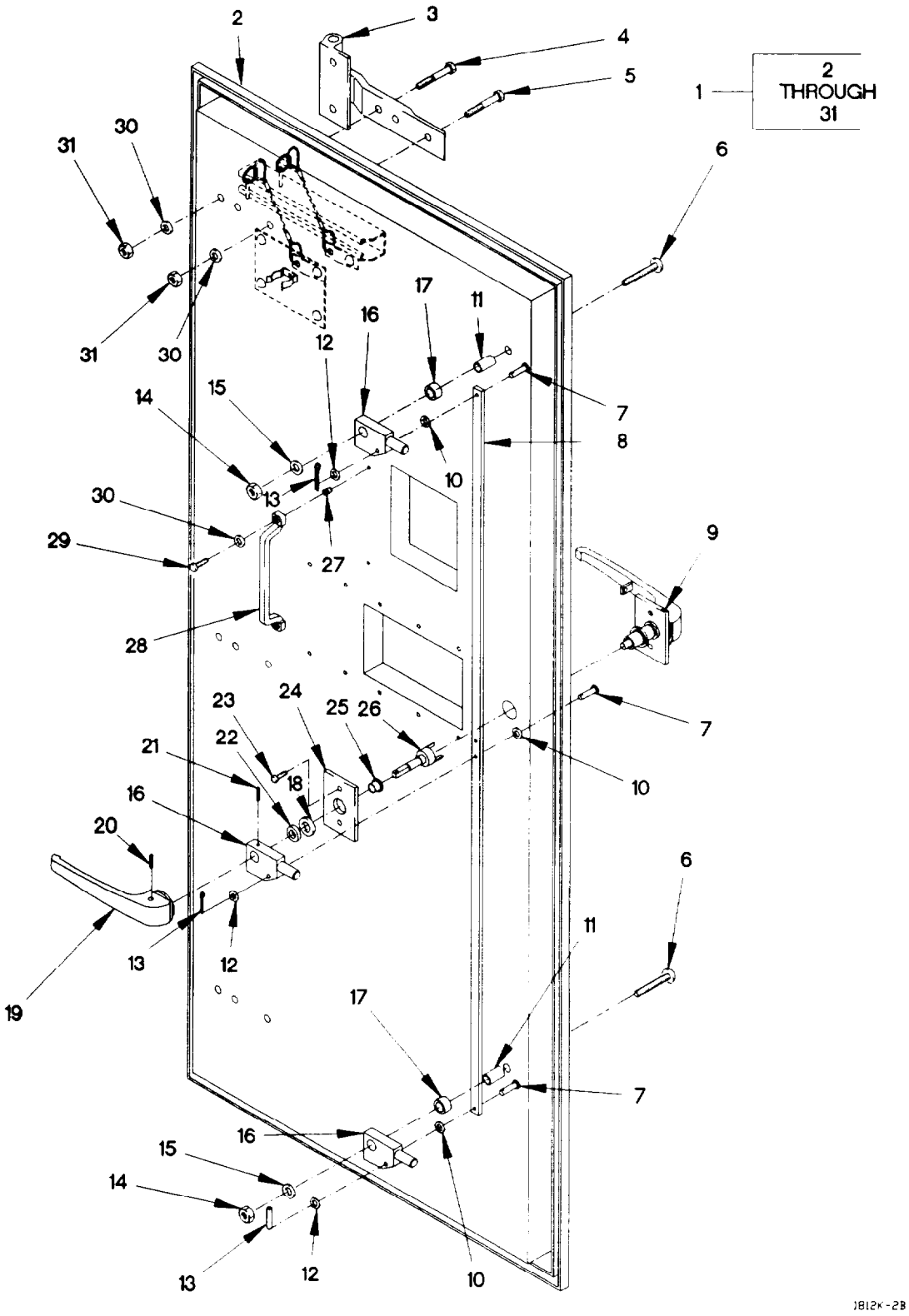

Figure 219. Van RH Door, Window and Blackout Shield (Sheet 1 of 3)

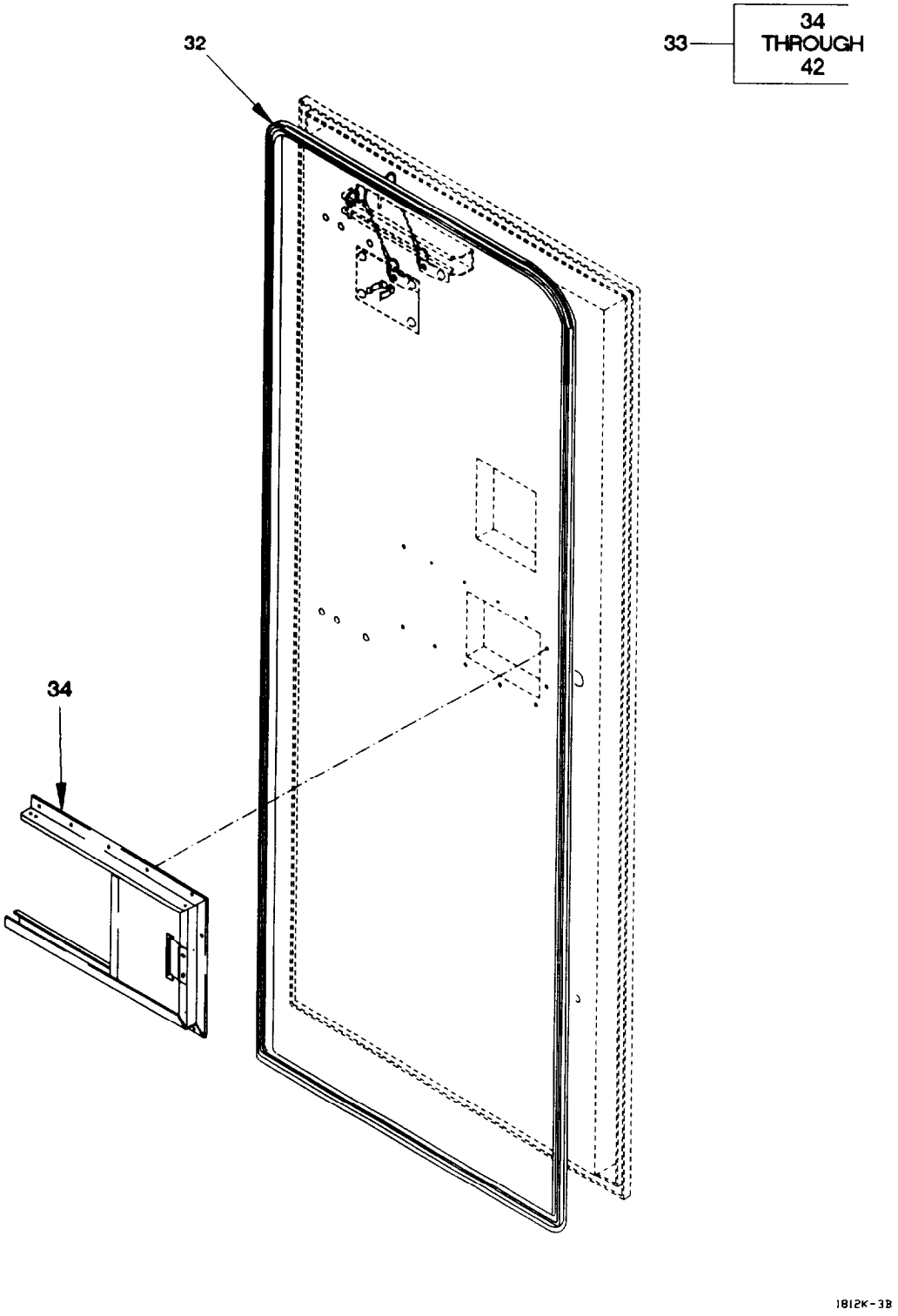

Figure 219. Van RH Door, Window and Blackout Shield (Sheet 2 of 3)

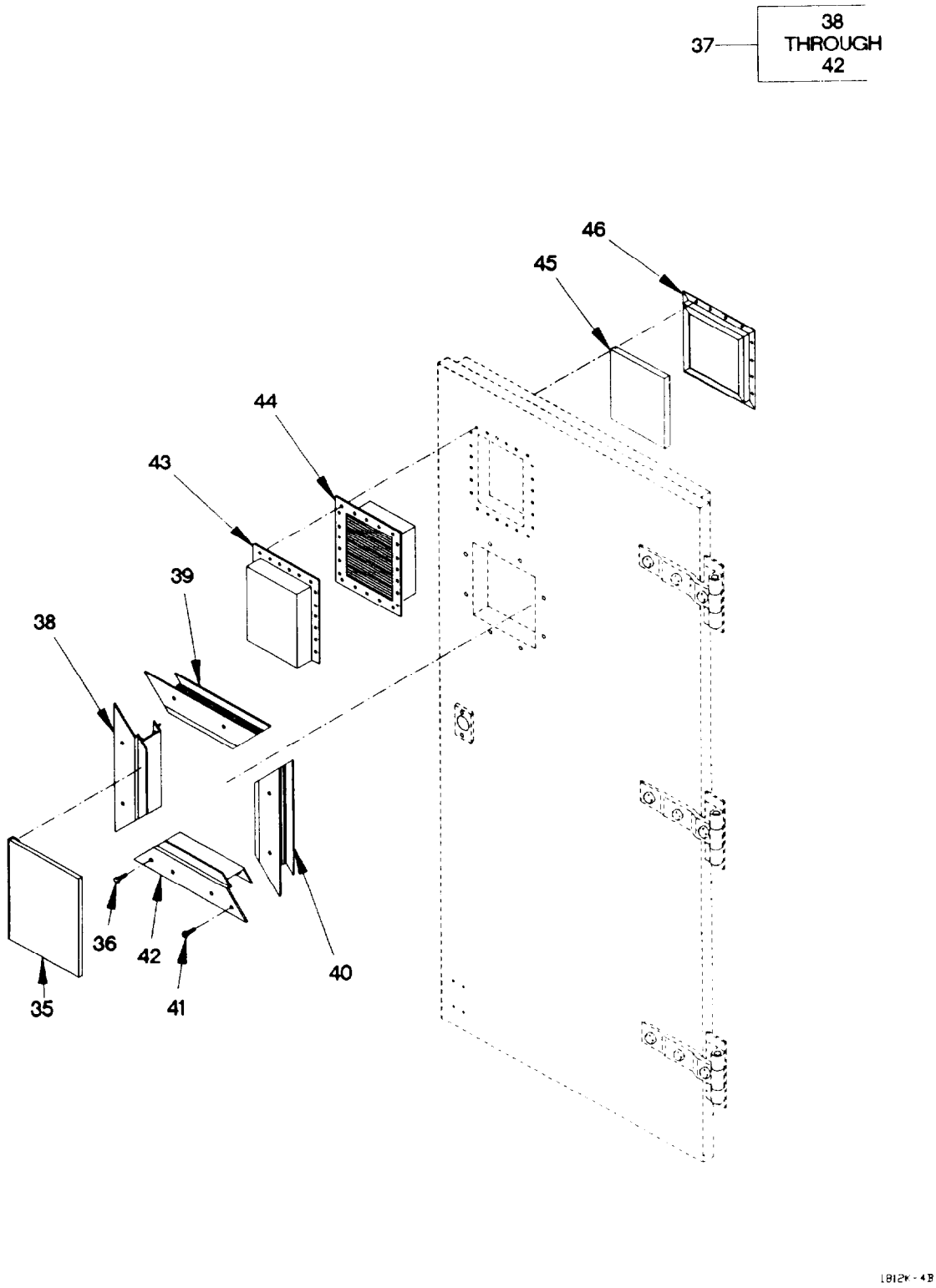

Figure 219. Van RH Door, Window and Blackout Shield (Sheet 3 of 3)

(1) ITEM NO	(2) SMR CODE	(3) FSCM	(4) PART NUMBER	(5) DESCRIPTION AND USABLE ON CODE (UOC)	(6) QTY
				GROUP 1812: SPECIAL PURPOSE BODIES FIG. 219 VAN RH DOOR, WINDOW AND BLACKOUT SHIELD	
1	PAOOO	19207	12421580	DOOR ASSEMBLY, RIGHT USED ON VAN BODY S/N 191 AND SUBSEQUENT UOC: LAD, LWD,	1
2	XAOZZ	19207	12421525	.PANEL, DOOR RIGHT UOC: LAD, LWD,	1
3	PAOZZ	19207	12421499	.HINGE ASSEMBLY UOC: LAD, LWD,	3
4	PAOZZ	96906	MS35307-345	.BOLT, MACHINE 5/16-18 X 3 1/4 UOC: LAD, LWD,	6
5	PAOZZ	96906	MS35307-344	.BOLT, MACHINE 5/16-18 X 3 UOC: LAD, LWD,	3
6	PAOZZ	96906	MS35751-164	.BOLT, SQUARE NECK 5/8-11 X 5 1/8 UOC: LAD, LWD,	2
7	PAOZZ	96906	MS20392-3C45	.PIN, STRAIGHT, HEADED UOC: LAD, LWD,	3
8	PAOZZ	19207	12416447	.CONNECTING LINK, RIG UOC: LAD, LWD,	1
9	PAOZZ	19207	12421524	.HANDLE ASSEMBLY, OUTSIDE UOC: LAD, LWD,	1
10	PAOZZ	88044	AN960C416L	.WASHER, FLAT 1/4 UOC: LAD, LWD,	3
11	PAOZZ	0FW39	12416443	.SPACER, SLEEVE UOC: LAD, LWD,	2
12	PAOZZ	73287	WW519S18	.WASHER, SPRING TENSI 25/32 UOC: LAD, LWD,	2
13	PAOZZ	96906	MS171659	.PIN, SPRING UOC: LAD, LWD,	3
14	PAOZZ	96906	MS16228-10C	.NUT, SELF-LOCKING, HE 5/8-11 UOC: LAD, LWD,	2
15	PAOZZ	96906	MS15795-820	.WASHER, FLAT 21/32 UOC: LAD, LWD,	2
16	PAOZZ	0FW39	12416376	.LATCH, DOOR, VEHICULA UOC: LAD, LWD,	3
17	PAOZZ	0FW39	12416444-002	.SPACER, RING UOC: LAD, LWD,	2
18	PAOZZ	81337	5-4-3101	.WASHER, DOORLATCH UOC: LAD, LWD,	1
19	PAOZZ	19207	12421521	.HANDLE, INSIDE UOC: LAD, LWD,	1
20	PAOZZ	96906	MS16562-238	.PIN, SPRING UOC: LAD, LWD,	1
21	PAOZZ	96906	MS16562-240	.PIN, SPRING UOC: LAD, LWD,	1

(1) ITEM NO	(2) SMR CODE	(3) FSCM	(4) PART NUMBER	(5) DESCRIPTION AND USABLE ON CODE (UOC)	(6) QTY
22	PAOZZ	19207	12416444-004	.SPACER UOC: LAD, LWD,	1
23	PAOZZ	96906	MS24625-47	.SCREW, TAPPING 10 X 1 IN UOC: LAD, LWD,	6
24	XDOZZ	19207	12421515	.PLATE, DOOR HANDLE UOC: LAD, LWD,	1
25	PAOZZ	81337	5-4-3106	.BUSHING, SLEEVE UOC: LAD, LWD,	1
26	PAOZZ	19207	12421514	.SHAFT, DOOR UOC: LAD, LWD,	1
27	PAOZZ	80063	SM-C-563711-13	.NUT, PLAIN, BLIND RIV UOC: LAD, LWD,	2
28	PAOZZ	19220	4303	.HANDLE, BOW UOC: LAD, LWD,	1
29	PAOZZ	96906	MS35307-335	BOLT, MACHINE 5/16-18 X 1 1/8 UOC: LAD, LWD,	2
30	PAOZZ	96906	MS15795-812	.WASHER, FLAT 11/32 UOC: LAD, LWD,	11
31	PAOZZ	96906	MS16228-5C	.NUT, SELF-LOCKING, HE 5/16-18 UOC: LAD, LWD,	9
32	MOOZZ	19207	12416417	.GASKET, SILICONE MAKE FROM SILICONE RUBBER, IAW ZZ-R-765, CLASS 3B, GRADE 50 UOC: LAD, LWD,	1
33	PAOOO	0SHR6	110F00966	.WINDOW ASSEMBLY UOC: LAD, LWD,	1
34	PAOOO	0SHR6	61S00086	. .SHIELD, BLACKOUT, ASS UOC: LAD, LWD,	1
35	PAOZZ	0SHR6	60P01995	. .GLASS UOC: LAD, LWD,	1
36	PAOZZ	0SHR6	233W08075	. .SCREW, PHP #8 X .75 UOC: LAD, LWD,	12
37	XDOOO	0SHR6	126S00006	. .FRAME ASSEMBLY UOC: LAD, LWD,	1
38	XDOZZ	0SHR6	126E00004	. . .FRAME LEFT UOC: LAD, LWD,	1
39	XDOZZ	0SHR6	126E00002	. . .FRAME, TOP HEADER UOC: LAD, LWD,	1
40	XDOZZ	0SHR6	126E00005	. . .FRAME RIGHT UOC: LAD, LWD,	1
41	PAOZZ	96906	MS24630-36	. . .SCREW, TAPPING #8 X .50 UOC: LAD, LWD,	8
42	XDOZZ	0SHR6	126E00003	. . .FRAME BOTTOM UOC: LAD, LWD,	1
43	XDOZZ	19207	12421516	.COVER, VENT UOC: LAD, LWD,	1

(1) ITEM NO	(2) SMR CODE	(3) FSCM	(4) PART NUMBER	(5) DESCRIPTION AND USABLE ON CODE (UOC)	(6) QTY
44	PAOZZ	19207	12416565	.LOUVER, VAN ASSY UOC: LAD, LWD,	1
45	PAOZZ	0FW39	12416563	.STRAINER ELEMENT, SE UOC: LAD, LWD,	1
46	PAOZZ	19207	12416557	.RETAINER, FILTER, AIR UOC: LAD, LWD,	1

END OF FIGURE

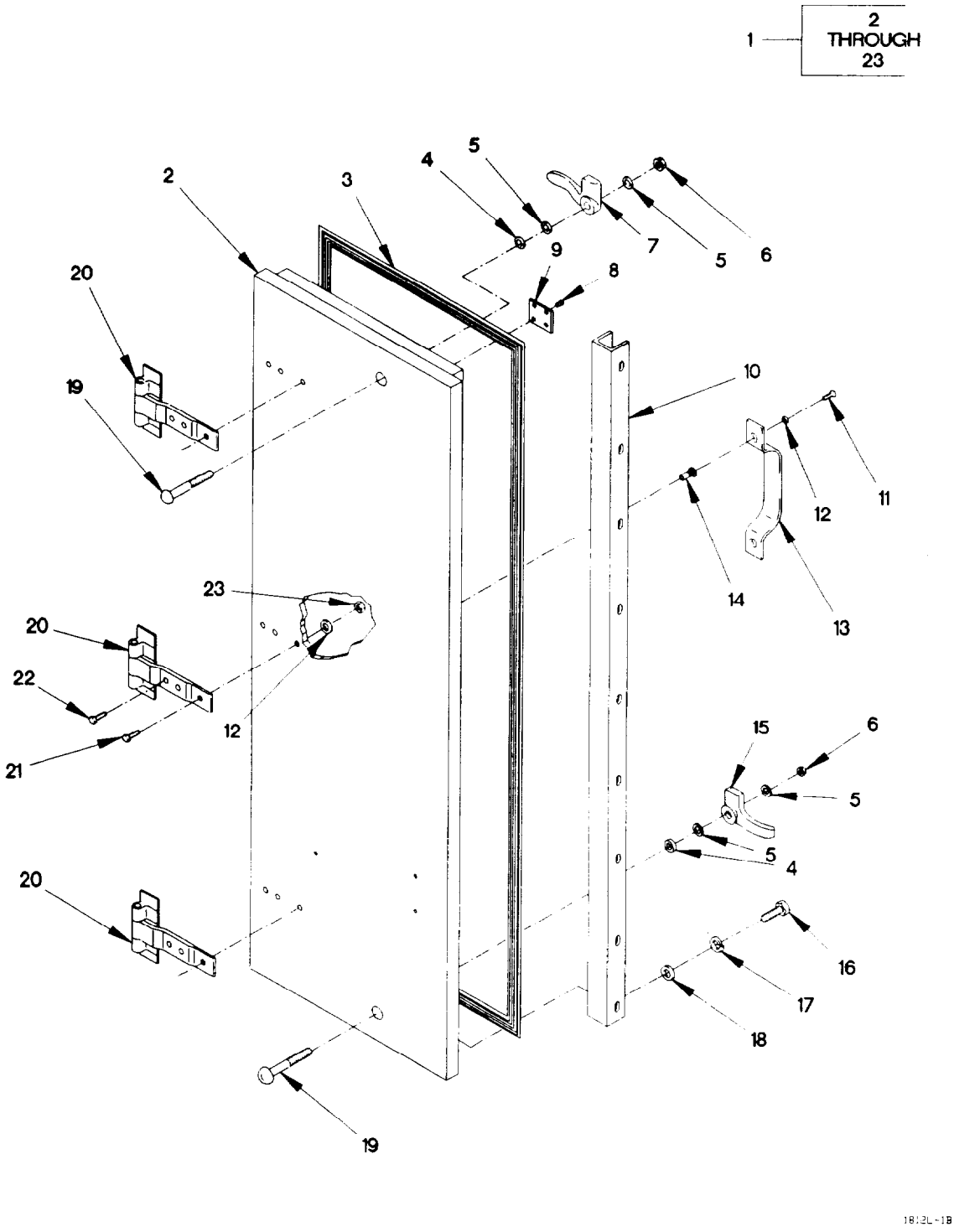

Figure 220. Van LH Door Assembly

(1) ITEM NO	(2) SMR CODE	(3) FSCM	(4) PART NUMBER	(5) DESCRIPTION AND USABLE ON CODE (UOC)		(6) QTY
				GROUP 1812: SPECIAL PURPOSE BODIES FIG. 220 VAN LH DOOR ASSEMBLY		
1	PAOOO	19207	12416372	DOOR, ACCESS LEFT UOC: LAD, LWD,		1
2	XAOZZ	19207	12416367	.PANEL, DOOR UOC: LAD, LWD,		1
3	MOOZZ	19207	12416417	.GASKET, SILICONE MAKE FROM SILICONE RUBBER, IAW ZZ-R-765, CLASS 3B, GRADE 50 UOC: LAD, LWD,	V	
4	PAOZZ	19207	12421651-001	.SPACER UOC: LAD, LWD,		2
5	PAOZZ	96906	MS15795-820	.WASHER, FLAT 21/32 UOC: LAD, LWD,		4
6	PAOZZ	96906	MS16228-10C	.NUT, SELF-LOCKING, HE 5/8-11 UOC: LAD, LWD,		2
7	PAOZZ	19207	12416603-002	.LATCH, DOOR, VEHICULA UOC: LAD, LWD,		1
8	PAOZZ	25472	S8B161	.NUT, PLAIN, BLIND RIV UOC: LAD, LWD,		4
9	PAOZZ	0FW39	12416372-002	.STIFFNER PLATE UOC: LAD, LWD,		1
10	PAOZZ	19207	12416384	.MULLION UOC: LAD, LWD,		1
11	PAOZZ	96906	MS35307-335	.BOLT, MACHINE 5/16-18 X 1 1/8 UOC: LAD, LWD,		2
12	PAOZZ	96906	MS15795-812	.WASHER, FLAT 11/32 UOC: LAD, LWD,		11
13	PAOZZ	19220	4302	.HANDLE, MANUAL CONTR UOC: LAD, LWD,		1
14	PAOZZ	80063	SM-C-563711-13	.NUT, PLAIN, BLIND RIV UOC: LAD, LWD,		2
15	PAOZZ	0FW39	12416603-001	.LATCH, DOOR, VEHICULA UOC: LAD, LWD,		1
16	PAOZZ	96906	MS51957-65	.SCREW, MACHINE #10-24 X 3/4 UOC: LAD, LWD,		9
17	PAOZZ	96906	MS35338-138	.WASHER, LOCK #10 UOC: LAD, LWD,		9
18	PAOZZ	96906	MS15795-847	.WASHER, FLAT NO. 10 UOC: LAD, LWD,		9
19	PAOZZ	96906	MS35751-164	.BOLT, SQUARE NECK 5/8-11 X 5 1/8 UOC: LAD, LWD,		2
20	PAOZZ	19207	12421499	.HINGE ASSEMBLY UOC: LAD, LWD,		3

(1) ITEM NO	(2) SMR CODE	(3) FSCM	(4) PART NUMBER	(5) DESCRIPTION AND USABLE ON CODE (UOC)	(6) QTY
21	PAOZZ	96906	MS35307-344	.BOLT, MACHINE 5/16-18 X 3 UOC: LAD, LWD,	3
22	PAOZZ	96906	MS35307-345	.BOLT, MACHINE 5/16-18 X 3 1/4 UOC: LAD, LWD,	6
23	PAOZZ	96906	MS16228-5C	.NUT, SELF-LOCKING, HE 5/16-18 UOC: LAD, LWD,	9

END OF FIGURE

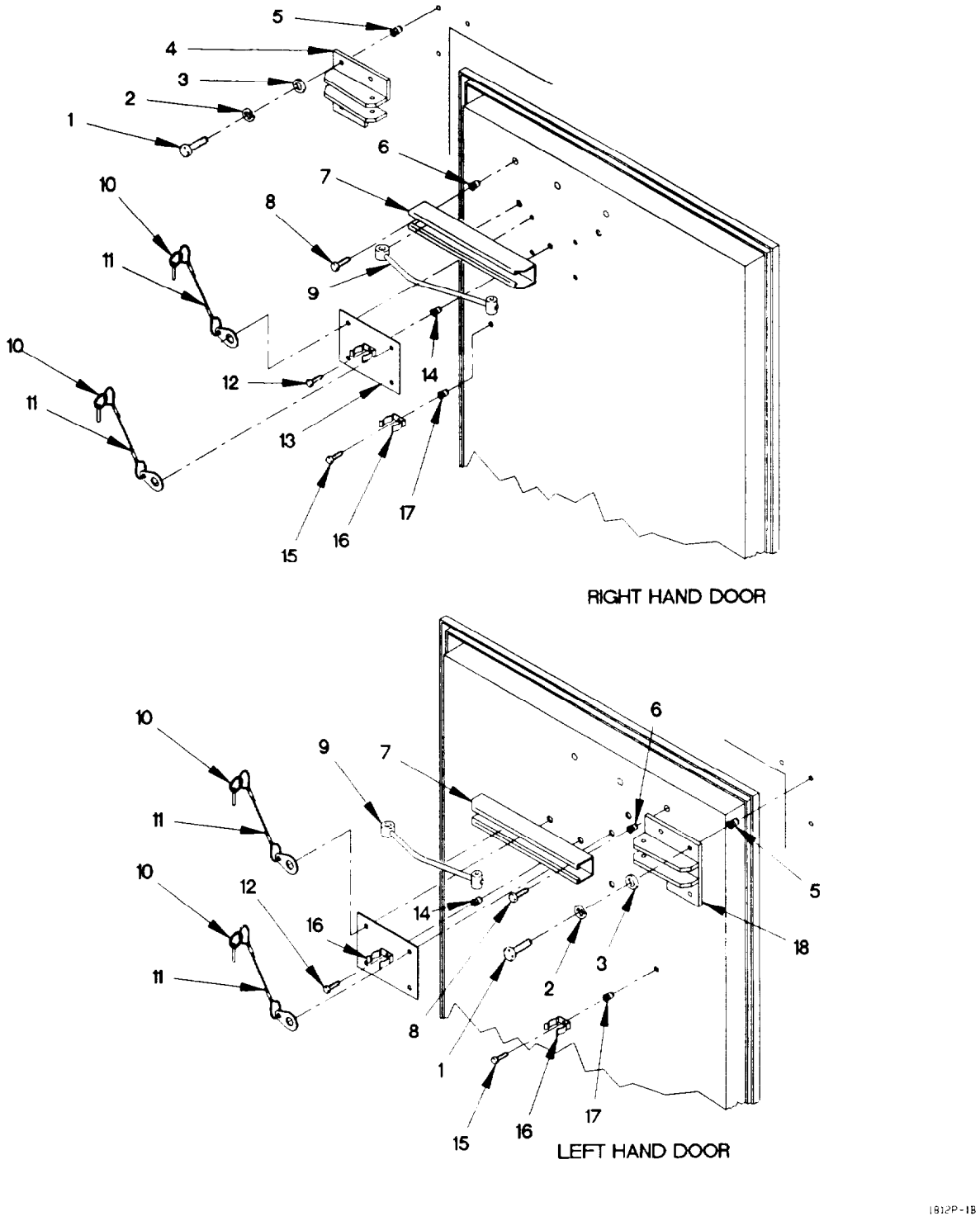

Figure 221. Van Door Check Assembly

(1) ITEM NO	(2) SMR CODE	(3) FSCM	(4) PART NUMBER	(5) DESCRIPTION AND USABLE ON CODE (UOC)	(6) QTY
				GROUP 1812: SPECIAL PURPOSE BODIES	
				FIG. 221 VAN DOOR CHECK ASSEMBLY	
1	PAOZZ	96906	MS35307-308	SCREW, CAP, HEXAGON H 1/4-20 X 5/8	6
				UOC: LAD, LWD,	
2	PAOZZ	96906	MS35338-158	WASHER, LOCK 1/4	6
				UOC: LAD, LWD,	
3	PAOZZ	96906	MS15795-852	WASHER, FLAT 17/64	6
				UOC: LAD, LWD,	
4	PAOZZ	19207	12416387	BRACKET, DOOR STAY	1
				UOC: LAD, LWD,	
5	PAOZZ	96906	MS27130-S34	NUT, PLAIN, BLIND RIV	6
				UOC: LAD, LWD,	
6	PAOZZ	96906	MS27130S135	NUT, PLAIN, BLIND RIV	6
				UOC: LAD, LWD,	
7	PAOZZ	19207	12416386	CHANNEL ASSY	2
				UOC: LAD, LWD,	
8	PAOZZ	96906	MS51957-81	SCREW, MACHINE 1/4-20 X 3/4	6
				UOC: LAD, LWD,	
9	PFOZZ	19207	12416388	ROD, STAY ARM	2
				UOC: LAD, LWD,	
10	PAOZZ	81349	M45952/1C4-16	PIN, QUICK RELEASE	4
				UOC: LAD, LWD,	
11	PAOZZ	84256	LT1504C6-16	WIRE ROPE ASSEMBLY,	4
				UOC: LAD, LWD,	
12	PAOZZ	96906	MS51957-28	SCREW, MACHINE #6-32 X 3/8	2
				UOC: LAD, LWD,	
13	PAOZZ	19207	12416573	PLATE, MOUNTING	2
				UOC: LAD, LWD,	
14	PAOZZ	25472	S6-160	NUT, PLAIN, BLIND, RIV	2
				UOC: LAD, LWD,	
15	PAOZZ	96906	MS51957-30	SCREW, MACHINE #6-32 X 1/2	2
				UOC: LAD, LWD,	
16	PAOZZ	92026	2B	CLIP, SPRING TENSION	4
				UOC: LAD, LWD,	
17	PAOZZ	80063	SM-A-937236S2B1	NUT, PLAIN, BLIND RIV	2
				UOC: LAD, LWD,	
18	PAOZZ	19207	12416389	BRACKET, DOOR STAY	1
				UOC: LAD, LWD,	
				END OF FIGURE	

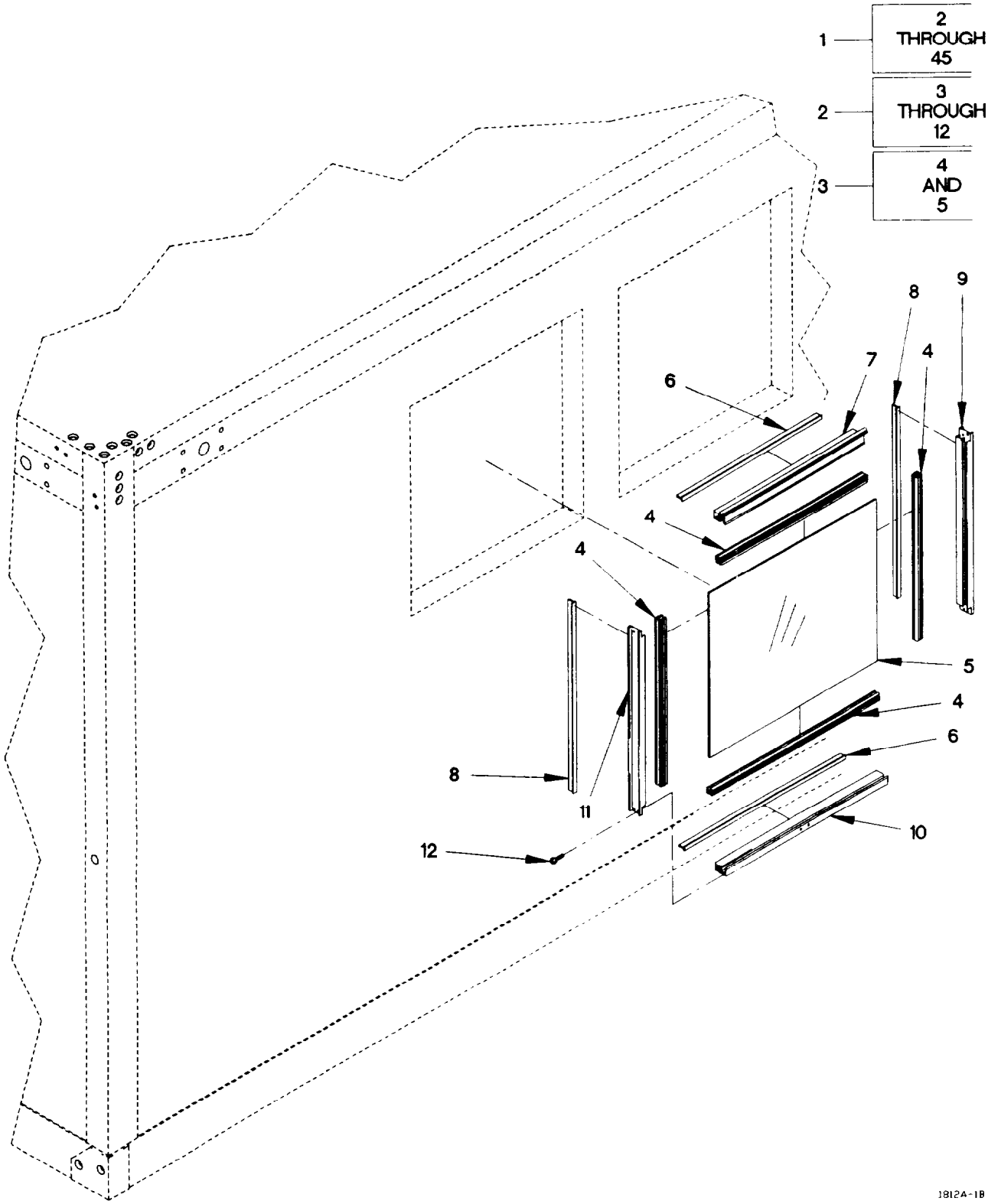

Figure 222. Van Large Window Assembly (Sheet 1 of 3)

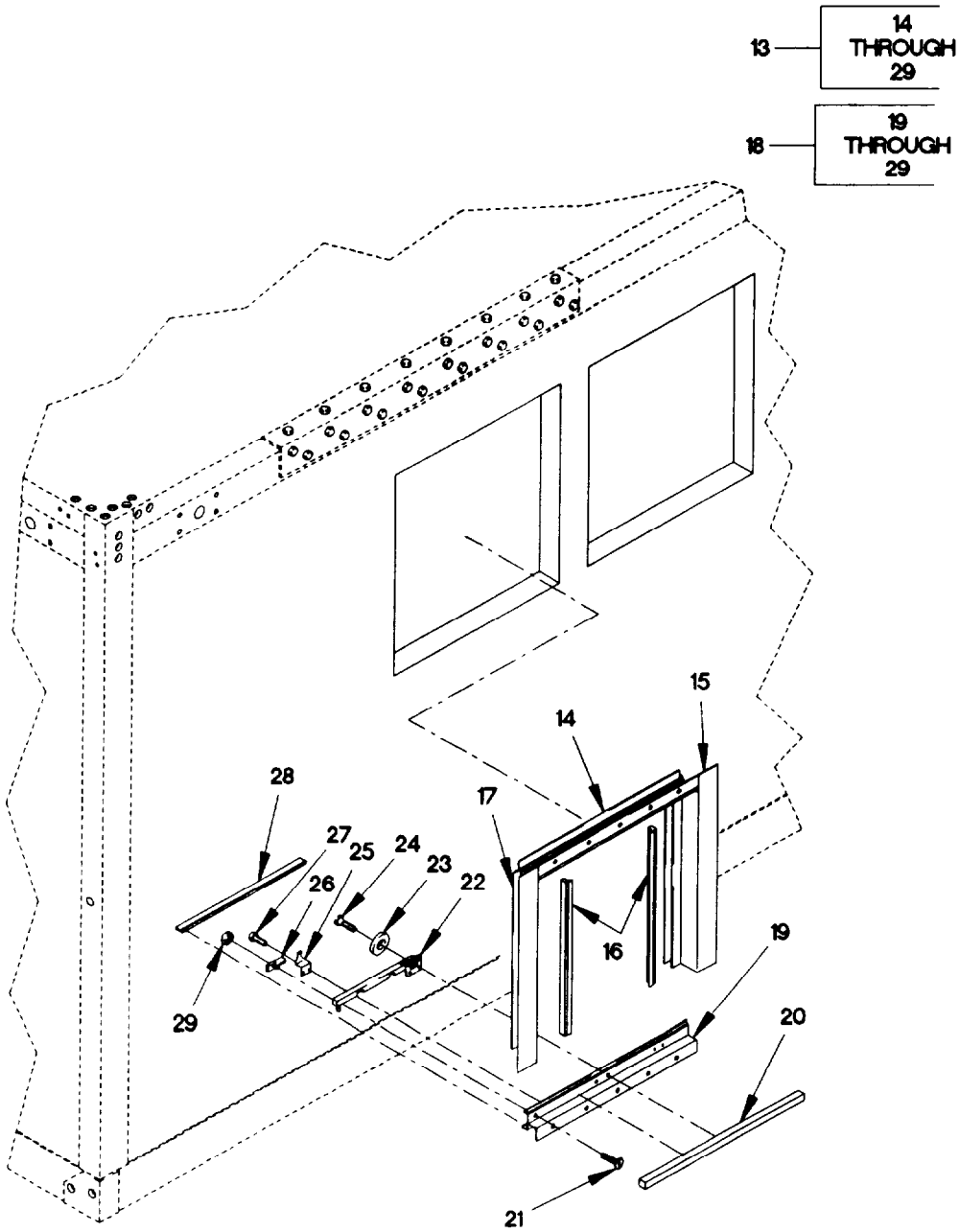

Figure 222. Van Large Window Assembly (Sheet 2 of 3)

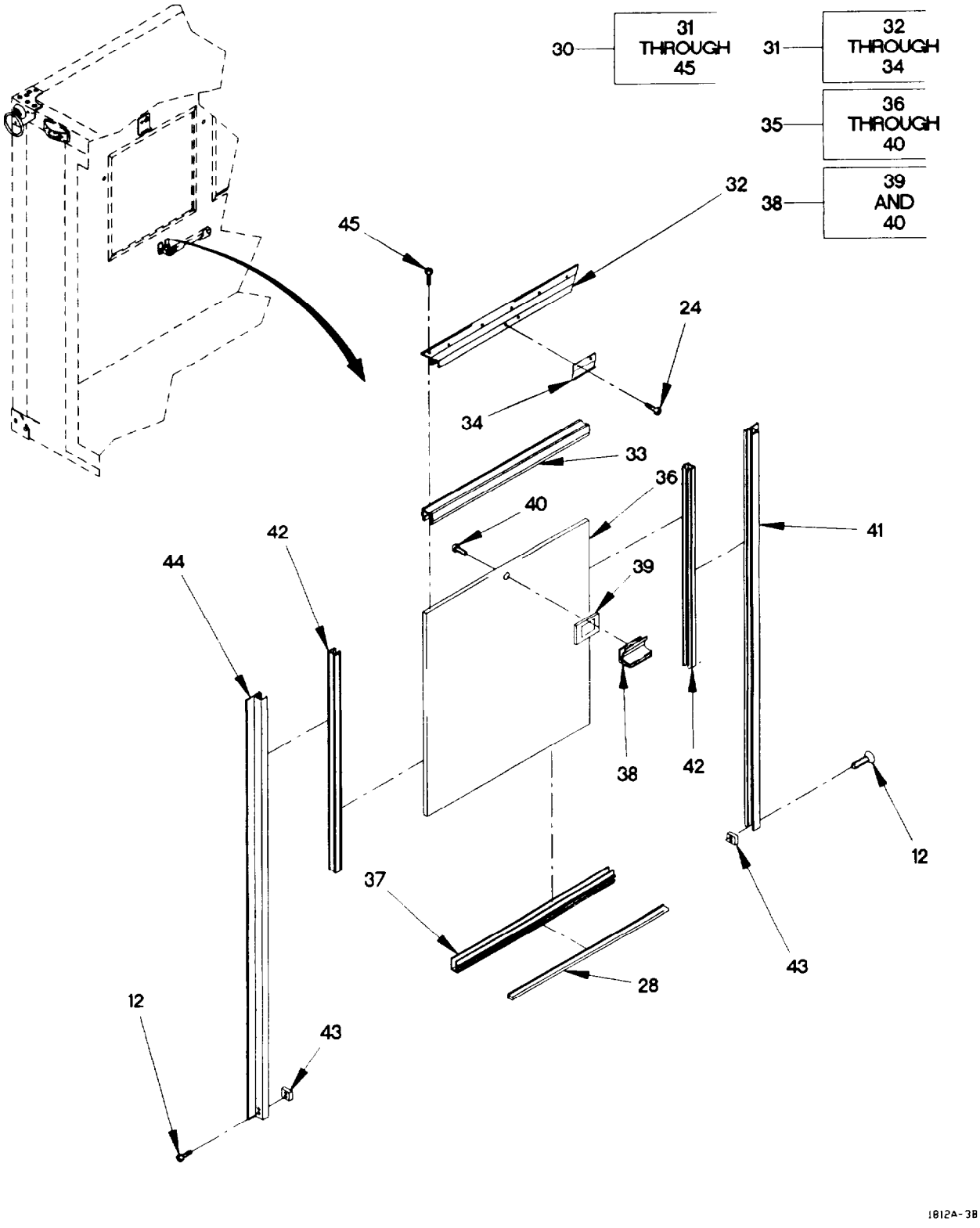

Figure 222. Van Large Window Assembly (Sheet 3 of 3)

(1) ITEM NO	(2) SMR CODE	(3) FSCM	(4) PART NUMBER	(5) DESCRIPTION AND USABLE ON CODE (UOC)		(6) QTY
				GROUP 1812: SPECIAL PURPOSE BODIES		
				FIG. 222 VAN LARGE WINDOW ASSEMBLY		
1	PAOOO	0SHR6	110F00614	WINDOW ASSEMBLY		5
				UOC: LAD, LWD,		
2	PAOOO	0SHR6	60S00478	.ASSEMBLY, SASH		1
				UOC: LAD, LWD,		
3	PAOOO	0SHR6	60S01354	. .ASSEMBLY, GLASS		1
				UOC: LAD, LWD,		
4	MOOZZ	0SHR6	141P00075	. . .GLAZING, PVC	V	
				UOC: LAD, LWD,		
5	PAOZZ	0SHR6	60P00477	. . .GLASS		1
				UOC: LAD, LWD,		
6	PAOZZ	0SHR6	147P00040	. .SEAL, WEATHER		2
				UOC: LAD, LWD,		
7	PAOZZ	0SHR6	138P00002	. .SASH, HEADER HEADER		1
				UOC: LAD, LWD,		
8	PAOZZ	0SHR6	147P00041	. .SEAL, WEATHER		2
				UOC: LAD, LWD,		
9	PAOZZ	0SHR6	139P00003	. .SASH, JAMB RH RIGHT JAMB		1
				UOC: LAD, LWD,		
10	PAOZZ	0SHR6	108P00002	. .SASH, JAMB BOTTOM BOTTOM		1
				UOC: LAD, LWD,		
11	PAOZZ	0SHR6	139P00002	. .SASH, JAMB LH LEFT JAMB		1
				UOC: LAD, LWD,		
12	PAOZZ	96906	MS24630-36	. .SCREW, TAPPING #8 X .50 PHP		8
				UOC: LAD, LWD,		
13	PAOZZ	0SHR6	135S00003	.ASSY, MAIN FRAME		1
				UOC: LAD, LWD,		
14	PAOZZ	0SHR6	135P00002	. .FRAME, TOP HEADER		1
				UOC: LAD, LWD,		
15	PAOZZ	0SHR6	136P00003	. .FRAME, JAMB RH RH		1
				UOC: LAD, LWD,		
16	PAOZZ	0SHR6	157P00003	. .SEAL, WEATHER		2
				UOC: LAD, LWD,		
17	PAOZZ	0SHR6	136P00002	. .FRAME, JAMB LH LH		1
				UOC: LAD, LWD,		
18	PAOOO	0SHR6	137S00003	. .FRAME, BOTTOM, ASSEMB BOTTOM		1
				UOC: LAD, LWD,		
19	PAOZZ	0SHR6	137P00002	. . .FRAME BOTTOM HEADER		1
				UOC: LAD, LWD,		
20	PAOZZ	0SHR6	155P00003	. . .SEAL, HORIZONTAL		1
				UOC: LAD, LWD,		
21	PAOZZ	0SHR6	245W10063	. . .SCREW, FHP #10/24 X .63 FHP		1
				UOC: LAD, LWD,		
22	PAOZZ	0SHR6	13S00012	. . .LATCH AND PROP		1
				UOC: LAD, LWD,		

(1) ITEM NO	(2) SMR CODE	(3) FSCM	(4) PART NUMBER	(5) DESCRIPTION AND USABLE ON CODE (UOC)	(6) QTY
23	PAOZZ	0SHR6	331W08000	. . .WASHER, COUNTERSINK #8 UOC: LAD, LWD,	2
24	PAOZZ	0SHR6	232W08050	. . .SCREW, DHP #8 X .50 PHP UOC: LAD, LWD,	2
25	PAOZZ	0SHR6	33P00010	. . .LATCH, PROP ROD UOC: LAD, LWD,	1
26	PAOZZ	0SHR6	33P00011	. . .KEEPER, PROP ROD UOC: LAD, LWD,	1
27	PAOZZ	0SHR6	232W08038	. . .SCREW, PHP #8 X .38 PHP UOC: LAD, LWD,	2
28	PAOZZ	0SHR6	147P00039	. . .SEAL, WEATHER UOC: LAD, LWD,	1
29	PAOZZ	0SHR6	270W10000	. . .NUT, LOCK 10/24 UOC: LAD, LWD,	1
30	PAOOO	0SHR6	61S00024	.ASSY, BLKOUT SHIELD ASSEMBLY UOC: LAD, LWD,	1
31	PAOOO	0SHR6	180S00007	. .ASSEMBLY, HEADER UOC: LAD, LWD,	1
32	PAOZZ	0SHR6	180P00002	. . .FRAME, HEADER HEADER UOC: LAD, LWD,	1
33	PAOZZ	0SHR6	142P00160	. . .GASKET JAMB UOC: LAD, LWD,	1
34	PAOZZ	0SHR6	33P00012	. . .KEEPER UOC: LAD, LWD,	1
35	PAOOO	0SHR6	61S00072	. .ASSEMBLY, POLY UOC: LAD, LWD,	1
36	PAOZZ	0SHR6	61P00025	. . .SHIELD, BLACKOUT UOC: LAD, LWD,	1
37	PAOZZ	0SHR6	193P00009	. . .BAR, MELROW UOC: LAD, LWD,	1
38	PAOOO	0SHR6	119S00003	. . .ASSEMBLY, LOCK 4 INC UOC: LAD, LWD,	1
39	PAOZZ	0SHR6	70P00002	. . . .TAPE, DOUBLE FACE UOC: LAD, LWD,	1
40	PAOZZ	0SHR6	263W08050	. . . .SCREW, DHP 8/32 X .5 DHP UOC: LAD, LWD,	1
41	PAOZZ	0SHR6	180P00003	. .FRAME, JAMB RH UOC: LAD, LWD,	1
42	PAOZZ	0SHR6	142P00161	. .RUBBER, JAMB FLOCKED UOC: LAD, LWD,	2
43	XDOZZ	0SHR6	30P00082	. .STOP UOC: LAD, LWD,	2
44	PAOZZ	0SHR6	180P00004	. .FRAME, JAMB LH LEFT UOC: LAD, LWD,	1
45	PAOZZ	0SHR6	233W08075	. .SCREW, PHP #8 X .75 PHP UOC: LAD, LWD,	4

END OF FIGURE

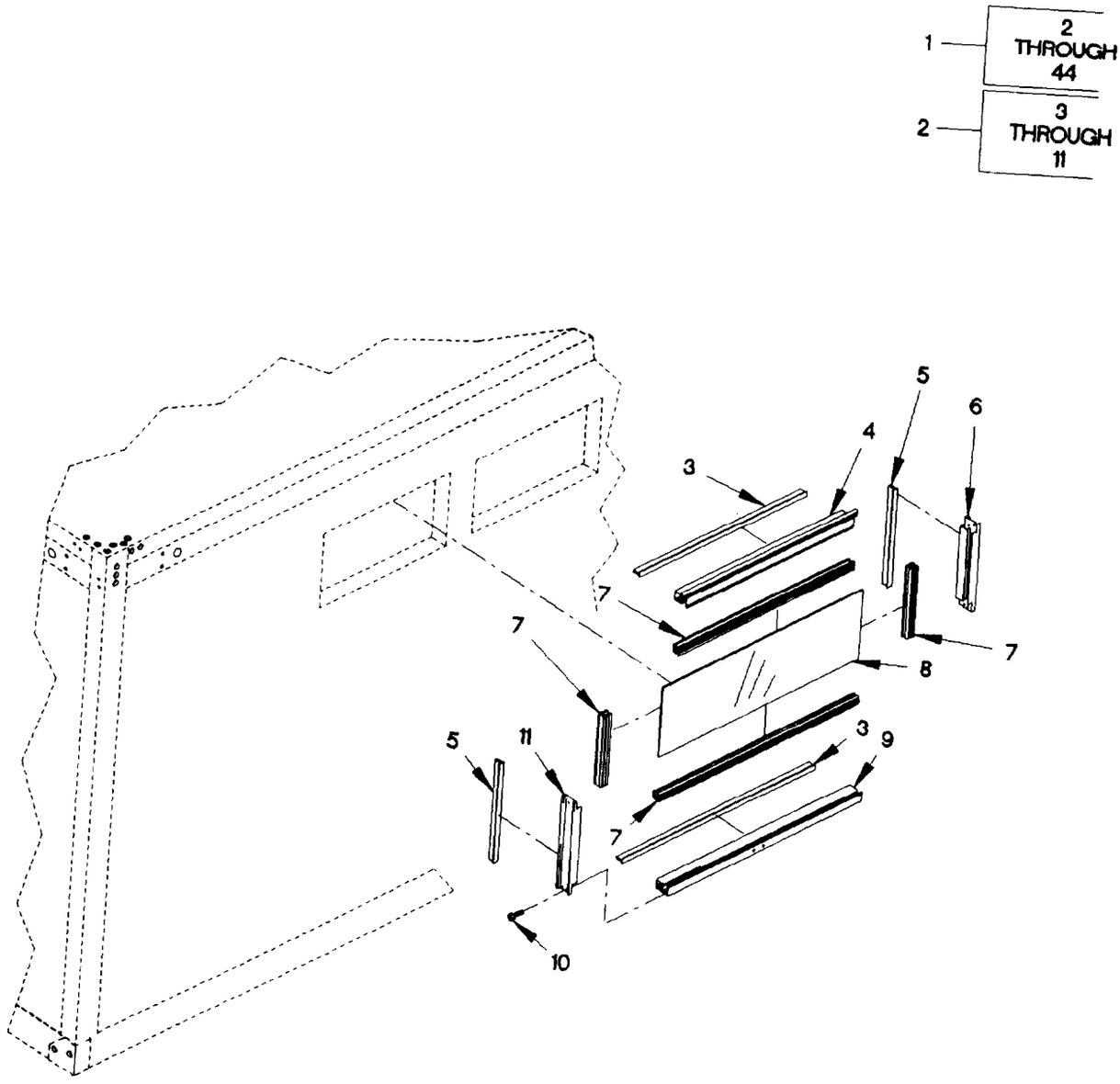

Figure 223. Van Small Window Assembly, Screen and Cover (Sheet 1 of 4)

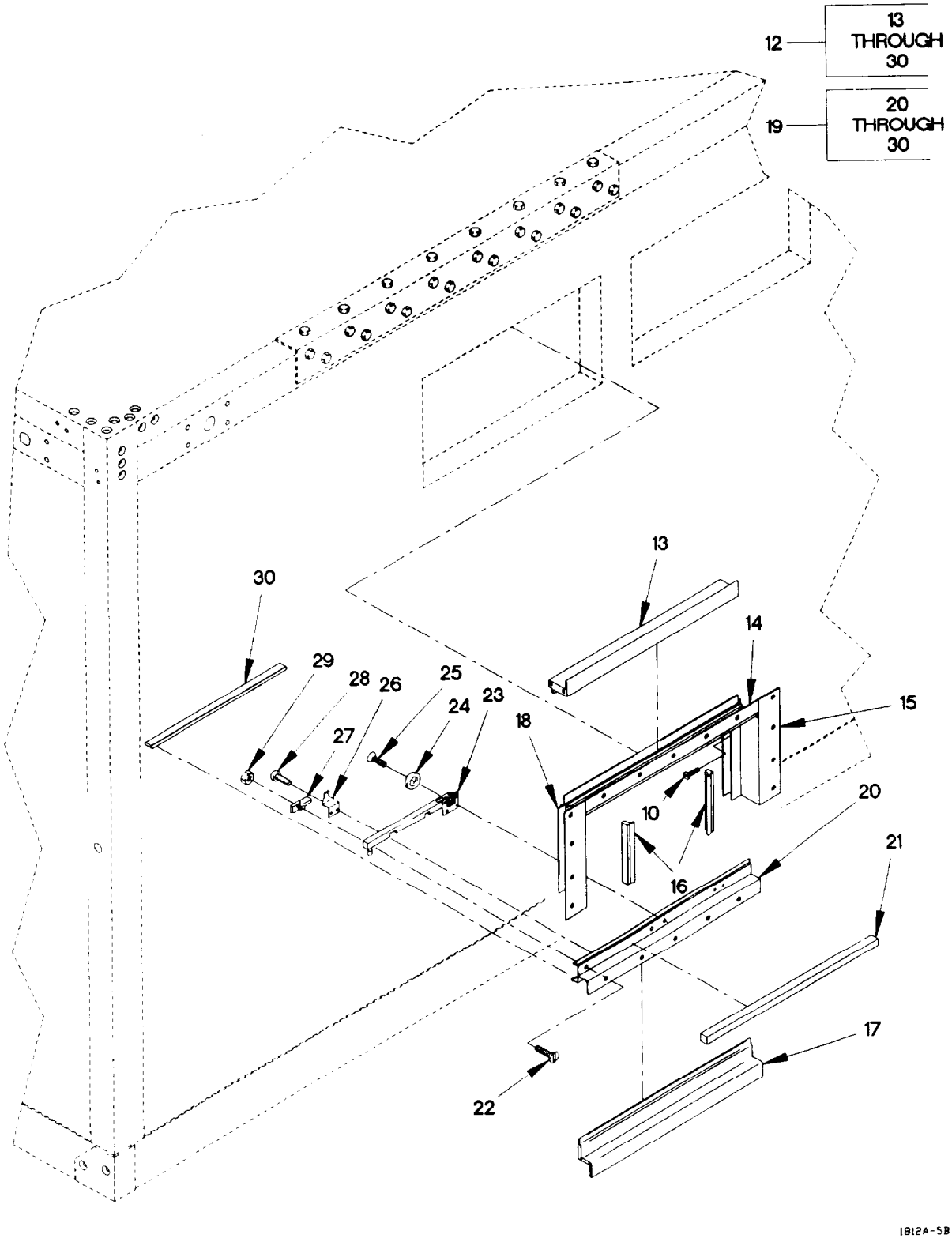

Figure 223. Van Small Window Assembly, Screen and Cover (Sheet 2 of 4)

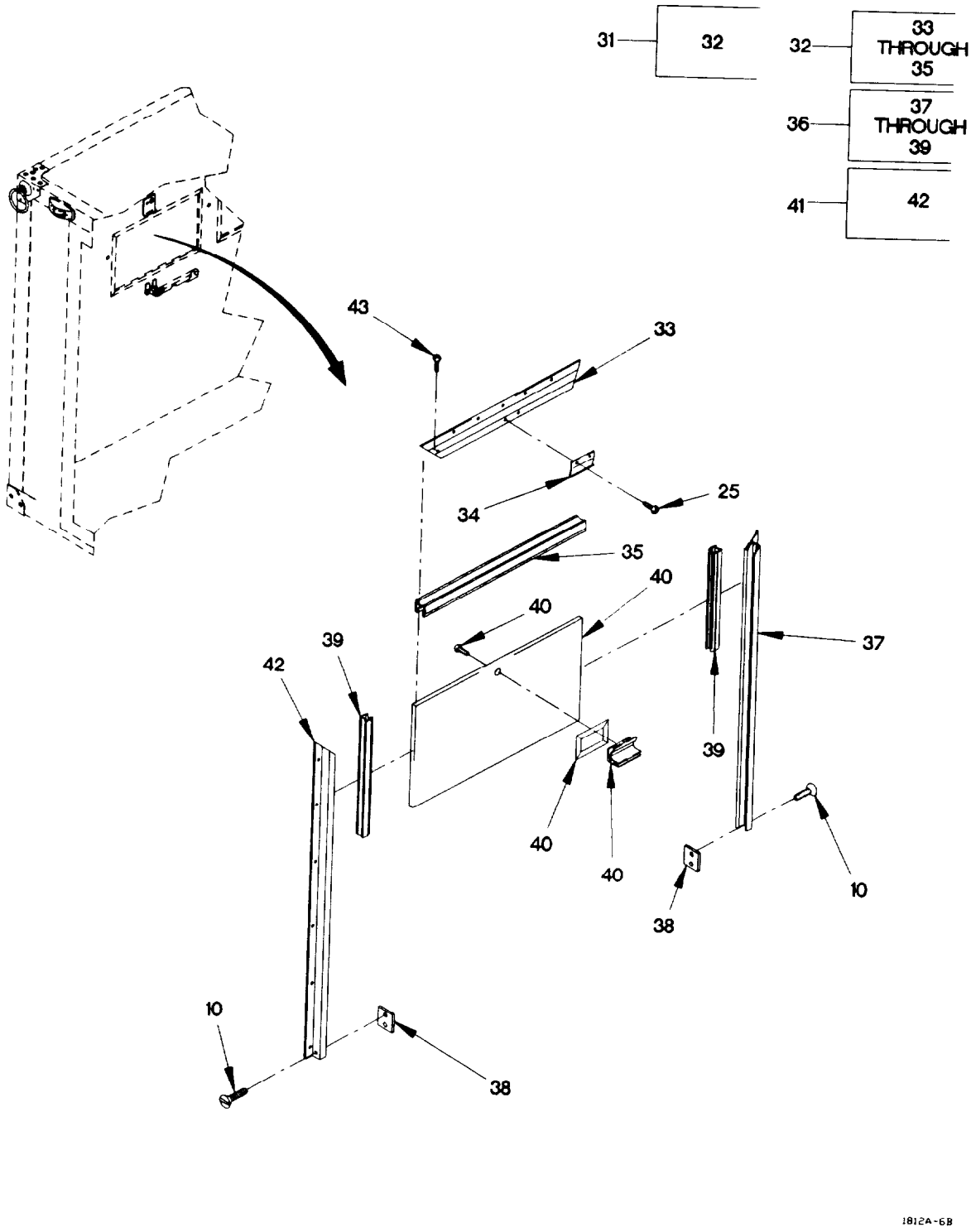

Figure 223. Van Small Window Assembly, Screen and Cover (Sheet 3 of 4)

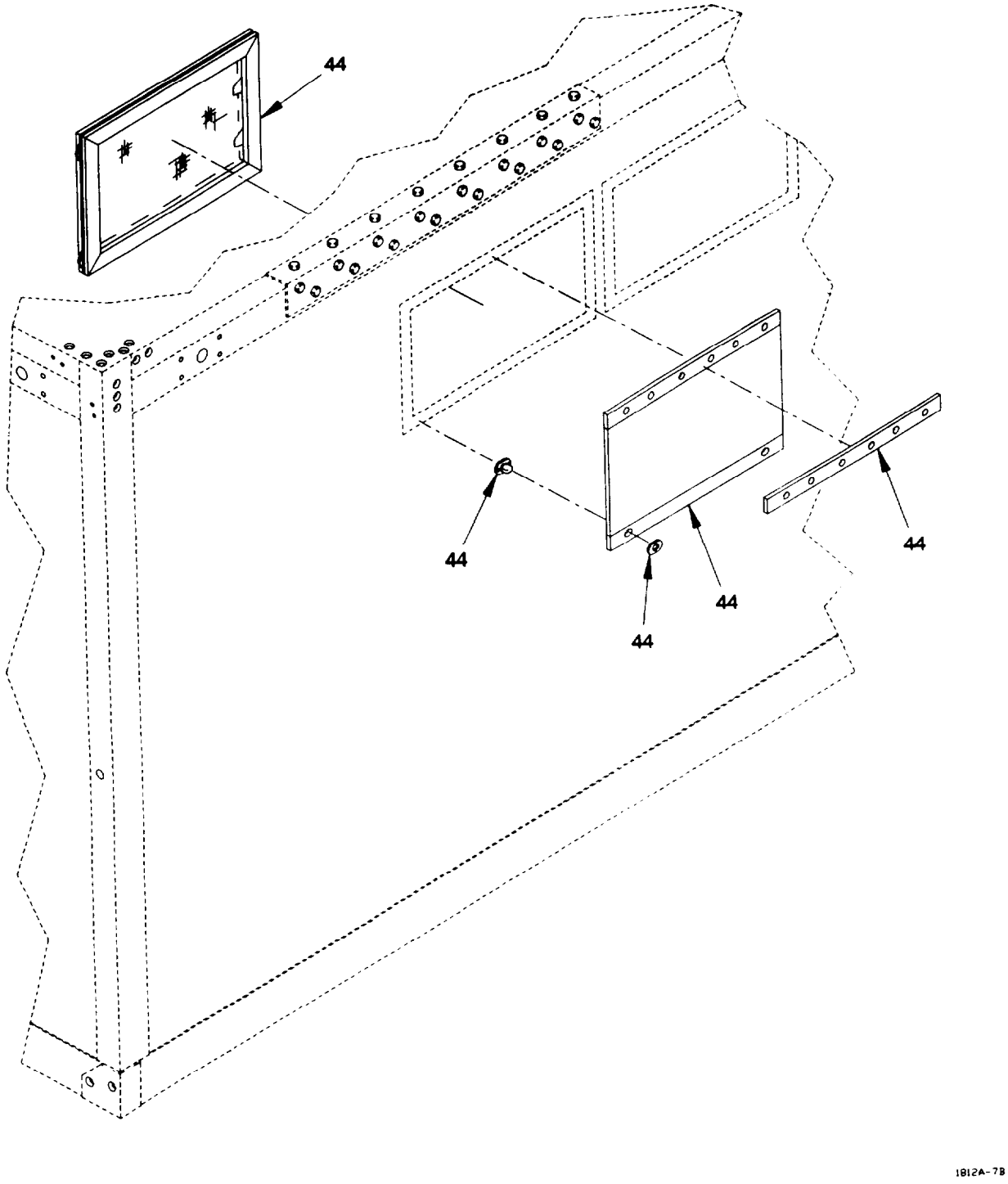

Figure 223. Van Small Window Assembly, Screen and Cover
(Sheet 4 of 4)

(1) ITEM NO	(2) SMR CODE	(3) FSCM	(4) PART NUMBER	(5) DESCRIPTION AND USABLE ON CODE (UOC)	(6) QTY
				GROUP 1812: SPECIAL PURPOSE BODIES FIG. 223 VAN SMALL WINDOW ASSEMBLY, SCREEN AND COVER	
1	PAOOO	0SHR6	110F00940	ASSEMBLY, WINDOW SMALL, USED ON VAN BODY S/N 191 AND SUBSEQUENT UOC: LAD, LWD,	4
2	PAOOO	0SHR6	60S01910	.ASSEMBLY, SASH UOC: LAD, LWD,	1
3	PAOZZ	0SHR6	147P00040	. .SEAL, WEATHER UOC: LAD, LWD,	2
4	PAOZZ	0SHR6	138P00002	. .SASH, HEADER, HEADER UOC: LAD, LWD,	1
5	PAOZZ	0SHR6	147P00131	. .SEAL, WEATHER UOC: LAD, LWD,	2
6	PAOZZ	0SHR6	139P00005	. .SASH, JAMB, RIGHT HAN UOC: LAD, LWD,	1
7	PAOZZ	0SHR6	31P00025	. .GASKET UOC: LAD, LWD,	4
8	PAOZZ	0SHR6	60S01908	. .GLASS UOC: LAD, LWD,	1
9	PAOZZ	0SHR6	108P00002	. .SASH, JAMB BOTTOM UOC: LAD, LWD,	1
10	PAOZZ	96906	MS24630-36	. .SCREW, TAPPING #8 X .50 UOC: LAD, LWD,	8
11	PAOZZ	0SHR6	139P00004	. .SASH, JAMB, LEFT HAND UOC: LAD, LWD,	1
12	PAOOO	0SHR6	135S00005	.ASSEMBLY, MAIN FRAME UOC: LAD, LWD,	1
13	PAOZZ	0SHR6	31P00024	. .MILL GASKET UOC: LAD, LWD,	2
14	PAOZZ	0SHR6	135P00002	. .FRAME, TOP UOC: LAD, LWD,	1
15	PAOZZ	0SHR6	136P00005	. .FRAME, JAMB, RIGHT HAND UOC: LAD, LWD,	1
16	PAOZZ	0SHR6	157P00013	. .SEAL, WEATHER UOC: LAD, LWD,	2
17	PAOZZ	0SHR6	31P00026	. .MILL GASKET-3 UOC: LAD, LWD,	2
18	PAOZZ	0SHR6	136P00004	. .FRAME, JAMB, LEFT HAND UOC: LAD, LWD,	1
19	PAOOO	0SHR6	137S00003	. .FRAME, BOTTOM, ASSEMB UOC: LAD, LWD,	1
20	PAOZZ	0SHR6	137P00002	. . .FRAME, BOTTOM UOC: LAD, LWD,	1
21	PAOZZ	0SHR6	155P00003	. . .SEAL, HORIZONTAL UOC: LAD, LWD,	1

(1) ITEM NO	(2) SMR CODE	(3) FSCM	(4) PART NUMBER	(5) DESCRIPTION AND USABLE ON CODE (UOC)	(6) QTY
22	PAOZZ	0SHR6	245W10063	. . .SCREW, FHP #10/24 X .63 FHP UOC: LAD, LWD,	1
23	PAOZZ	0SHR6	13S00012	. . .LATCH AND PROP UOC: LAD, LWD,	1
24	PAOZZ	0SHR6	331W08000	. . .WASHER, COUNTERSINK #8 UOC: LAD, LWD,	2
25	PAOZZ	0SHR6	232W08050	. . .SCREW, DHP #8 X .50 PHP UOC: LAD, LWD,	2
26	PAOZZ	0SHR6	33P00010	. . .LATCH, PROP ROD UOC: LAD, LWD,	1
27	PAOZZ	0SHR6	33P00011	. . .KEEPER, PROP ROD UOC: LAD, LWD,	1
28	PAOZZ	0SHR6	232W08038	. . .SCREW, PHP #8 X .38 PHP UOC: LAD, LWD,	2
29	PAOZZ	0SHR6	270W10000	. . .NUT, LOCK 10/24 UOC: LAD, LWD,	1
30	PAOZZ	0SHR6	147P00039	. . .SEAL, WEATHER UOC: LAD, LWD,	1
31	PAOOO	0SHR6	61S00080	.BLACKOUT SHIELD UOC: LAD, LWD,	1
32	PAOOO	0SHR6	180S00007	. .ASSEMBLY, HEADER UOC: LAD, LWD,	1
33	PAOZZ	0SHR6	180P00002	. . .FRAME, HEADER UOC: LAD, LWD,	1
34	PAOZZ	0SHR6	33P00012	. . .KEEPER UOC: LAD, LWD,	1
35	PAOZZ	0SHR6	142P00160	. . .GASKET UOC: LAD, LWD,	1
36	PAOOO	0SHR6	180S00009	. .ASSEMBLY, JAMB RH UOC: LAD, LWD,	1
37	PAOZZ	0SHR6	180P00008	. . .FRAME, JAMB RH UOC: LAD, LWD,	1
38	PAOZZ	0SHR6	30P00082	. . .STOP AND SUBSEQUENT UOC: LAD, LWD,	1
39	PAOZZ	0SHR6	142P00618	. . .GASKET, RUBBER UOC: LAD, LWD,	1
40	PAOOO	0SHR6	61S00078	. .PANEL, BLACKOUT UOC: LAD, LWD,	1
41	PAOOO	0SHR6	180S00011	. .ASSEMBLY, JAMB LH UOC: LAD, LWD,	1
42	PAOZZ	0SHR6	180P00010	. . .FRAME, JAMB LH UOC: LAD, LWD,	1
43	PAOZZ	0SHR6	233W08075	. .SCREW, PHP #8 X .75 UOC: LAD, LWD,	4
44	PAOZZ	0SHR6	50P00006	.SCREEN UOC: LAD, LWD,	1

END OF FIGURE

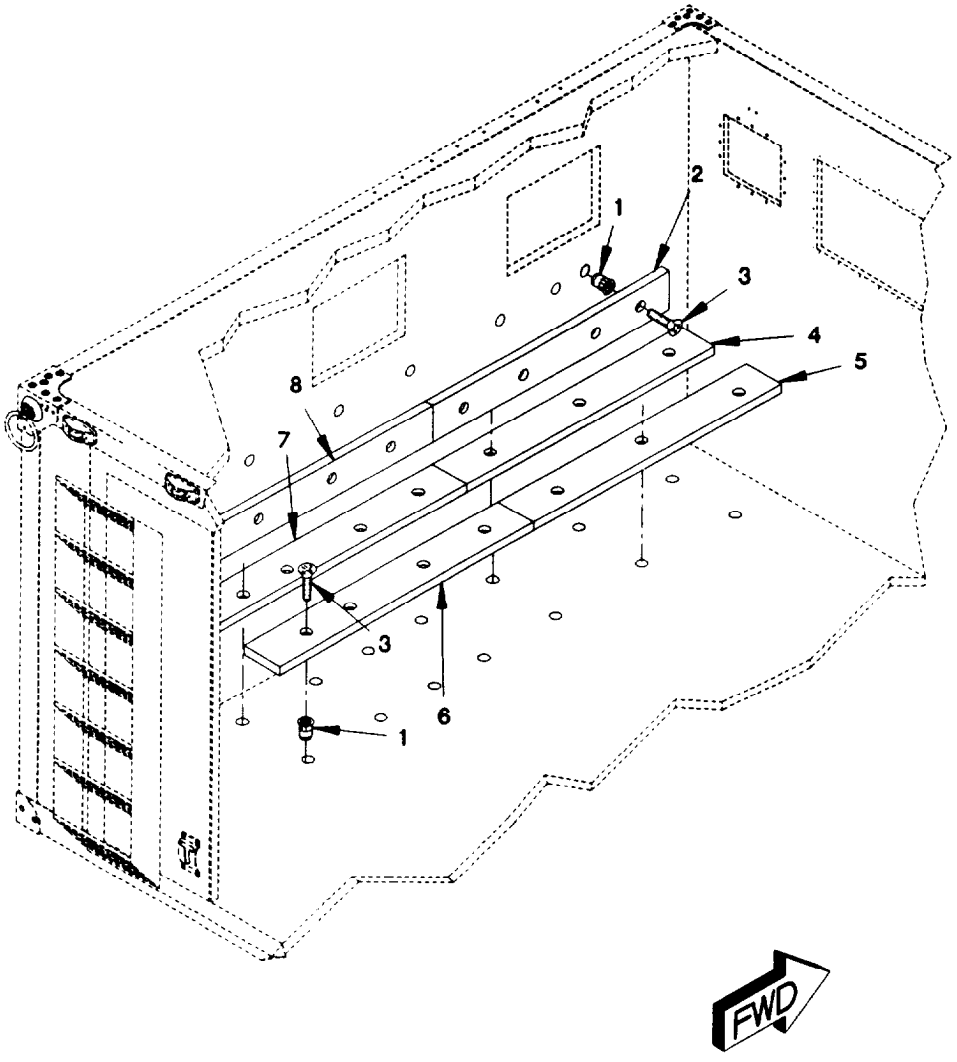

1812A-88

Figure 224. Van Tapping Plates (Sheet 1 of 2)

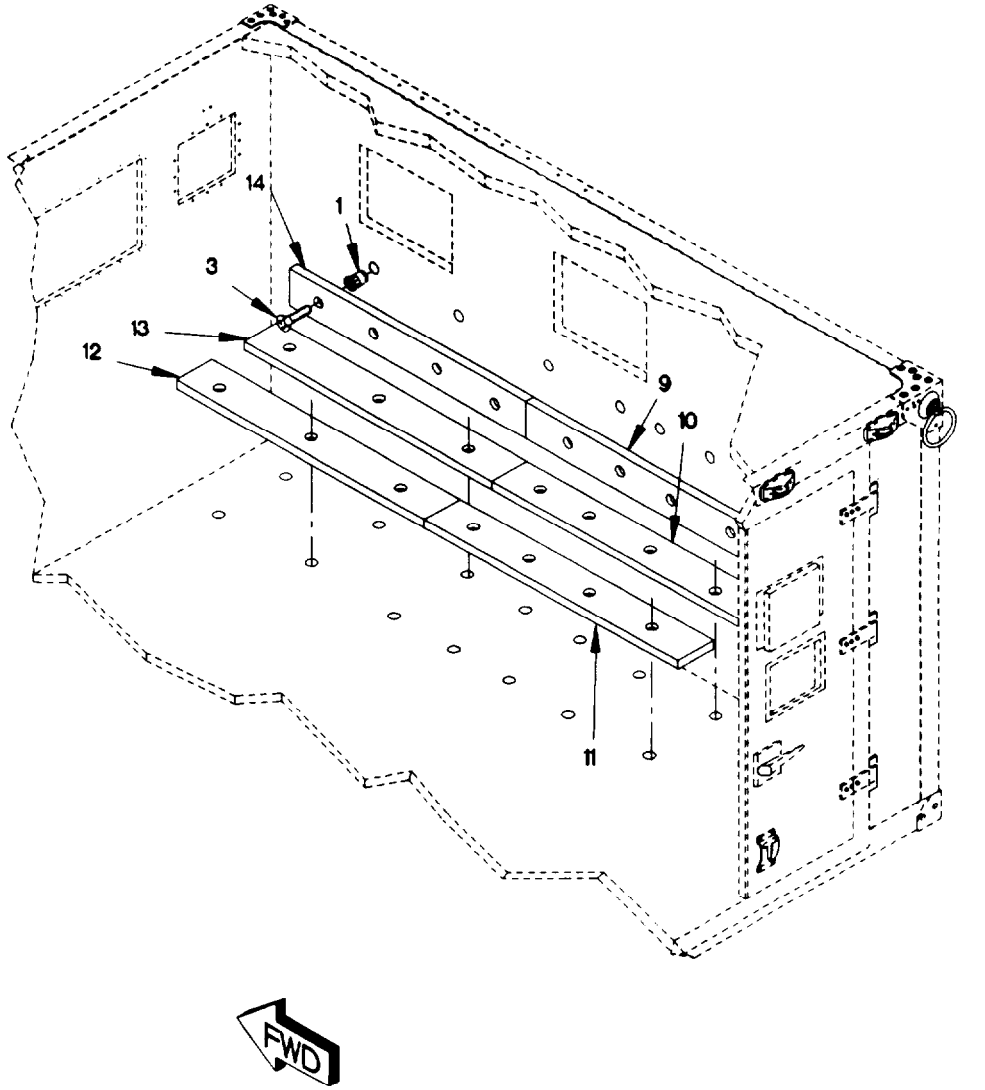

Figure 224. Van Tapping Plates (Sheet 2 of 2)

(1) ITEM NO	(2) SMR CODE	(3) FSCM	(4) PART NUMBER	(5) DESCRIPTION AND USABLE ON CODE (UOC)	(6) QTY
				GROUP 1812: SPECIAL PURPOSE BODIES FIG. 224 VAN TAPPING PLATES	
1	PAOZZ	96906	MS27130-S148	NUT, PLAIN, BLIND, RIV USED ON VAN BODY S/N 191 AND SUBSEQUENT UOC: LAD, LWD,	43
2	XODZZ	19207	12421509-008	PLATE, TAPPING USED ON VAN BODY S/N 191 AND SUBSEQUENT UOC: LAD, LWD,	1
3	PAOZZ	96906	MS24693-144	SCREW, MACHINE USED ON VAN BODY S/N 191 AND SUBSEQUENT UOC: LAD, LWD,	43
4	XDOZZ	19207	12421509-010	PLATE, TAPPING USED ON VAN BODY S/N 191 AND SUBSEQUENT UOC: LAD, LWD,	1
5	XDOZZ	19207	12421509-012	PLATE, TAPPING USED ON VAN BODY S/N 191 AND SUBSEQUENT UOC: LAD, LWD,	1
6	XDOZZ	19207	12421509-011	PLATE, TAPPING USED ON VAN BODY S/N 191 AND SUBSEQUENT UOC: LAD, LWD,	1
7	XDOZZ	19207	12421509-009	PLATE, TAPPING USED ON VAN BODY S/N 191 AND SUBSEQUENT UOC: LAD, LWD,	1
8	XDOZZ	19207	12421509-007	PLATE, TAPPING USED ON VAN BODY S/N 191 AND SUBSEQUENT UOC: LAD, LWD,	1
9	XDOZZ	19207	12421509-002	PLATE, TAPPING USED ON VAN BODY S/N 191 AND SUBSEQUENT UOC: LAD, LWD,	1
10	XDOZZ	19207	12421509-004	PLATE, TAPPING USED ON VAN BODY S/N 191 AND SUBSEQUENT UOC: LAD, LWD,	1
11	XDOZZ	19207	12421509-006	PLATE, TAPPING USED ON VAN BODY S/N 191 AND SUBSEQUENT UOC: LAD, LWD,	1
12	XDOZZ	19207	12421509-005	PLATE, TAPPING USED ON VAN BODY S/N 191 AND SUBSEQUENT UOC: LAD, LWD,	1
13	XDOZZ	19207	12421509-003	PLATE, TAPPING USED ON VAN BODY S/N 191 AND SUBSEQUENT UOC: LAD, LWD,	1
14	XDOZZ	19207	12421509-001	PLATE, TAPPING USED ON VAN BODY S/N 191 AND SUBSEQUENT UOC: LAD, LWD,	1
				END OF FIGURE	

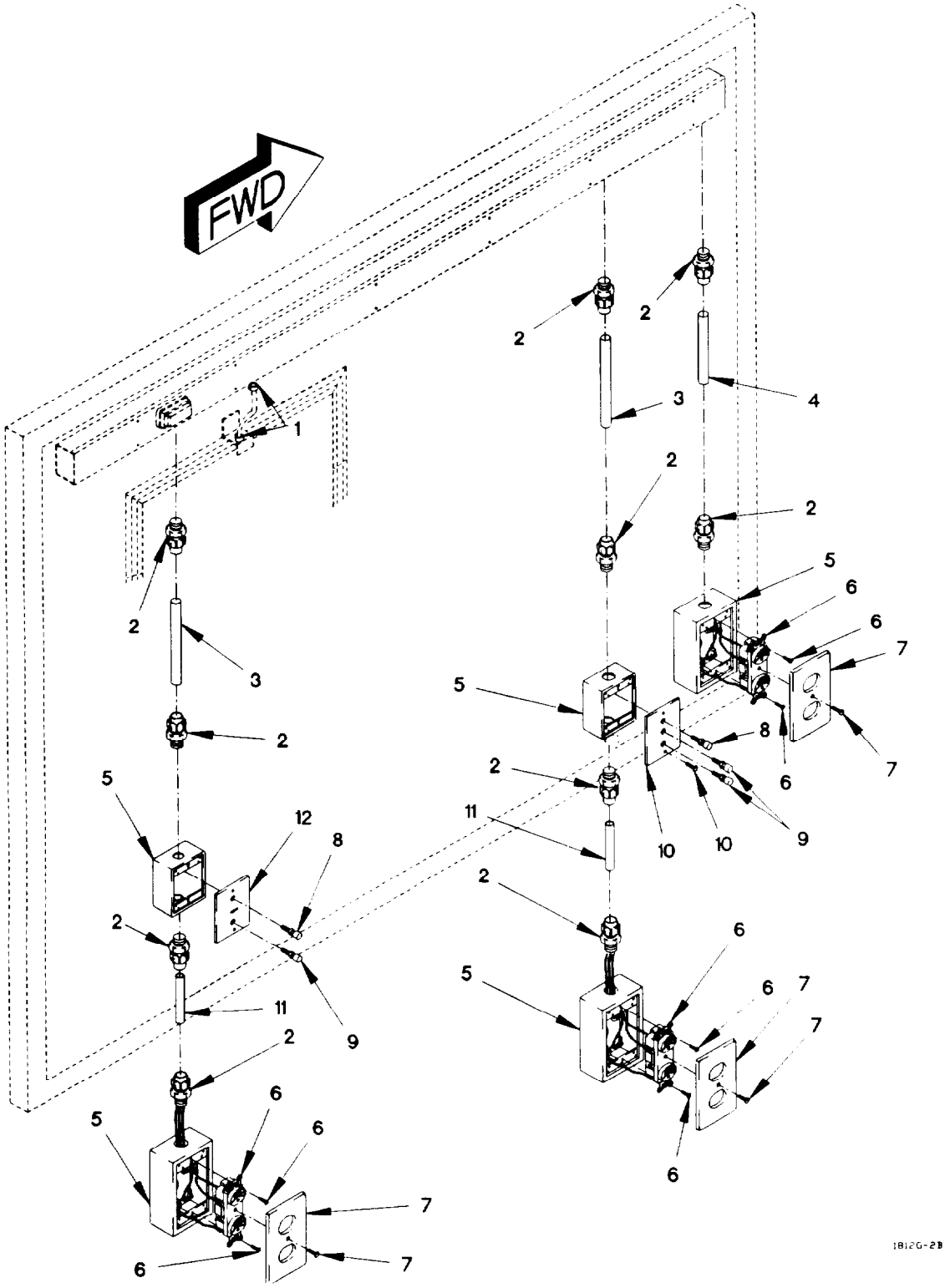

Figure 225. Van Electrical Boxes, Switches, and Fittings
(Sheet 1 of 5)

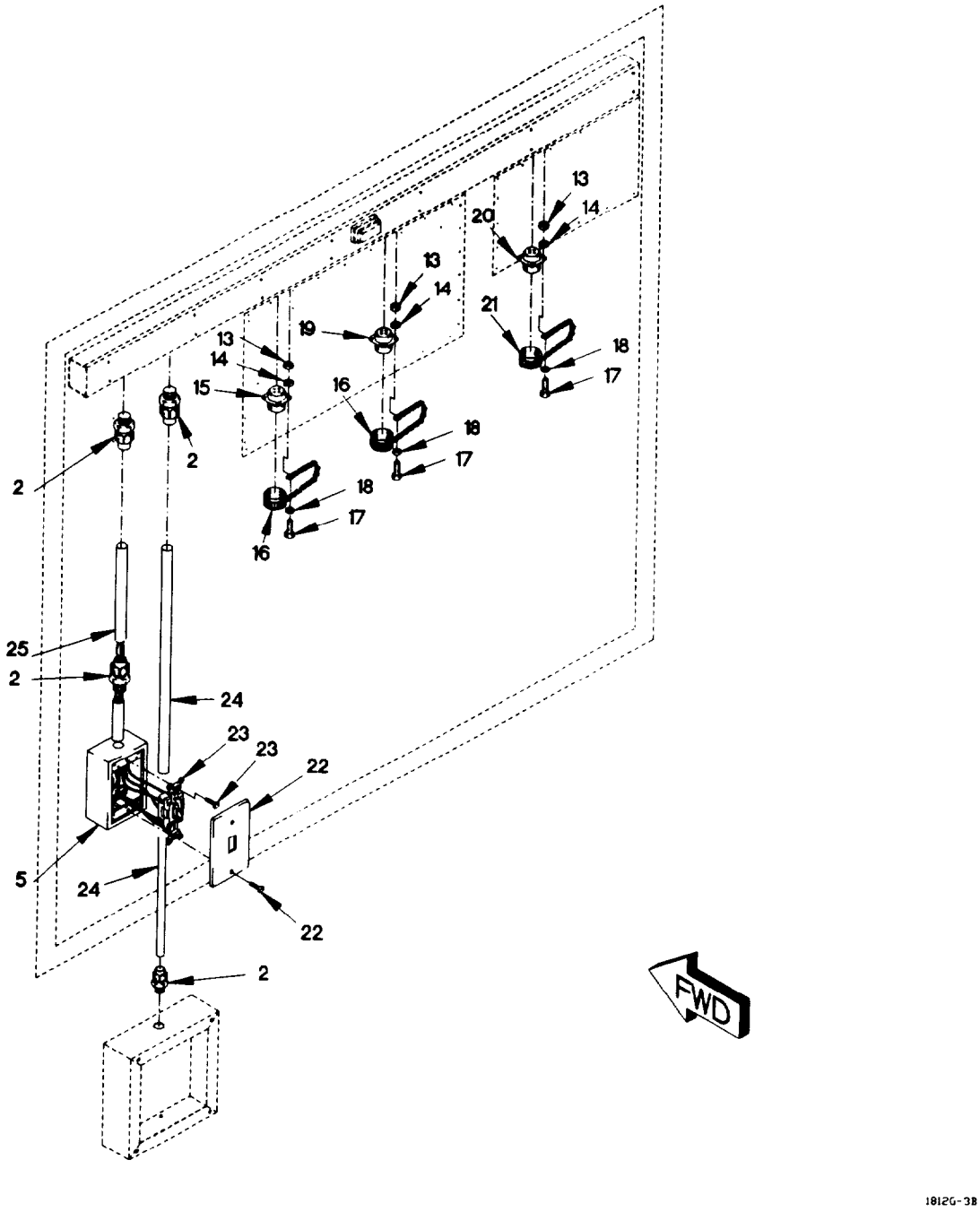

Fighure 225. Van Electrical Boxes, Switches, and Fittings
(Sheet 2 of 5)

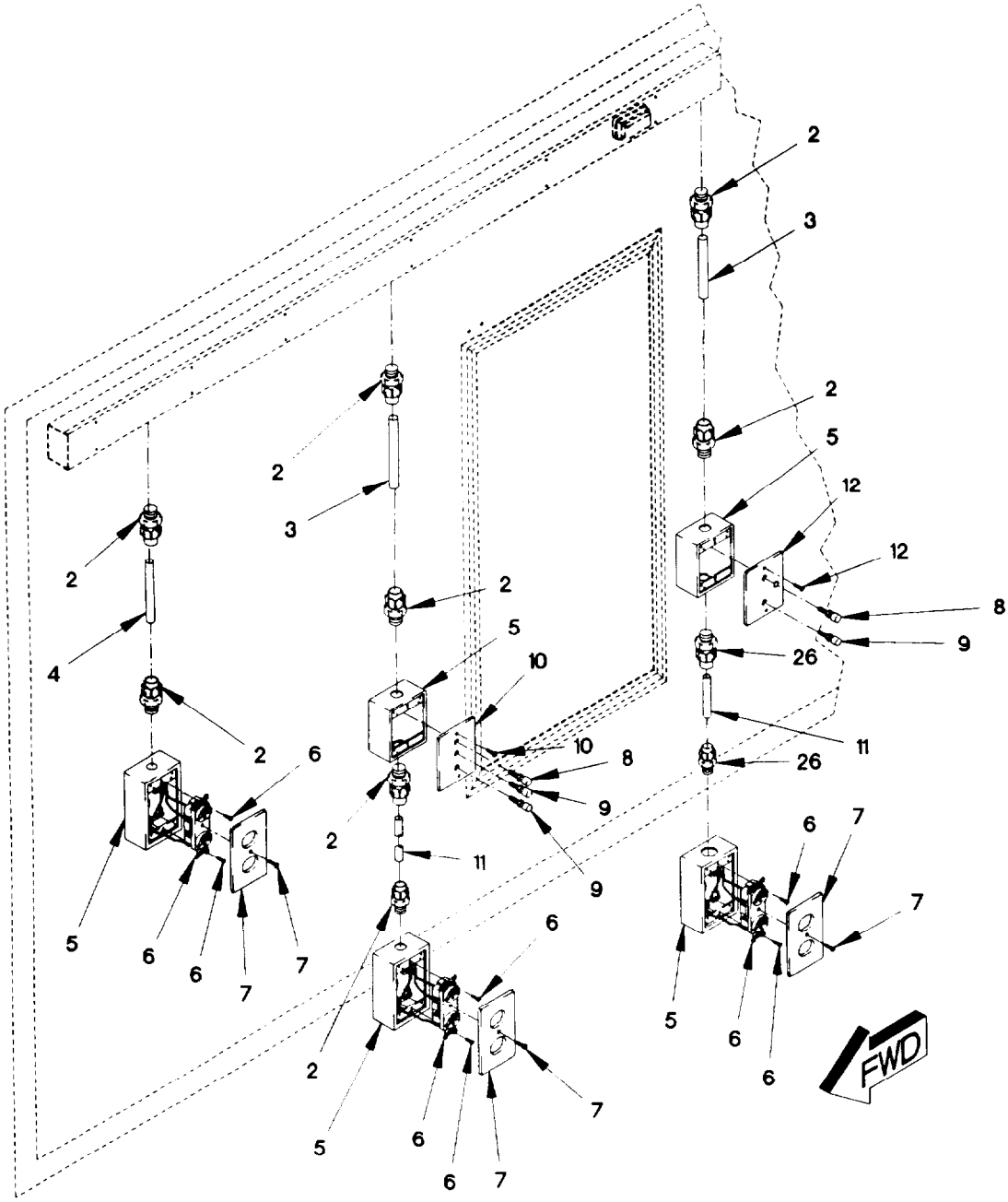

Figure 225. Van Elecrical Boxes, Switches, and Fittings
(Sheet 3 of 5)

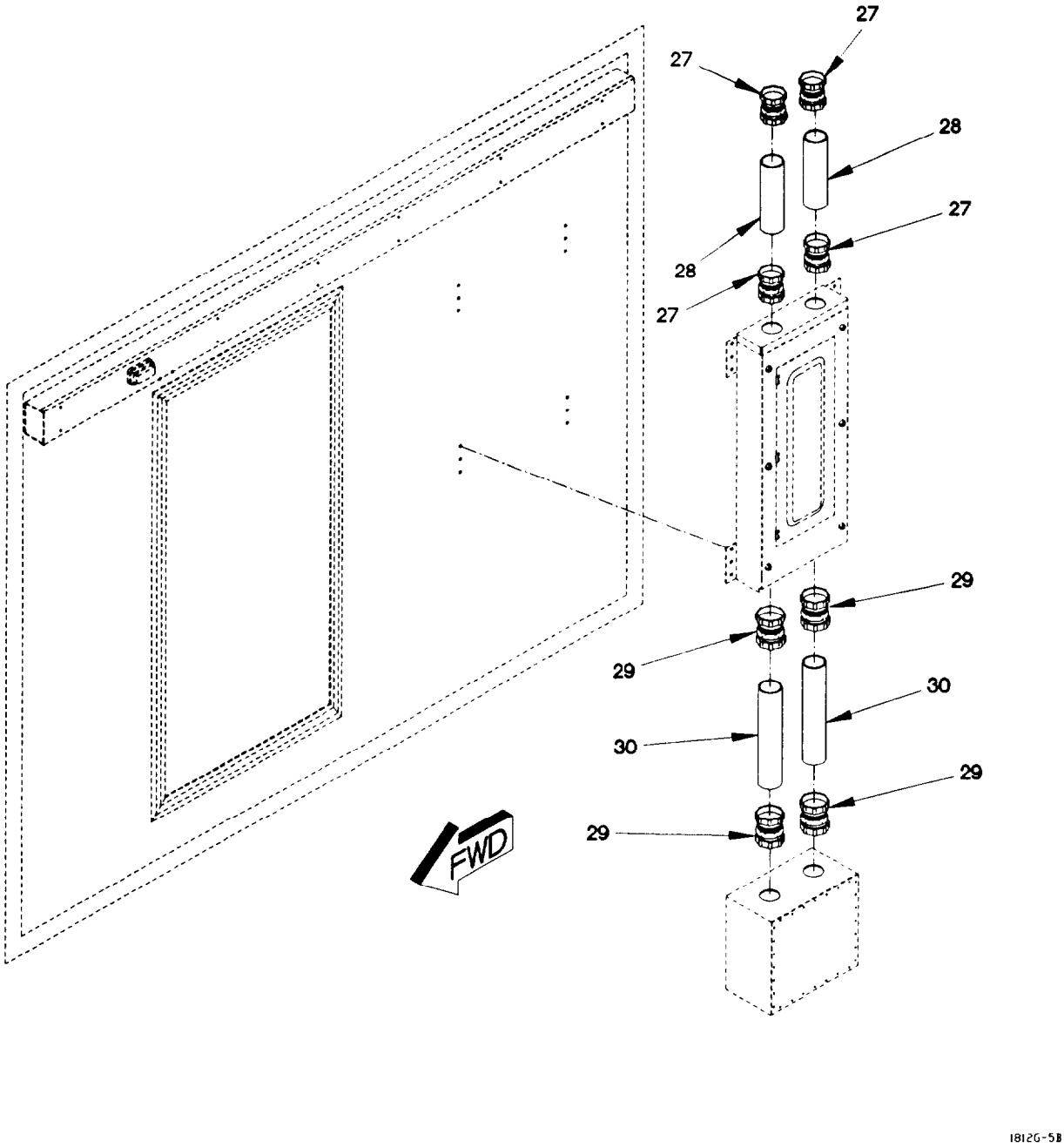

Figure 225. Van Electrical Boxes, Switches, and Fittings
(Sheet 4 of 5)

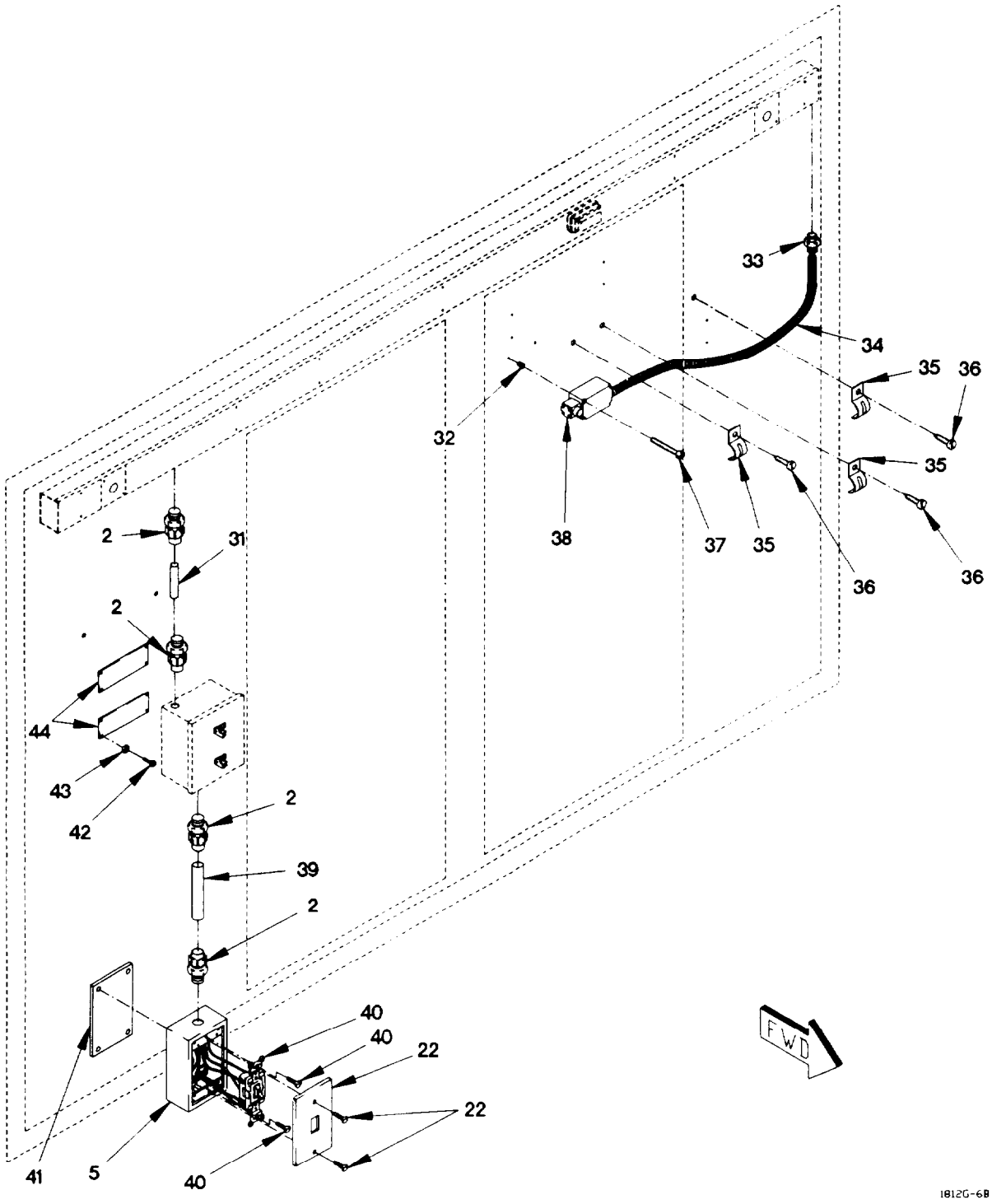

Figure 225. Van Electrical Boxes, Switches, and Fittings
(Sheet 5 of 5)

(1) ITEM NO	(2) SMR CODE	(3) FSCM	(4) PART NUMBER	(5) DESCRIPTION AND USABLE ON CODE (UOC)	(6) QTY
				GROUP 1812: SPECIAL PURPOSE BODIES FIG. 225 VAN ELECTRICAL BOXES, SWITCHES AND FITTINGS	
1	PAOZZ	18876	10280870	STRAIN RELIEF UOC: LAD, LWD,	10
2	PAOZZ	58536	AA50553-I-2-L-2-01-A	CONNECTOR, STRAIGHT .5 INCH UOC: LAD, LWD,	28
3	MOOZZ	19207	12421529-008	CONDUIT 1/2 INCH, MAKE FROM P/N: 51231, 15 IN. LG UOC: LAD, LWD,	4
4	MOOZZ	19207	12421529-010	CONDUIT 1/2 INCH, MAKE FROM P/N: 51231, 27.25IN. LG UOC: LAD, LWD,	2
5	XDOZZ	0FW39	12416413	BOX, OUTLET UOC: LAD, LWD,	12
6	PAOZZ	81337	5-4-4876	RECEPTACLE UOC: LAD, LWD,	6
7	PAOZZ	81337	5-4-4875	PLATE, WALL, ELECTRIC UOC: LAD, LWD,	6
8	PAOZZ	81349	PB08NA02	POST, BINDING, ELECTR UOC: LAD, LWD,	4
9	PAOZZ	81349	PB08NA01	POST, BINDING, ELECTR UOC: LAD, LWD,	6
10	PAOZZ	19207	12421497-002	COVER, RECEPTACLE 3 HOLE UOC: LAD, LWD,	2
11	MOOZZ	19207	12421529-009	CONDUIT 1/2 INCH, MAKE FROM P/N: 51231, 7.5IN. LG UOC: LAD, LWD,	4
12	PAOZZ	19207	12421497-001	COVER, RECEPTACLE 2 HOLE UOC: LAD, LWD,	2
13	PAOZZ	96906	MS35649-244	NUT, PLAIN, HEXAGON UOC: LAD, LWD,	12
14	PAOZZ	96906	MS35338-135	WASHER, LOCK UOC: LAD, LWD,	12
15	PAOZZ	96906	MS3102R18-11SC	CONNECTOR, ELECTRICA UOC: LAD, LWD,	1
16	PAOZZ	96906	MS25043-18DA	COVER, ELECTRICAL CO UOC: LAD, LWD,	2
17	PAOZZ	96906	MS51957-17	SCREW, MACHINE UOC: LAD, LWD,	12
18	PAOZZ	96906	MS15795-803	WASHER, FLAT UOC: LAD, LWD,	12
19	PAOZZ	96906	MS3102R18-10S	CONNECTOR, RECEPTACL UOC: LAD, LWD,	1
20	PAOZZ	96906	MS3452W14S-7P	CONNECTOR, RECEPTACL UOC: LAD, LWD,	1

(1) ITEM NO	(2) SMR CODE	(3) FSCM	(4) PART NUMBER	(5) DESCRIPTION AND USABLE ON CODE (UOC)	(6) QTY
21	PAOZZ	96906	MS25043-14DA	COVER, ELECTRICAL CONNECTOR UOC: LAD, LWD,	1
22	PAOZZ	81345	UL514A2.25X4.25	COVER, SWITCH UOC: LAD, LWD,	2
23	PAOZZ	81348	WS896/2-03A-G	SWITCH, TOGGLE	1
24	MOOZZ	19207	12421529-012	CONDUIT 1/2 INCH, MAKE FROM P/N/: 51231, 57 IN. LG. UOC: LAD, LWD,	1
25	MOOZZ	19207	12421529-011	CONDUIT 1/2 INCH, MAKE FROM P/N: 51231, 13 IN. LG. UOC: LAD, LWD,	1
26	PAOZZ	56501	H0221	NIPPLE, ELECTRICAL C UOC: LAD, LWD,	2
27	PAOZZ	58536	AA50553-I-2-L-2-03-A	CONNECTOR, STRAIGHT UOC: LAD, LWD,	2
28	MOOZZ	19207	12421529-003	CONDUIT 1.0 INCH, MAKE FROM P/N: THINWALL1INCH, 3 IN. LG UOC: LAD, LWD,	2
29	PAOZZ	58536	AA50553-I-2-L-2-06-A	CONNECTOR, STRAIGHT 2 INCH UOC: LAD, LWD,	4
30	MOOZZ	19207	12421529-006	CONDUIT 2 INCH, MAKE FROM P/N: WWC563, 12.5IN. LG UOC: LAD, LWD,	2
31	MOOZZ	19207	12421529-002	CONDUIT 1.00, MAKE FROM P/N: THINWALL1INCH, 2.75 INLG UOC: LAD, LWD,	1
32	PAOZZ	80205	NAS1329S3B130	NUT, PLAIN, BLIND, RIV UOC: LAD, LWD,	4
33	PAOZZ	19207	12421664-001	CONDUIT CONNECTOR, STRAIGHT UOC: LAD, LWD,	2
34	MOOZZ	19207	12421663-002X	CONDUIT, METAL, CUT TO LENGTH UOC: LAD, LWD,	1
35	PAOZZ	56501	65	STRAP, RETAINING UOC: LAD, LWD,	3
36	PAOZZ	96906	MS24625-47	SCREW, TAPPING UOC: LAD, LWD,	3
37	PAOZZ	96906	MS51958-70	SCREW, MACHINE UOC: LAD, LWD,	4
38	PAOZZ	91929	1LS10	SWITCH, SENSITIVE UOC: LAD, LWD,	1
39	MOOZZ	19207	12421529-007	CONDUIT 1/2 INCH, MAKE FROM P/N: 51231, 5.5IN. LG UOC: LAD, LWD,	1
40	PAOZZ	81348	WS896/2-06A-G	SWITCH, TOGGLE UOC: LAD, LWD,	1
41	XDOZZ	19207	12421589	SPACER, BOX 4.5 X 2.75 X .25 IN UOC: LAD, LWD,	1

(1) ITEM NO	(2) SMR CODE	(3) FSCM	(4) PART NUMBER	(5) DESCRIPTION AND USABLE ON CODE (UOC)	(6) QTY
42	PAOZZ	96906	MS51957-81	SCREW, MACHINE 1/4-20 X 3/4 UOC: LAD, LWD,	8
43	PAOZZ	96906	MS27183-10	WASHER, FLAT 9/32 UOC: LAD, LWD,	8
44	XDOZZ	19207	12421508	PLATE, DOUBLER DC RELAY BOX UOC: LAD, LWD,	2

END OF FIGURE

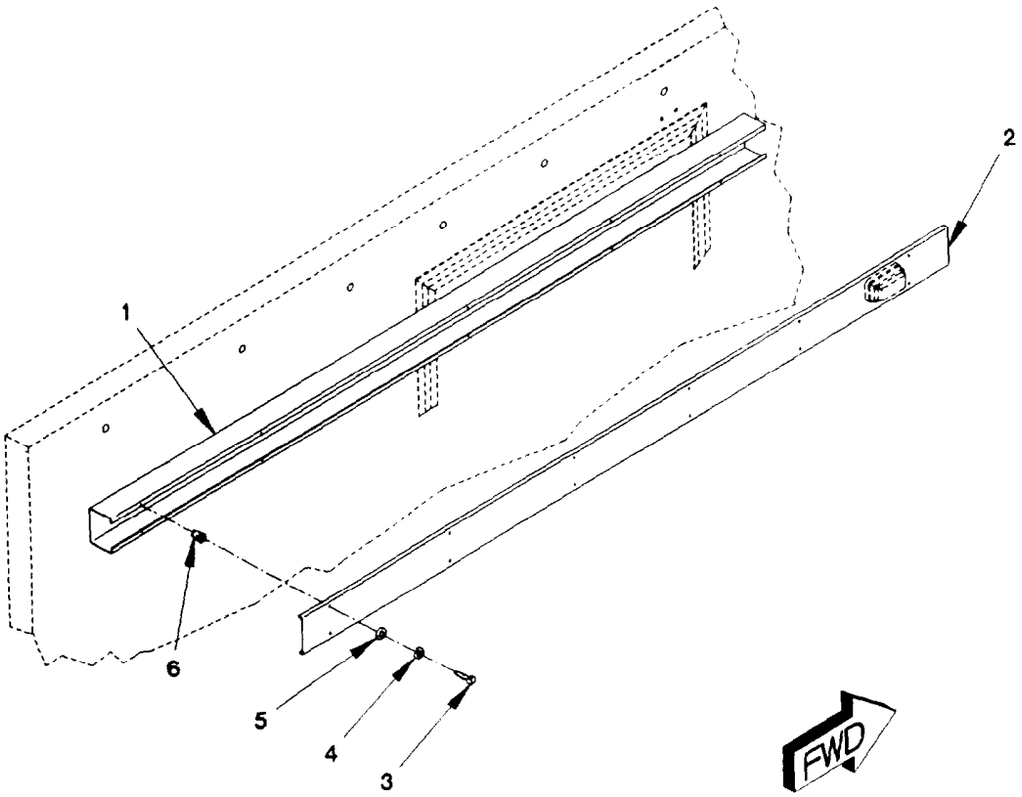

1812G-1B

Figure 226. Van Electrical Conduits (Sheet 1 of 6)

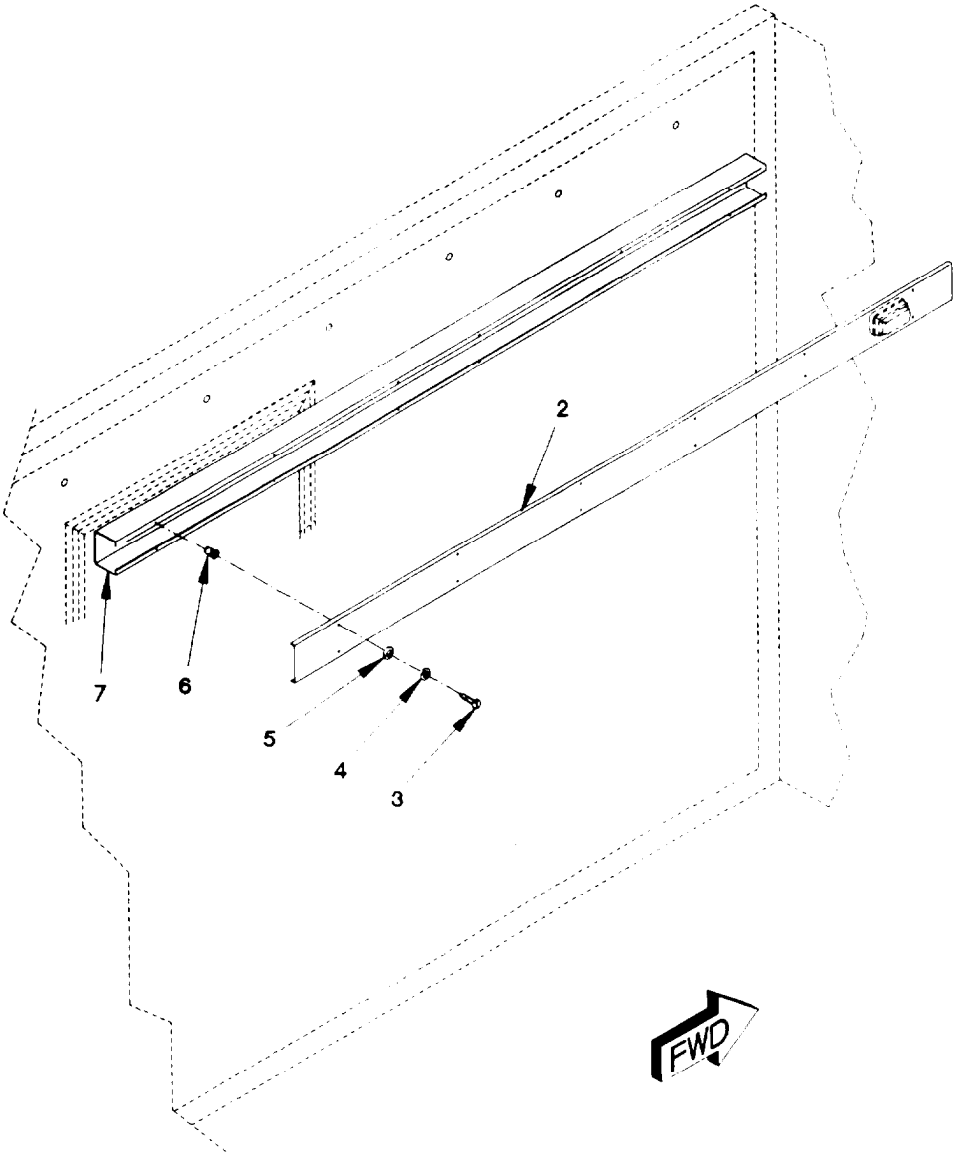

Figure 226. Van Electrical Conduits (Sheet 2 of 6)

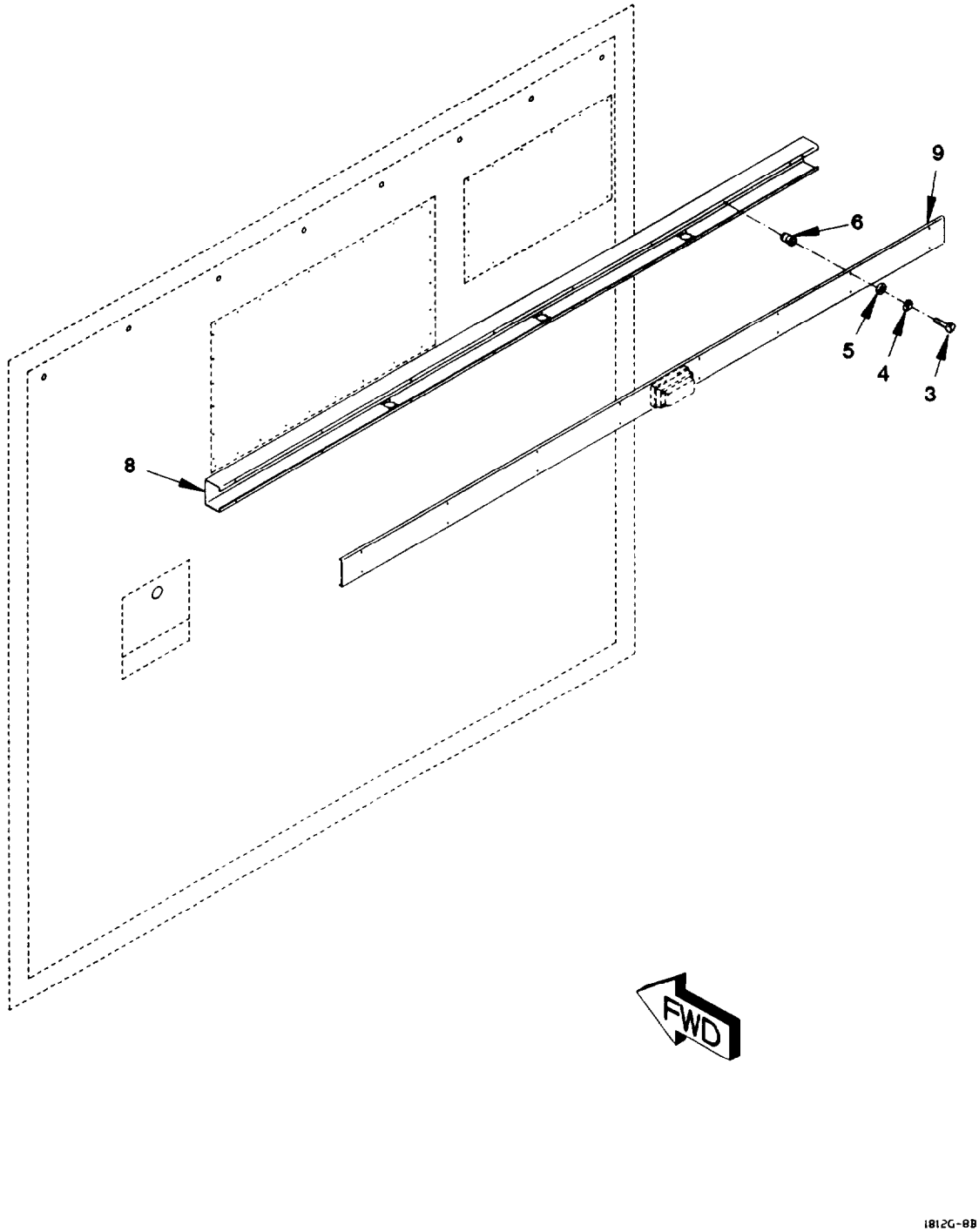

Figure 226. Van Electrical Conduits (Sheet 3 of 6)

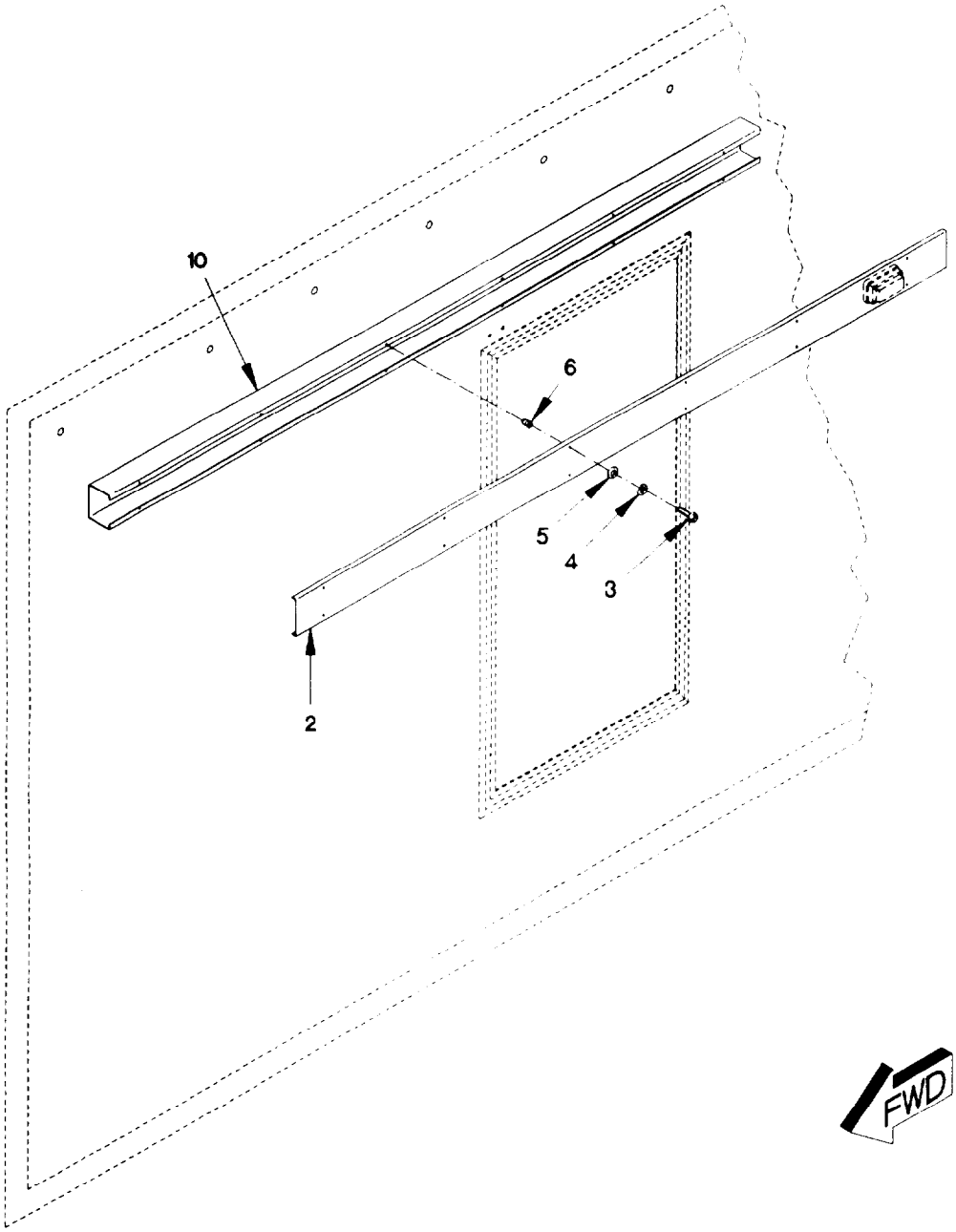

Figure 226. Van Electrical Conduits (Sheet 4 of 6)

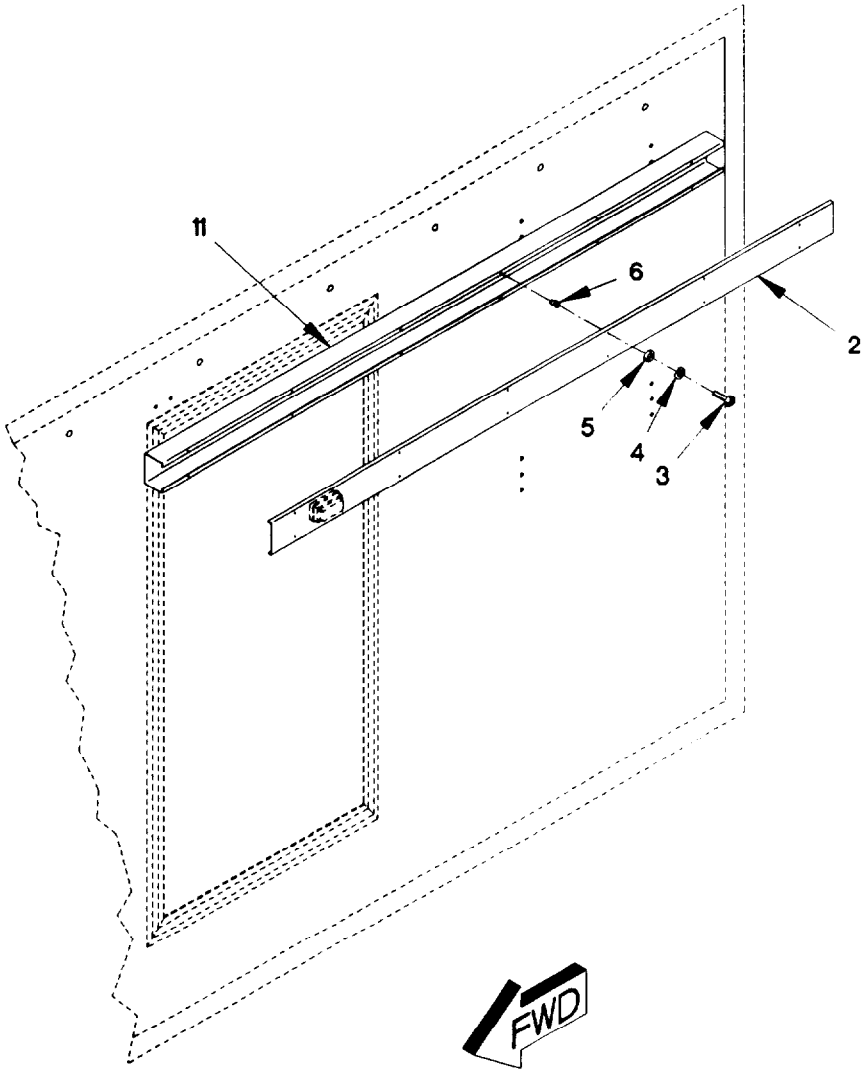

1812G10B

Figure 226. Van Electrical Conduits (Sheet 5 of 6)

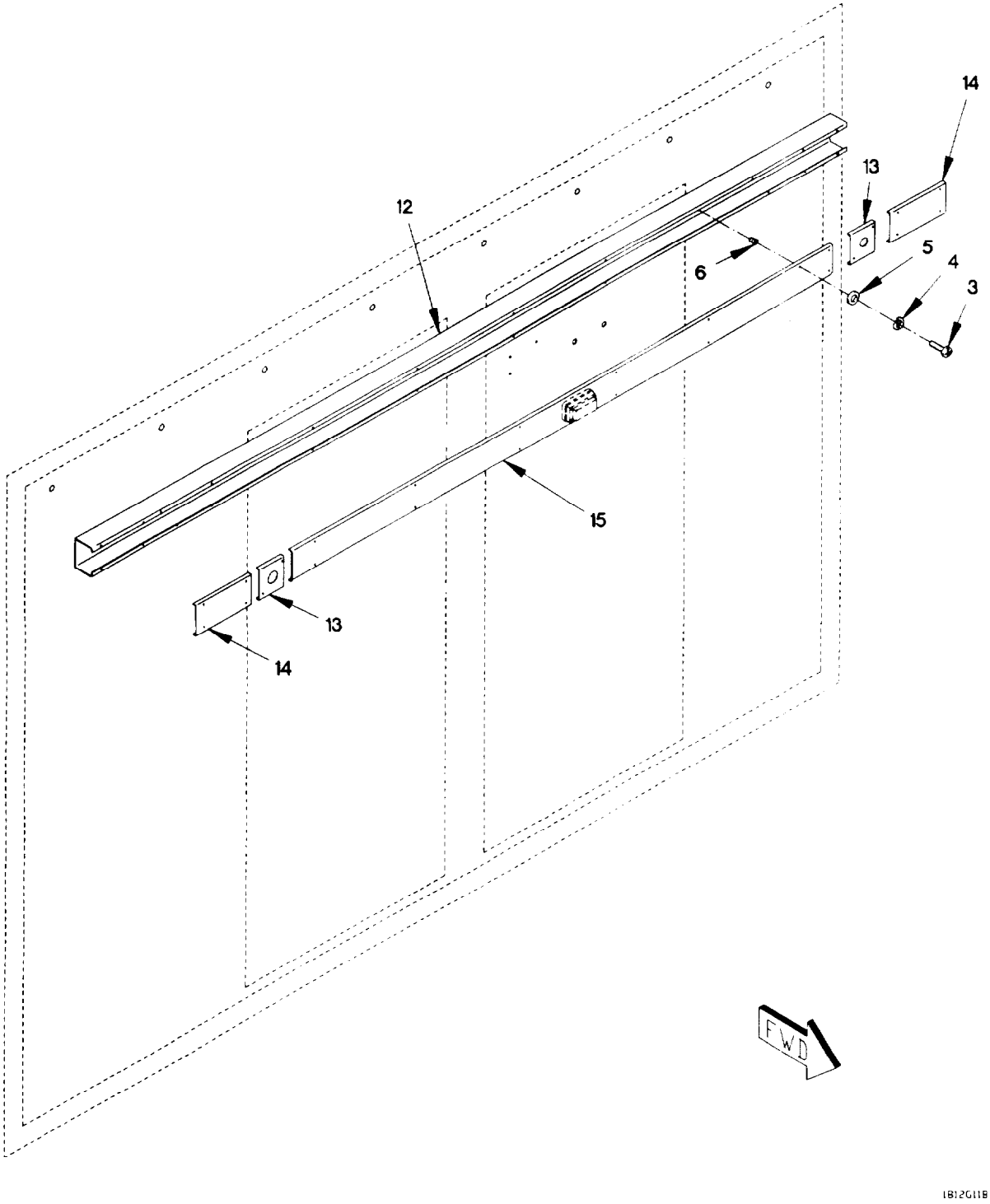

Figure 226. Van Electrical Conduits (Sheet 6 of 6)

(1) ITEM NO	(2) SMR CODE	(3) FSCM	(4) PART NUMBER	(5) DESCRIPTION AND USABLE ON CODE (UOC)	(6) QTY
				GROUP 1812: SPECIAL PURPOSE BODIES	
				FIG. 226 VAN ELECTRICAL CONDUITS	
1	XDOZZ	0FW39	12421506-006	RACEWAY	1
				UOC: LAD, LWD,	
2	PAOZZ	19207	12421507-005	COVER, RACEWAY LENGTH 69.8IN	4
				UOC: LAD, LWD,	
3	PAOZZ	96906	MS51957-45	SCREW, MACHINE #8-32 X 1/2	68
				UOC: LAD, LWD,	
4	PAOZZ	96906	MS35338-137	WASHER, LOCK NO. 8	84
				UOC: LAD, LWD,	
5	PAOZZ	96906	MS15795-807	WASHER, FLAT	88
				UOC: LAD, LWD,	
6	PAOZZ	78276	AKS7-832-80	.INSERT, SCREW THREAD	12
				UOC: LAD, LWD,	
7	XDOZZ	0FW39	12421506-005	RACEWAY	1
				UOC: LAD, LWD,	
8	PAOZZ	0FW39	12421506-001	RACEWAY	1
				UOC: LAD, LWD,	
9	PAOZZ	19207	12421507-001	RACEWAY, COVER LENGTH 85.5 IN	1
				UOC: LAD, LWD,	
10	XDOZZ	0FW39	12421506-003	RACEWAY	1
				UOC: LAD, LWD,	
11	XDOZZ	0FW39	12421506-004	RACEWAY	1
				UOC: LAD, LWD,	
12	XDOZZ	0FW39	12421506-002	RACEWAY	1
				UOC: LAD, LWD,	
13	PAOZZ	19207	12421507-004	COVER, RACEWAY LENGTH 4IN	2
				UOC: LAD, LWD,	
14	PAOZZ	19207	12421507-003	COVER, RACEWAY LENGTH 7.75IN	2
				UOC: LAD, LWD,	
15	PAOZZ	19207	12421507-002	COVER, RACEWAY LENGTH 62.0IN	1
				UOC: LAD, LWD,	
				END OF FIGURE	

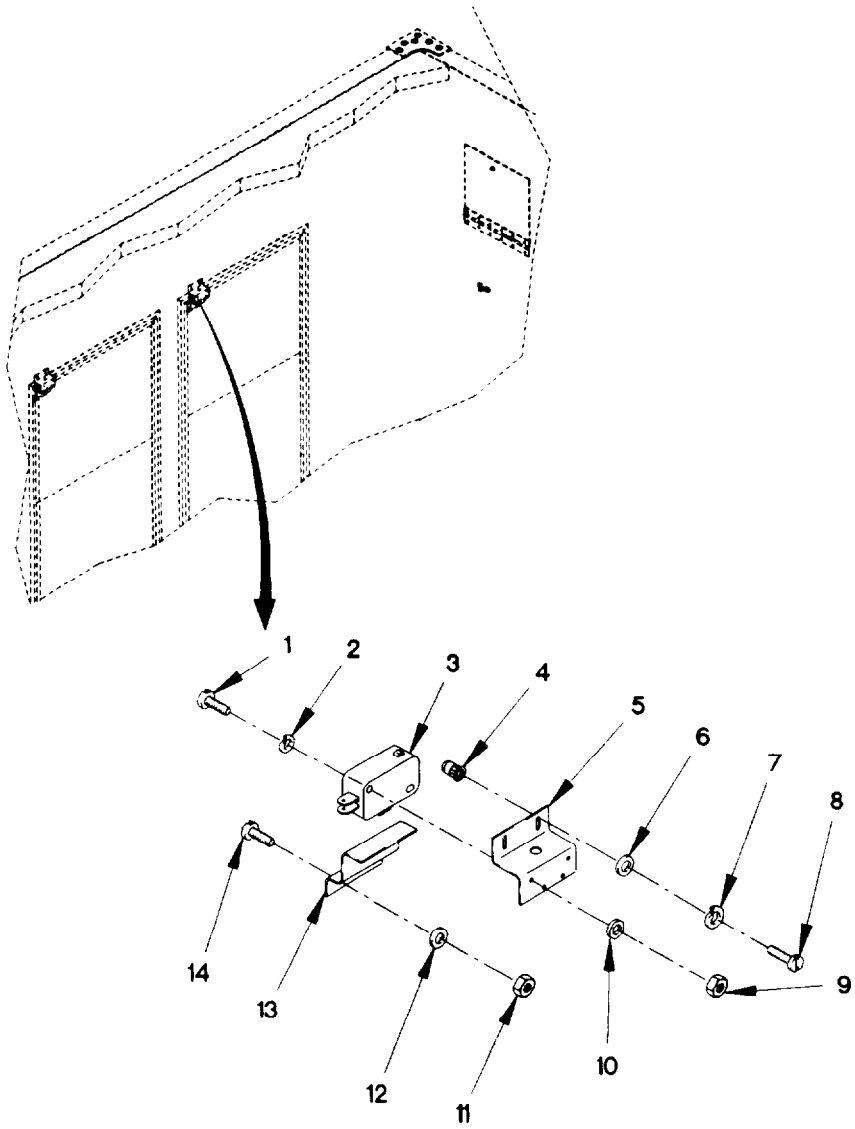

18120-18

Figure 227. Van Blackout Switches

(1) ITEM NO	(2) SMR CODE	(3) FSCM	(4) PART NUMBER	(5) DESCRIPTION AND USABLE ON CODE (UOC)	(6) QTY
				GROUP 1812: SPECIAL PURPOSE BODIES	
				FIG. 227 VAN BLACKOUT SWITCHES	
1	PAOZZ	96906	MS51957-17	SCREW, MACHINE #4-40 X 1/2	10
				UOC: LAD, LWD,	
2	PAOZZ	96906	MS35338-135	WASHER, LOCK	10
				UOC: LAD, LWD,	
3	PAOZZ	91929	V31D8	SWITCH, SENSITIVE	5
				UOC: LAD, LWD,	
4	PAOZZ	98749	9375410-7	INSERT, SCREW THREAD	10
				UOC: LAD, LWD,	
5	XDOZZ	19207	12421682	BRACKET	5
				UOC: LAD, LWD,	
6	PAOZZ	96906	MS15795-808	WASHER, FLAT	10
				UOC: LAD, LWD,	
7	PAOZZ	96906	MS35338-138	WASHER, LOCK #10	10
				UOC: LAD, LWD,	
8	PAOZZ	96906	MS51958-65	SCREW, MACHINE #10-32 X 3/4	10
				UOC: LAD, LWD,	
9	PAOZZ	96906	MS35650-344	NUT, PLAIN, HEXAGON	10
				UOC: LAD, LWD,	
10	PAOZZ	96906	MS15795-803	WSHER, FLAT	10
				UOC: LAD, LWD,	
11	PAOZZ	96906	MS21044C08	NUT, SELF-LOCKING, HE	10
				UOC: LAD, LWD,	
12	PAOZZ	96906	MS15795-807	WASHER, FLAT	10
				UOC: LAD, LWD,	
13	XDOZZ	19207	12421681	BRACKET	5
				UOC: LAD, LWD,	
14	PAOZZ	96906	MS51957-45	SCREW, MACHINE	10
				UOC: LAD, LWD,	
				END OF FIGURE	

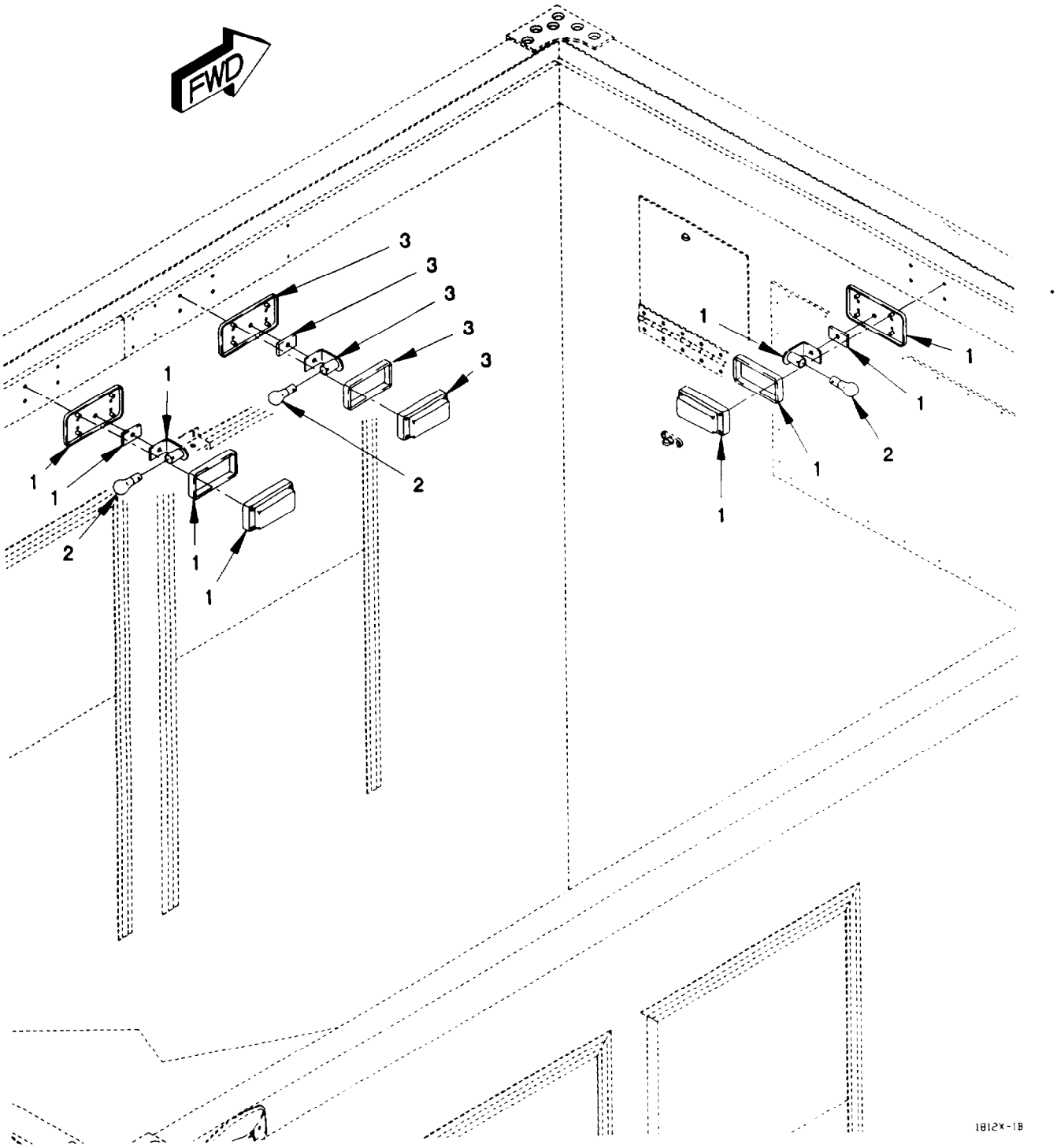

Figure 228. Van Blackout And Emergency Lights

(1) ITEM NO	(2) SMR CODE	(3) FSCM	(4) PART NUMBER	(5) DESCRIPTION AND USABLE ON CODE (UOC)	(6) QTY
				GROUP 1812: SPECIAL PURPOSE BODIES FIG. 228 VAN BLACKOUT AND EMERGENCY LIGHTS	
1	PAOZZ	19207	12421662-002	LIGHT, DOME WHITE UOC: LAD, LWD,	4
2	PAOZZ	58451	PL1309	LAMP, INCANDESCENT UOC: LAD, LWD,	6
3	PAOZZ	19207	12421662-001	LIGHT, DOME BLUE UOC: LAD, LWD,	2
				END OF FIGURE	

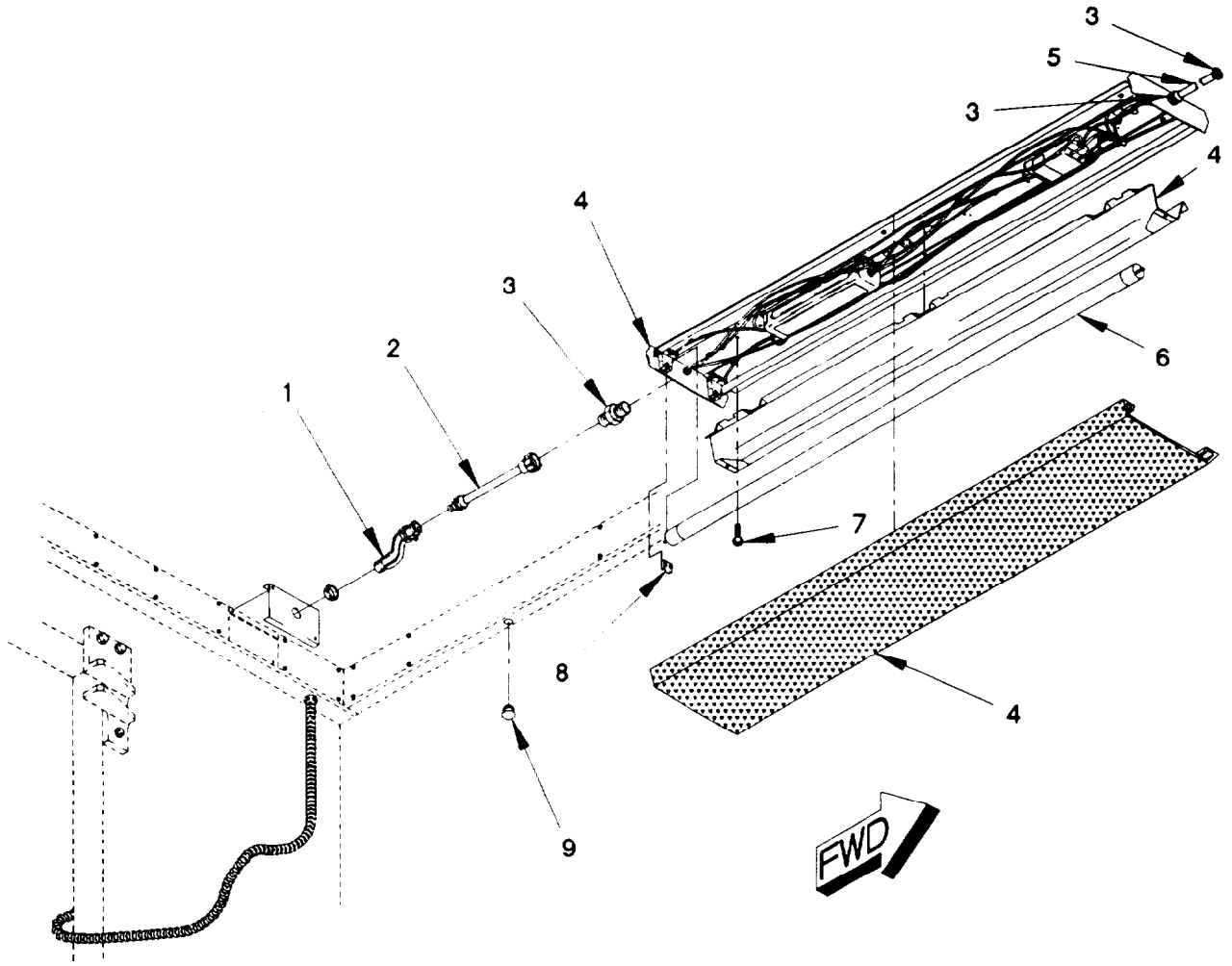

Figure 229. Van Lighting Fixture

(1) ITEM NO	(2) SMR CODE	(3) FSCM	(4) PART NUMBER	(5) DESCRIPTION AND USABLE ON CODE (UOC)	(6) QTY
				GROUP 1812: SPECIAL PURPOSE BODIES FIG. 229 VAN LIGHTING FIXTURE	
1	PAOZZ	56501	H0221	NIPPLE, ELECTRICAL C UOC: LAD, LWD,	2
2	MOOZZ	19207	12421529-004	CONDUIT 1/2 INCH, MAKE FROM P/N: 51231, 16 IN. LG UOC: LAD, LWD,	2
3	PAOZZ	58536	AA50553-I-2-L-2-03-A	CONNECTOR, STRAIGHT 1 INCH UOC: LAD, LWD,	6
4	PAOZZ	58536	A-A-1535 TY1	FIXTURE, LIGHTING UOC: LAD, LWD,	4
5	MOOZZ	19207	12421529-005	CONDUIT 1/2 INCH, MAKE FROM P/N: 51231, 6.13IN. LG UOC: LAD, LWD,	2
6	PAOZZ	08108	F40CW	LAMP, FLUORESCENT UOC: LAD, LWD,	8
7	PAOZZ	96906	MS24625-47	SCREW, TAPPING 10 X 1 IN UOC: LAD, LWD,	16
8	PAOZZ	19207	12421568	HOLDER, TUBE LOCK UOC: LAD, LWD,	16
9	PAOZZ	59730	5712	PLUG, HOLE UOC: LAD, LWD,	1
				END OF FIGURE	

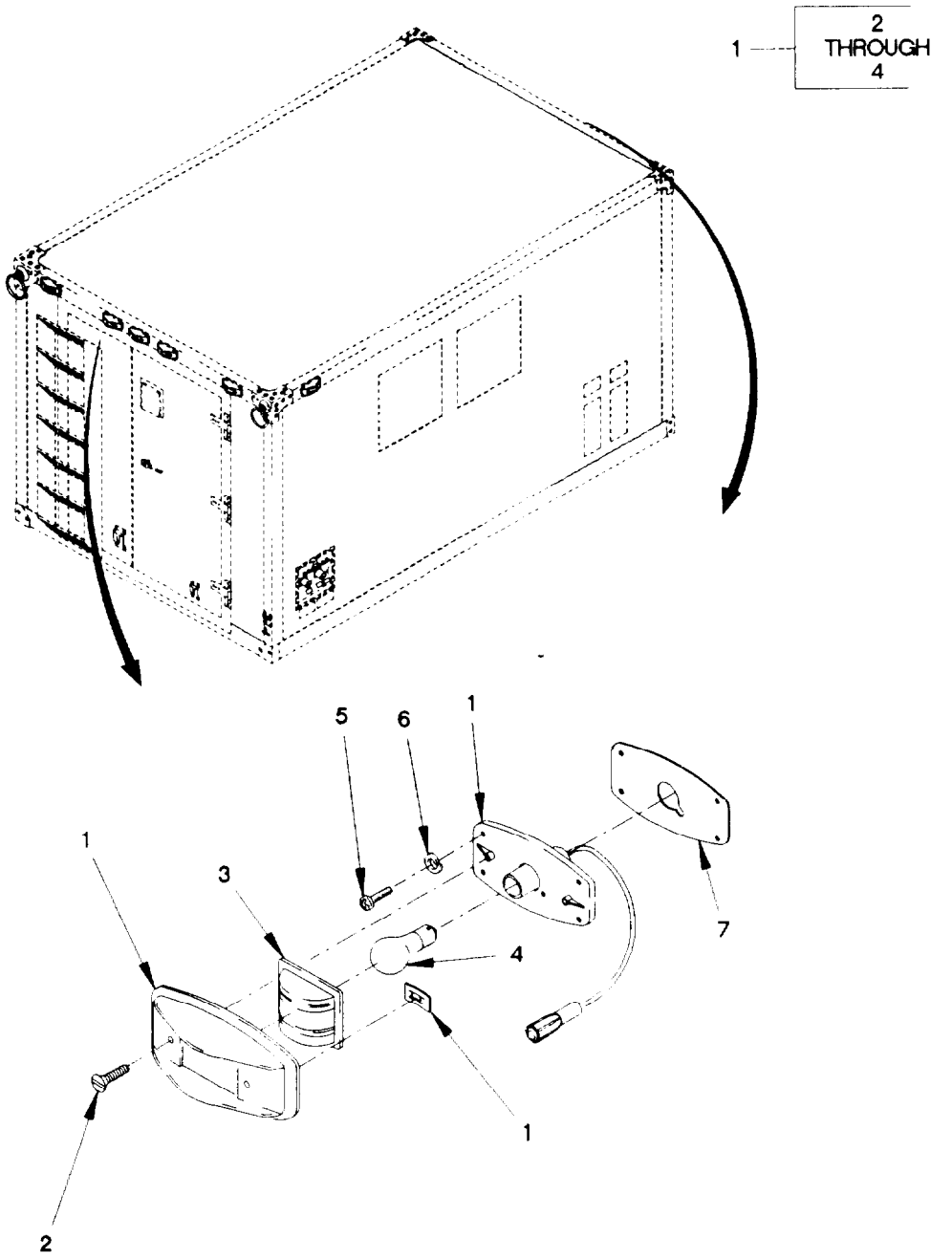

Figure 230. Van Clearance Lights

(1) ITEM NO	(2) SMR CODE	(3) FSCM	(4) PART NUMBER	(5) DESCRIPTION AND USABLE ON CODE (UOC)	(6) QTY
				GORUP 1812: SPECIAL PURPOSE BODIES	
				FIG. 230 VAN CLEARANCE LIGHTS	
1	PAOOO	96906	MS35423-3	LIGHT, MARKER, CLEARA AMBER	5
				UOC: LAD, LWD,	
1	PAOOO	96906	MS35423-4	LIGHT, MARKER, CLEARA ,RED	7
				UOC: LAD, LWD,	
2	PAOZZ	96906	MS35206-261	.SCREW, MACHINE #10-24 X .375	2
				UOC: LAD, LWD,	
3	PAOZZ	96906	MS35421-1	.LENS, LIGHT AMBER	1
				UOC: LAD, LWD,	
3	PAOZZ	96906	MS35421-2	.LENS, LIGHT ,RED	1
				UOC: LAD, LWD,	
4	PAOZZ	81348	W-L-00111/60	.LAMP, INCANDESCENT	1
				UOC: LAD, LWD,	
5	PAOZZ	96906	MS51958-65	SCREW, MACHINE #10-32 X 3/4	52
				UOC: LAD, LWD,	
6	PAOZZ	96906	MS35338-138	WASHER, LOCK #10	48
				UOC: LAD, LWD,	
7	PAOZZ	0FW39	12421469	GASKET, LIGHT, MARKER CLEARANCE	12
				UOC: LAD, LWD,	
				END OF FIGURE	

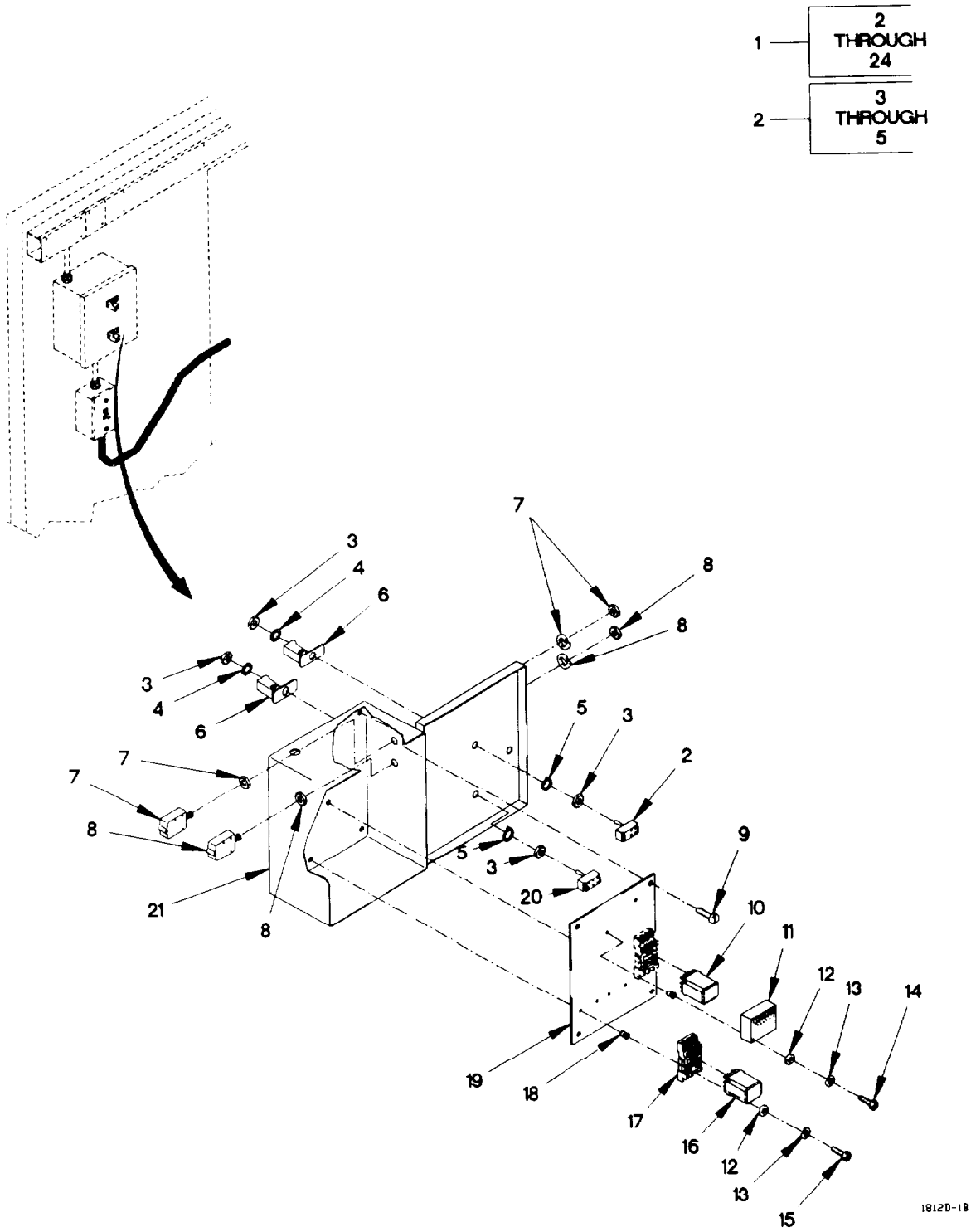

Figure 231. Van Relay Box Assembly

(1) ITEM NO	(2) SMR CODE	(3) FSCM	(4) PART NUMBER	(5) DESCRIPTION AND USABLE ON CODE (UOC)	(6) QTY
				GROUP 1812: SPECIAL PURPOSE BODIES	
				FIG. 231 VAN RELAY BOX ASSEMBLY	
1	PAOOO	19207	12421505	BOX, RELAY, ASSEMBLY	1
				UOC: LAD, LWD,	
2	PAOZZ	96906	MS24524-22	.SWITCH, TOGGLE	1
				UOC: LAD, LWD,	
3	PAOZZ	96906	MS25082-21	. .NUT, PLAIN, HEXAGON	2
				UOC: LAD, LWD,	
4	PAOZZ	96906	MS35338-98	. .WASHER, LOCK	1
				UOC: LAD, LWD,	
5	PAOZZ	96906	MS35333-121	. .WASHER, LOCK	1
				UOC: LAD, LWD,	
6	PAOZZ	96906	MS25223-2	.GUARD, SWITCH	2
				UOC: LAD, LWD,	
7	PAOZZ	77342	W23X1A1G-20	.CIRCUIT BREAKER	1
				UOC: LAD, LWD,	
8	PAOZZ	77342	W23X1A1G-5	.CIRCUIT BREAKER	1
				UOC: LAD, LWD,	
9	PAOZZ	96906	MS51958-62	.SCREW, MACHINE	4
				UOC: LAD, LWD,	
10	PAOZZ	19207	8501 KX13V53	.RELAY, PLUG IN, 24VDC	1
				UOC: LAD, LWD,	
11	PAOZZ	0AOE9	ECU-PMTA	.FLASHER, ECU	1
				UOC: LAD, LWD,	
12	PAOZZ	96906	MS15795-807	.WASHER, FLAT	8
				UOC: LAD, LWD,	
13	PAOZZ	96906	MS35338-137	.WASHER, LOCK NO. 8	8
				UOC: LAD, LWD,	
14	PAOZZ	96906	MS51957-51	.SCREW, MACHINE	2
				UOC: LAD, LWD,	
15	PAOZZ	96906	MS51957-48	.SCREW, MACHINE	6
				UOC: LAD, LWD,	
16	PAOZZ	08556	8501 KX13V20	.RELAY PLUG IN, 110V	2
				UOC: LAD, LWD,	
17	PAOZZ	56365	8501NR82	.SOCKET PLUG IN	3
				UOC: LAD, LWD,	
18	PAOZZ	84256	AKS7-832-130	.INSERT, SCREW THREAD	8
				UOC: LAD, LWD,	
19	PAOZZ	19207	12421565	.PLATE INNER	1
				UOC: LAD, LWD,	
20	PAOZZ	96906	MS24524-23	.SWITCH, TOGGLE	1
				UOC: LAD, LWD,	
21	PAOZZ	19207	12416414	.BOX, RELAY	1
				UOC: LAD, LWD,	
				END OF FIGURE	

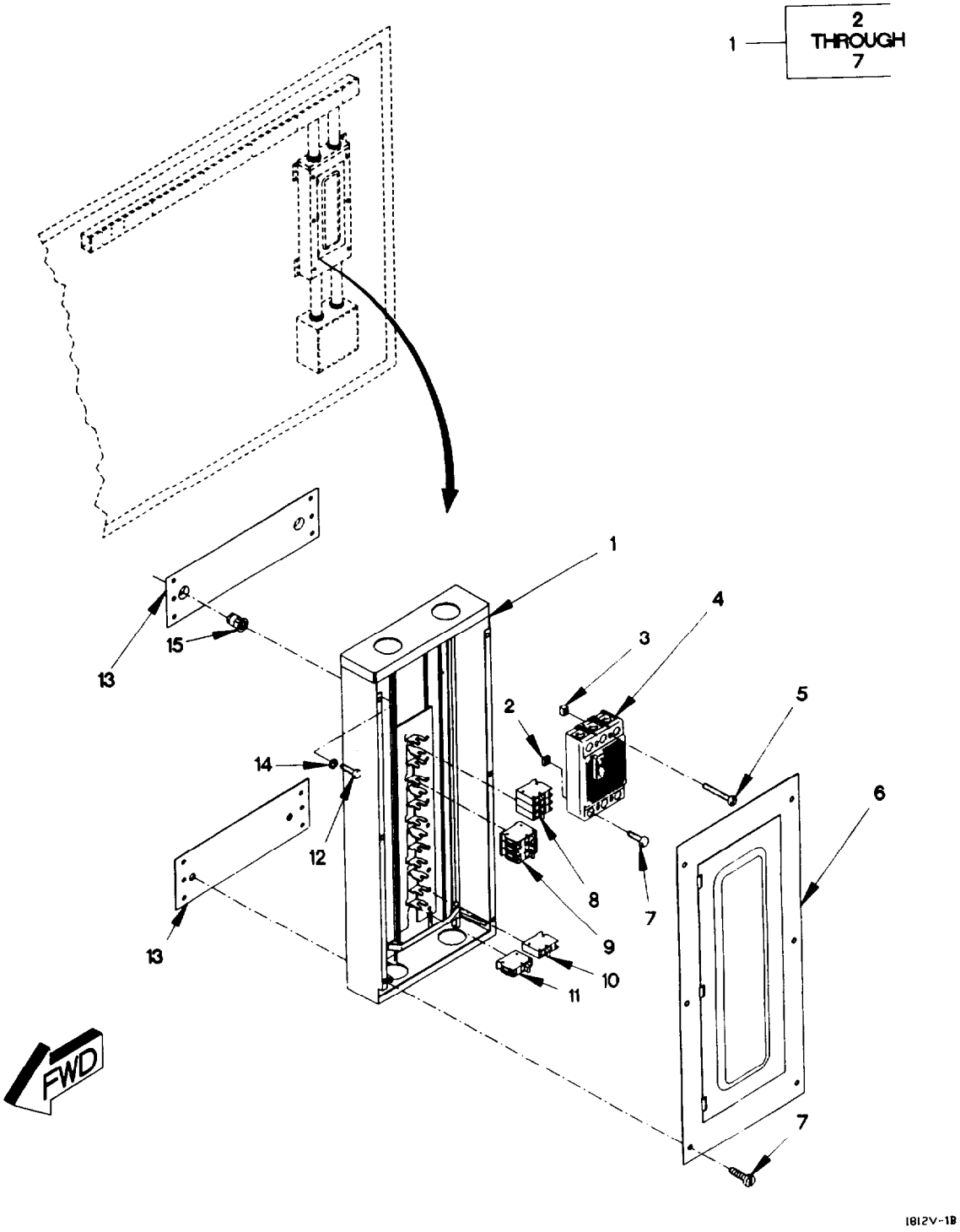

Figure 232. Van Breaker Box Assembly

(1) ITEM NO	(2) SMR CODE	(3) FSCM	(4) PART NUMBER	(5) DESCRIPTION AND USABLE ON CODE (UOC)	(6) QTY
				GROUP 1812: SPECIAL PURPOSE BODIES	
				FIG. 232 VAN BREAKER BOX ASSEMBLY	
1	PFOOO	66842	G3042MB3200CU	BOX, BREAKER, ASSEMBL	1
				UOC: LAD, LWD,	
2	PAOZZ	66842	6650007	.SPACER, BREAKER	3
				UOC: LAD, LWD,	
3	PAOZZ	66842	5820044	.SCREW, RETAINER	2
				UOC: LAD, LWD,	
4	PAOZZ	66842	QJ23B200X	.CIRCUIT BREAKER 200A	1
				UOC: LAD, LWD,	
5	PAOZZ	66842	9160078	.SCREW, BREAKER, MOUNT	2
				UOC: LAD, LWD,	
6	XDOZZ	66842	5400437	.TRIM	1
				UOC: LAD, LWD,	
7	PAOZZ	66842	9160085	.SCREW 1/4-20 X 7/8	3
				UOC: LAD, LWD,	
8	PAOZZ	39572	Q350	CIRCUIT BREAKER	1
				UOC: LAD, LWD,	
9	PAOZZ	66842	Q330	CIRCUIT BREAKER	1
				UOC: LAD, LWD,	
10	PAOZZ	81348	WC375/05-002	CIRCUIT BREAKER	3
				UOC: LAD, LWD,	
11	PAOZZ	81348	WC375/05-001	CIRCUIT BREAKER	3
				UOC: LAD, LWD,	
12	PAOZZ	96906	MS51957-81	SCREW, MACHINE 1/4-20 X 3/4	4
				UOC: LAD, LWD,	
13	XDOZZ	19207	12416511	PLATE, DOUBLER	2
				UOC: LAD, LWD,	
14	PAOZZ	96906	MS35338-139	WASHER, LOCK	4
				UOC: LAD, LWD,	
15	PAOZZ	03481	S25B200	NUT, PLAIN, BLIND RIV 1/4-20	4
				UOC: LAD, LWD,	
				END OF FIGURE	

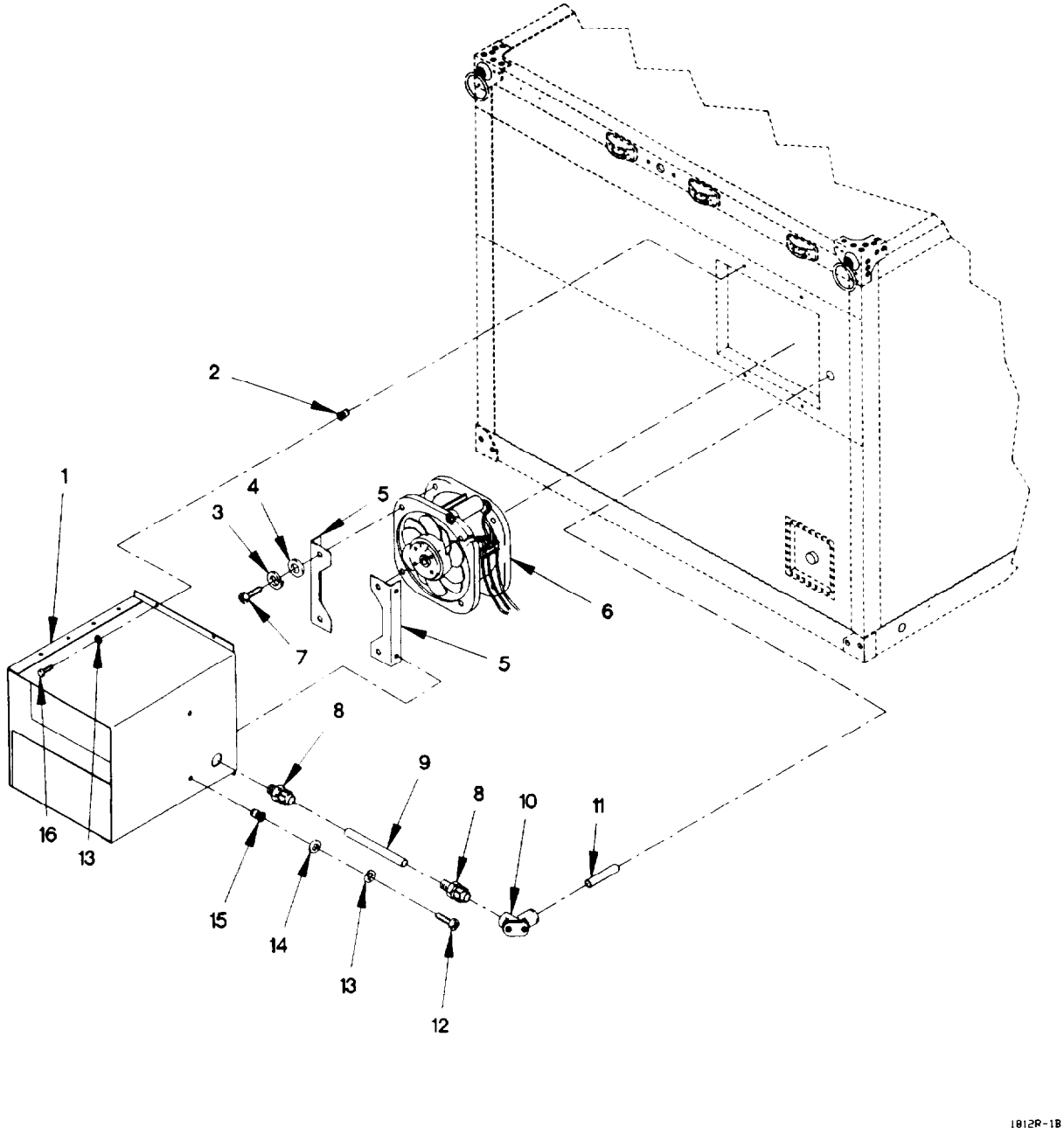

Figure 233. Van Exhaust Fan Assembly

(1) ITEM NO	(2) SMR CODE	(3) FSCM	(4) PART NUMBER	(5) DESCRIPTION AND USABLE ON CODE (UOC)	(6) QTY
				GROUP 1812: SPECIAL PURPOSE BODIES	
				FIG. 233 VAN EXHAUST FAN ASSEMBLY	
1	PAOZZ	0FW39	12416602	SHROUD, FAN, RADIATOR UOC: LAD, LWD,	1
2	PAOZZ	80063	SM-C-563711-2	NUT, PLAIN, BLIND RIV UOC: LAD, LWD,	4
3	PAOZZ	96906	MS35338-138	WASHER, LOCK UOC: LAD, LWD,	4
4	PAOZZ	96906	MS15795-847	WSHER, FLAT UOC: LAD, LWD,	4
5	PAOZZ	19207	12421551	ANGLE UOC: LAD, LWD,	2
6	PAOZZ	62292	W2E 200-HH86-01	FAN UOC: LAD, LWD,	1
7	PAOZZ	96906	MS35207-265	SCREW, MACHINE #10-32 X 3/4 UOC: LAD, LWD,	4
8	PAOZZ	81348	A-A-50553-1-2-B-1-01-A	ADAPTER, ELECTRICAL UOC: LAD, LWD,	2
9	MOOZZ	19207	12416357-001	CONDUIT, 1/2 INCH UOC: LAD, LWD,	1
10	PAOZZ	0FW39	12421665-001	ELBOW, ELECTRICAL, CO UOC: LAD, LWD,	1
11	MOOZZ	19207	12416357-002	CONDUIT, 1/2 INCH UOC: LAD, LWD,	2
12	PAOZZ	96906	MS35308-308	SCREW, CAP, HEXAGON H UOC: LAD, LWD,	4
13	PAOZZ	96906	MS35338-139	WASHER, LOCK UOC: LAD, LWD,	4
14	PAOZZ	96906	MS15795-810	WASHER, FLAT UOC: LAD, LWD,	4
15	PAOZZ	84256	AKS7-428-165	INSERT, SCREW THREAD UOC: LAD, LWD,	4
16	PAOZZ	96906	MS35307-305	SCREW, CAP, HEXAGON H 1/4-20 X 5/8 UOC: LAD, LWD,	4
				END OF FIGURE	

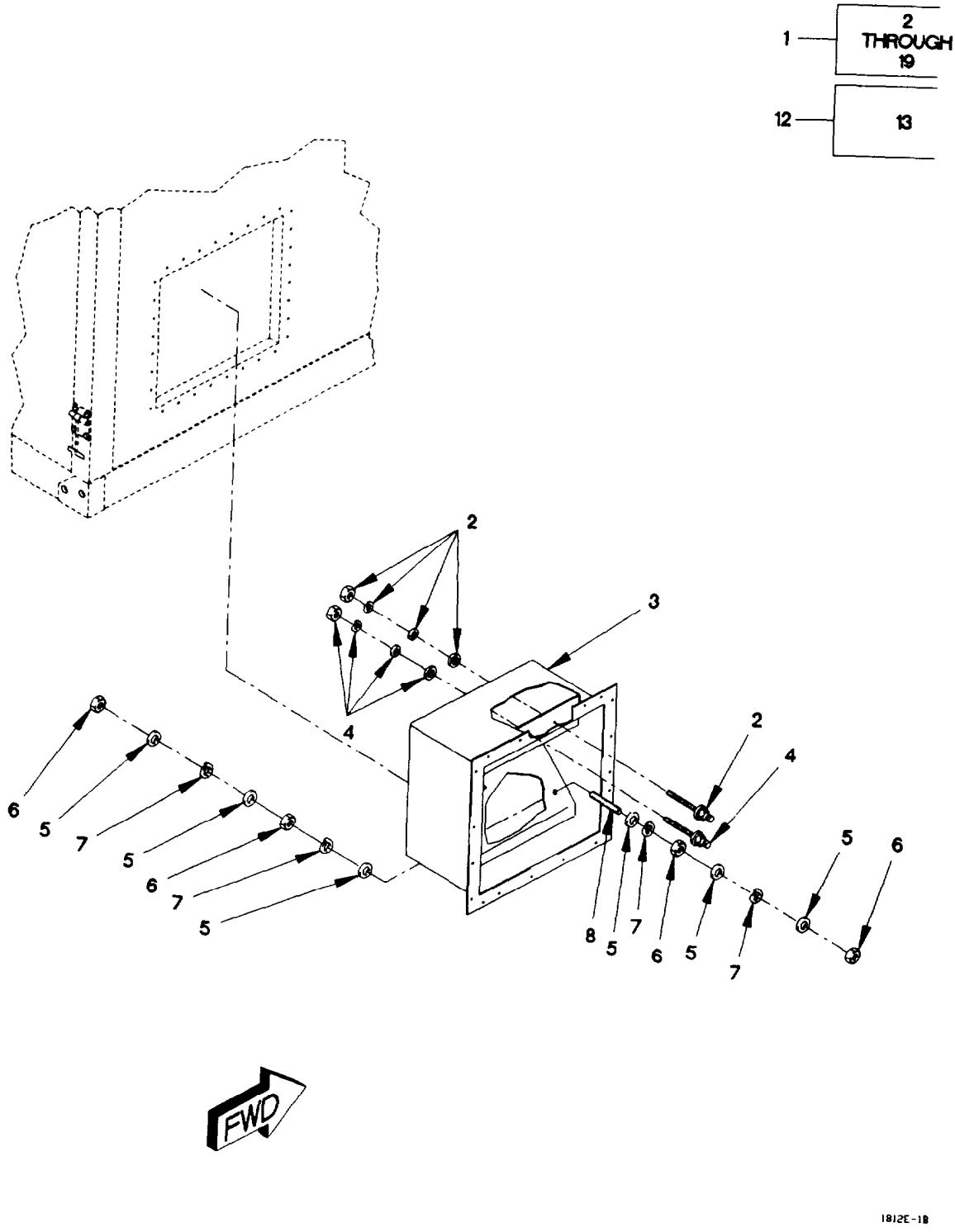

Figure 234. Van 110/208V Power Panel (Sheet 1 of 2)

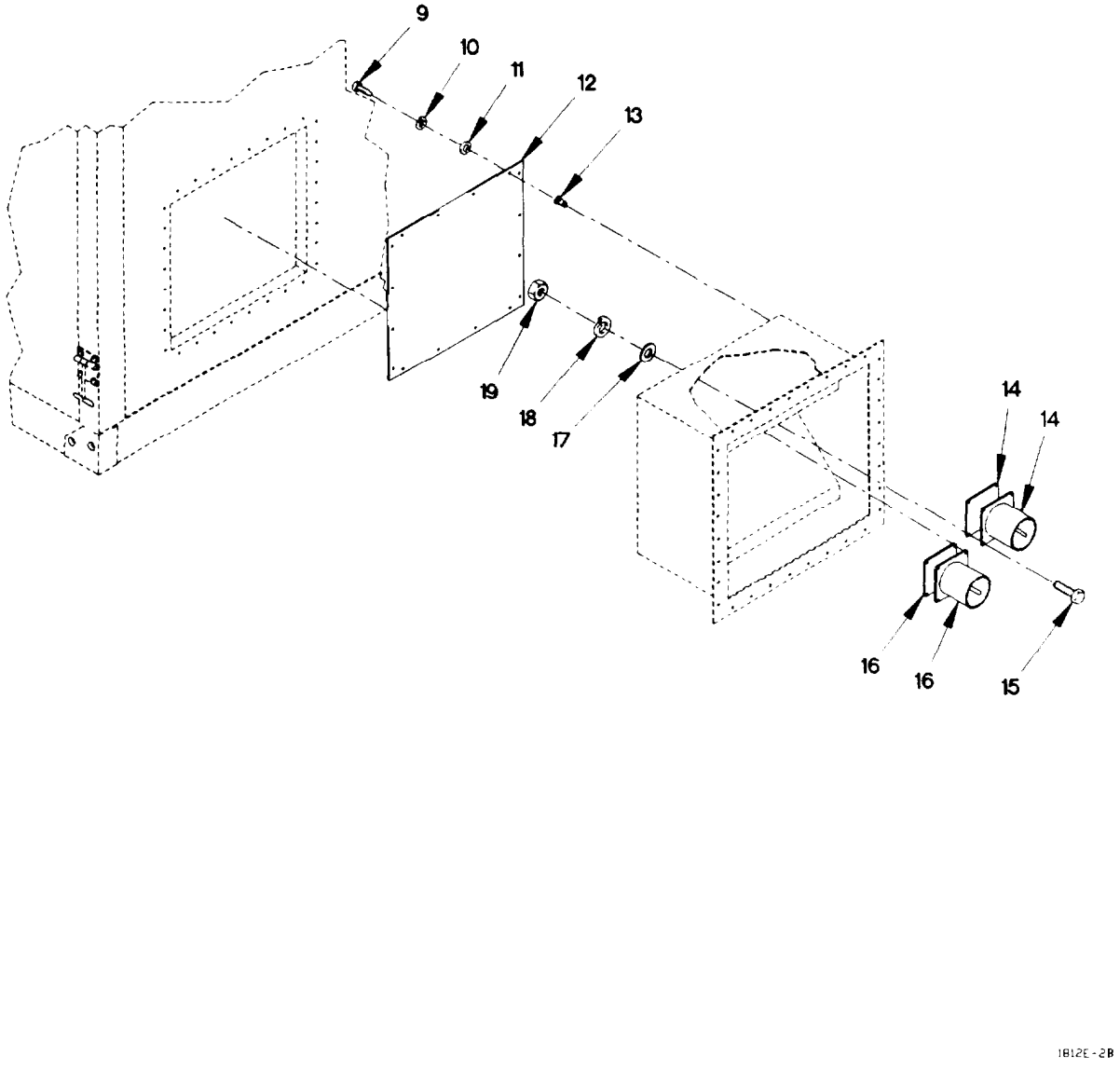

Figure 234. Van 110/208V Power Panel (Sheet 2 of 2)

(1) ITEM NO	(2) SMR CODE	(3) FSCM	(4) PART NUMBER	(5) DESCRIPTION AND USABLE ON CODE (UOC)	(6) QTY
				GROUP 1812: SPECIAL PURPOSE BODIES	
				FIG. 234 VAN 110/208V POWER PANEL	
1	XDOOO	19207	12421687	PANEL ASSEMBLY 110V POWER ENTRY	1
				UOC: LAD, LWD,	
2	PAOZZ	81349	M55149/08-NA-01	.POST, BINDING, ELECTR	1
				UOC: LAD, LWD,	
3	XDOOO	19207	12421690	.PANEL 110V POWER ENTRY	1
				UOC: LAD, LWD,	
4	PAOZZ	81349	M55149/08-NA-02	.POST, BINDING, ELECTR	1
				UOC: LAD, LWD,	
5	PAOZZ	96906	MS15795-814	.WASHER, FLAT 13/32	6
				UOC: LAD, LWD,	
6	PAOZZ	96906	MS35650-3384	.NUT, PLAIN, HEXAGON	4
				UOC: LAD, LWD,	
7	PAOZZ	96906	MS35338-141	.WASHER, LOCK 3/8	4
				UOC: LAD, LWD,	
8	PAOZZ	80205	NAS1454C6-0300	.STUD, CONTINIOUS, TH	1
				UOC: LAD, LWD,	
9	PAOZZ	96906	MS35207-264	.SCREW, MACHINE #10-32 X 5/8	28
				UOC: LAD, LWD,	
10	PAOZZ	96906	MS35338-138	.WASHER, LOCK #10	28
				UOC: LAD, LWD,	
11	PAOZZ	96906	MS27183-42	.WASHER, FLAT 7/32	28
				UOC: LAD, LWD,	
12	XDOZZ	19207	12421689	.COVER, ACCESS	1
				UOC: LAD, LWD,	
13	PAOZZ	80205	NAS1330S3B166	. .NUT, PLAIN, BLIND, RIV #10-32	28
				UOC: LAD, LWD,	
14	PAOZZ	96906	MS90558C44412P	.CONNECTOR, RECEPTACL	1
				UOC: LAD, LWD,	
15	PAOZZ	96906	MS51958-84	.SCREW, MACHINE	8
				UOC: LAD, LWD,	
16	PAOZZ	96906	MS90558C44412S	.CONNECTOR, RECEPTACL	1
				UOC: LAD, LWD,	
17	PAOZZ	96906	MS15795-810	.WASHER, FLAT	8
				UOC: LAD, LWD,	
18	PAOZZ	96906	MS35338-139	.WASHER, LOCK	8
				UOC: LAD, LWD,	
19	PAOZZ	96906	MS35650-3254	.NUT, PLAIN, HEXAGON	8
				UOC: LAD, LWD,	
				END OF FIGURE	

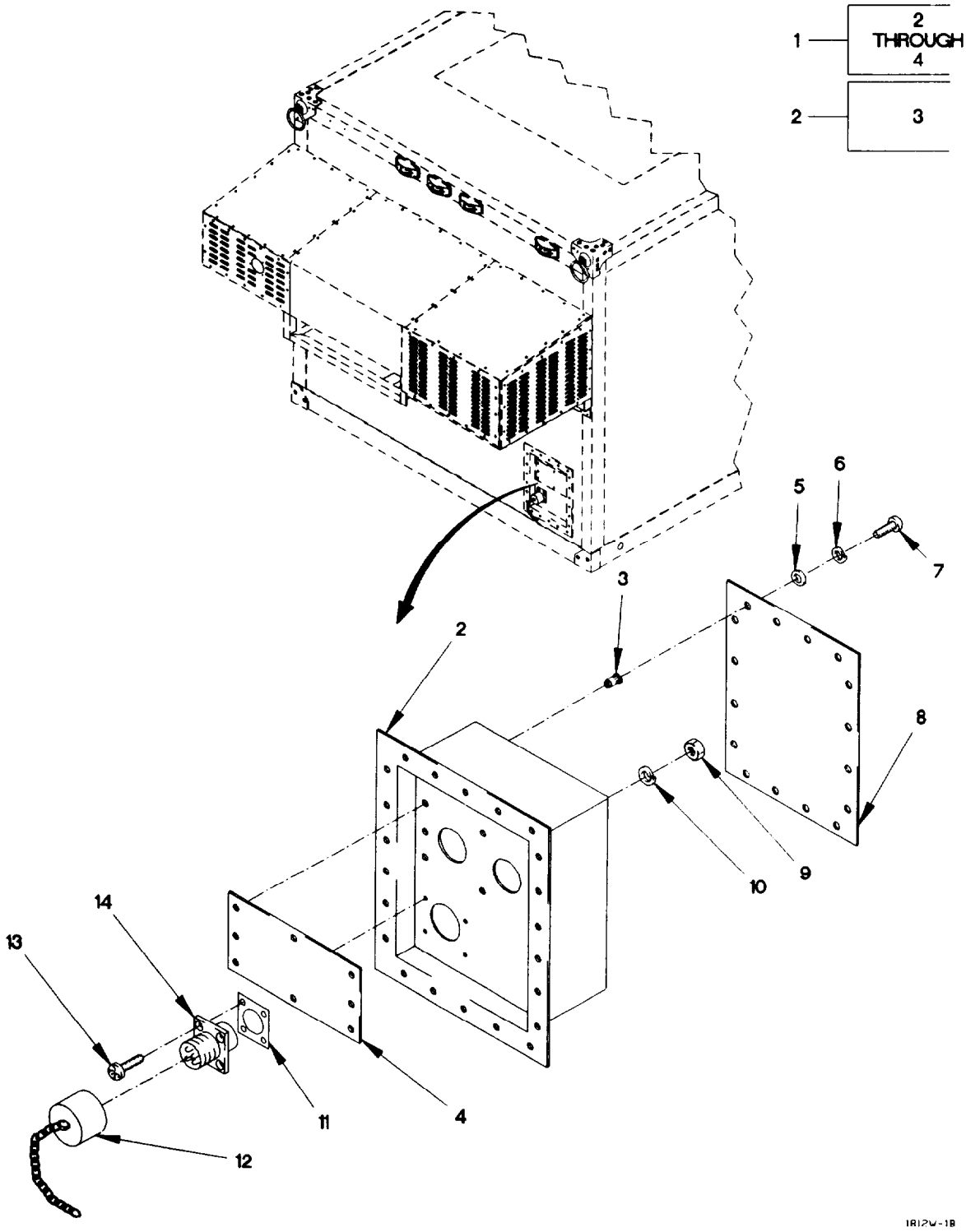

Figure 235. Van 12/24V Power Panel (Sheet 1 of 2)

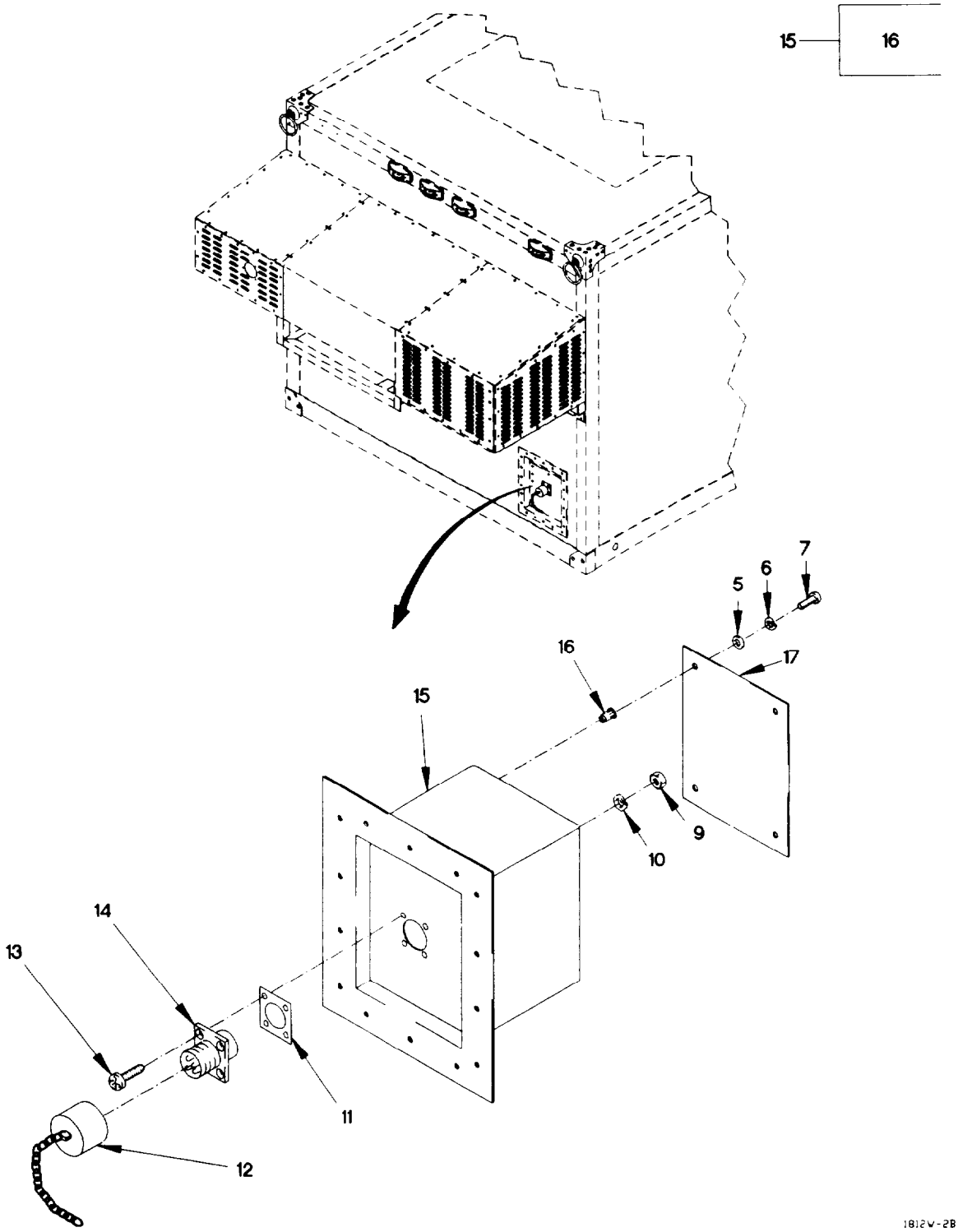

Figure 235. Van 12/24V Power Panel (Sheet 2 of 2)

(1) ITEM NO	(2) SMR CODE	(3) FSCM	(4) PART NUMBER	(5) DESCRIPTION AND USABLE ON CODE (UOC)	(6) QTY
				GROUP 1812: SPECIAL PURPOSE BODIES	
				FIG. 235 VAN 12/24V POWER PANEL	
1	PAOOO	19207	12421656	PANEL, 12/24V POWER	1
				UOC: LAD, LWD,	
2	XAOZZ	19207	12416354	.PANEL, ELECTRICAL-EL	1
				UOC: LAD, LWD,	
3	PAOZZ	80205	NAS1330S3B166	. .NUT, PLAIN, BLIND, RIV #10-32	16
				UOC: LAD, LWD,	
4	XAOZZ	19207	12421659	.PLATE, ADAPTER	1
				UOC: LAD, LWD,	
5	PAOZZ	96906	MS27183-42	WASHER, FLAT #10	16
				UOC: LAD, LWD,	
5	PAOZZ	96906	MS27183-42	WASHER, FLAT	4
				UOC: LAD, LWD,	
6	PAOZZ	96906	MS35338-138	WASHER, LOCK #10	16
				UOC: LAD, LWD,	
6	PAOZZ	96906	MS35338-138	WASHER, LOCK #10	100
				UOC: LAD, LWD,	
7	PAOZZ	96906	MS51957-45	SCREW, MACHINE #8-32 X 1/2	16
				UOC: LAD, LWD,	
7	PAOZZ	96906	MS51957-45	SCREW, MACHINE #8-32 X 1/2	4
				UOC: LAD, LWD,	
8	PAOZZ	19207	12416502	COVER, ACCESS	1
				UOC: LAD, LWD,	
9	PAOZZ	96906	MS35649-244	NUT, PLAIN, HEXAGON 1/8 X 40	4
				UOC: LAD, LWD,	
10	PAOZZ	96906	MS35338-135	WASHER, LOCK NO. 4	4
				UOC: LAD, LWD,	
11	PAOZZ	0FW39	12422254	GASKET	1
				UOC: LAD, LWD,	
12	PAOZZ	96906	MS25043-22DA	COVER, ELECTRICAL CO	1
				UOC: LAD, LWD,	
13	PAOZZ	96906	MS35206-218	SCREW, MACHINE	4
				UOC: LAD, LWD,	
14	PAOZZ	96906	MS3102R22-23P	CONNECTOR, RECEPTACL	1
				UOC: LAD, LWD,	
15	XDOZZ	19207	12421608	DC POWER PANEL ASSE	1
				UOC: LAD, LWD,	
16	PAOZZ	80205	NAS1330S3B166	.NUT, PLAIN, BLIND, RIV #10-32	4
				UOC: LAD, LWD,	
17	PFOZZ	19207	12421510	COVER 24VDC POWER	1
				UOC: LAD, LWD,	
				END OF FIGURE	

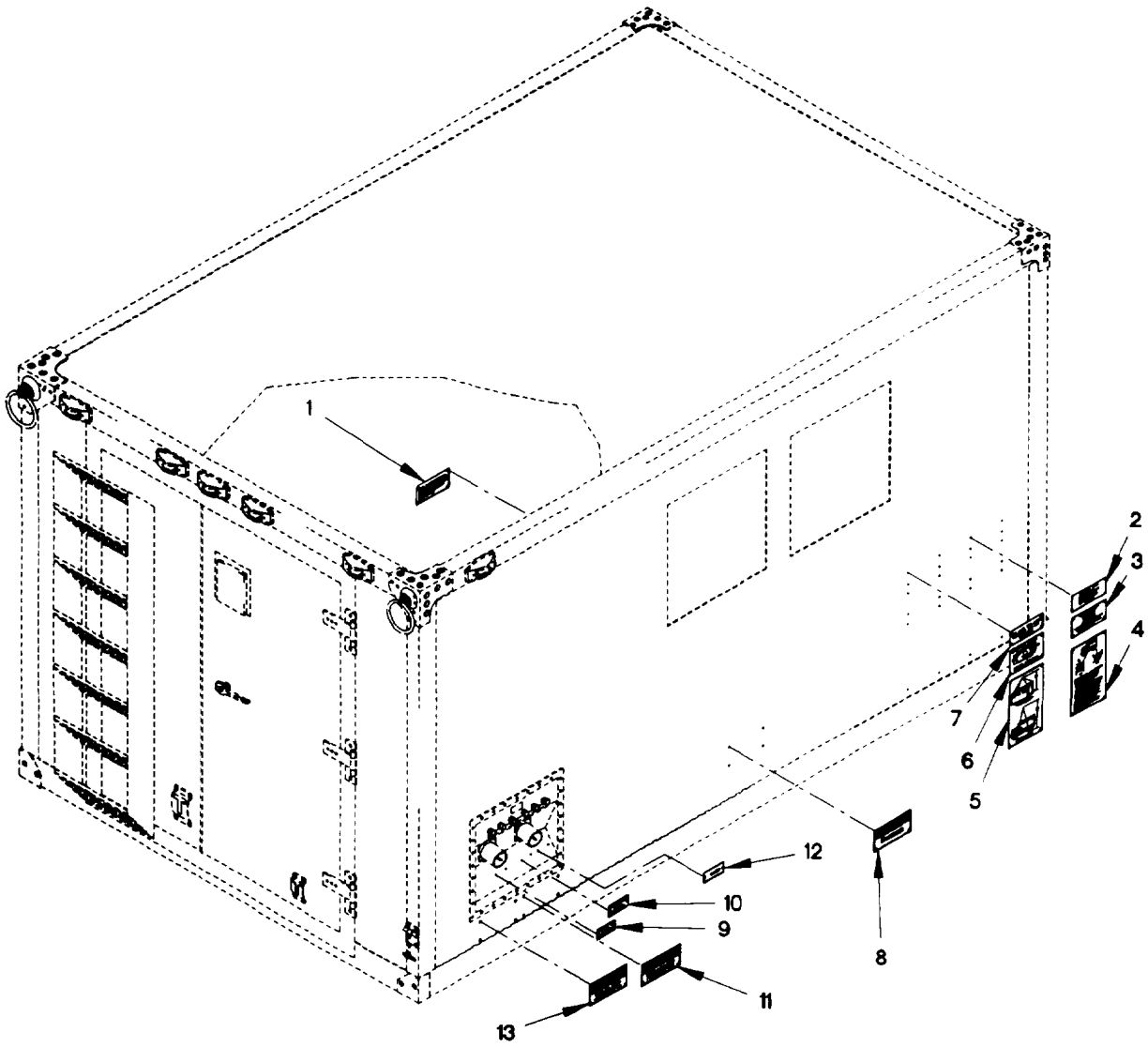

Figure 236. Van Data and Identification Plates (Sheet 1 of 3)

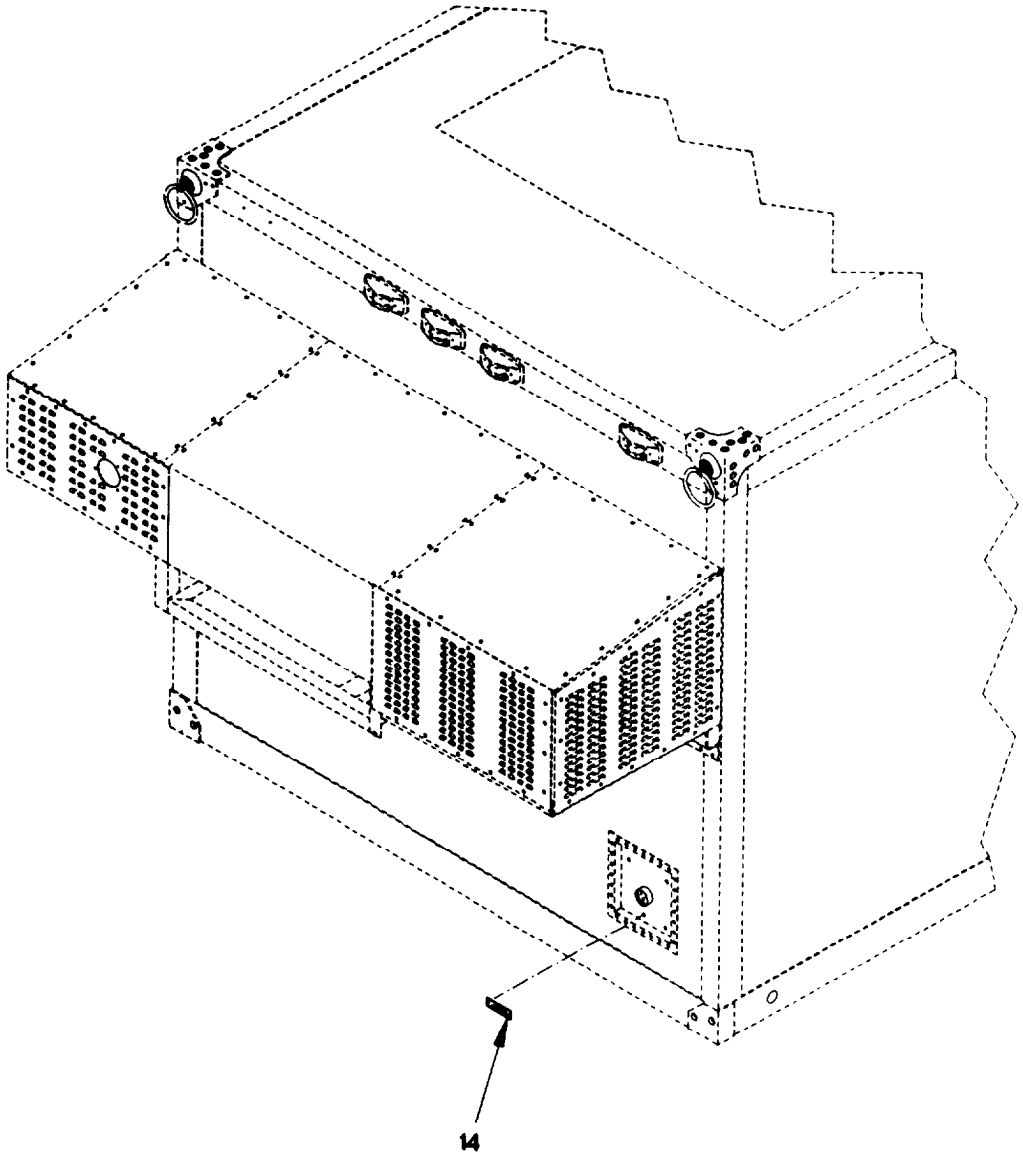

1812B-2B

Figure 236. Van Data and Identification Plates (Sheet 2 of 3)

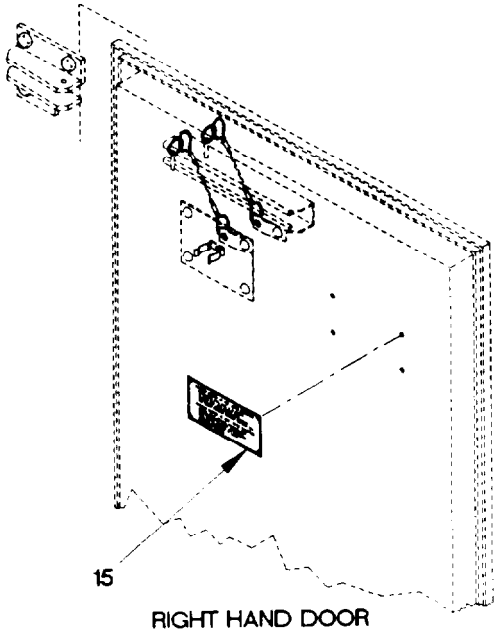

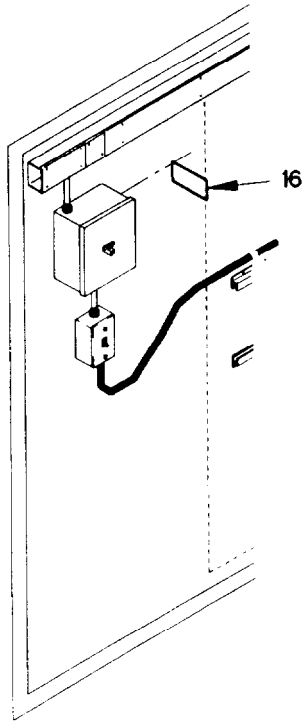

Figure 236. Van Data and Identification Plates (Sheet 3 of 3)

(1) ITEM NO	(2) SMR CODE	(3) FSCM	(4) PART NUMBER	(5) DESCRIPTION AND USABLE ON CODE (UOC)	(6) QTY
				GROUP 1812: SPECIAL PURPOSE BODIES FIG. 236 VAN DATA AND IDENTIFICATION PLATES	
1	PAOZZ	19207	12421457	PLATE, INSTRUCTION RAIL SHIPMENT UOC: LAD, LWD,	1
2	PAOZZ	19207	12416546	PLATE, IDENTIFICATIO VAN, SHOP, M1079 UOC: LAD, LWD,	1
3	PFOZZ	19207	12416548	PLATE, INSTRUCTION PAINT UOC: LAD, LWD,	1
4	PAOZZ	19207	12416551	PLATE, INSTRUCTION UOC: LAD, LWD,	1
5	PAOZZ	19207	12416550	PLATE, INSTRUCTION TRANSPORTATION UOC: LAD, LWD,	1
6	PAOZZ	19207	12416547	PLATE, INSTRUCTION AIRCRAFT LOADING UOC: LAD, LWD,	1
7	PAOZZ	19207	12416549	PLATE, INSTRUCTION AIRBORNE UOC: LAD, LWD,	1
8	XDOZZ	0FW39	12415763	PLATE, CAUTION EXTEND SPREADER BARDS UOC: LAD, LWD,	2
9	PAOZZ	19207	12416481-001	PLATE, IDENTIFICATIO AC POWER IN UOC: LAD, LWD,	1
10	PAOZZ	19207	12416481-002	PLATE, IDENTIFICATIO AC POWER OUT UOC: LAD, LWD,	1
11	PAOZZ	19207	12416554	PLATE, INSTRUCTION WARNING UOC: LAD, LWD,	1
12	PAOZZ	19207	12416552-001	PLATE, IDENTIFICATIO GND UOC: LAD, LWD,	1
13	PAOZZ	19207	12416555	PLATE, INSTRUCTION CAUTION, AC POWER UOC: LAD, LWD,	1
14	PAOZZ	19207	12416552-002	PLATE, IDENTIFICATIO 24 VDC UOC: LAD, LWD,	1
15	PAOZZ	19207	12416576	PLATE, INSTRUCTION DOOR UOC: LAD, LWD,	1
16	PAOZZ	19207	12421458	PLATE, INSTRUCTION CIRCUIT BREAKER UOC: LAD, LWD,	1
				END OF FIGURE	

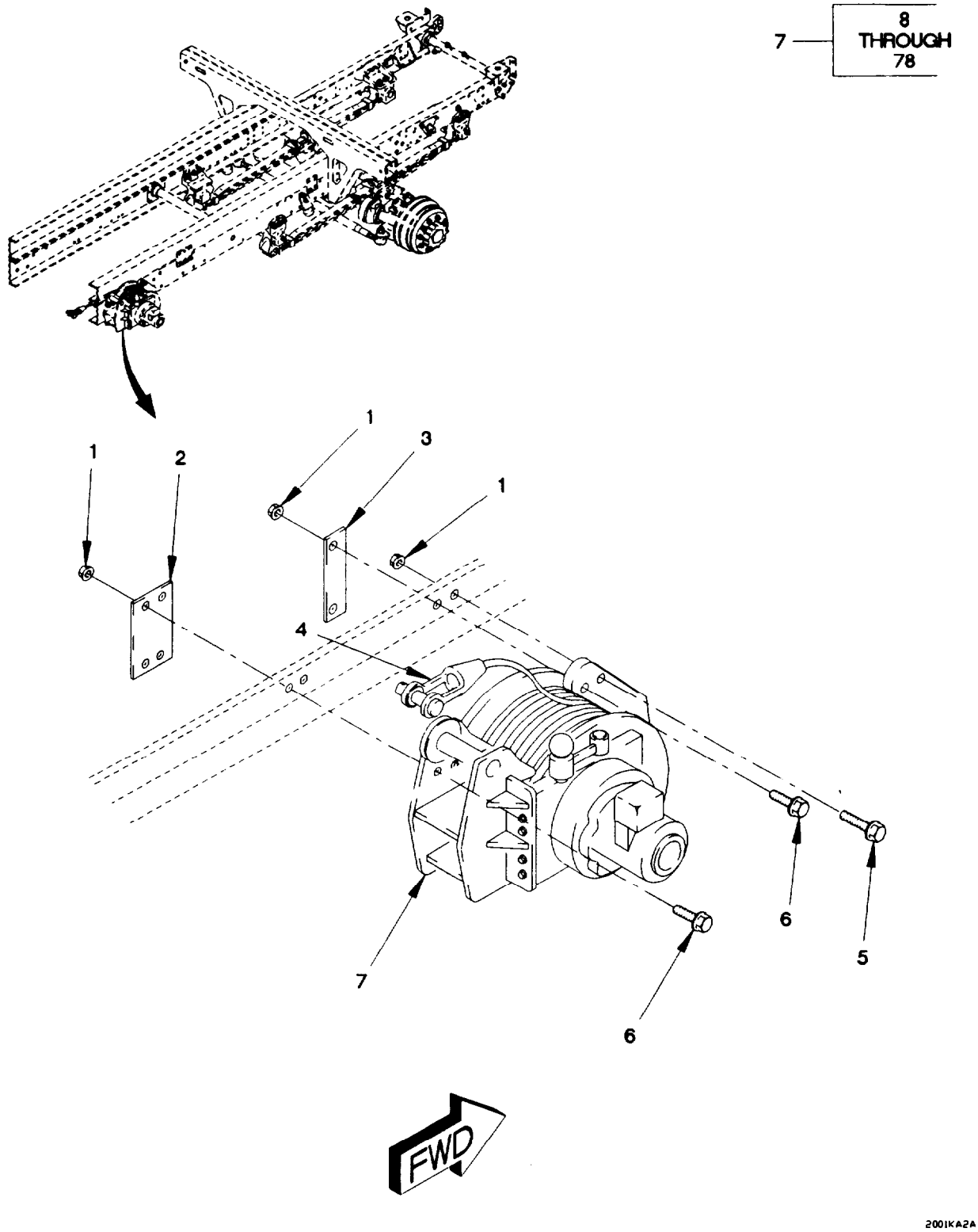

Figure 237. 11K Self Recovery Winch Assembly (Sheet 1 of 4)

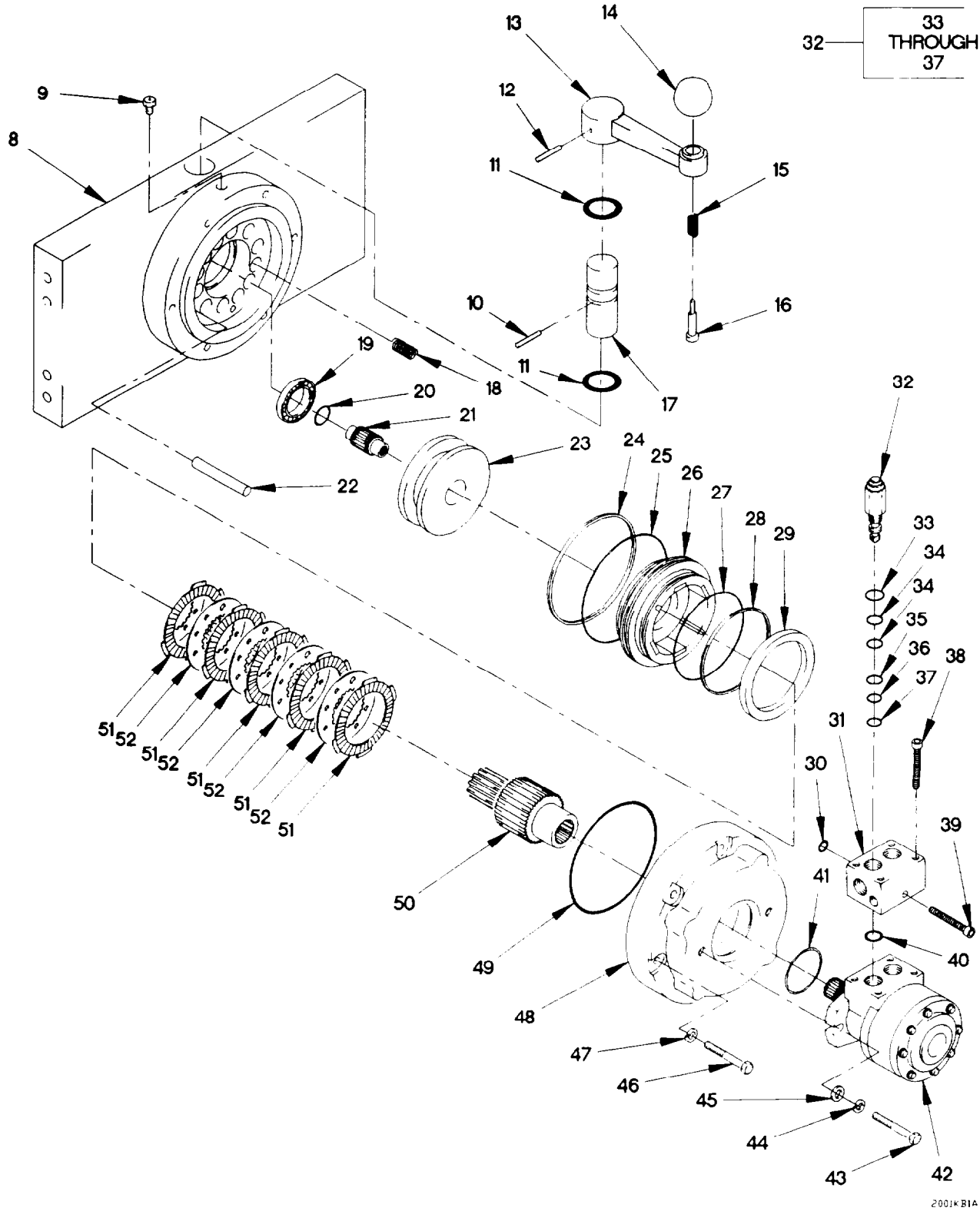

Figure 237. 11K Self Recovery Winch Assembly (Sheet 2 of 4)

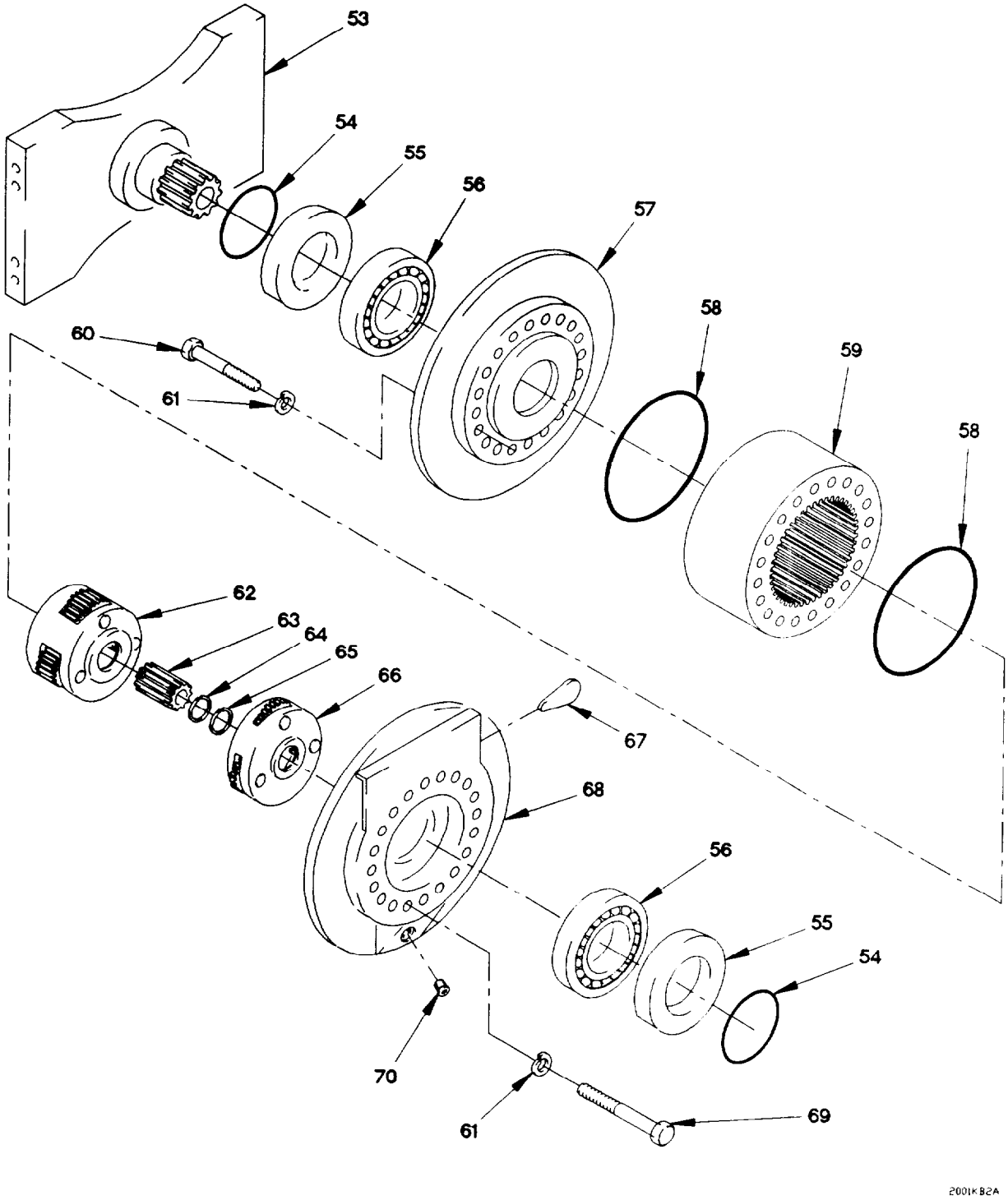

Figure 237. 11K Self Recovery Winch Assembly (Sheet 3 of 4)

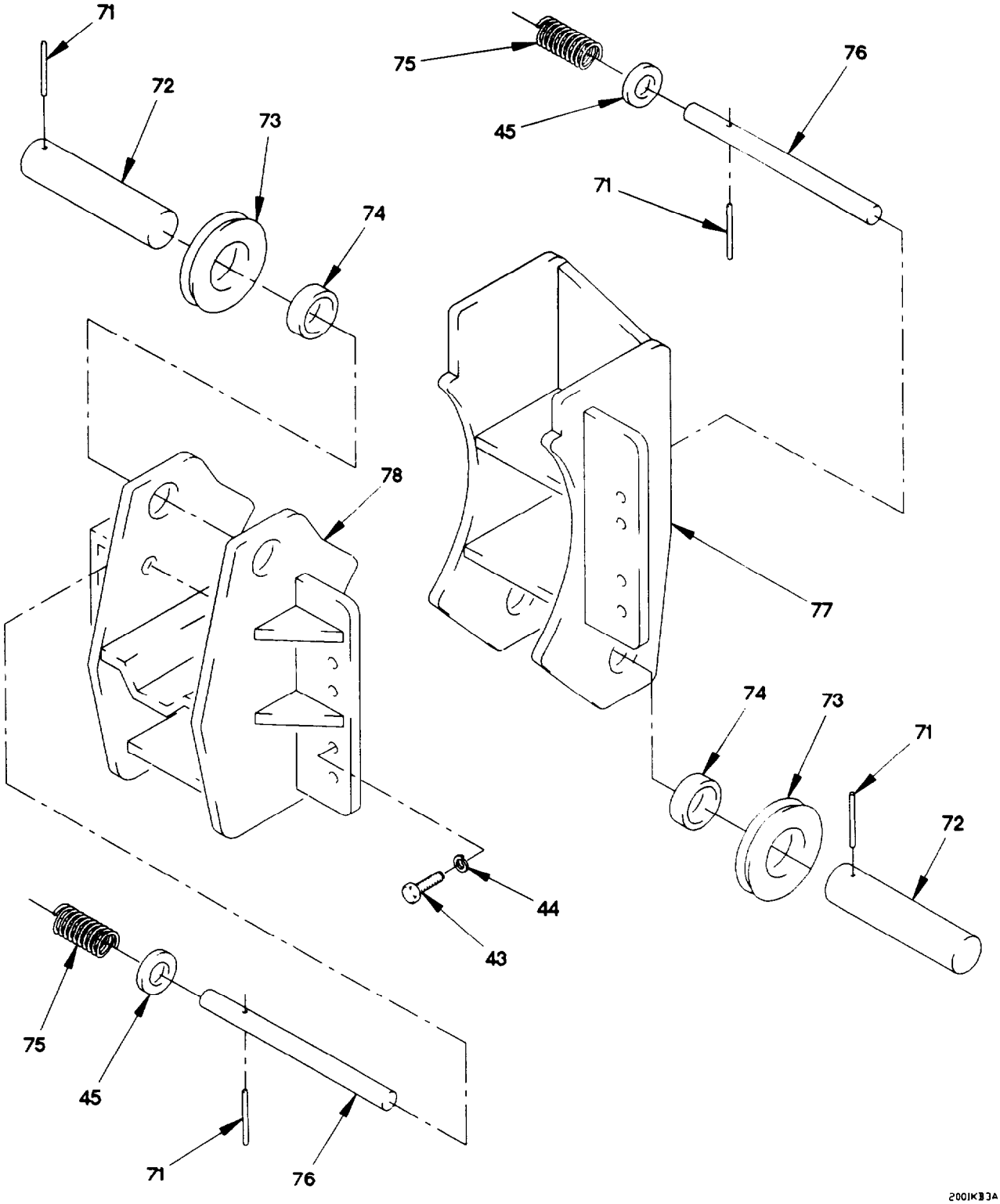

Figure 237. 11K Self Recovery Winch Assembly (Sheet 4 of 4)

(1) ITEM NO	(2) SMR CODE	(3) FSCM	(4) PART NUMBER	(5) DESCRIPTION AND USABLE ON CODE (UOC)	(6) QTY
				GROUP 2001: HOIST, CAPSTAN, WINDLASS, CRANE, OR WINCH ASSEMBLY	
				FIG. 237 11K SELF RECOVERY WINCH ASSEMBLY	
1	PAFZZ	19207	12414308-025	NUT, SELF-LOCKING, EX M16 X 1.5	8
				UOC: LWB, LWC, LWD,	
2	PAFZZ	19207	12419014	PLATE, MOUNTING	1
				UOC: LWB, LWC, LWD,	
3	PAFZZ	19207	12419018	PLATE, MOUNTING	1
				UOC: LWB, LWC, LWD,	
4	PAOZZ	7S918	F002	WIRE ROPE ASSEMBLY,	1
				UOC: LWB, LWC, LWD,	
5	PAFZZ	19207	12414307-143	BOLT, MACHINE M16 X 1.5 X 60	2
				UOC: LWB, LWC, LWD,	
6	PAFZZ	19207	12414307-141	BOLT, MACHINE M16 X 1.5 X 50	6
				UOC: LWB, LWC, LWD,	
7	PAFZZ	0EJ14	51954	WINCH, DRUM, VEHICLE 11K	1
				UOC: LWB, LWC, LWD,	
8	PAFZZ	0EJ14	13162	.SUPPORT, ELECTRIC MO	1
				UOC: LWB, LWC, LWD,	
9	PAFZZ	57733	47200	.VALVE, SAFETY RELIEF	1
				UOC: LWB, LWC, LWD,	
10	PFFZZ	0EJ14	3182	.PIN, SPRING 3/16 DIA, 1-1/4 LG PART OF K	
				UOC: LWB, LWC, LWD,	
11	KFFZZ	0EJ14	9804	.PACKING, PREFORMED, 3 3/4 ID X 1/8	2
				SECTION PART OF KIT P/N 9402	
				UOC: LWB, LWC, LWD,	
12	KFFZZ	0EJ14	3325	.PIN, SPRING, 1/4 DIA, 1/4 DIA, 1-1/4	1
				LG PART OF KIT P/N 9402	
				UOC: LWB, LWC, LWD,	
13	PAFZZ	0EJ14	11954	.SHIFTER FORK	1
				UOC: LWB, LWC, LWD,	
14	PAFZZ	0EJ14	3365	.KNOB	1
				UOC: LWB, LWC, LWD,	
15	PAFZZ	0EJ14	2322	.SPRING, HELICAL, COMP	1
				UOC: LWB, LWC, LWD,	
16	PAFZZ	0EJ14	11969	.BOLT, SHOULDER	1
				UOC: LWB, LWC, LWD,	
17	PAFZZ	0EJ14	12376	.SHAFT, SHOULDERED	1
				UOC: LWB, LWC, LWD,	
18	PAFZZ	0EJ14	2319	.SPRING, HELICAL, COMP PART OF KIT P/N	12
				9401	
				UOC: LWB, LWC, LWD,	
19	PAFZZ	0EJ14	81434	.BEARING, BALL, ANNULA 1-3/4 ID	1
				UOC: LWB, LWC, LWD,	
20	KFFZZ	0EJ14	3485	.RING, RETAINING, 1-5/ 1-5/8 ID	1
				PART OF KIT P/N 9401	
				UOC: LWB, LWC, LWD,	

(1) ITEM NO	(2) SMR CODE	(3) FSCM	(4) PART NUMBER	(5) DESCRIPTION AND USABLE ON CODE (UOC)	(6) QTY
21	PAFZZ	0EJ14	12719	.GEARSHAFT, MULTIPLE UOC: LWB, LWC, LWD,	1
22	PAFZZ	0EJ14	3263	.PIN, STRAIGHT, HEADLE 5/16 DIA, 3-1/2 LG UOC: LWB, LWC, LWD,	2
23	PAFZZ	0EJ14	12088	.SLEEVE, SLIDING, MECH UOC: LWB, LWC, LWD,	1
24	PFFZZ	0EJ14	9854	.RING 6-1/2 ID PART OF KIT P/N 9403 UOC: LWB, LWC, LWD,	1
25	PFFZZ	0EJ14	9853	.PACKING, PREFORMED 6-1/2 ID X 3/16 SECTION PART OF KIT P/N 9403 UOC: LWB, LWC, LWD,	1
26	PAFZZ	0EJ14	12377	.PISTON, HYDRAULIC BR UOC: LWB, LWC, LWD,	1
27	PFFZZ	0EJ14	9851	.PACKING, PREFORMED -3/8 ID X 3/16 SECTION PART OF KIT P/N 9403 UOC: LWB, LWC, LWD,	1
28	PFFZZ	0EJ14	9852	.RING 5-3/8 ID PART OF KIT P/N 9403 UOC: LWB, LWC, LWD,	1
29	PAFZZ	58864	11486	.WASHER, FLAT UOC: LWB, LWC, LWD,	1
30	PAFZZ	0EJ14	9612	.O-RING 3/32 ID X 3/32 SECTION PART OF KIT P/N 9402 UOC: LWB, LWC, LWD,	1
31	PAFZZ	0EJ14	12543	.VALVE, LINEAR, DIRECT UOC: LWB, LWC, LWD,	1
32	PAFZZ	0EJ14	70040	.VALVE, CHECK UOC: LWB, LWC, LWD,	1
33	KFFZZ	0EJ14	9628-G	. .RING, BACK-UP PART OF KIT P/N 9638 UOC: LWB, LWC, LWD,	1
34	KFFZZ	0EJ14	9629-G	. .PACKING, PREFORMED PART OF KIT P/N 9638 UOC: LWB, LWC, LWD,	2
35	KFFZZ	0EJ14	9955	. .RING, BACK-UP PART OF KIT P/N 9638 UOC: LWB, LWC, LWD,	1
36	KFFZZ	0EJ14	9842	. .RING, BACK-UP PART OF KIT P/N 9638 UOC: LWB, LWC, LWD,	1
37	KFFZZ	0EJ14	9839	. .PACKING, PREFORMED PART OF KIT P/N 9638 UOC: LWB, LWC, LWD,	1
38	PAFZZ	0EJ14	1279-P	.SCREW, CAP, SOCKET HE 5/16NC X 2-1/2 UOC: LWB, LWC, LWD,	4

(1) ITEM NO	(2) SMR CODE	(3) FSCM	(4) PART NUMBER	(5) DESCRIPTION AND USABLE ON CODE (UOC)	(6) QTY
39	PAFZZ	0EJ14	1270	.SCREW, CAP, SOCKET HE 1/4NC X 3 UOC: LWB, LWC, LWD,	1
40	PAFZZ	0EJ14	9972	.O-RING 5/8 ID X 3/32 SECTION PART OF KIT P/N 9402 UOC: LWB, LWC, LWD,	1
41	PAFZZ	58864	9637	.GASKET PART OF KIT P/N 9402 UOC: LWB, LWC, LWD,	1
42	PAFZZ	0EJ14	73169	.MOTOR, HYDRAULIC UOC: LWB, LWC, LWD,	1
43	PAFZZ	0EJ14	1402	.SCREW, CAP, HEXAGON H 1/2NC X 1-1/4 UOC: LWB, LWC, LWD,	18
44	PAFZZ	0EJ14	1495	.WASHER, LOCK UOC: LWB, LWC, LWD,	18
45	PAFZZ	0EJ14	1498	.WASHER, FLAT 3/8 UOC: LWB, LWC, LWD,	4
46	PAFZZ	0EJ14	1376	.SCREW, CAP, HEXAGON H 7/16NC X 2-1/2 UOC: LWB, LWC, LWD,	6
47	PAFZZ	0EJ14	1388	.WASHER, LOCK 7/16 UOC: LWB, LWC, LWD,	6
48	PAFZZ	0EJ14	12726	.HOUSING, MECHANICAL UOC: LWB, LWC, LWD,	1
49	PFFZZ	0EJ14	9844	.O-RING -3/4 ID X 1/8 SECTION PART OF KIT P/N 9403 UOC: LWB, LWC, LWD,	1
50	PAFZZ	0EJ14	12375	.GEAR, HELICAL UOC: LWB, LWC, LWD,	1
51	PFFZZ	0EJ14	11603	.DISC, BRAKE PART OF KIT P/N 9401 UOC: LWB, LWC, LWD,	5
52	PFFZZ	0EJ14	3159	.DISK BRAKE SHOE PART OF KIT P/N 9401 UOC: LWB, LWC, LWD,	4
53	PAFZZ	0EJ14	13247	.SUPPORT, WINCH UOC: LWB, LWC, LWD,	1
54	KFFZZ	0EJ14	9848	.PACKING, PREFORMED 3-7/8 I.D. X 1/8 PART OF KIT P/N 9402 UOC: LWB, LWC, LWD,	2
55	KFFZZ	0EJ14	9675	.SEAL, SHAFT PART OF KIT P/N 9402 UOC: LWB, LWC, LWD,	2
56	PAFZZ	0EJ14	81433-G	.BEARING, BALL, ANNULA UOC: LWB, LWC, LWD,	2
57	PFFZZ	0EJ14	13160	.HUB, BODY UOC: LWB, LWC, LWD,	1
58	KFFZZ	0EJ14	9897	.PACKING, PREFORMED 6-1/2 ID X 3/32 SECTION PART OF KIT P/N 9402 UOC: LWB, LWC, LWD,	2
59	PAFZZ	0EJ14	13148	.GEAR, INTERNAL UOC: LWB, LWC, LWD,	1

(1) ITEM NO	(2) SMR CODE	(3) FSCM	(4) PART NUMBER	(5) DESCRIPTION AND USABLE ON CODE (UOC)	(6) QTY
60	PAFZZ	80204	B1821BH038C225N	.SCREW, CAP, HEXAGON H 3/8 NC X 2-1/4 UOC: LWB, LWC, LWD,	20
61	PAFZZ	0EJ14	1395	.WASHER, LOCK 3/8 UOC: LWB, LWC, LWD,	40
62	PAFZZ	0EJ14	12730	.CARRIER ASSEMBLY, PL UOC: LWB, LWC, LWD,	1
63	KFFZZ	0EJ14	12706	.GEARSHAFT, SPUR UOC: LWB, LWC, LWD,	1
64	KFFZZ	0EJ14	3043	.RING, RETAINING 1-5/8 ID PART OF KIT P/N 9402 UOC: LWB, LWC, LWD,	1
65	KFFZZ	0EJ14	3055	.RING, RETAINING 1-9/16 ID PART OF KIT P/N 9402 UOC: LWB, LWC, LWD,	1
66	PAFZZ	0EJ14	12729	.CARRIER ASSEMBLY, PL UOC: LWB, LWC, LWD,	1
67	PAFZZ	75535	S-421-1/2	.SOCKET, WIRE ROPE UOC: LWB, LWC, LWD,	1
68	PFFZZ	0EJ14	13161	.HUB, BODY UOC: LWB, LWC, LWD,	1
69	PAFZZ	0EJ14	1309	.SCREW, CAP, HEXAGON H 3/8 NC X 2-3/4 UOC: LWB, LWC, LWD,	20
70	PAFZZ	0EJ14	3448	.PLUG, PIPE 1/4NPT UOC: LWB, LWC, LWD,	2
71	PAFZZ	96906	MS16562-50	.PIN, SPRING 3/16 DIA, 1 LG PART OF KIT P/N 9402 UOC: LWB, LWC, LWD,	1
72	PAFZZ	0EJ14	13261	.SHAFT, STRAIGHT UOC: LWB, LWC, LWD,	2
73	PAFZZ	0EJ14	12930	.PULLEY, GROOVE UOC: LWB, LWC, LWD,	2
74	PAFZZ	0EJ14	81626	.BEARING, SLEEVE UOC: LWB, LWC, LWD,	2
75	PAFZZ	0EJ14	3540	.SPRING, HELICAL, COMP 1/2 I.D. X 1-3/4 LG UOC: LWB, LWC, LWD,	2
76	PAFZZ	0EJ14	13260	.PIN, RETAINING 1/2 X 10 UOC: LWB, LWC, LWD,	2
77	PFFZZ	0EJ14	13262	.MOUNTING BASE, ELECT UOC: LWB, LWC, LWD,	1
78	PFFZZ	0EJ14	13263	.MOUNTING BASE, ELECT UOC: LWB, LWC, LWD,	1

END OF FIGURE

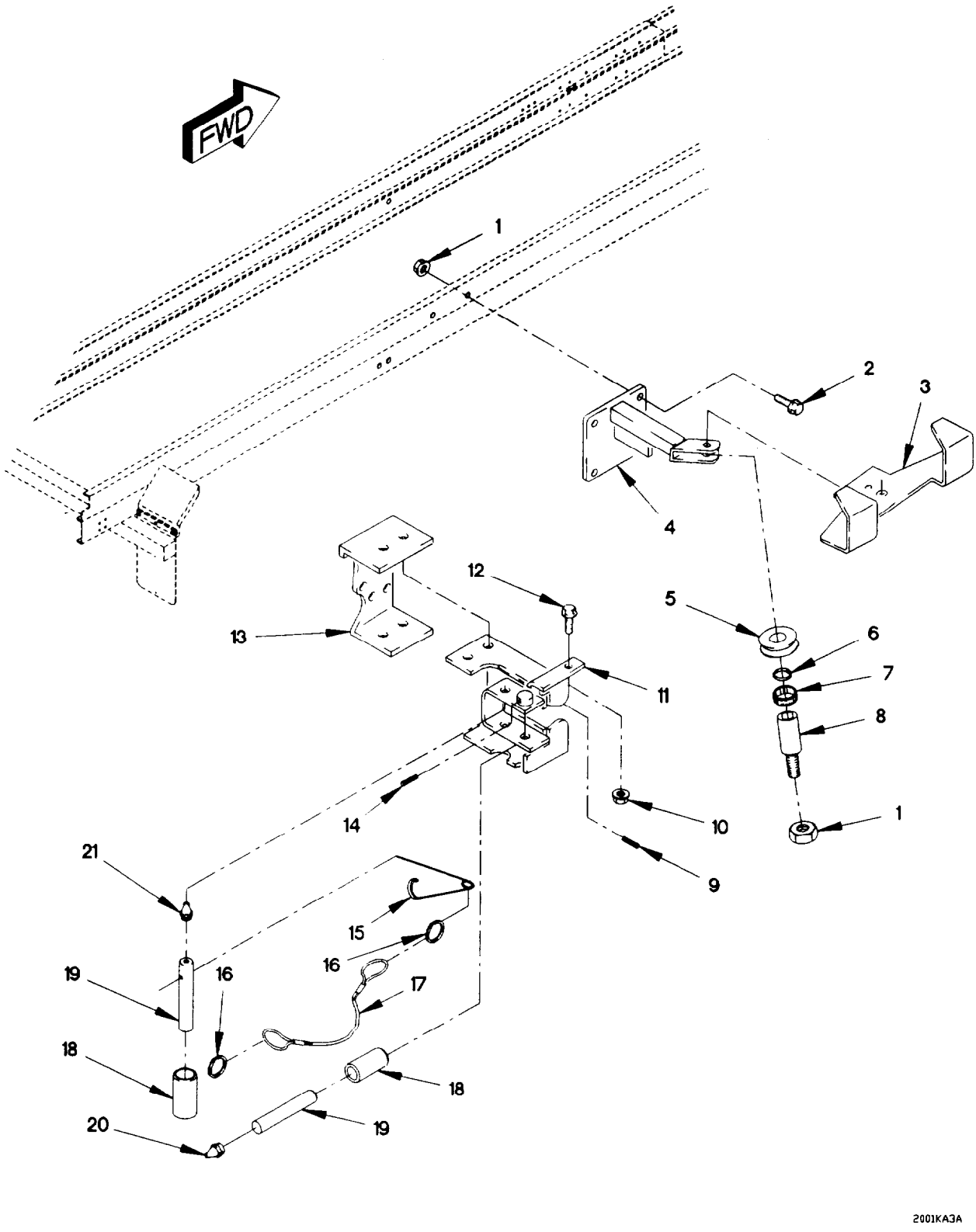

Figure 238. 11K Self Recovery Winch Cable, Guides, Rollers, and Brackets (Sheet 1 of 2)

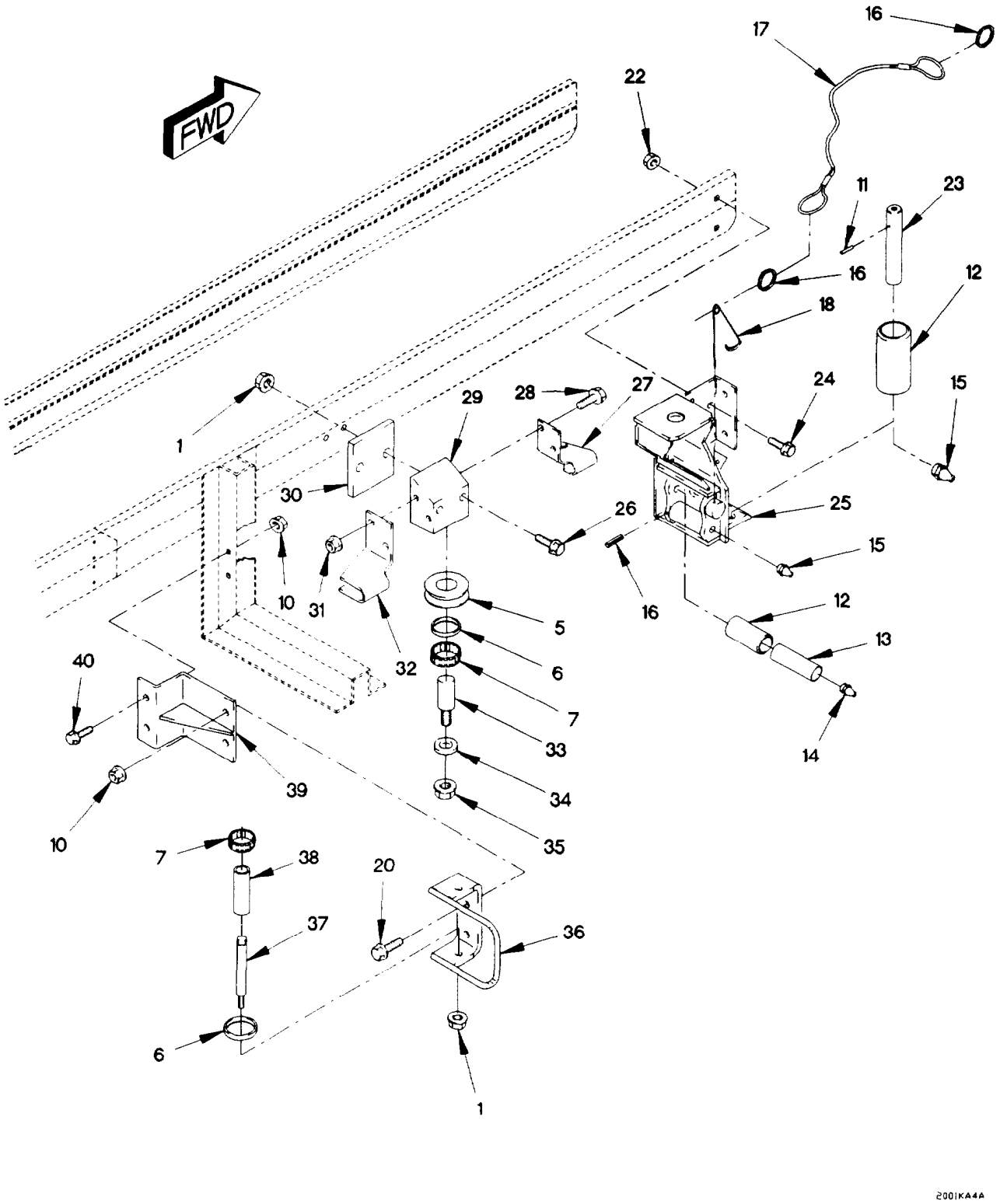

Figure 238. 11K Self Recovery Winch Cable, Guides, Rollers, and Brackets (Sheet 2 of 2)

(1) ITEM NO	(2) SMR CODE	(3) FSCM	(4) PART NUMBER	(5) DESCRIPTION AND USABLE ON CODE (UOC)	(6) QTY
				GROUP 2001: HOIST, CAPSTAN, WINDLASS, CRANE OR WINCH ASSEMBLY	
				FIG. 238 11K SELF RECOVERY WINCH CABLE, GUIDES, ROLLERS AND BRACKETS	
1	PAOZZ	19207	12414308-021	NUT, SELF-LOCKING, EX M12 X 1.5	9
				UOC: LWB, LWC, LWD,	
2	PAOZZ	19207	12414307-079	BOLT, MACHINE M12 X 1.5 X 40	4
				UOC: LWB, LWC, LWD,	
3	PAOZZ	19207	12419034-001	BRACKET MOUNTING	1
				UOC: LWB, LWC, LWD,	
4	PAOZZ	19207	12419202	BRACKET MOUNTING	1
				UOC: LWB, LWC, LWD,	
5	PAOZZ	19207	12418448	PULLEY, GROOVE	2
				UOC: LWB, LWC, LWD,	
6	PAOZZ	19207	12418450	SEAL, METALLIC, NONAI	8
				UOC: LWB, LWC, LWD,	
7	PAOZZ	0FW39	12418449	BEARING, ROLLER, NEED	6
				UOC: LWB, LWC, LWD,	
8	PAOZZ	19207	12419037	SHAFT, SHOULDERED	1
				UOC: LWB, LWC, LWD,	
9	PAOZZ	96906	MS16562-146	PIN, SPRING	2
				UOC: LWB, LWC, LWD,	
10	PAOZZ	19207	12414308-019	NUT, SELF-LOCKING, EX M10 X 1.5	6
				UOC: LWB, LWC, LWD,	
11	PAOZZ	0FW39	12417386	WELDMENT, FAIRLEAD, R	1
				UOC: LWB, LWC, LWD,	
12	PAOZZ	19207	12414307-064	BOLT, MACHINE M10 X 1.5 X 30	2
				UOC: LWB, LWC, LWD,	
13	PAOZZ	19207	12417644	BRACKET, DOUBLE ANGL	1
				UOC: LWB, LWC, LWD,	
14	PAOZZ	96906	MS16562-142	PIN, SPRING	6
				UOC: LWB, LWC, LWD,	
15	PAOZZ	0TLH4	25-05	PIN, RETAINING, SAFETY	3
16	PAOZZ	84256	13-4CD	RING, RETAINING	3
				UOC: LWB, LWC, LWD,	
17	PAOZZ	84256	50996-8W	WIRE ROPE ASSEMBLY MAKE FROM WIRE	2
				P/N: M83420/4-005 (81349) X 16MM	
				UOC: LWB, LWC, LWD,	
18	PAOZZ	19207	12417457	ROLLER, LINEAR-ROTAR	8
				UOC: LWB, LWC, LWD,	
19	PAOZZ	19207	12417458	AXLE, STRAIGHT	6
				UOC: LWB, LWC, LWD,	
20	PAOZZ	96906	MS15003-1	FITTING, LUBRICATION 1/8-NPTF	4
				UOC: LWB, LWC, LWD,	
21	PAOZZ	96906	MS15003-3	FITTING, LUBRICATION 1/8-NPTF	4
				UOC: LWB, LWC, LWD,	
22	PAOZZ	19207	12414308-025	NUT, SELF-LOCKING, EX M16 X 1.5	4
				UOC: LWB, LWC, LWD,	

(1) ITEM NO	(2) SMR CODE	(3) FSCM	(4) PART NUMBER	(5) DESCRIPTION AND USABLE ON CODE (UOC)	(6) QTY
23	PAOZZ	19207	12417459	SHAFT, STRAIGHT UOC: LWB, LWC, LWD,	2
24	PAOZZ	19207	12414307-146	BOLT, MACHINE M16 X 1.5 X 80 UOC: LWB, LWC, LWD,	2
25	PAOZZ	0FW39	12420537	BRACKET, VEHICULAR B UOC: LWB, LWC, LWD,	1
26	PAOZZ	19207	12414307-088	SCREW, CAP, HEXAGON H M12X1.5X100 UOC: LWB, LWC, LWD,	2
27	PAOZZ	19207	12418458	HANGER, CABLE UOC: LWB, LWC, LWD,	1
28	PAOZZ	19207	12414309-046	BOLT, MACHINE M10 X 1.5 X 100 UOC: LWB, LWC, LWD,	2
29	PAOZZ	19207	12418456	HANGER, CABLE UOC: LWB, LWC, LWD,	1
30	PAOZZ	19207	12419015	PLATE, MOUNTING UOC: LWB, LWC, LWD,	2
31	PAOZZ	19207	12414315-009	NUT, SELF-LOCKING, HE M10 X 1.5 UOC: LWB, LWC, LWD,	2
32	PAOZZ	19207	12419833	FAIRLEAD HALF, TUBUL UOC: LWB, LWC, LWD,	1
33	PAOZZ	19207	12418455	SHAFT, SHOULDERED UOC: LWB, LWC, LWD,	1
34	PAOZZ	19207	12414582-006	WASHER, FLAT M13 UOC: LWB, LWC, LWD,	1
35	PAOZZ	19207	12414315-011	NUT, PLAIN, HEXAGON M12 X 1.5 UOC: LWB, LWC, LWD,	1
36	PAOZZ	0FW39	12419834-003	BRACKET, DOUBLE ANGL UOC: LWB, LWC, LWD,	1
36	PAOZZ	19207	12419834	BRACKET, DOUBLE ANGL UOC: LWB, LWC, LWD,	2
37	PAOZZ	19207	12418482	AXLE, SHOULDERED UOC: LWB, LWC, LWD,	2
38	PAOZZ	19207	12418484	ROLLER, LINEAR-ROTAR UOC: LWB, LWC, LWD,	2
39	PAOZZ	0FW39	12420525	BRACKET, DOUBLE ANGL UOC: LWB, LWC, LWD,	1
40	PAOZZ	19207	12414307-066	BOLT, MACHINE M10 X 1.5 X 40 UOC: LWB, LWC, LWD,	2

END OF FIGURE

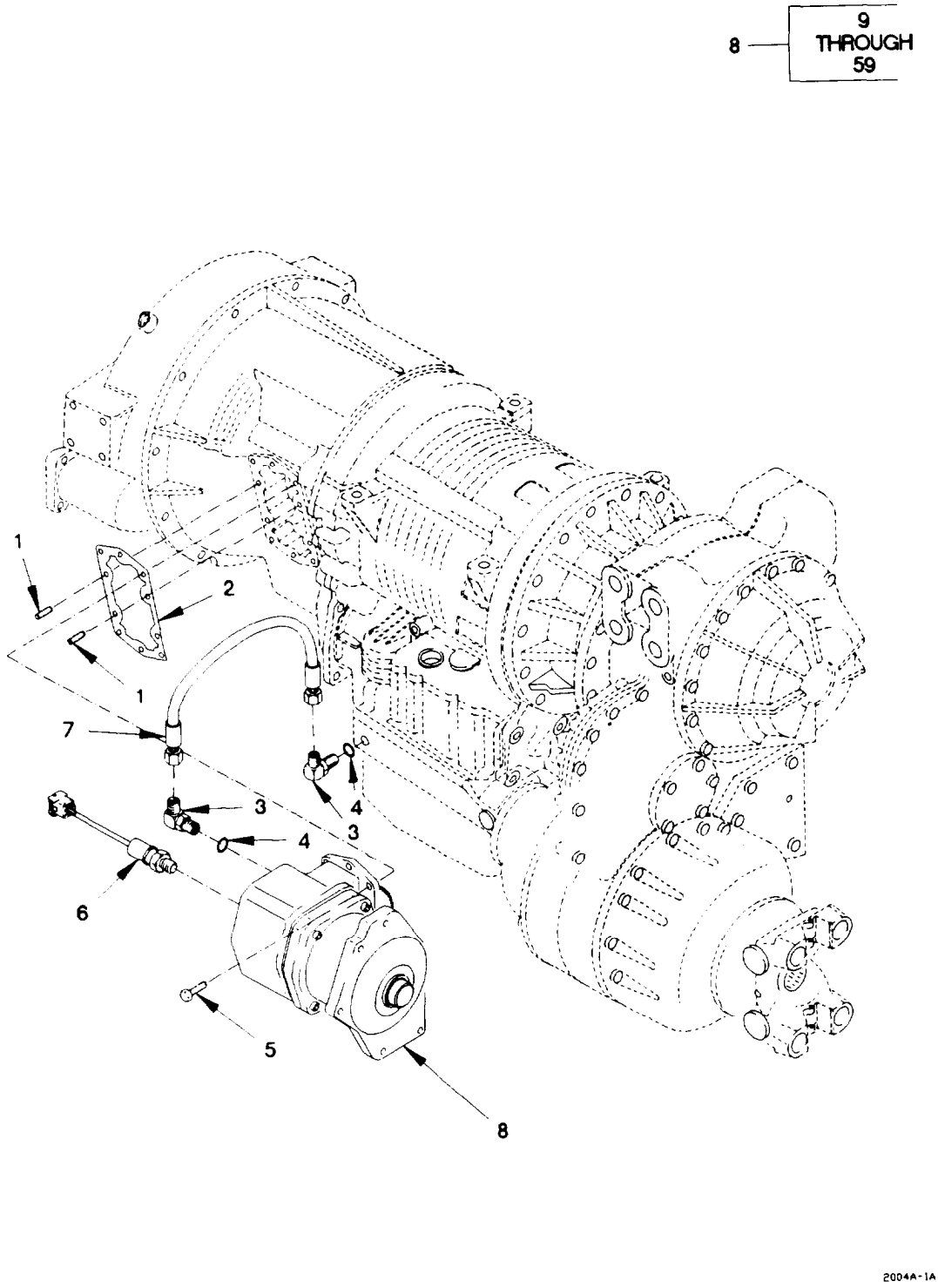

Figure 239. Power Take-Off Assembly (Sheet 1 of 3)

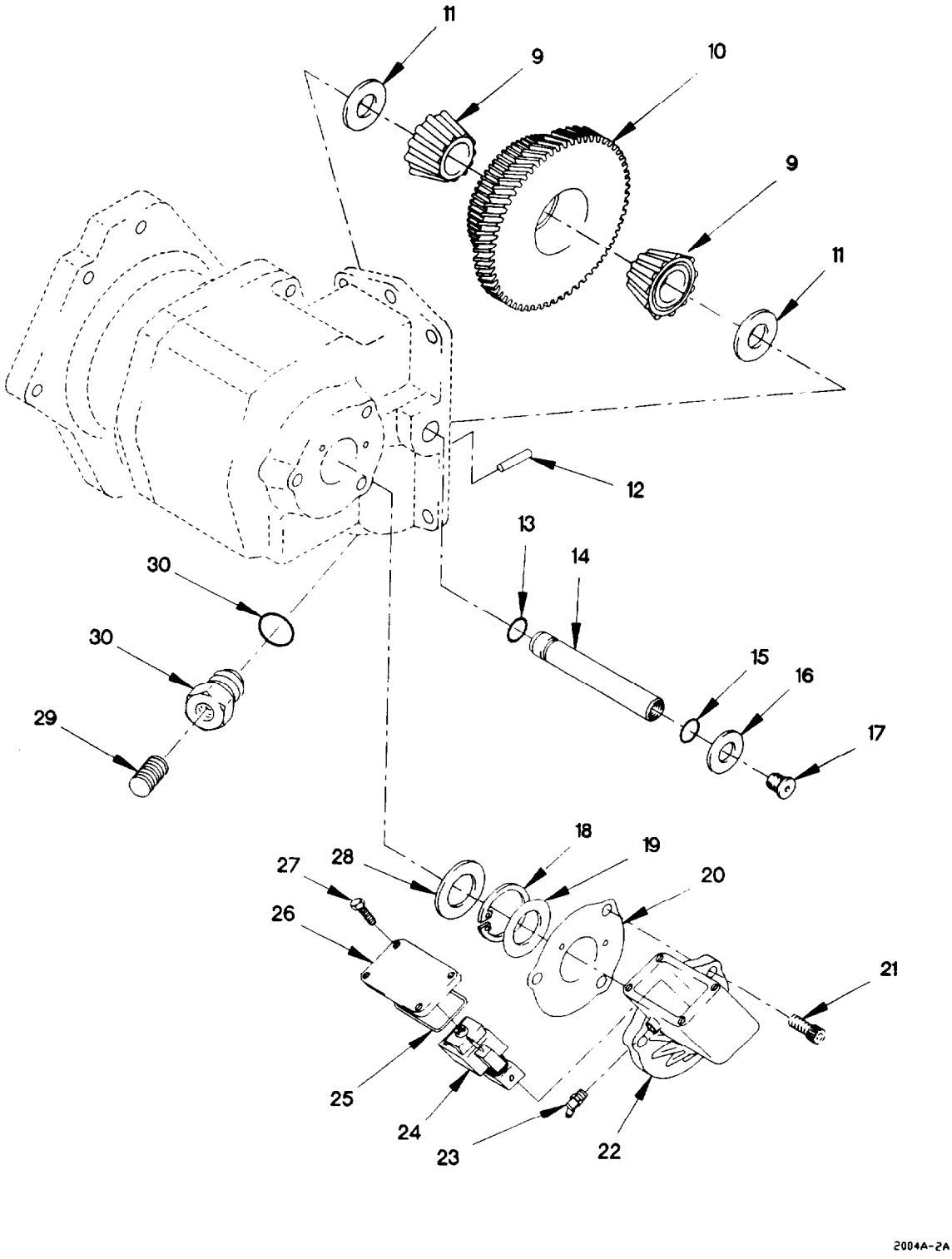

Figure 239. Power Take-Off Assembly (Sheet 2 of 3)

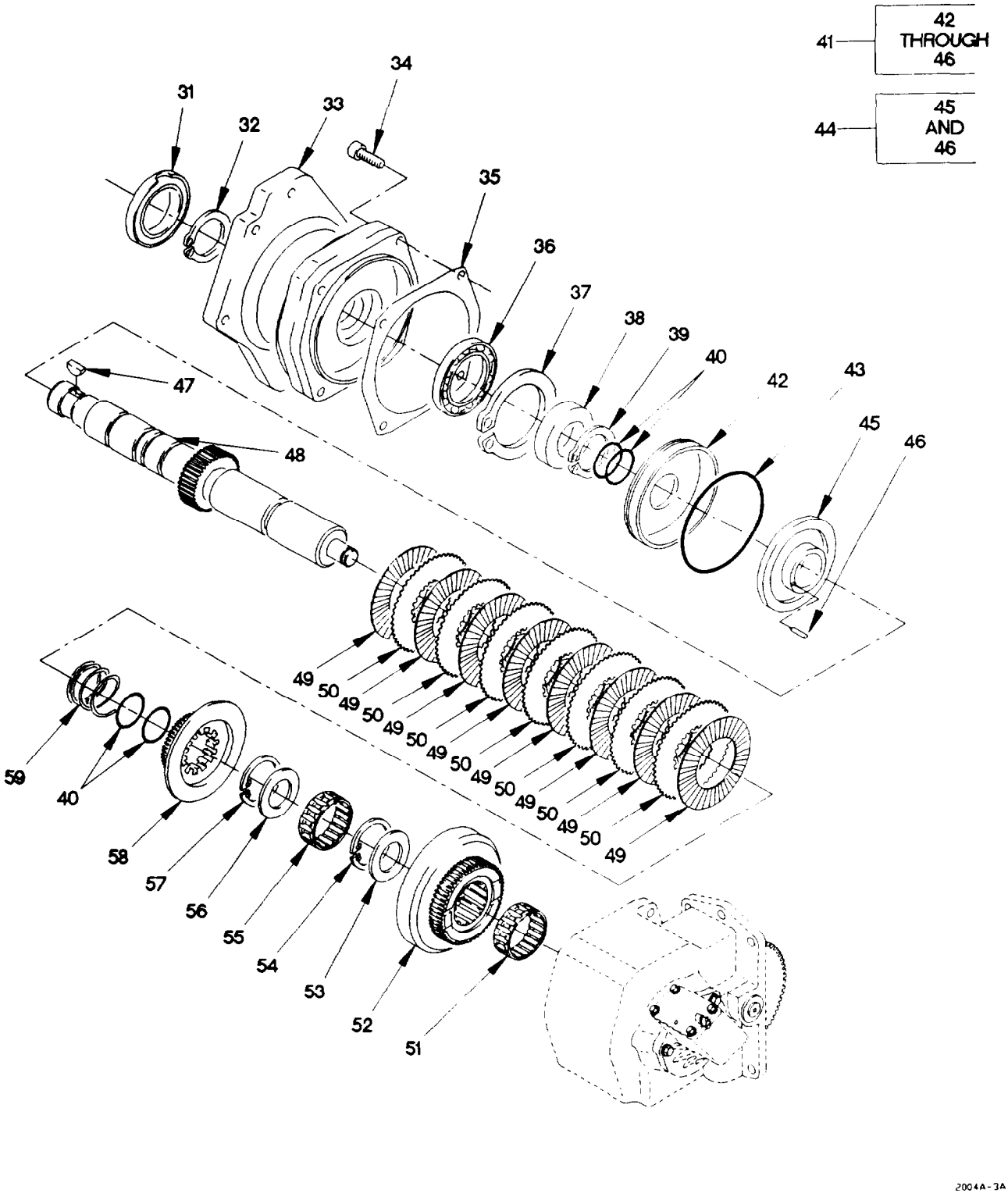

Figure 239. Power Take-Off Assembly (Sheet 3 of 3)

(1) ITEM NO	(2) SMR CODE	(3) FSCM	(4) PART NUMBER	(5) DESCRIPTION AND USABLE ON CODE (UOC)		(6) QTY
				GROUP 2004: POWER TAKE-OFF ASSEMBLY		
				FIG. 239 POWER TAKE-OFF ASSEMBLY		
1	PAOZZ	8N900	379451	SCREW, SHOULDER		2
				UOC: LWB, LWC, LWD,		
2	PAOZZ	8N900	35P-74	GASKET		1
				UOC: LWB, LWC, LWD,		
3	PAOZZ	8N900	379486	ELBOW, TUBE TO BOSS		2
				UOC: LWB, LWC, LWD,		
4	PAFZZ	96906	MS28778-6	O-RING		2
				UOC: LWB, LWC, LWD,		
5	PAOZZ	8N900	379453-10	SCREW, CAP, HEXAGON H		8
				UOC: LWB, LWC, LWD,		
6	PAOZZ	8N900	379502	SWITCH, PRESSURE		1
				UOC: LWB, LWC, LWD,		
7	PAOZZ	8N900	329075-1X	HOSE ASSY, NM		1
				UOC: LWB, LWC, LWD,		
8	PAFFH	11757	276XMFJX-D5XK	POWER TAKEOFF, TRANS		1
				UOC: LWB, LWC, LWD,		
9	PAFZZ	58275	1690071	.CONE AND ROLLERS, TA		2
				UOC: LWB, LWC, LWD,		
10	PAFZZ	11757	5-P-915	.GEAR CLUSTER		1
				UOC: LWB, LWC, LWD,		
11	PAFZZ	11757	14P15	.WASHER ASSORTMENT	V	
				UOC: LWB, LWC, LWD,		
12	PAFZZ	11757	500597-16	.PIN, GROOVED, HEADLES		1
				UOC: LWB, LWC, LWD,		
13	PAFZZ	11757	28-P-191	O-RING		1
				UOC: LWB, LWC, LWD,		
14	PAFZZ	11757	9-P-69	.SHAFT, STRAIGHT		1
				UOC: LWB, LWC, LWD,		
15	PAFZZ	11757	28-P-190	.PACKING, PREFORMED		1
				UOC: LWB, LWC, LWD,		
16	PAFZZ	11757	379505	.RETAINER, PACKING		1
				UOC: LWB, LWC, LWD,		
17	PAFZZ	11757	379484	.PLUG, MACHINE THREAD		1
				UOC: LWB, LWC, LWD,		
18	PAFZZ	11757	378849	.RING, RETAINING		1
				UOC: LWB, LWC, LWD,		
19	PAFZZ	11757	378811	.WASHER, FLAT 7/8		1
				UOC: LWB, LWC, LWD,		
20	PAFZZ	11757	22-P-92	.GASKET		1
				UOC: LWB, LWC, LWD,		
21	PAFZZ	45152	2CX333	.SCREW, CAP, HEXAGON H		3
				UOC: LWB, LWC, LWD,		
22	PAFZZ	11757	34-P-114	.COVER, TRANSMISSION		1
				UOC: LWB, LWC, LWD,		

(1) ITEM NO	(2) SMR CODE	(3) FSCM	(4) PART NUMBER	(5) DESCRIPTION AND USABLE ON CODE (UOC)	(6) QTY
23	PAFZZ	11757	379487	.ELBOW, TUBE TO BOSS UOC: LWB, LWC, LWD,	1
24	PAFZZ	11757	379377-2	.VALVE, SOLENOID UOC: LWB, LWC, LWD,	1
25	PAFZZ	96879	28-P-193	.SEAL, PLAIN ENCASED UOC: LWB, LWC, LWD,	1
26	PAFZZ	11757	329073-1X	.COVER, TRANSMISSION UOC: LWB, LWC, LWD,	1
27	PAFZZ	11757	378429-8	.BOLT, SELF-LOCKING 1/4-20 X 3/4 UOC: LWB, LWC, LWD,	4
28	PAFZZ	11757	28-P-119	.SEAL, PLAIN ENCASED UOC: LWB, LWC, LWD,	1
29	PAFZZ	11757	379231	.PLUG, PIPE UOC: LWB, LWC, LWD,	1
30	PAFZZ	11757	379242	.PLUG, MACHINE THREAD UOC: LWB, LWC, LWD,	1
31	PAFZZ	96879	28-P-192	.SEAL, PLAIN ENCASED UOC: LWB, LWC, LWD,	1
32	PAFZZ	96906	MS3217-1137	.RING, RETAINING UOC: LWB, LWC, LWD,	1
33	PAFZZ	11757	21-P-482	.HOUSING, MECHANICAL UOC: LWB, LWC, LWD,	1
34	PAFZZ	95019	378447-8	.SCREW, SELF-LOCKING 5/16-18 X 1 17/32 UOC: LWB, LWC, LWD,	4
35	PAFZZ	11757	22-P-53	.GASKET UOC: LWB, LWC, LWD,	1
36	PAFZZ	11757	550010	.BEARING, BALL, ANNULA UOC: LWB, LWC, LWD,	1
37	PAFZZ	11757	378895	.RING, RETAINING UOC: LWB, LWC, LWD,	1
38	PAFZZ	11757	4-P-147	.SPACER, RING UOC: LWB, LWC, LWD,	1
39	PAFZZ	96906	MS3217-1137	.RING, RETAINING UOC: LWB, LWC, LWD,	1
40	PAFZZ	11757	28-P-120	.O-RING UOC: LWB, LWC, LWD,	4
41	PAFFF	11757	328895X	.PISTON ASSEMBLY, BAC UOC: LWB, LWC, LWD,	1
42	PAFZZ	11757	378760	. .CYLINDER, CLUTCH UOC: LWB, LWC, LWD,	1
43	PAFZZ	11757	28-P-121	. .PACKING, PREFORMED UOC: LWB, LWC, LWD,	1
44	PAFFF	11757	328676X	. .PISTON AND BALL, CLU UOC: LWB, LWC, LWD,	1
45	PAFZZ	11757	379133	. . .CLUTCH, PISTON UOC: LWB, LWC, LWD,	1

(1) ITEM NO	(2) SMR CODE	(3) FSCM	(4) PART NUMBER	(5) DESCRIPTION AND USABLE ON CODE (UOC)	(6) QTY
46	PAFZZ	11757	378856	. . .WIRE, NONELECTRICAL UOC: LWB, LWC, LWD,	1
47	PAFZZ	11757	500007-29	.KEY, WOODRUFF UOC: LWB, LWC, LWD,	1
48	PAFZZ	11757	3-P-832	.SHAFT, SHOULDERED UOC: LWB, LWC, LWD,	1
49	PAFZZ	11757	379485	.DISK, CLUTCH UOC: LWB, LWC, LWD,	8
50	PAFZZ	11757	378684	.GEAR, SPUR UOC: LWB, LWC, LWD,	7
51	PAFZZ	11757	560972	.BEARING, NEEDLE UOC: LWB, LWC, LWD,	1
52	PAFZZ	11757	2-P-682	.GEAR, SPUR UOC: LWB, LWC, LWD,	1
53	PAFZZ	11757	31-P-70	.BEARING, WASHER, THRU UOC: LWB, LWC, LWD,	1
54	PAFZZ	11757	378608	.RING, RETAINING UOC: LWB, LWC, LWD,	1
55	PAFZZ	11757	560972	.BEARING, NEEDLE UOC: LWB, LWC, LWD,	1
56	PAFZZ	11757	14-P-49	.SPACER, RING UOC: LWB, LWC, LWD,	1
57	PAFZZ	11757	378608	.RING, RETAINING UOC: LWB, LWC, LWD,	1
58	PAFZZ	11757	2-P-458	.GEAR, SPUR UOC: LWB, LWC, LWD,	1
59	PAFZZ	11757	37-P-39	.SPRING, HELICAL, COMP UOC: LWB, LWC, LWD,	1

END OF FIGURE

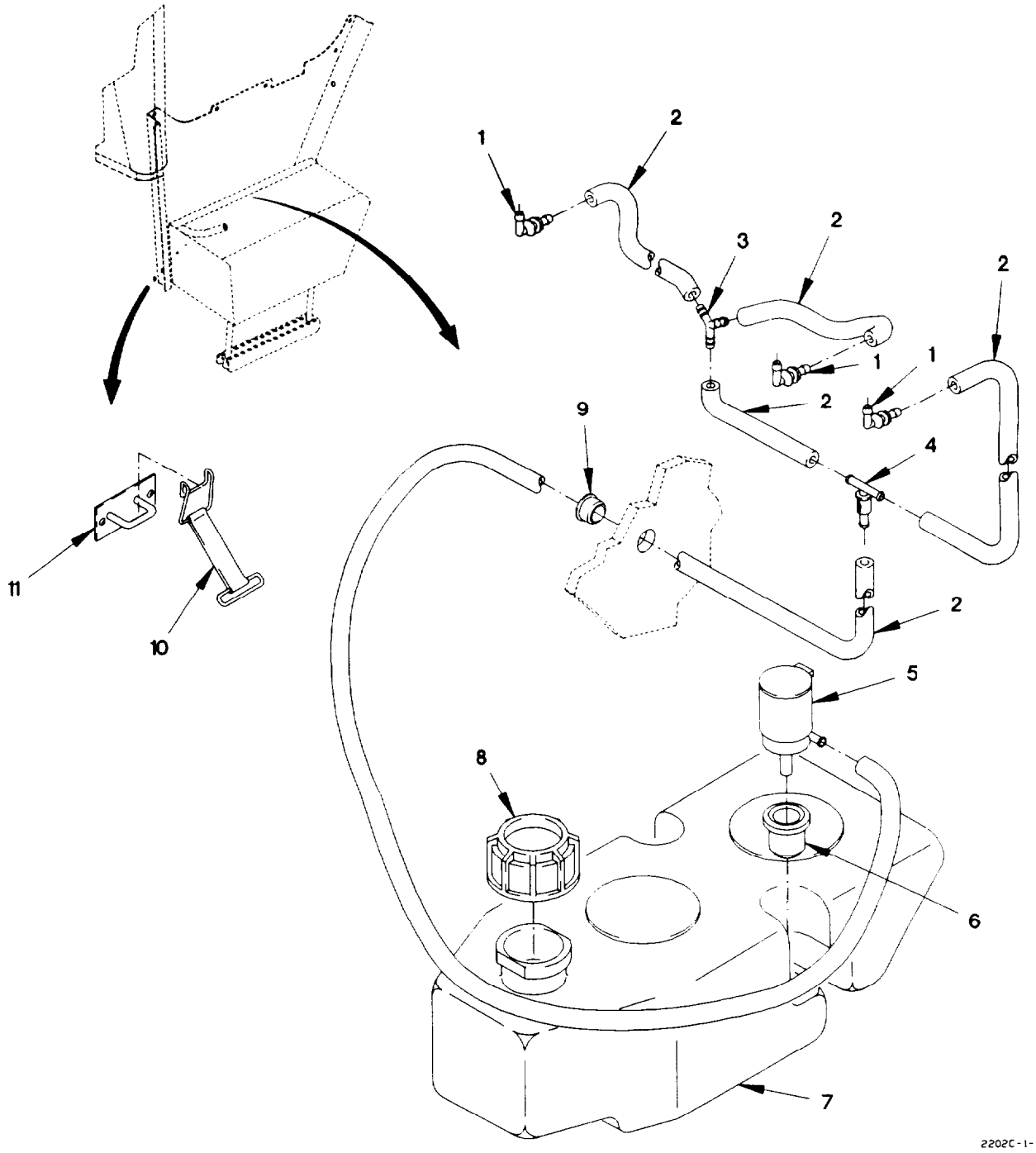

Figure 240. Windshield Washer Reservoir

(1) ITEM NO	(2) SMR CODE	(3) FSCM	(4) PART NUMBER	(5) DESCRIPTION AND USABLE ON CODE (UOC)		(6) QTY
				GROUP 2202: ACCESSORY ITEMS		
				FIG. 240 WINDSHIELD WASHER RESERVOIR		
1	PAOZZ	82484	192.518	ELBOW, HOSE		3
2	PAOZZ	82484	W-22-105	TUBING, NONMETALLIC	V	
3	PAOZZ	0FW39	12417565	WYE, TRUE, PIPE		1
				UOC: LAA, LAB, LAD, LWB, LWD,		
4	PAOZZ	82484	104.385	VALVE, CHECK		1
5	PAOZZ	0FW39	12417785	PUMP, WINDSHIELD WAS		1
6	PAOZZ	19207	12417598	GROMMET, NONMETALLIC		1
7	PAOZZ	0FW39	12417490	RESERVOIR, WINDSHIE		1
8	PAOZZ	4Y355	115200860015	CAP, FILLER OPENING		1
9	PAOZZ	96906	MS35489-6	GROMMET, NONMETALLIC		1
10	PAOZZ	0FW39	12417525	STRAP, ELASTIC		1
11	PAOZZ	0FW39	12419113	BRACKET, MOUNTING		1
				END OF FIGURE		

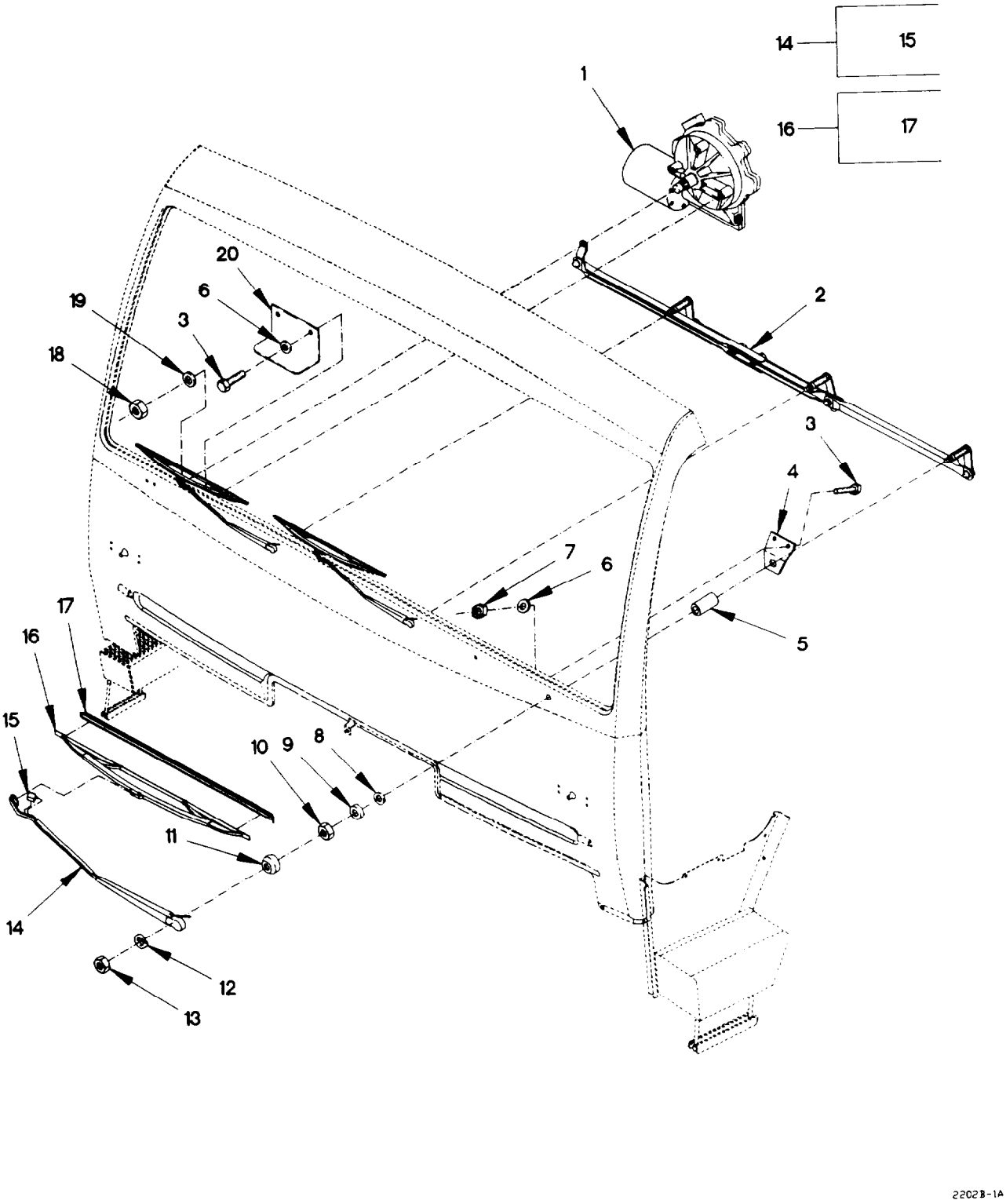

Figure 241. Windshield Wiper and Motor

(1) ITEM NO	(2) SMR CODE	(3) FSCM	(4) PART NUMBER	(5) DESCRIPTION AND USABLE ON CODE (UOC)	(6) QTY
				GROUP 2202: ACCESSORY ITEMS	
				FIG. 241 WINDSHIELD WIPER AND MOTOR	
1	PAOZZ	82424	E-006-086	MOTOR, WINDSHIELD WI	1
2	PAOZZ	82484	GS-3909	ARM, WINDSHIELD WIPE	1
3	PAOZZ	15526	DIN933-M6X16-8.8 -A4C	SCREW, CAP, HEXAGON H M6 X 1 X 16	9
4	PAOZZ	0FW39	12417747	BRACKET, VEHICULAR C	3
5	PAOZZ	0FW39	12417488	SPACER, SLEEVE	3
6	PAOZZ	19200	12524631-1	WASHER, FLAT M6	9
6	PAOZZ	19200	12524631-1	WASHER, FLAT M6	3
				UOC: LAC, LWC,	
7	PAOZZ	15526	DIN 934 ST M6	NUT, SELF-LOCKING, HE M6 X 1	6
8	PAOZZ	82484	900.032	GASKET	3
9	PAOZZ	82484	910.075	WASHER, FLAT M16.5	3
10	PAOZZ	82484	908.718	NUT, PLAIN, HEXAGON M16 X 1	3
11	PAOZZ	82484	C-2147	COLLAR, SHAFT	3
12	PAOZZ	19207	12414560-018	WASHER, LOCK M8	3
12	PAOZZ	19207	12414560-018	WASHER, LOCK M8	2
13	PAOZZ	82484	907.108	NUT, PLAIN, HEXAGON M8 X 1.25	3
13	PAOZZ	82484	907.108	NUT, PLAIN, HEXAGON M8 X 1.25	2
				UOC: LAC, LWC,	
14	PAOOO	82484	S-4706	ARM, WINDSHIELD WIPE	3
				UOC: LAA, LAB, LAD, LWB, LWD,	
14	PAOOO	82484	12417860	ARM, WINDSHIELD WIPE	2
				UOC: LAC, LWC,	
15	PAOZZ	82484	106.731	.NOZZLE, WINDSHIELD W	1
16	PAOZZ	82484	C-2145	BLADE, WINDSHIELD WI	3
16	PAOZZ	82484	C-2145	BLADE, WINDSHIELD WI	2
				UOC: LAC, LWC,	
17	PAOZZ	0FW39	TV980007	.WIPER, REFILL	1
18	PAOZZ	19207	12419003	NUT, PLAIN, EXTENDED	1
19	PAOZZ	34914	990 3861	WASHER, FLAT M8.4	1
20	PAOZZ	19207	12420333	BRACKET, ANGLE	1
				END OF FIGURE	

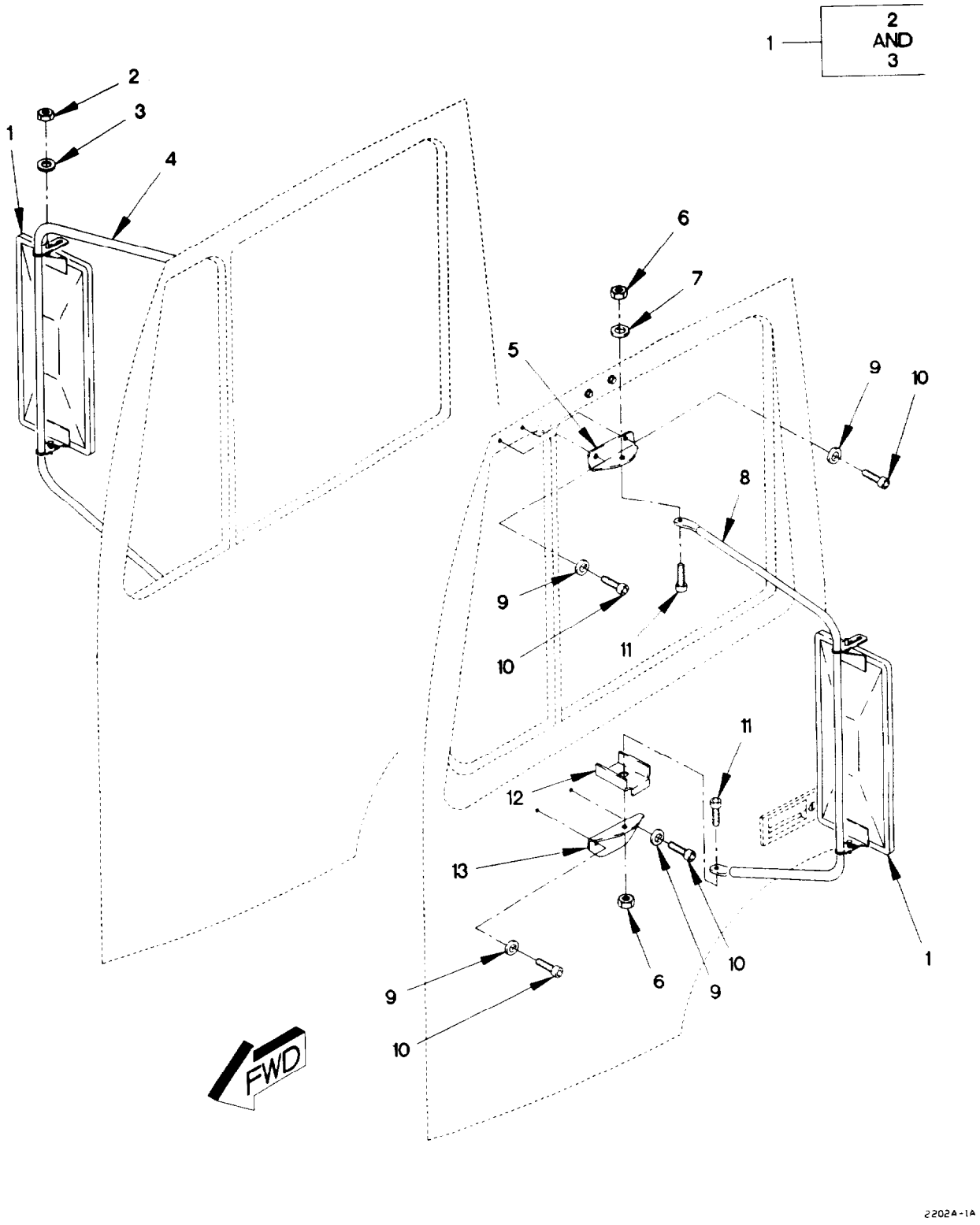

Figure 242. Cab Mirrors

(1) ITEM NO	(2) SMR CODE	(3) FSCM	(4) PART NUMBER	(5) DESCRIPTION AND USABLE ON CODE (UOC)	(6) QTY
				GROUP 2202: ACCESSORY ITEMS	
				FIG. 242 CAB MIRRORS	
1	PAOZZ	58536	A52432-3-R	MIRROR ASSEMBLY, REA RIGHT	1
1	PAOZZ	58536	A52432-3-L	MIRROR ASSEMBLY, REA LEFT	1
2	PAOZZ	96906	MS21044-N4	.NUT, SELF-LOCKING, HE 1/4-38	4
3	PAOZZ	96906	MS27183-10	.WASHER, FLAT 9/32	4
4	PAOZZ	0FW39	12419942-011	BRACKET, MOUNTING	1
				UOC: LAA, LAB, LAD, LWB, LWD,	
4	PAOZZ	0FW39	12420113-008	BRACKET, VEHICULAR C	1
				UOC: LAC, LWC,	
5	PAOZZ	0FW39	12419943-001	BRACKET, ANGLE	2
6	PAOZZ	19207	12414315-006	NUT, SELF-LOCKING, HE M8 X 1.25	4
7	PAOZZ	34914	990 3861	WASHER, FLAT M8.4	4
8	PAOZZ	19207	12419942-010	BRACKET, MOUNTING	1
				UOC: LAA, LAB, LAD, LWB, LWD,	
8	PAOZZ	19207	12420113-007	BRACKET, VEHICULAR C	1
				UOC: LAC, LWC,	
9	PAOZZ	19200	12524631-1	WASHER, FLAT M6	8
10	PAOZZ	19207	12414475-068	SCREW, CAP, SOCKET HE M6 X 1 X 16	8
11	PAOZZ	81495	071 408 32	BOLT, MACHINE M8 X 1.25 X 25	4
12	PAOZZ	19207	12421262	PLATE, MOUNTING	2
13	PAOZZ	19207	12419944-001	BRACKET, ANGLE	2

END OF FIGURE

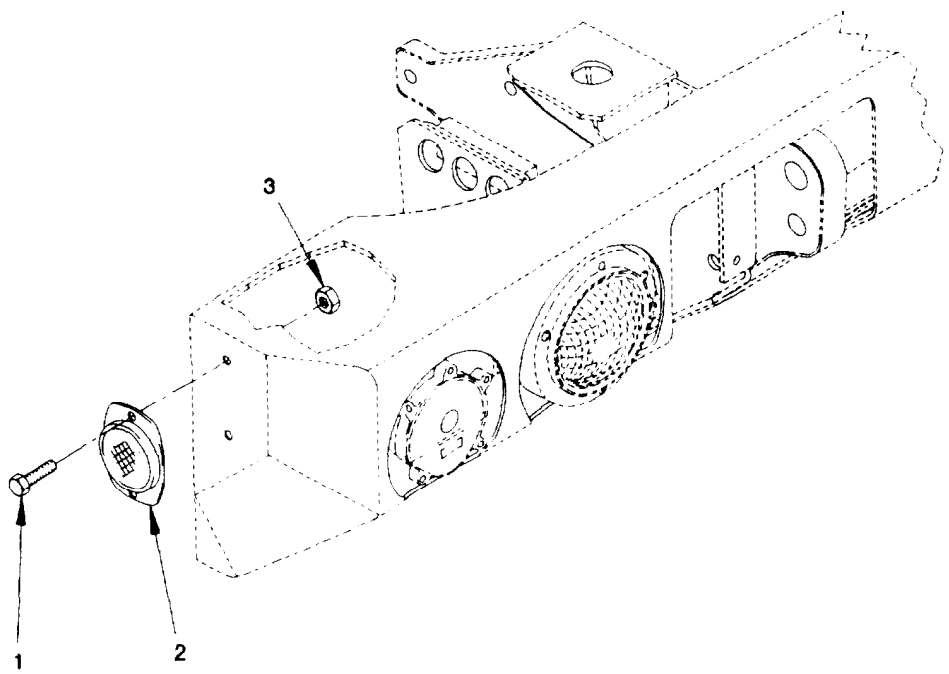

2202H-1A

Figure 243. Front Reflectors

(1) ITEM NO	(2) SMR CODE	(3) FSCM	(4) PART NUMBER	(5) DESCRIPTION AND USABLE ON CODE (UOC)	(6) QTY
				GROUP 2202: ACCESSORY ITEMS	
				FIG. 243 FRONT REFLECTORS	
1	PAOZZ	56161	10504502	SCREW, CAP, HEXAGON H M5 X .8 X 25	4
2	PAOZZ	96906	MS35387-2	REFLECTOR, INDICATIN	2
3	PAOZZ	19207	12414315-003	NUT, PLAIN, HEXAGON M5 X .8	4
				END OF FIGURE	

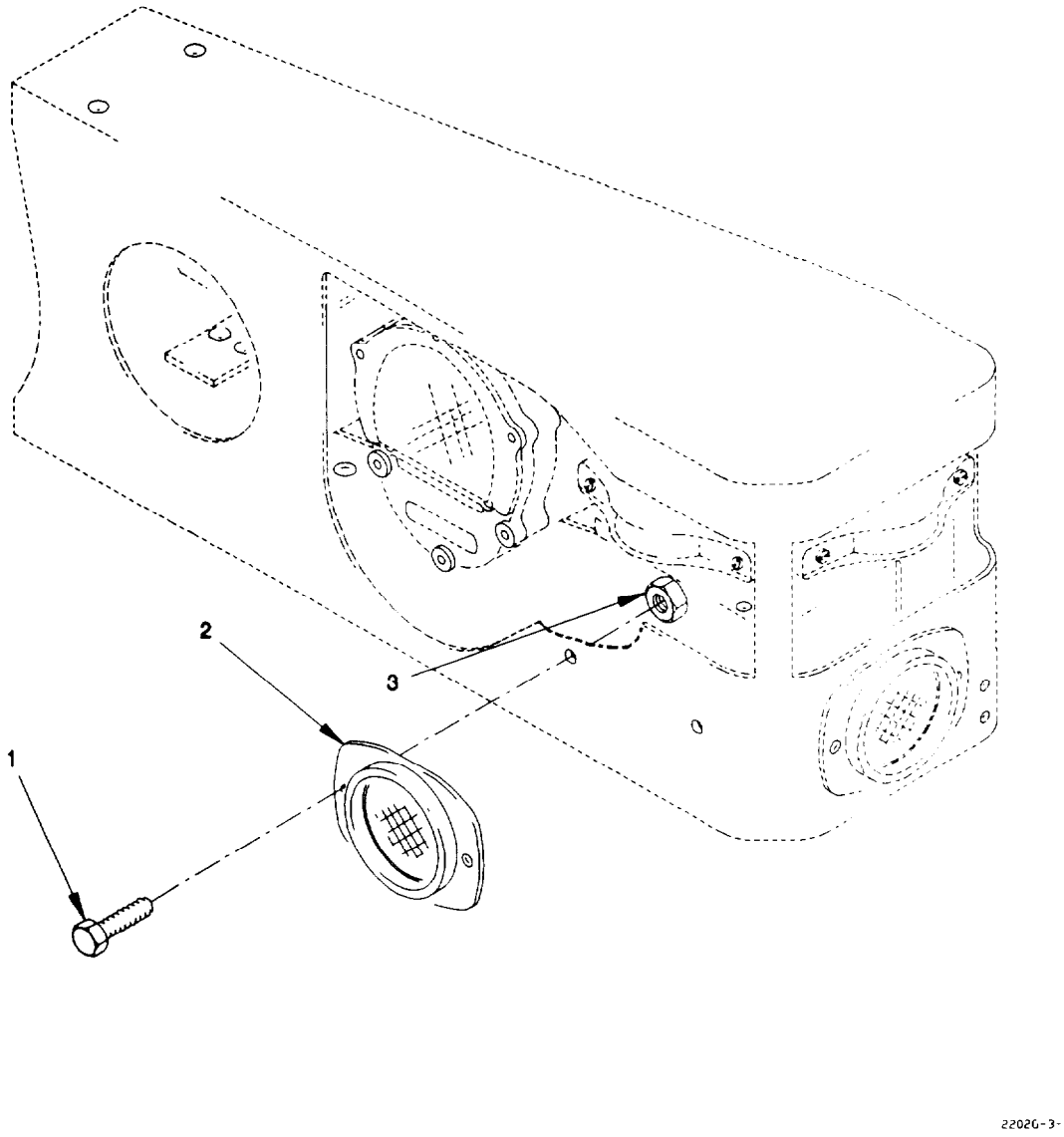

Figure 244. Rear Reflectors

(1) ITEM NO	(2) SMR CODE	(3) FSCM	(4) PART NUMBER	(5) DESCRIPTION AND USABLE ON CODE (UOC)	(6) QTY
				GROUP 2202: ACCESSORY ITEMS	
				FIG. 244 REAR REFLECTORS	
1	PAOZZ	56161	10504502	SCREW, CAP, HEXAGON H M5 X .8 X 25	8
2	PAOZZ	96906	MS35387-1	REFLECTOR, INDICATIN	4
3	PAOZZ	19207	12414315-003	NUT, PLAIN, HEXAGON M5 X .8	8
				END OF FIGURE	

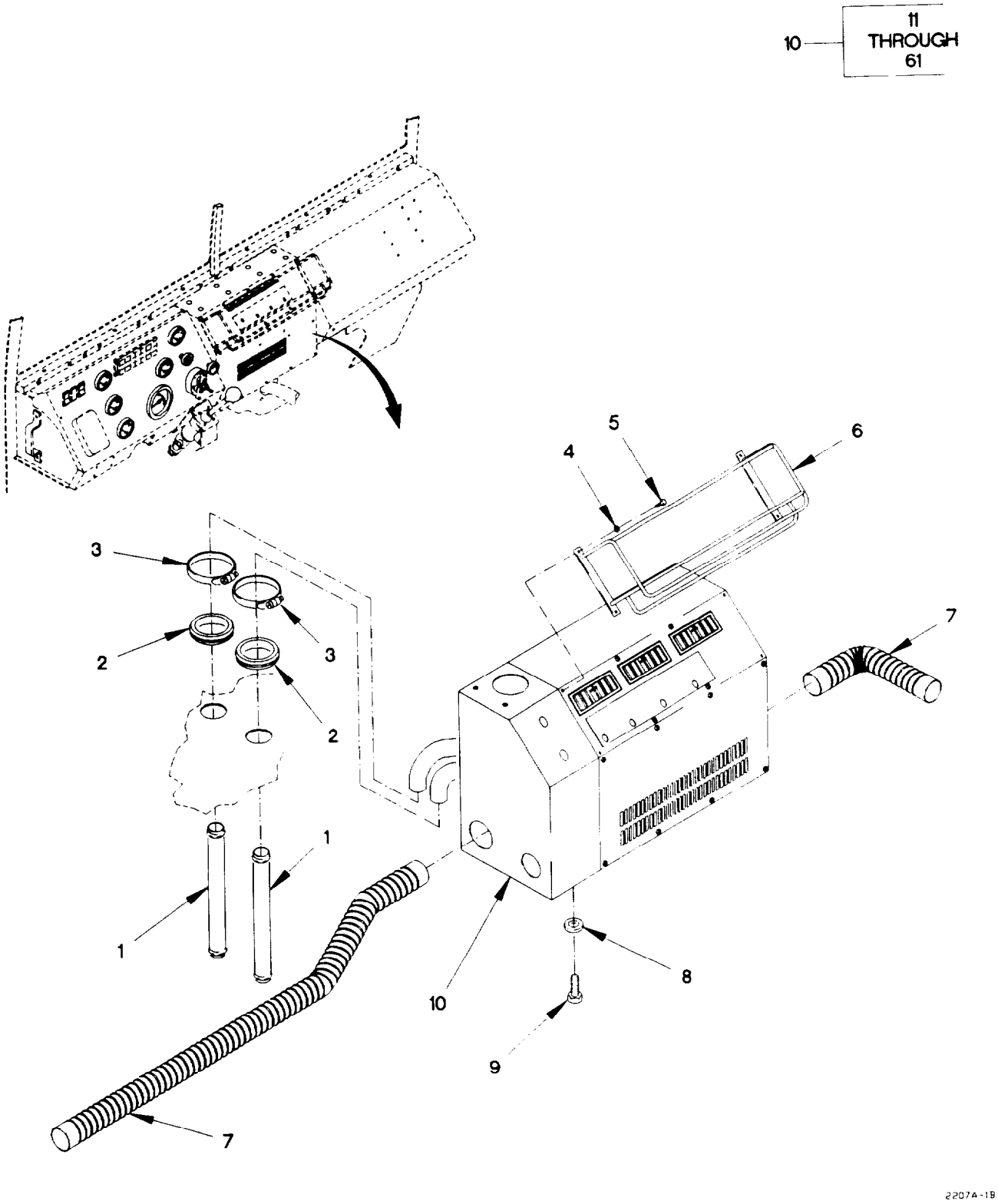

Figure 245. Personnel Heater Assembly (Sheet 1 of 3)

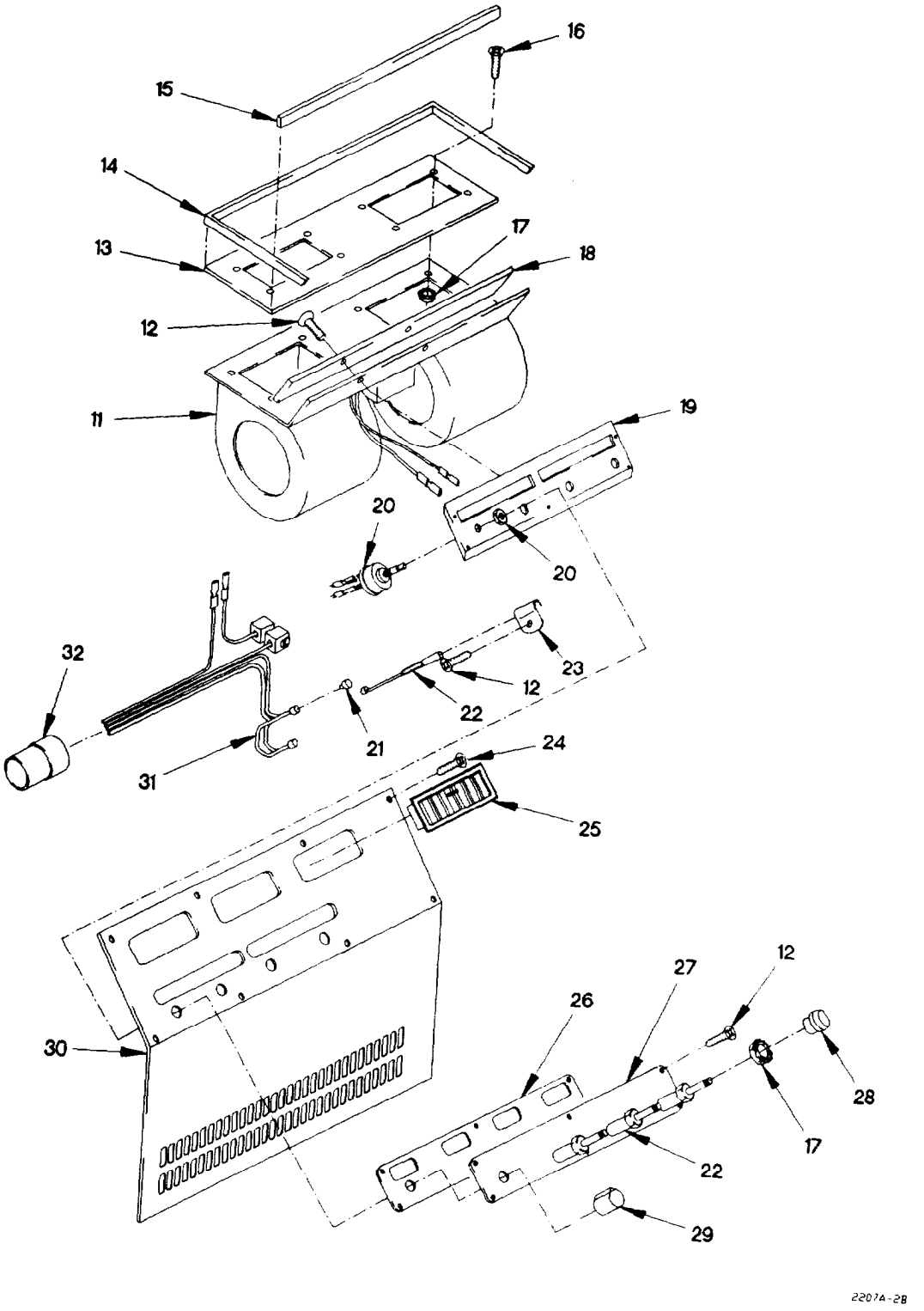

Figure 245. Personnel Heater Assembly (Sheet 2 of 3)

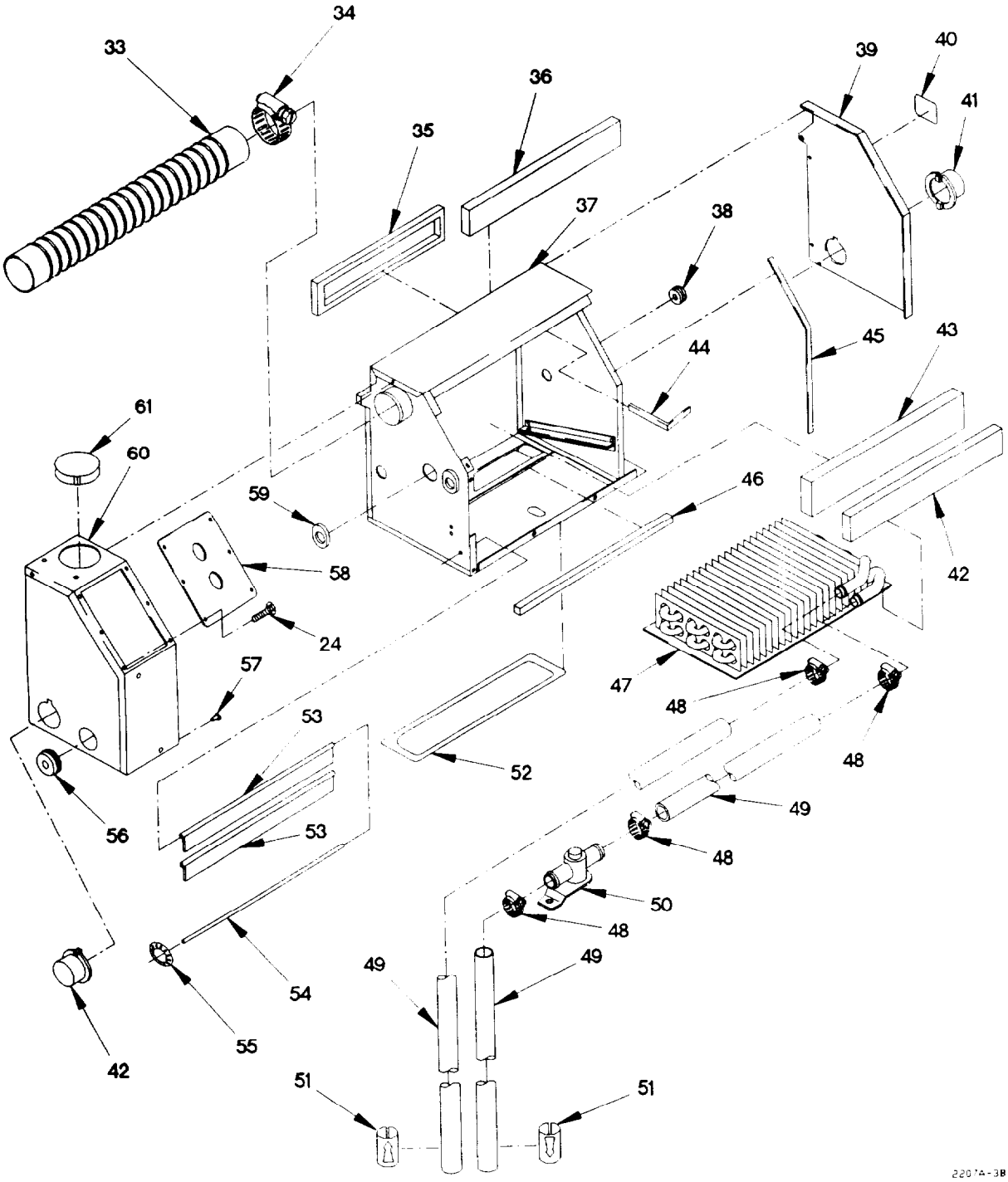

Figure 245. Personnel Heater Assembly (Sheet 3 of 3)

(1) ITEM NO	(2) SMR CODE	(3) FSCM	(4) PART NUMBER	(5) DESCRIPTION AND USABLE ON CODE (UOC)	(6) QTY
				GROUP 2207: WINTERIZATION EQUIPMENT FIG. 245 PERSONNEL HEATER ASSEMBLY	
1	PAOZZ	19207	12418298-002	TUBE, METALLIC	2
2	PAOZZ	96906	MS35489-23X	GROMMET, NONMETALLIC	2
3	PAOZZ	7Z588	9410	CLAMP, HOSE 1 1/16	2
4	PAOZZ	0FW39	12414473-001	WASHER, FLAT	4
5	PAOZZ	15526	DIN933-M6X16-8.8 -A4C	SCREW, CAP, HEXAGON H M6 X 1 X16	4
6	PAOZZ	0FW39	12421721	GUARD, CONTROL HEATE	4
7	MOOZZ	0FW39	12420308X457	HOSE, AIR DUCT MAKE FROM HOSE P/N: 8711054 (19207), CUT TO LENGTH	1
8	PAOZZ	34914	990 3861	WASHER, FLAT M8.4	8
9	PAOZZ	15434	C0718103500	SCREW, CAP, HEXAGON H M8 X 1.25 X 16	8
10	PAOOO	24234	936185	HEATER, VEHICULAR, CO	1
11	PAOZZ	24234	411271	.HOUSING, HEATER COMP	1
12	PAOZZ	24234	201870	.SCREW, MACHINE	10
13	PAOZZ	24234	516640	.BLOWER, ENGINE COOLI	1
14	PAOZZ	24234	352700	.PLASTIC STRIP	1
15	PAOZZ	24234	350700	.GASKET	1
16	PAOZZ	24234	200943	.SCREW, MACHINE	6
17	PAOZZ	19207	7951286	.NUT, PLAIN, ASSEMBLED #10 X 32	9
18	PAOZZ	24234	352500	.SOUND CONTROLLING B	1
19	PAOZZ	24234	516638	.PLATE, MOUNTING	1
20	PAOZZ	24234	222796	.SWITCH, INTERLOCK	1
21	PAOZZ	24234	222644	.LAMP, INCANDESCENT	2
22	PAOZZ	24234	243105	.CABLE ASSEMBLY, CONT	3
23	PAOZZ	24234	290247	.CLAMP, LOOP	2
24	PAOZZ	75755	21M7285	.SCREW, MACHINE 6M X 1.0 X 12	18
25	PAOZZ	24234	360400	.VENTILATOR, AIR CIRC	3
26	PAOZZ	24234	515864	.PLATE, MOUNTING	1
27	PAOZZ	24234	342539	.LABEL	1
28	PAOZZ	24234	380007	.KNOB	3
29	PAOZZ	24234	380087	.KNOB	1
30	PAOZZ	24234	516643	.COVER, ACCESS	1
31	PAOZZ	24234	222677	.WIRING HARNESS	1
32	PAOZZ	71468	120-1809-000	.CONNECTOR BODY, PLUG	1
33	PAOZZ	24234	312000	.HOSE, AIR DUCT	1
34	PAOZZ	24234	290267	.CLAMP, HOSE	2
35	PAOZZ	24234	355175	.GASKET	1
36	PAOZZ	24234	353806	.GASKET	1
37	PAOZZ	24234	516644	.FRAME, HEATER CORE	1
38	PAOZZ	24234	309851	.GROMMET, NONMETALLIC	1
39	PAOZZ	24234	516651	.FRAME, HEATER CORE	1
40	PAOZZ	24234	340958	.PLATE, IDENTIFICATIO	1
41	PAOZZ	24234	515867	.COUPLING, HOSE	2
42	PAOZZ	24234	352200	.GASKET	1

(1) ITEM NO	(2) SMR CODE	(3) FSCM	(4) PART NUMBER	(5) DESCRIPTION AND USABLE ON CODE (UOC)	(6) QTY
43	PAOZZ	24234	353810	.GASKET	1
44	MOOZZ	24234	352302X6	.GASKET MAKE FROM GASKET P/N 352302 (24234) X 6 IN LG	1
45	MOOZZ	24234	352302X14.5	.GASKET MAKE FROM GASKET P/N 352302 (24234) X 14 1/2 IN LG	1
46	PAOZZ	24234	353400	.GASKET	1
47	PAOZZ	24234	280375	.HEATER, VEHICULAR, CO	1
48	PAOZZ	24234	290214	.CLAMP, HOSE	4
49	PAOZZ	24234	320000	.HOSE, NONMETALLIC	3
50	PAOZZ	24234	173048	.VALVE, HEATER CONTRO	1
51	PAOZZ	24234	342550	.LABEL	2
52	PAOZZ	24234	355148	.GASKET	1
53	PAOZZ	24234	355150	.SEAL, NONMETALLIC ST	2
54	PAOZZ	24234	515865	.ROD, STRAIGHT, HEADLE	2
55	PAOZZ	99688	62229	.PUSH ON NUT	9
56	PAOZZ	24234	300620	.GROMMET, NONMETALLIC	1
57	PAOZZ	24234	206057	.RIVET, BLIND UOC: LAA, LAB, LAC, LAD, LWB, LWC, LWD,	12
58	PAOZZ	24234	515866	.COVER, SWITCH TERMIN	1
59	PAOZZ	24234	300597	.GROMMET, METALLIC	2
60	PAOZZ	24234	516653	.FRAME, HEATER CORE	1
61	PAOZZ	24234	360784	.GROMMET, RUBBER	1

END OF FIGURE

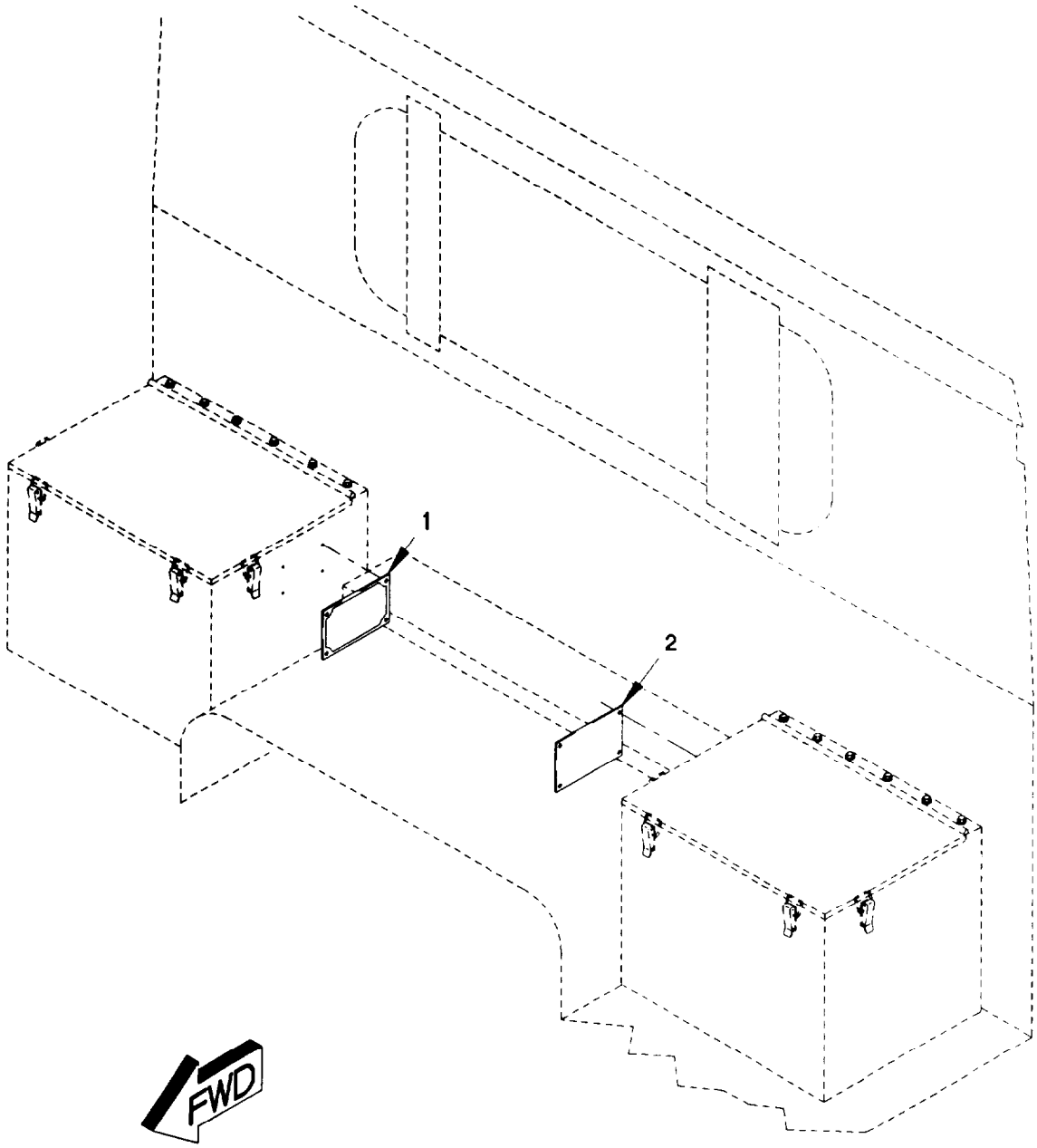

2210E-1A

Figure 246. Data and Identification Plates (Sheet 1 of 8)

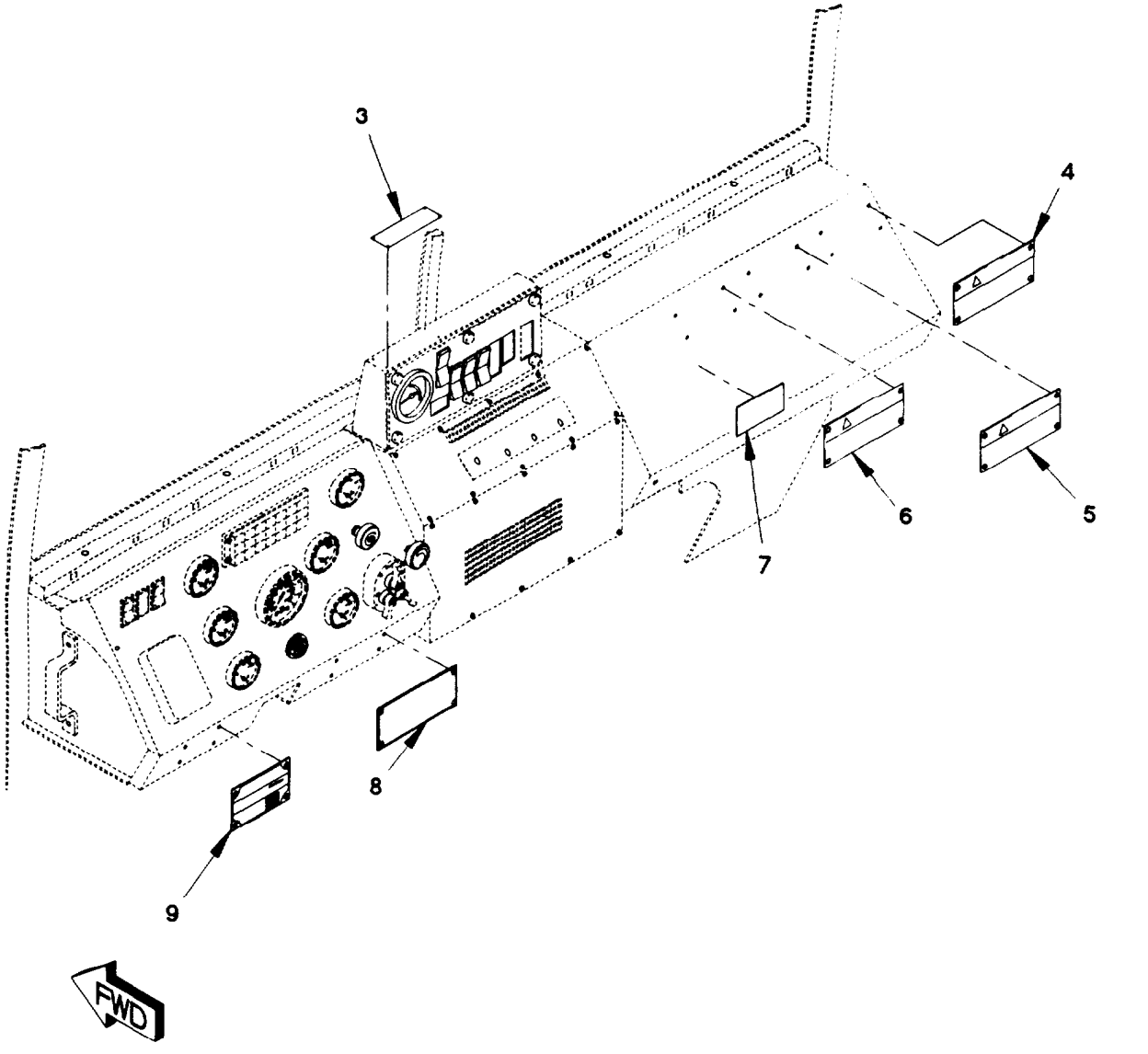

Figure 246. Data and Identification Plates (Sheet 2 of 8)

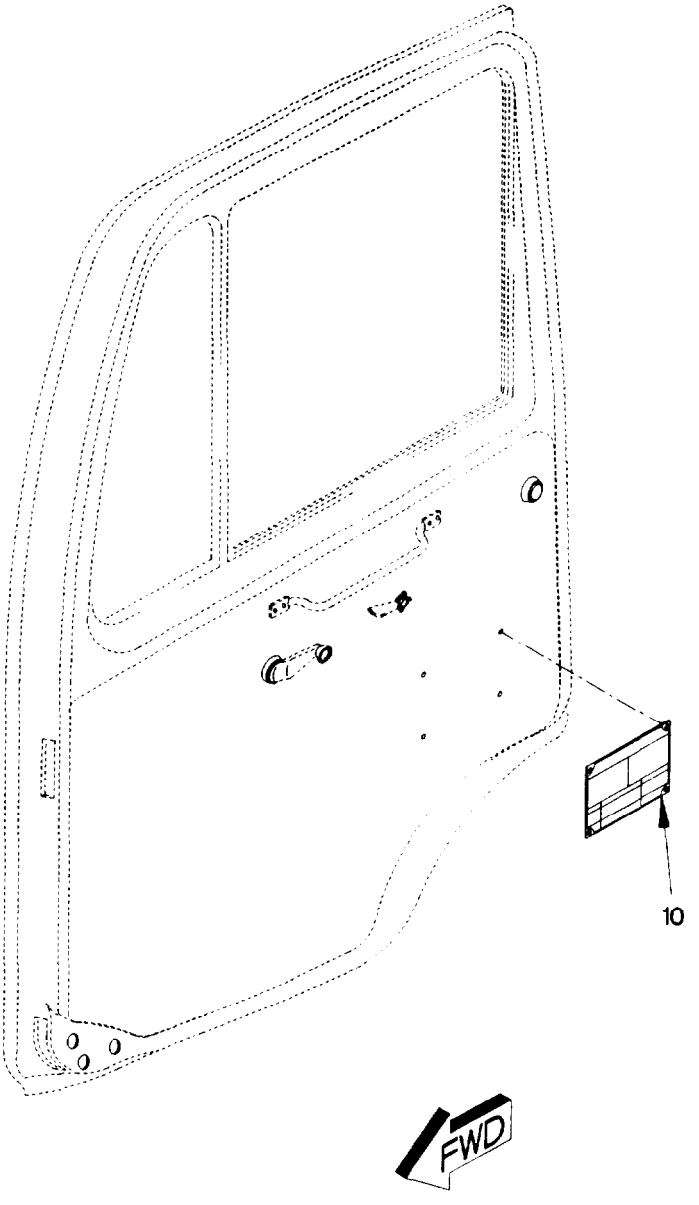

2210E - 3A

Figure 246. Data and Identification Plates (Sheet 3 of 8)

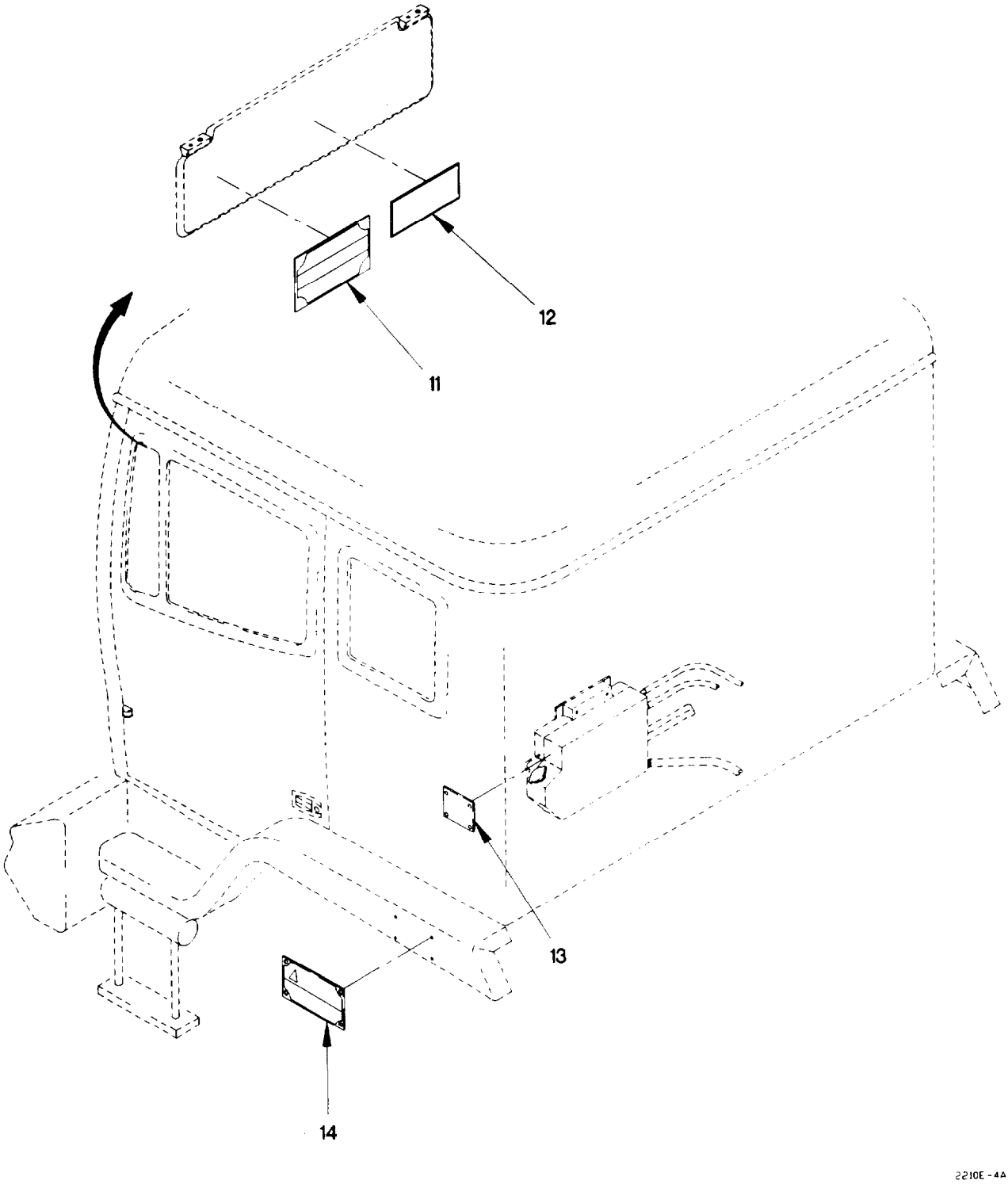

Figure 246. Data and Identification Plates (Sheet 4 of 8)

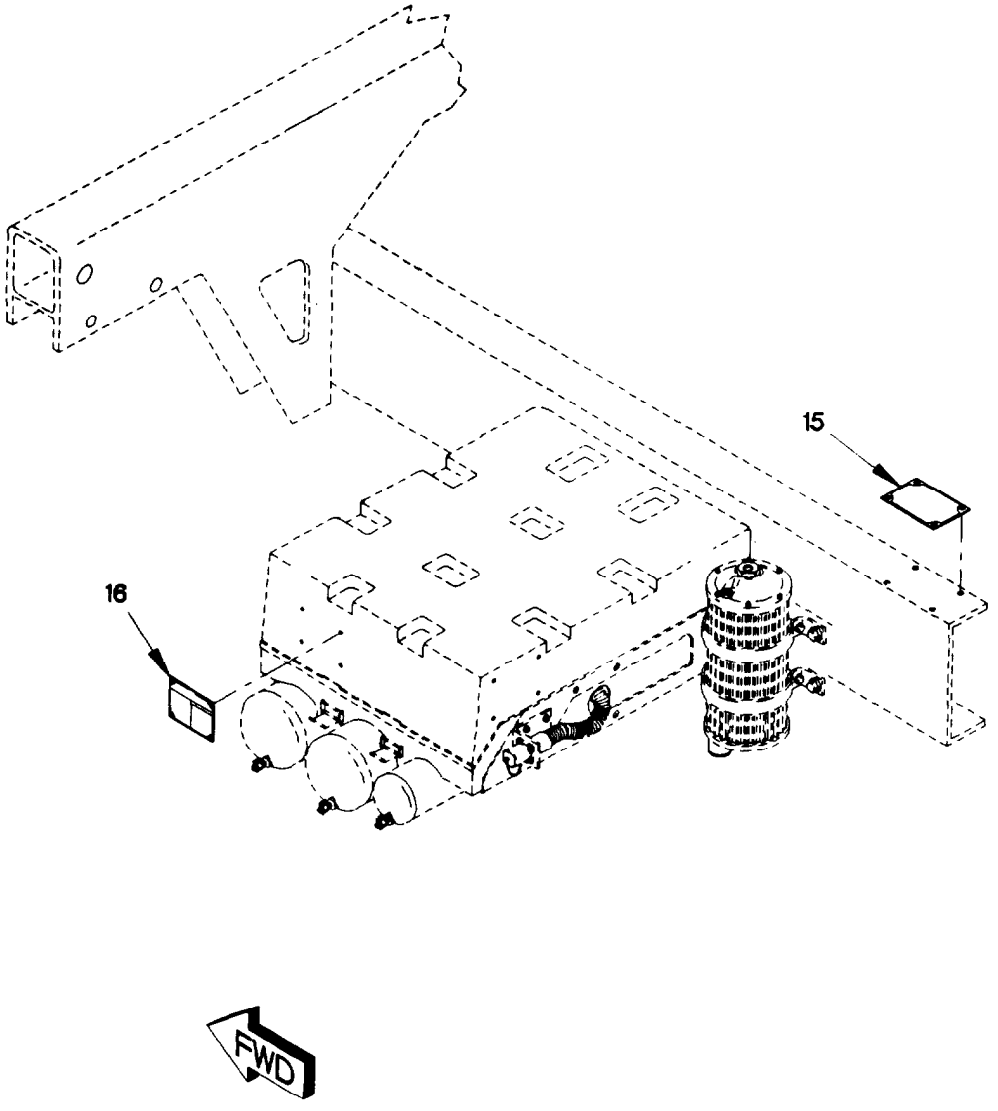

2210E-5A

Figure 246. Data and Identification Plates (Sheet 5 of 8)

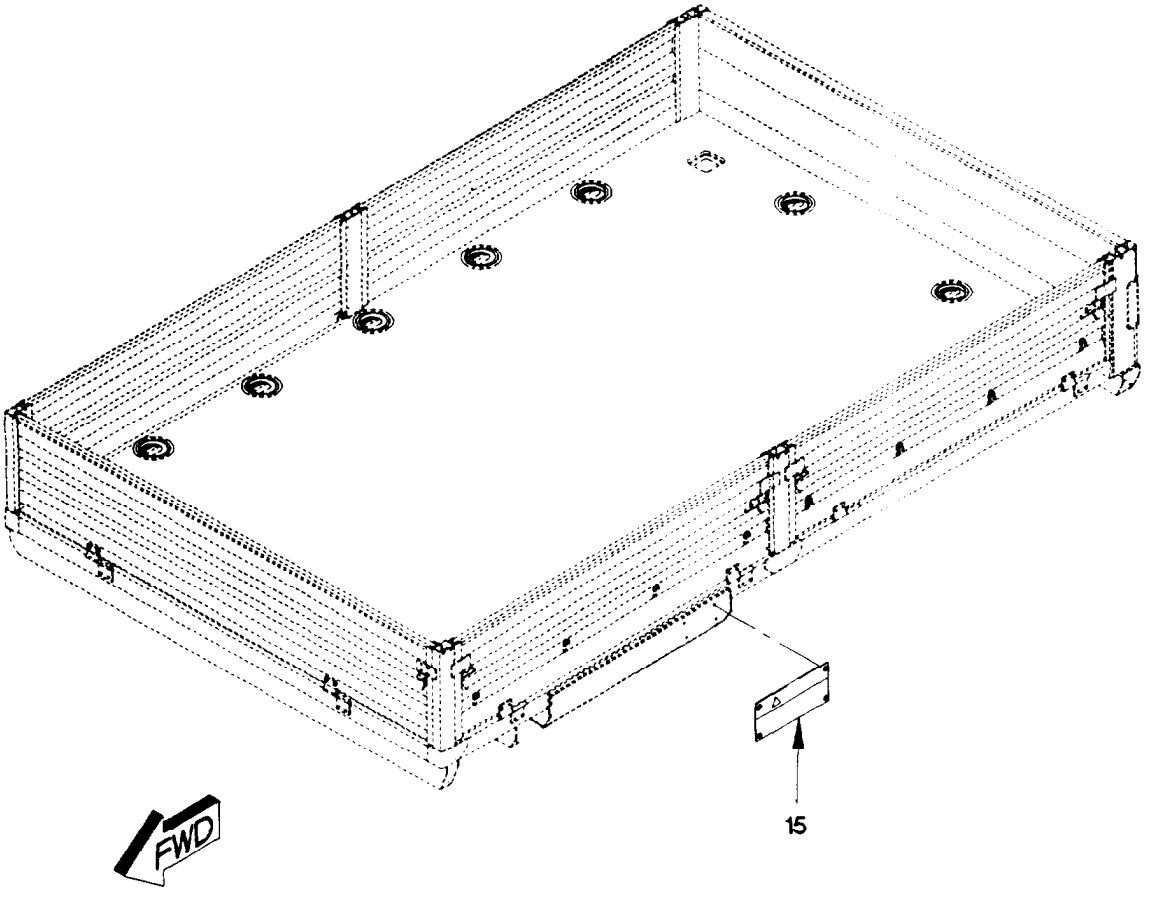

2210E-6A

Figure 246. Data and Identification Plates (Sheet 6 of 8)

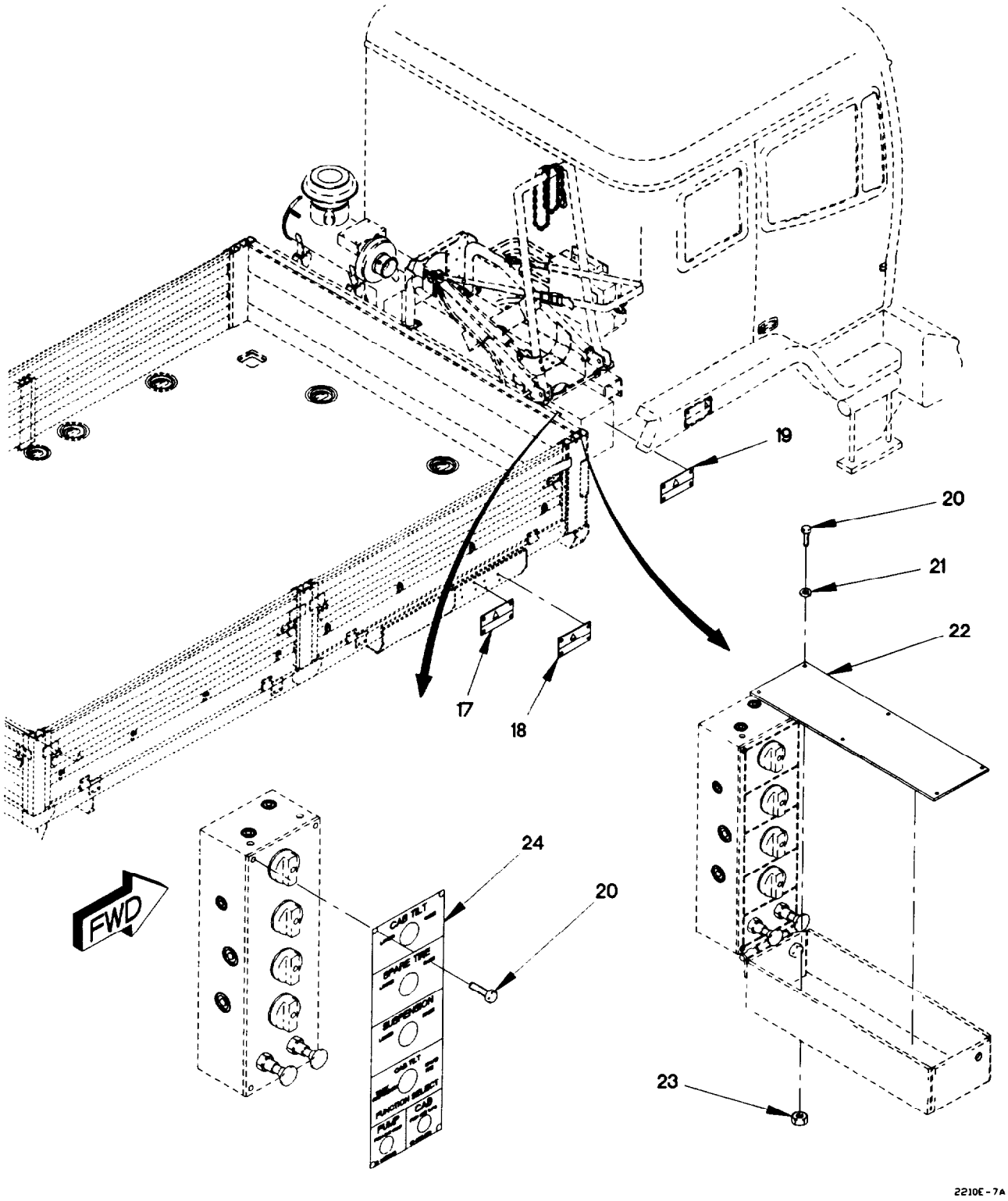

Figure 246. Data and Identification Plates (Sheet 7 of 8)

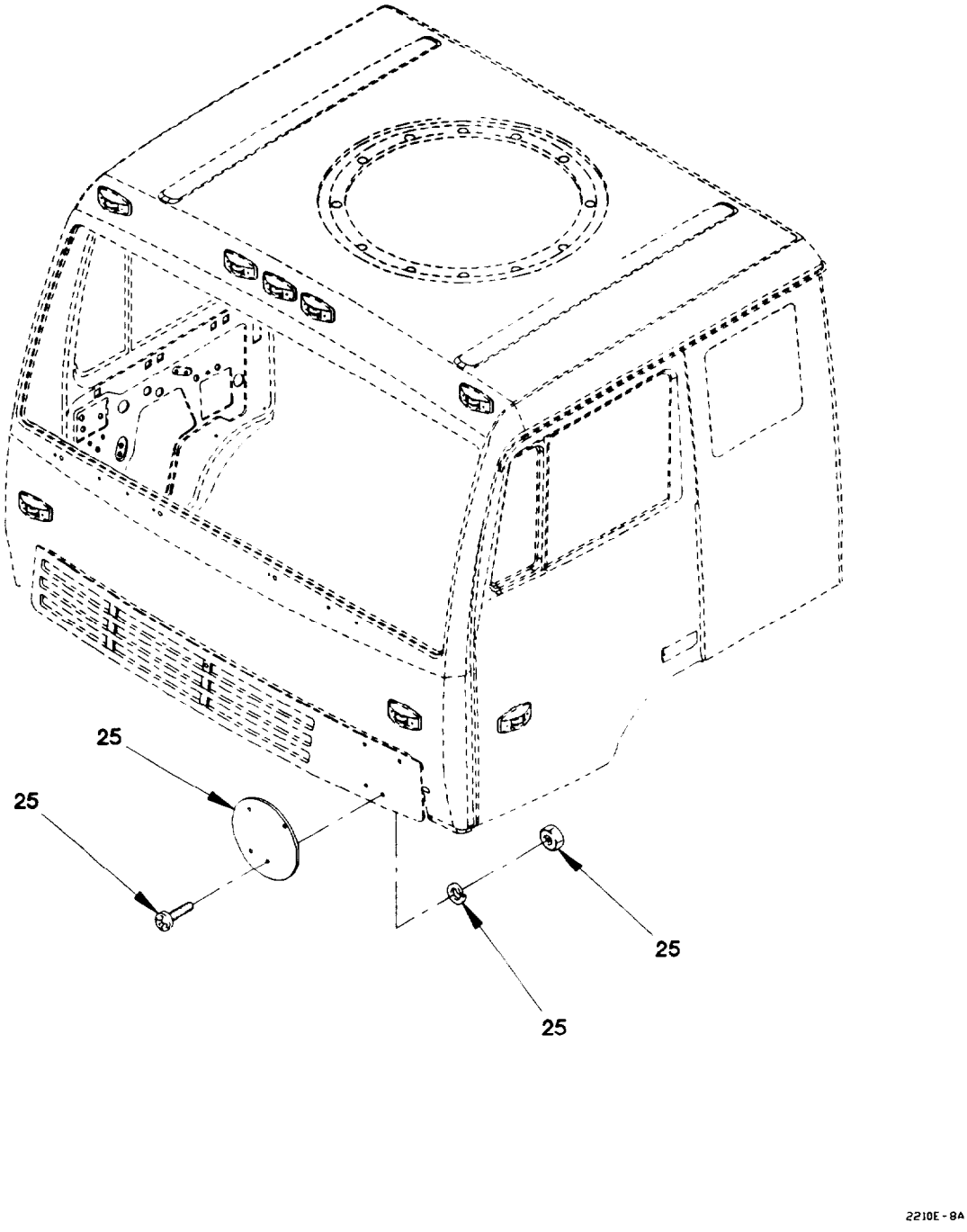

Figure 246. Data and Identification Plates (Sheet 8 of 8)

(1) ITEM NO	(2) SMR CODE	(3) FSCM	(4) PART NUMBER	(5) DESCRIPTION AND USABLE ON CODE (UOC)	(6) QTY
				GROUP 2210: DATA PLATES AND INSTRUCTION HOLDERS	
				FIG. 246 DATA AND IDENTIFICATION PLATES	
1	XDOZZ	19207	12419099	PLATE, IDENTIFICATIO	1
2	PAOZZ	19207	12419100	PLATE, INSTRUCTION	1
2	PAOZZ	81349	M24243/1-B302	RIVET, BLIND	60
				UOC: LWB, LWC, LWD,	
3	PAOZZ	19207	12340917	DECAL	1
4	XDOZZ	19207	12417634	PLATE, IDENTIFICATIO	1
5	PAOZZ	19207	12417616	PLATE, INSTRUCTION	1
6	PAOZZ	0FW39	12420376-001	PLATE, INSTRUCTION	1
				UOC: LWB, LWC, LWD,	
7	PAOZZ	19207	11643398	PLATE, INSTRUCTION	1
8	PAOZZ	19207	12419939	PLATE, INSTRUCTION	1
9	XDOZZ	19207	12420203	PLATE, IDENTIFICATIO	1
				UOC: LWB,	
9	XDOZZ	0FW39	12420205	PLATE, IDENTIFICATIO	1
				UOC: LWD,	
9	XDOZZ	0FW39	12420207-001	PLATE, IDENTIFICATIO	1
				UOC: LWC,	
9	XDOZZ	19207	12418261	PLATE, INSTRUCTION	1
				UOC: LAA,	
9	XDOZZ	0FW39	12414730-001	PLATE, IDENTIFICATIO	1
				UOC: LAC,	
9	XDOZZ	19207	12418088	PLATE, IDENTIFICATIO	1
				UOC: LAD,	
9	XDOZZ	19207	12414732	PLATE, IDENTIFICATIO	1
				UOC: LAB,	
10	XDOZZ	0FW39	12420685	PLATE, SHIPPING DATA	1
				UOC: LAB,	
10	XDOZZ	0FW39	12420684	PLATE, SHIPPING DATA	1
				UOC: LWB,	
10	XDOZZ	0FW39	12420681	PLATE, INSTRUCTION	1
				UOC: LAA,	
10	XDOZZ	0FW39	12420680-001	PLATE, INSTRUCTION	1
				UOC: LAC,	
10	XDOZZ	0FW39	12420679-001	PLATE, INSTRUCTION	1
				UOC: LWC,	
10	XDOZZ	0FW39	12420683	PLATE, INSTRUCTION	1
				UOC: LAD,	
10	XDOZZ	0FW39	12420682	PLATE, INSTRUCTION	1
				UOC: LWD,	
11	XDOZZ	0FW39	12418116-001	PLATE, IDENTIFICATIO	1
12	XDOZZ	0FW39	12418400-001	PLATE, IDENTIFICATIO	1
13	PAOZZ	19207	12419097-001	PLATE, INSTRUCTION	1
14	PAOZZ	19207	12417316	PLATE, INSTRUCTION	2

(1) ITEM NO	(2) SMR CODE	(3) FSCM	(4) PART NUMBER	(5) DESCRIPTION AND USABLE ON CODE (UOC)	(6) QTY
15	PAOZZ	0FW39	12419098	PLATE, INSTRUCTION	1
16	PAOZZ	0FW39	12420459-001	PLATE, INSTRUCTION	1
17	XDOZZ	19207	12419124	PLATE, INSTRUCTION	1
				UOC: LWB, LWC, LWD,	
18	PAOZZ	19207	12417618	PLATE, INSTRUCTION	1
				UOC: LWB, LWC, LWD,	
19	PAOZZ	19207	12417317	PLATE, INSTRUCTION	1
20	PAOZZ	0FW39	12414419-056	SCREW, CAP, HEXAGON H M5 X .8 X 10	12
21	PAOZZ	19207	12414560-011	WASHER, SPRING TENSI M5	6
22	PAOZZ	0FW39	12420759	PLATE, INSTRUCTION	1
23	PAOZZ	19207	12414474-009	NUT, PLAIN, HEXAGON M5 X .8	6
24	PAOZZ	0FW39	12420758	PLATE, INSTRUCTION	1
25	PAOZZ	81337	6-1-2248	SIGN KIT, VEHICLE CL	1

END OF FIGURE

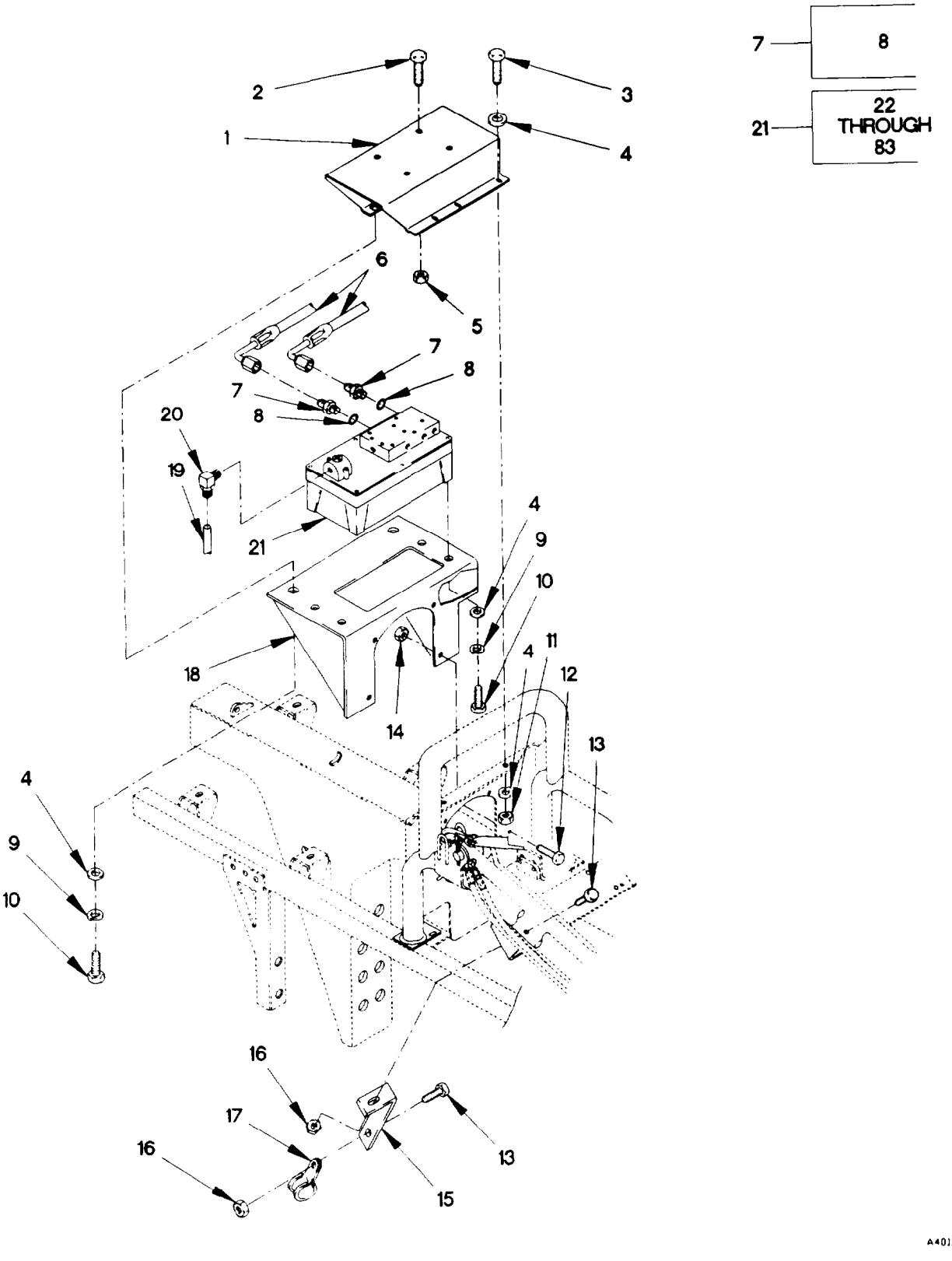

Figure 247. Air/Hydraulic Power Unit, Hoses, and Fittings
(Sheet 1 of 3)

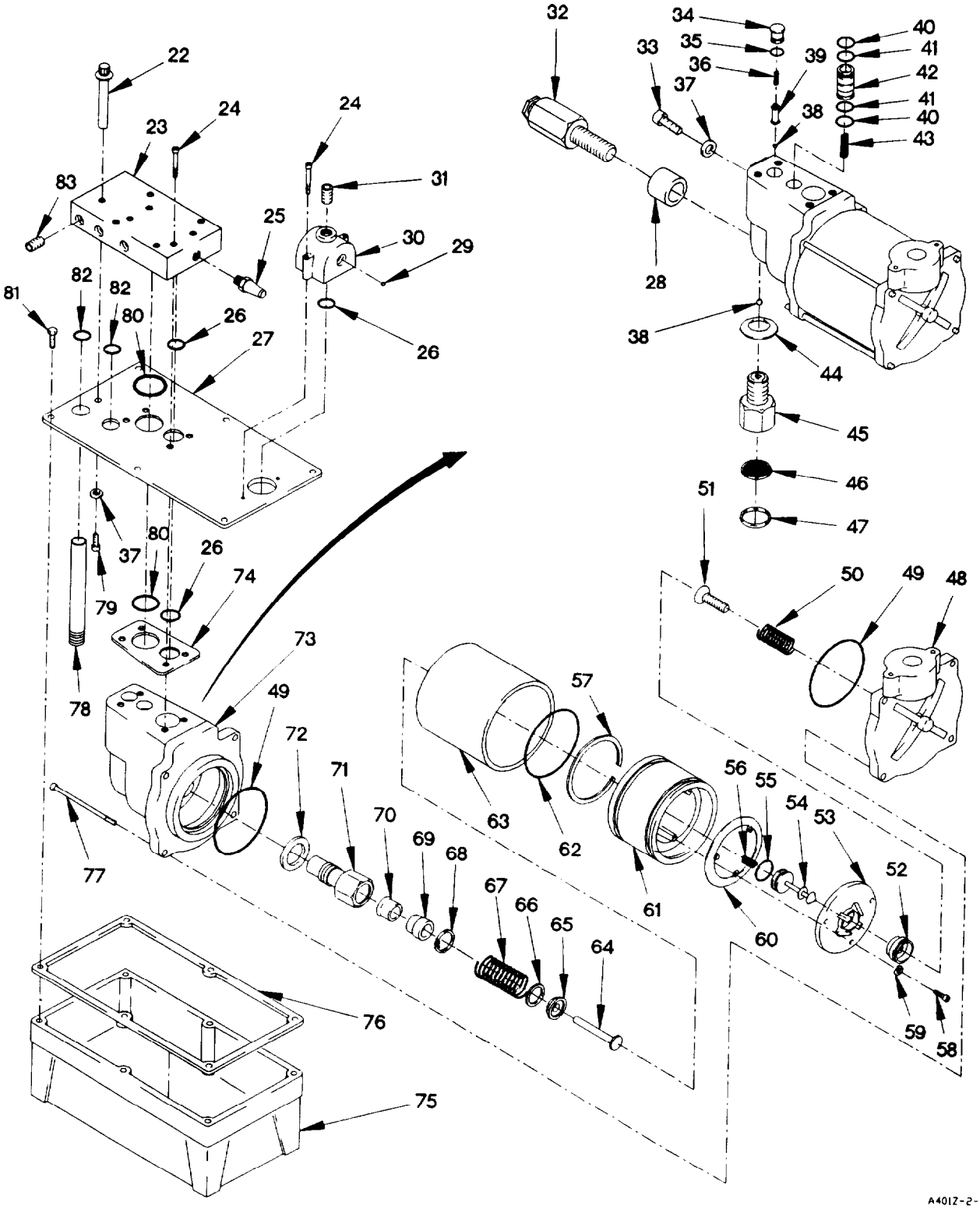

Figure 247. Air/Hydraulic Power Unit, Hoses, and Fittings
(Sheet 2 of 3)

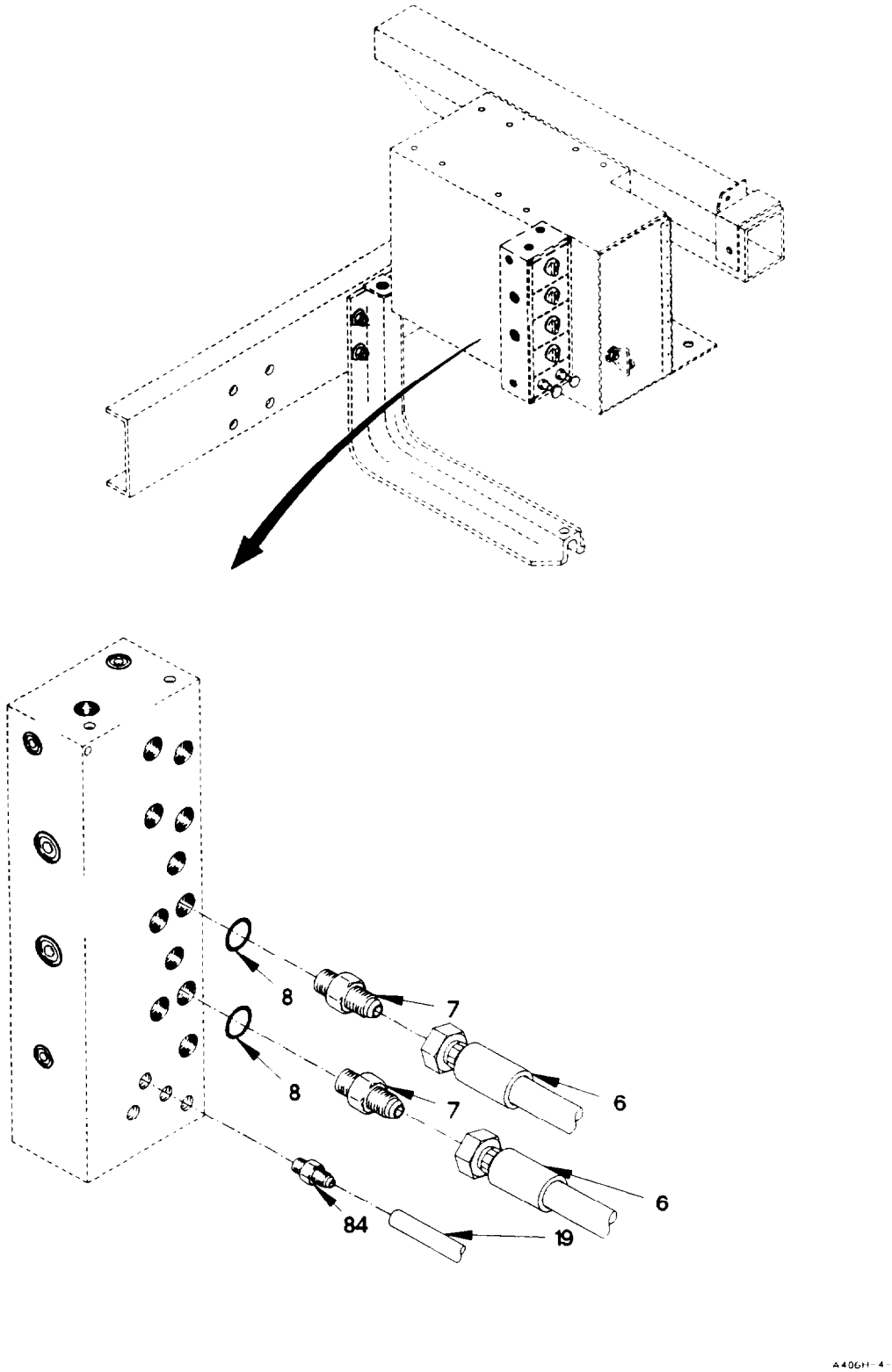

Figure 247. Air/Hydraulic Power Unit, Hoses, and Fittings
(Sheet 3 of 3)

(1) ITEM NO	(2) SMR CODE	(3) FSCM	(4) PART NUMBER	(5) DESCRIPTION AND USABLE ON CODE (UOC)	(6) QTY
				GROUP 2401: PUMP AND MOTOR FIG. 247 AIR/HYDRAULIC POWER UNIT, HOSES AND FITTINGS	
1	PAOZZ	19207	12421267	BRACKET, MULTIPLE AN	1
2	PAOZZ	05824	M10X1.5X30 DIN933 ST	SCREW, CAP, HEXAGON H M10 X 1.5 X 30	4
3	PAOZZ	81495	071 408 32	BOLT, MACHINE M8 X 1.25 X 25	4
4	PAOZZ	34914	990 3861	WASHER, FLAT M8.4	8
5	PAOZZ	19207	12414315-009	NUT, SELF-LOCKING, HE M10 X 1.5	4
6	PAOZZ	0FW39	12420745-009	HOSE ASSEMBLY, NONME	2
7	PAOZZ	96906	MS51525A4	ADAPTER, STRAIGHT, TU	4
8	PAOZZ	96906	MS28778-4	.O-RING	4
9	PAOZZ	19207	12414560-018	WASHER, LOCK M8	6
10	PAOZZ	15526	933-M8X20	SCREW, CAP, HEXAGON H M8 X 1.25 X 20	4
11	PAOZZ	1FH08	DIN555M8	NUT, PLAIN, HEXAGON M8 X 1.25	2
12	PAOZZ	19207	12414307-063	BOLT, MACHINE M10 X 1.5 X 25	4
13	PAOZZ	56161	10503805	SCREW, CAP, HEXAGON H M6 X 1 X 20	2
14	PAOZZ	19207	12414308-019	NUT, SELF-LOCKING, HE M10 X 1.5	4
15	PAOZZ	19207	12420411	BRACKET, ANGLE	1
16	PAOZZ	19207	12414308-002	NUT, SELF-LOCKING, EX M6 X 1	2
17	PAOZZ	18076	S630H-36	CLAMP, LOOP	1
18	PAOZZ	19207	12420792-003	BRACKET, MOUNTING	1
19	MOOZZ	19207	12420572-004X	TUBING, NONMETALLIC MAKE FROM HOSE P/N: NT-10004-BLK (79470), CUT TO LENGTH	V
20	PAOZZ	79470	1469X4X4	ELBOW, PIPE TO TUBE	1
21	PAOFF	0PFG7	58477	TANK AND PUMP UNIT	1
22	PAFZZ	0PFG7	251507	.GAGE ROD-CAP, LIQUID	1
23	PAFZZ	0PFG7	58473	.MANIFOLD ASSEMBLY, H	1
24	PAFZZ	0PFG7	11151	.SCREW, MACHINE	6
25	PAFZZ	0PFG7	15459	.PNEUMATIC MUFFLER, E	1
26	PAFZZ	0PFG7	251217	.O-RING	3
27	PAFZZ	0PFG7	420828	.COVER, ACCESS	1
28	PAFZZ	0PFG7	33959	.CYLINDER, ACTUATING,	1
29	PAFZZ	15434	216296	.PLUG, VENT	1
30	PAFZZ	0PFG7	350894	.FILTER BODY, INTAKE	1
31	PAFZZ	0PFG7	14972	.PLUG, PIPE	1
32	PAFZZ	45225	21278-40	.VALVE, SAFETY RELIEF	1
33	PAFZZ	82423	SMD331453-1	.SCREW, CAP, SOCKET HE 6-40 X 3/16	1
34	PAFZZ	0PFG7	36497	.RETAINER, SEAT, VALVE	1
35	PAFZZ	81349	M83461/1-438	.PACKING, PREFORMED	1
36	PAFZZ	45225	10445	.SPRING, HELICAL, COMP	1
37	PAFZZ	0PFG7	10442	.WASHER, FLAT	2
38	PAFZZ	54225	10423	.BALL, BEARING	2
39	PAFZZ	0PFG7	202568	.GUIDE, BALL, CHECK VA	1
40	PAFZZ	45225	11863-012	.RETAINER, PACKING	2
41	PAFZZ	0PFG7	19775	.O-RING	2

(1) ITEM NO	(2) SMR CODE	(3) FSCM	(4) PART NUMBER	(5) DESCRIPTION AND USABLE ON CODE (UOC)	(6) QTY
42	PAFZZ	K0754	21094	.BUSHING, SLEEVE	1
43	PAFZZ	0PFG7	16448	.SPRING, HELICAL, COMP	1
44	PAFZZ	45225	10263	.WASHER, FLAT	1
45	PAFZZ	0PFG7	48010	.ADAPTER, FLUID FILTE	1
46	PAOZZ	0PFG7	214578	.FILTER ELEMENT, ELUI	1
47	PAOZZ	0PFG7	214586	.RING, RETAINING	1
48	PAFZZ	0PFG7	51480	.HEAD, LINEAR ACTUATI	1
49	PAFZZ	0PFG7	251391	.WASHER, FLAT	2
50	PAFZZ	45225	205679	.SPRING, HELICAL, COMP	1
51	PAFZZ	0PFG7	205674	.SCREW, MACHINE	1
52	PAFZZ	45225	28183	.PISTON, PUMP	1
53	PAFZZ	52894	3382-2	.PISTON, LINEAR ACTUA	1
54	PAFZZ	0PFG7	305475	.VALVE, POPPET, ENGINE	1
55	PAFZZ	0PFG7	250192	.O-RING	1
56	PAFZZ	45225	12692	.SPRING, HELICAL, COMP	1
57	PAFZZ	45225	14265	.RING, WEARING	2
58	PAFZZ	0PFG7	211054	.SCREW, MACHINE	3
59	PAFZZ	0PFG7	10241	.WASHER, LOCK	3
60	PAFZZ	45225	28239	.GASKET	1
61	PAFZZ	0PFG7	52390	.PISTON, HYDRAULIC MO	1
62	PAFZZ	13841	11446	.GASKET	2
63	PAFZZ	0PFG7	37434	.CYLINDER ASSEMBLY, A	1
64	PAFZZ	0PFG7	28400	.PISTON, VALVE	1
65	PAFZZ	0PFG7	211082	.GUIDE, PISTON ROD	1
66	PAFZZ	0PFG7	202613	.BUMPER, NONMETALLIC	1
67	PAFZZ	45225	13938	.SPRING, HELICAL, COMP	1
68	PAFZZ	0PFG7	11034	.RING, RETAINING	1
69	PAFZZ	0PFG7	14121	.RETAINER, PACKING	1
70	PAFZZ	0PFG7	202624	.RETAINER, PACKING	1
71	PAFZZ	0PFG7	10970	.PLUG, PIPE	1
72	PAFZZ	45225	10261	.WASHER, FLAT	1
73	PAFZZ	0PFG7	50494	.HOUSING, LIQUID PUMP	1
74	PAFZZ	0PFG7	350900	.GASKET	1
75	PAOZZ	0PFG7	350887	.RESERVOIR, HYDRAULIC	1
76	PAOZZ	98897	350903	.GASKET	1
77	PAFZZ	0PFG7	17428	.SCREW, CAP, SOCKET HE	4
78	PAFZZ	0PFG7	15426	.NIPPLE, PIPE	1
79	PAFZZ	0PFG7	10807	.SCREW, MACHINE	1
80	PAFZZ	0PFG7	251216	.O-RING	1
81	PAOZZ	0PFG7	14456	.SCREW, MACHINE	6
82	PAFZZ	81349	M83461/1-442	.O-RING	2
83	PAFZZ	0PFG7	11048	.PLUG, PIPE	1
84	PAOZZ	0TE27	AQ68-DOT-4X2SIL	ADAPTER, STRAIGHT, PI	1

END OF FIGURE

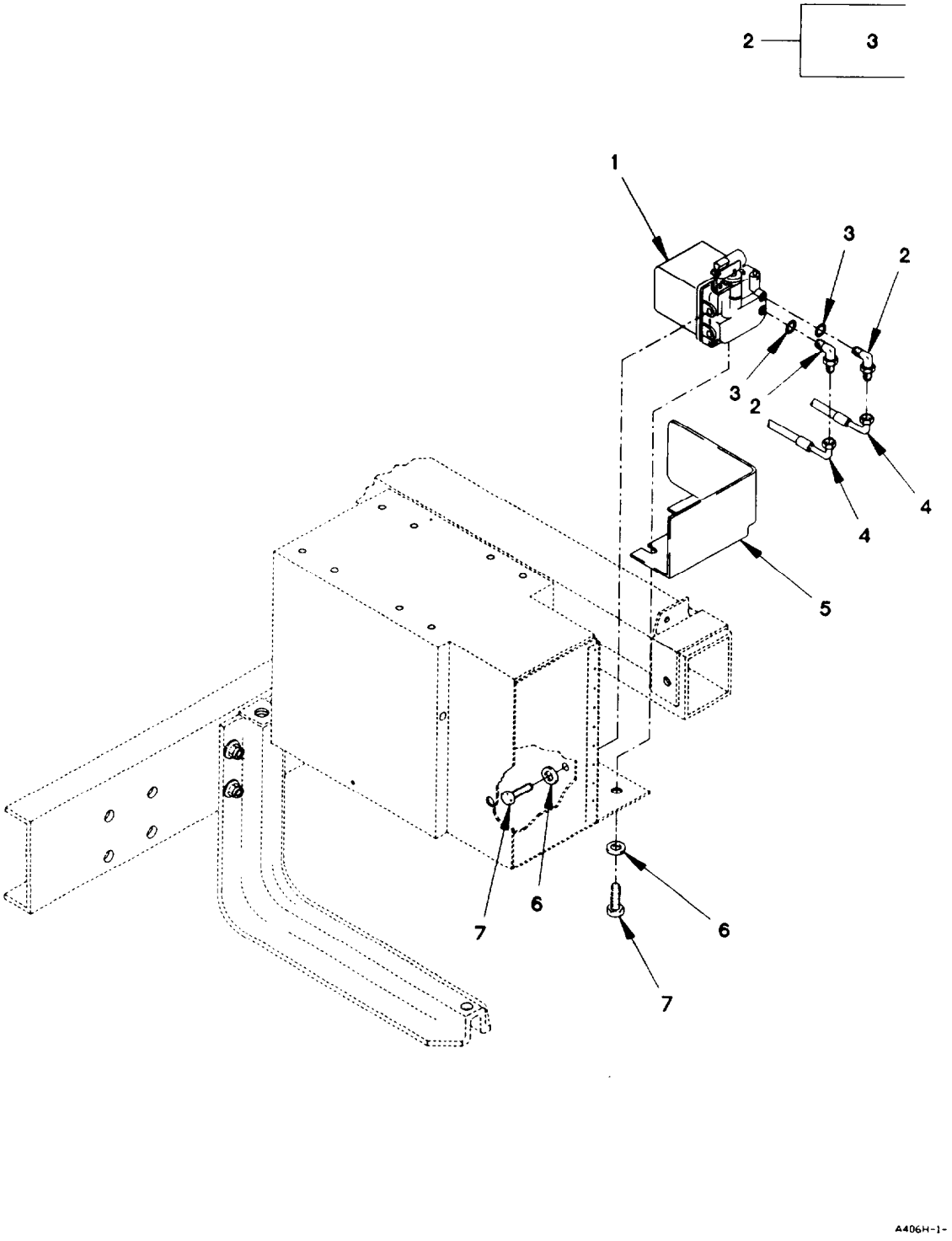

Figure 248. Back-up Hydraulic Pump, Hoses, and Fittings (Sheet 1 of 2)

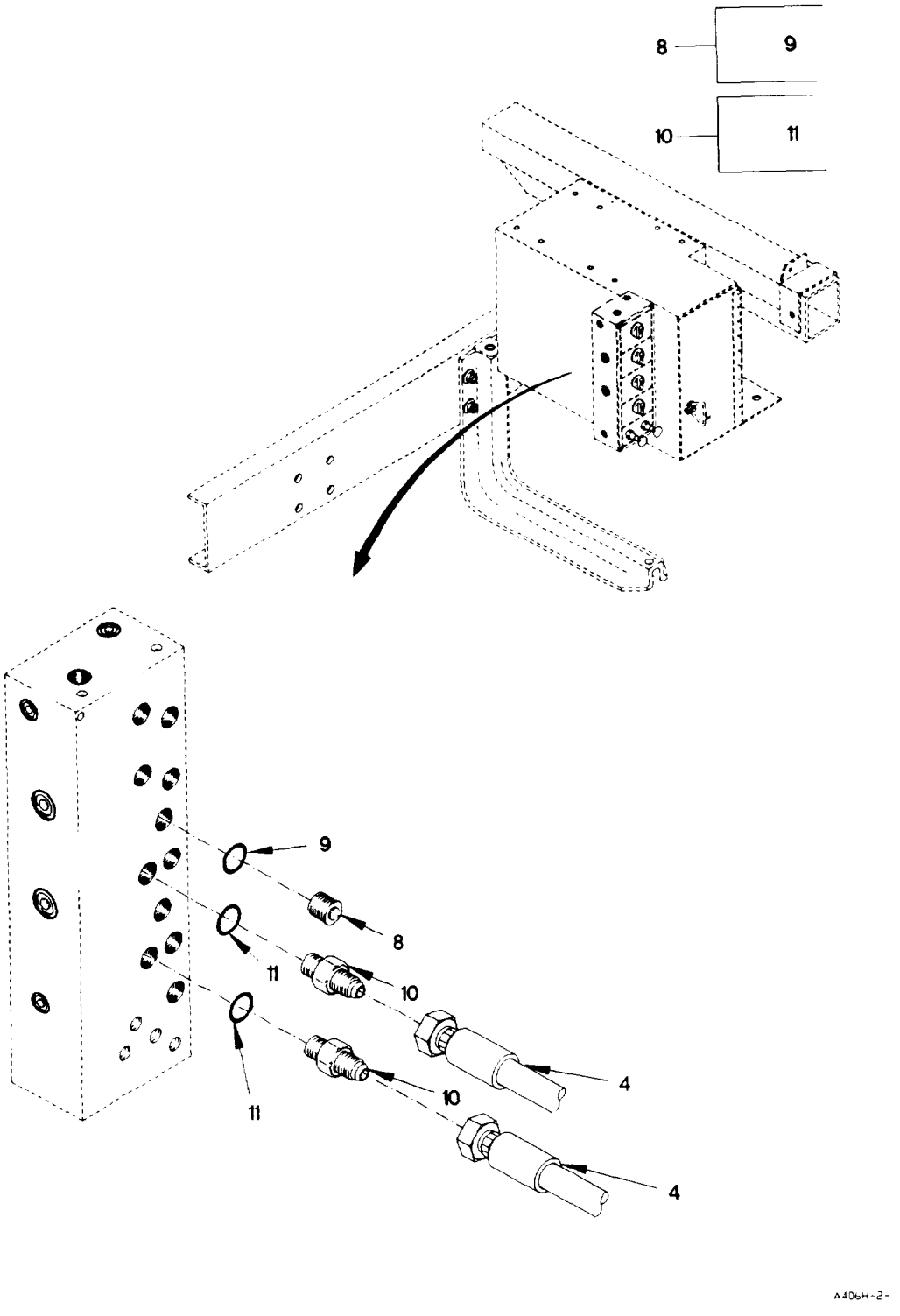

Figure 248. Back-up Hydraulic Pump, Hoses, and Fittings (Sheet 2 of 2)

(1) ITEM NO	(2) SMR CODE	(3) FSCM	(4) PART NUMBER	(5) DESCRIPTION AND USABLE ON CODE (UOC)	(6) QTY
				GROUP 2401: PUMP AND MOTOR FIG. 248 BACK-UP HSOE HYDRAULIC PUMP, HOSES, AND FITTINGS	
1	PAOZZ	26952	HP5003-4204	PUMP, HYDRAULIC RAM,	1
2	PAOZZ	96906	MS51527A4Z	ELBOW, TUBE TO BOSS	2
3	PAOZZ	96906	MS28778-4	.O-RING	1
4	PAOZZ	19207	12420745-006	HOSE ASSEMBLY, NONME MAKE FROM 2766-X (01276), 43 IN	2
5	PAOZZ	0FW39	12420747	COVER, HYDRAULIC, PUM	1
6	PAOZZ	64678	007349010003	WASHER, FLAT M10	4
7	PAOZZ	80204	B1821BH038C100N	SCREW, CAP, HEXAGON H 3/8-16 X 1	4
8	PAOZZ	81343	4 090109AB	PLUG, MACHINE THREAD	1
9	PAOZZ	96906	MS28778-4	.O-RING	1
10	PAOZZ	96906	MS51525A4	ADAPTER, STRAIGHT, TU	2
11	PAOZZ	96906	MS28778-4	.O-RING	1

END OF FIGURE

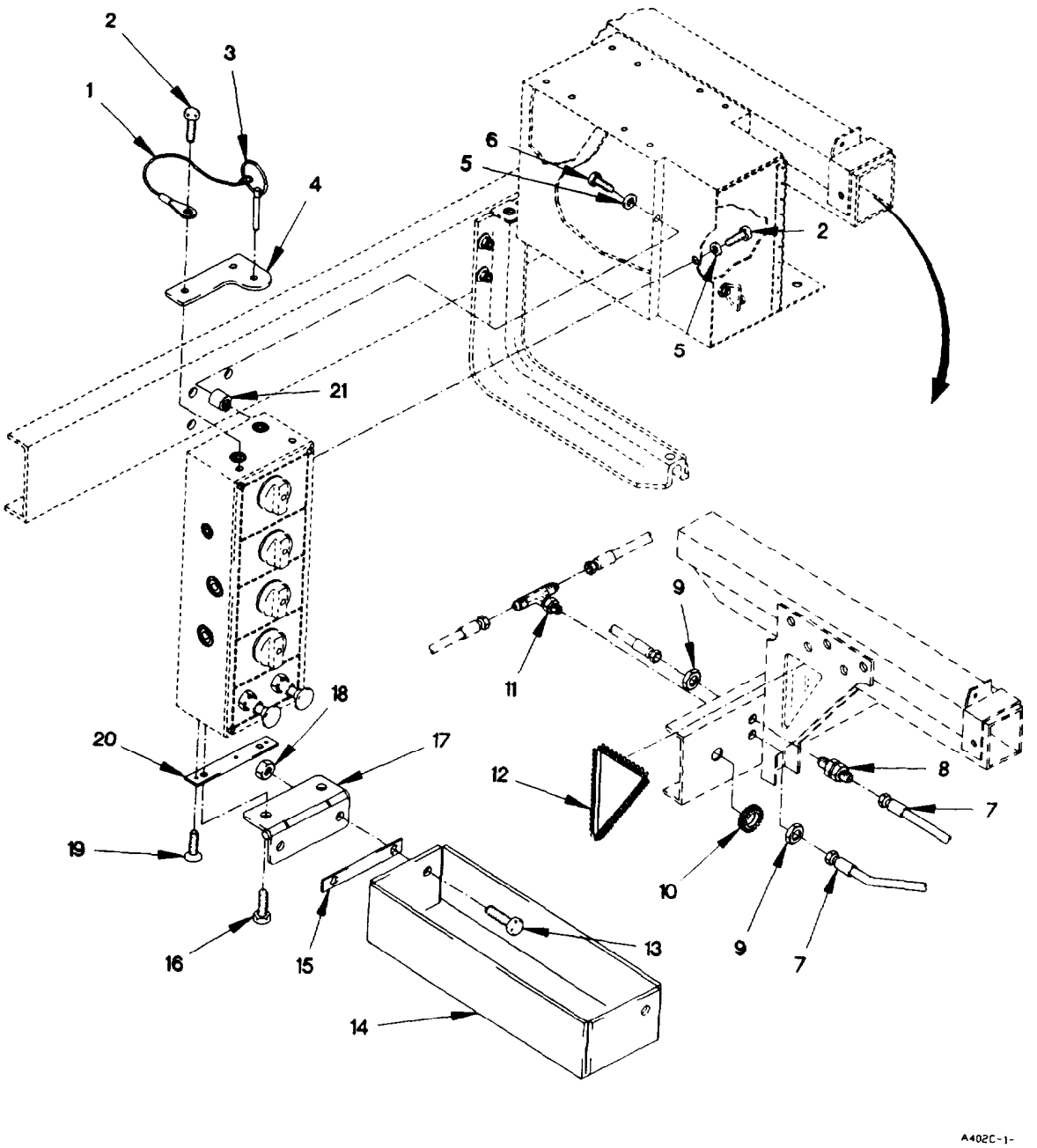

Figure 249. Hydraulic Manifold, Hoses, and Fittings (Sheet 1 of 2)

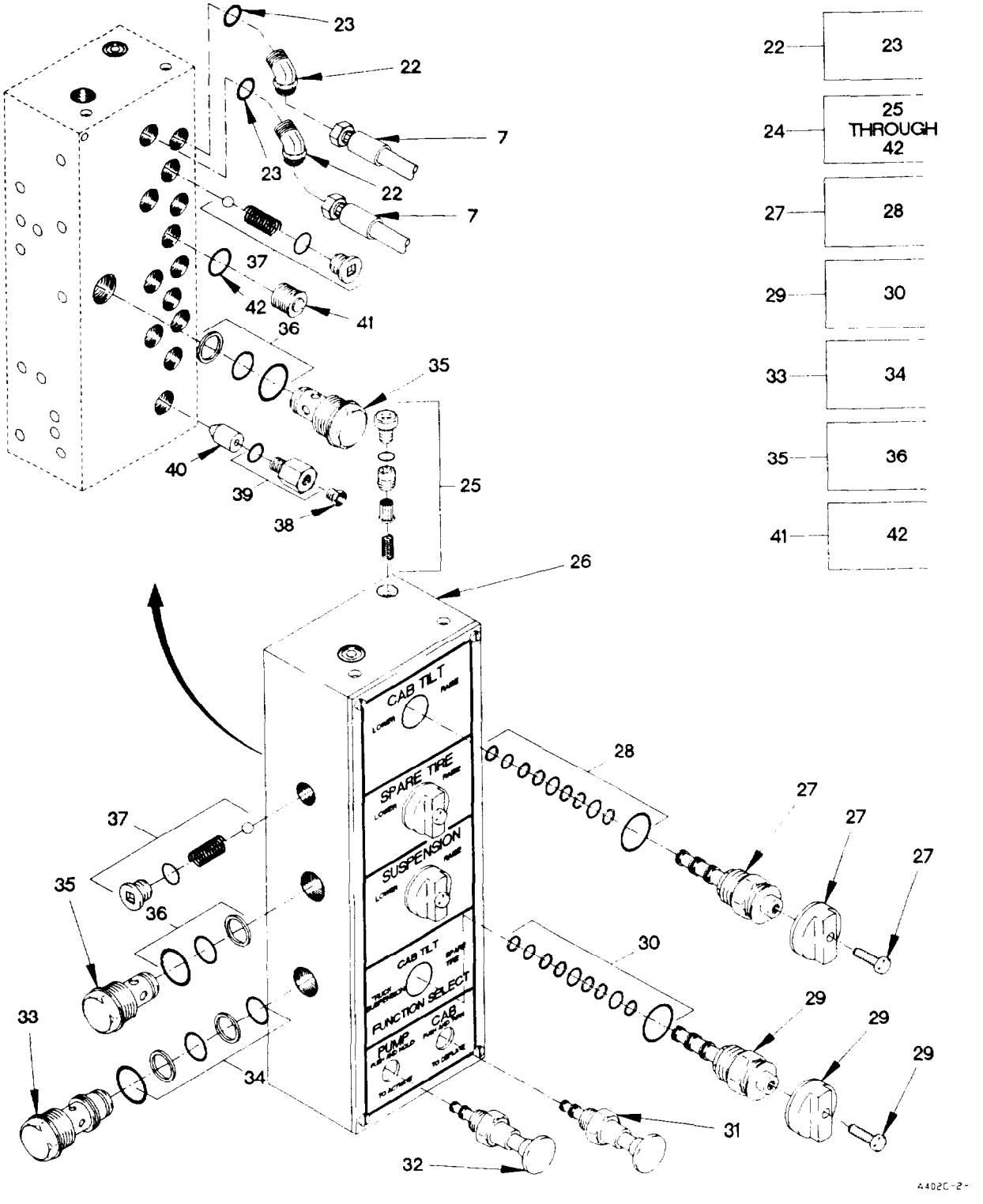

Figure 249. Hydraulic Manifold, Hoses, and Fittings (Sheet 2 of 2)

(1) ITEM NO	(2) SMR CODE	(3) FSCM	(4) PART NUMBER	(5) DESCRIPTION AND USABLE ON CODE (UOC)	(6) QTY
				GROUP 2402: MANIFOLD AND CONTROL VALVES	
				FIG. 249 HYDRAULIC MANIFOLD, HOSES AND FITTINGS	
1	PAOZZ	84256	LT1504-C10-16	LANYARD ASSEMBLY	1
2	PAOZZ	19207	12414419-093	BOLT, MACHINE M8 X 1.25 X 25	3
3	PAOZZ	84256	BLDC6-10	PIN, QUICK RELEASE	1
4	PAOZZ	19207	12421152	PLATE, COVER, INTAKE	1
5	PAOZZ	19207	12421459	SPACER, RING	4
6	PAOZZ	19207	12414419-095	SCREW, CAP, HEXAGON H M8 X 1.25 X 35	2
7	PAOZZ	19207	12420745-005	HOSE ASSEMBLY, NONME MAKE FROM 2766-X (01276), 44 IN	2
8	PAOZZ	81343	4-4 070601CA	NIPPLE, TUBE	1
9	PAOZZ	81343	4-070118C	RING, EXTERNALLY THR	2
10	PAOZZ	96906	MS21266-4N	GROMMET, NONMETALLIC	2
11	PAOZZ	30780	533T-4-4	TEE, TUBE	1
12	PAOZZ	96906	MS21266-5N	GROMMET, NONMETALLIC	1
13	PAOZZ	19207	12414307-037	BOLT, MACHINE M8 X 1.25 X 25	2
14	PAOZZ	19207	12421154	COVER, INTAKE MANIFO	1
15	MOOOO	19207	12420774	PLATE, MANF COVER MAKE FROM PLATE, P/N MS90514-003 (96906)	1
16	PAOZZ	19207	12414419-055	SCREW, CAP, HEXAGON H M5 X 0.8 X 8	2
17	PAOZZ	19207	12420760	HINGE, BUTT	1
18	PAOZZ	19207	12414308-018	NUT, SELF-LOCKING, EX M8 X 1.25	2
19	PAOZZ	80204	B1834A08C014N	SCREW, MACHINE	2
20	MOOOO	19207	12420775	SPACER, MANFIFOLD CO MAKE FROM PLATE, P/N MS90514-033 (96906)	1
21	MOOOO	19207	12420733	SPACER, MANIFOLD MAKE FROM TUBE, P/N ASTM A513 (81346)	2
22	PAOZZ	81343	4-4 070320C	ELBOW, TUBE TO BOSS	2
23	PAOZZ	96906	MS28778-4	.O-RING	1
24	PAOOO	19207	12420621	MANIFOLD ASSEMBLY, H	1
25	PAOZZ	09990	75223-11	.FILTER ELEMENT, FLUI	2
26	XAOOO	09990	17004-34	.BODY,	1
27	PAOZZ	09990	DM104LD1X4879	.VALVE, ROTARY, DIRECT	3
28	PAOZZ	09990	SK10-4	. .PARTS KIT, REPLACEME	1
29	PAOZZ	09990	DM104LN8X4879	.KNOB	1
30	PAOZZ	09990	SK10-4	. .PARTS KIT, REPLACEME	1
31	PAOZZ	88233	25228-02	.VALVE, STOP-CHECK	1
32	PAOZZ	88233	25228-01	.VALVE, STOP-CHECK	1
33	PAOZZ	09990	CP104PX4879	.VALVE, CHECK	1
34	PAOZZ	09990	SK10-3	. .PARTS KIT, SEAL REPL	1
35	PAOZZ	09990	CV101PX4879	.VALVE, CHECK	2
36	PAOZZ	09990	SK10-2	. .PARTS KIT, SEAL REPL	1
37	PAOZZ	09990	745801	.VALVE, CHECK	2
38	PAOZZ	09990	25110-03	.MUFFLER, INTAKE	1

(1) ITEM NO	(2) SMR CODE	(3) FSCM	(4) PART NUMBER	(5) DESCRIPTION AND USABLE ON CODE (UOC)	(6) QTY
39	PAOZZ	09990	25110-02	.ADAPTER, CHECK VALVE	1
40	PAOZZ	09990	25146-19	.VALVE, CHECK	1
41	PAOZZ	09990	108X4K	.PLUG, PIPE	1
42	PAOZZ	96906	MS28778-4	. .O-RING	1

END OF FIGURE

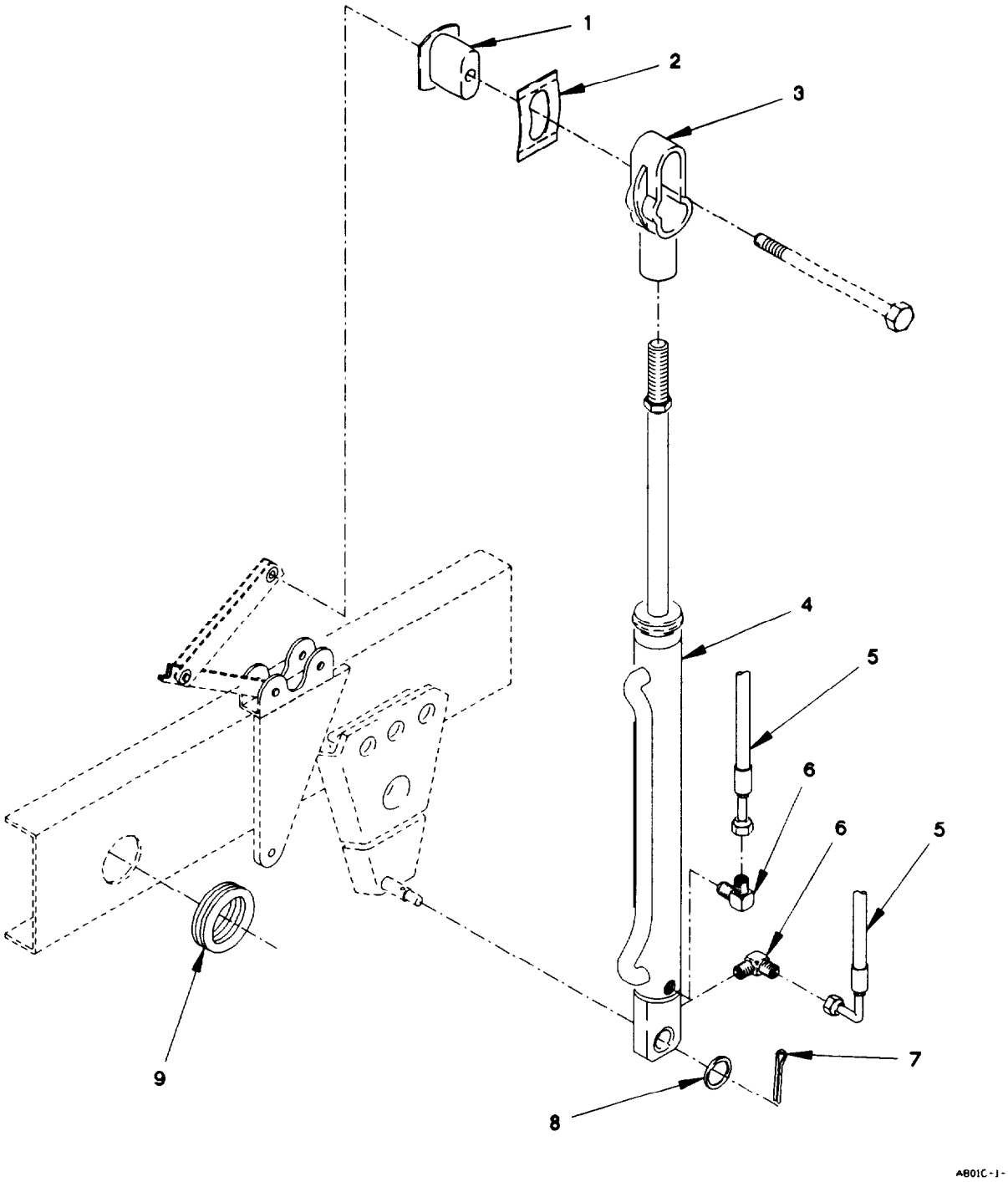

Figure 250. Cab Hydraulic Cylinder, Hoses, and Fittings (Sheet 1 of 2)

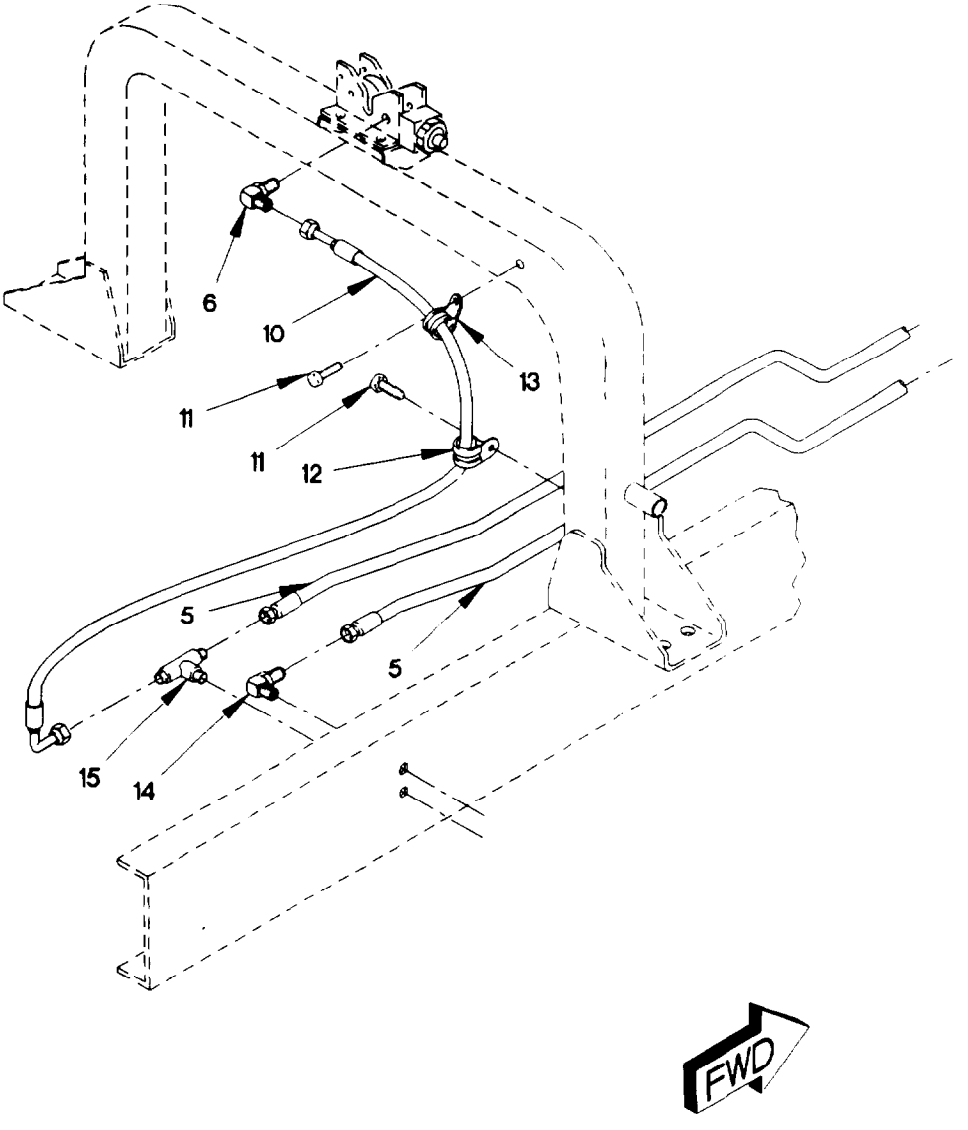

AB01C-2-

Figure 250. Cab Hydraulic Cylinder, Hoses, and Fittings (Sheet 2 of 2)

(1) ITEM NO	(2) SMR CODE	(3) FSCM	(4) PART NUMBER	(5) DESCRIPTION AND USABLE ON CODE (UOC)		(6) QTY
				GROUP 2404: TILT CYLINDERS AND TILT CRANK		
				FIG. 250 CAB HYDRAULIC CYLINDER, HOSES AND FITTINGS		
1	PAOZZ	19207	12417905	CAM, CONTROL		1
2	PAOZZ	19207	12418220	WASHER, SPRING TENSI M26		1
3	PGOZZ	19207	12417924	BRACKET, MOUNTING		1
4	PAOZZ	26952	CA1513-7322PID23	CYLINDER ASSEMBLY, A		1
5	PAOZZ	0FW39	12417262-002	HOSE ASSEMBLY, NONME		2
6	PAOZZ	96906	MS51527A4P	ELBOW, TUBE TO BOSS		3
7	PAOZZ	96906	MS24665-459	PIN, COTTER		1
8	PAOZZ	81349	D63474/1-30	WASHER, SPRING TENSI M21.52		1
9	PAOZZ	96906	MS21266-5N	GROMMET, NONMETALLIC	V	
10	PAOZZ	19207	12417262-005	HOSE ASSEMBLY, NONME		1
11	PAOZZ	56161	10503805	SCREW, CAP, HEXAGON H M6 X 1 X 20		2
12	PAOZZ	18076	S630H-16	CLAMP, LOOP		1
13	PAOZZ	18076	S630H-10	CLAMP, LOOP		1
14	PAOZZ	96906	MS51520A4	NIPPLE, TUBE		1
15	PAOZZ	30780	533T-4-4	TEE, TUBE		1

END OF FIGURE

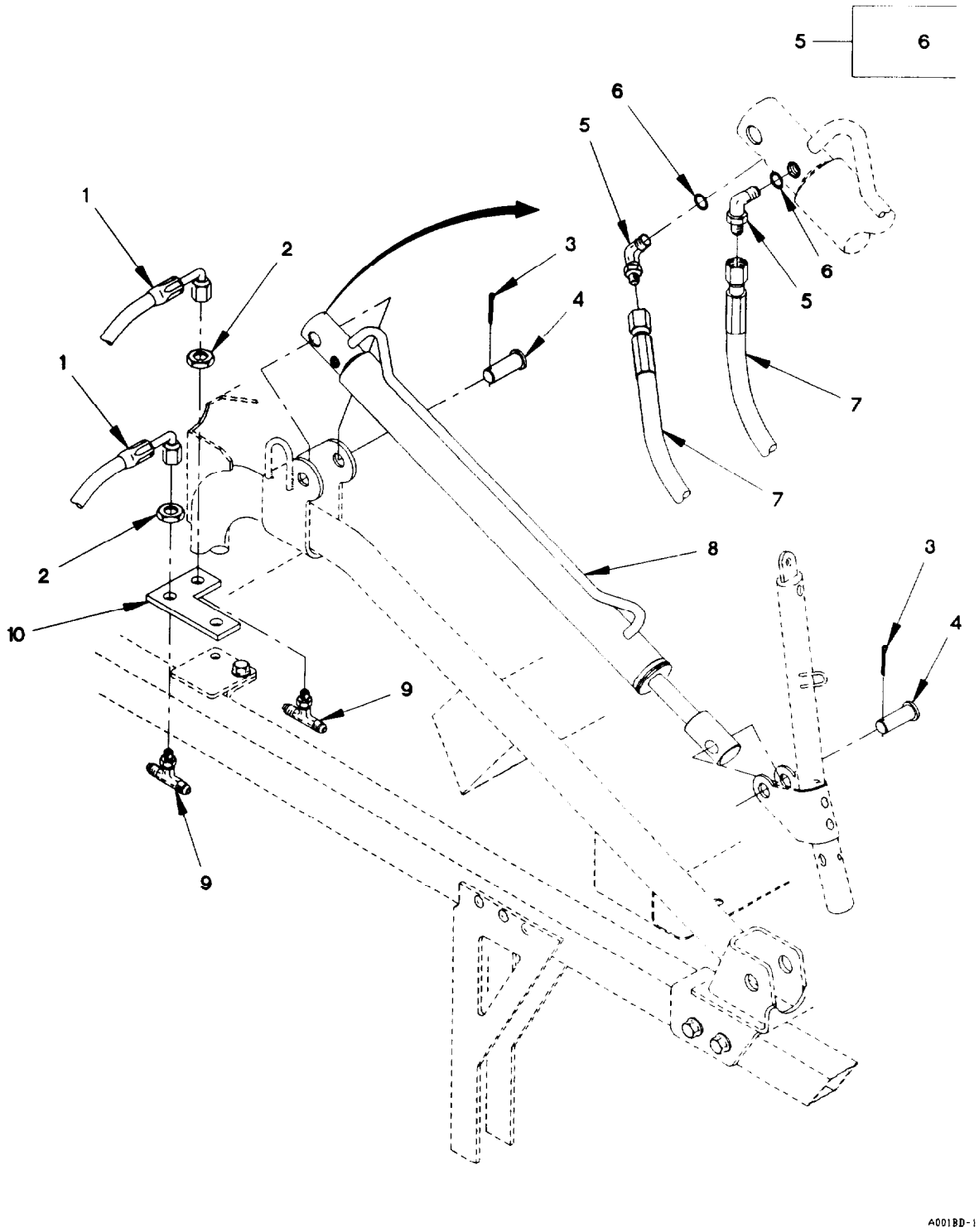

Figure 251. Spare Tire Retainer Lift Cylinder, Hoses, and Fittings
(Sheet 1 of 2)

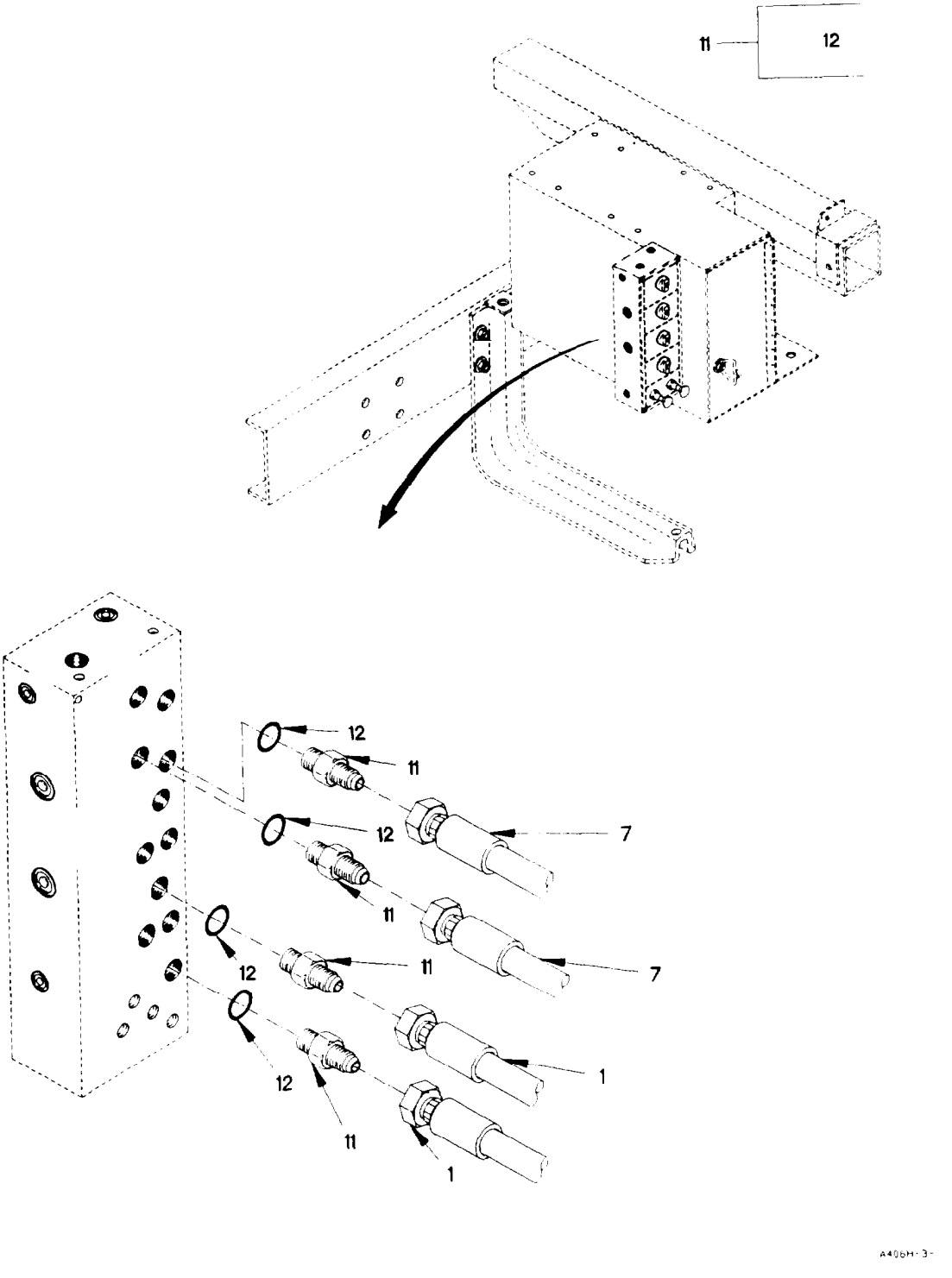

Figure 251. Spare Tire Retainer Lift Cylinder, Hoses, and Fittings
(Sheet 2 of 2)

(1) ITEM NO	(2) SMR CODE	(3) FSCM	(4) PART NUMBER	(5) DESCRIPTION AND USABLE ON CODE (UOC)	(6) QTY
				GROUP 2404: TILT CYLINDERS AND TILT CRANK	
				FIG. 251 SPARE TIRE RETAINER LIFT CYLINDER, HOSES AND FITTINGS	
1	PAOZZ	19207	12420745-008	HOSE ASSEMBLY, NONME	2
2	PAOZZ	81343	4-070118C	RING, EXTERNALLY THR	2
3	PAOZZ	96906	MS24665-459	PIN, COTTER	2
4	PAOZZ	19207	12417653-195	PIN, STRAIGHT, HEADED	2
5	PAOZZ	96906	MS51527A4Z	ELBOW, TUBE TO BOSS	2
6	PAOZZ	96906	MS28778-4	.O-RING	1
7	PAOZZ	0FW39	12420745-010	HOSE ASSEMBLY, NONME	2
8	PAOZZ	26952	UTTN91008.19	CYLINDER, ASSEMBLY, A	1
9	PAOZZ	96906	MS51515A4	TEE, TUBE	2
10	PAOZZ	19207	12421263	BRACE, CORNER	1
11	PAOZZ	96906	MS51525A4	ADAPTER, STRAIGHT, TU	4
12	PAOZZ	96906	MS28778-4	.O-RING	1
				END OF FIGURE	

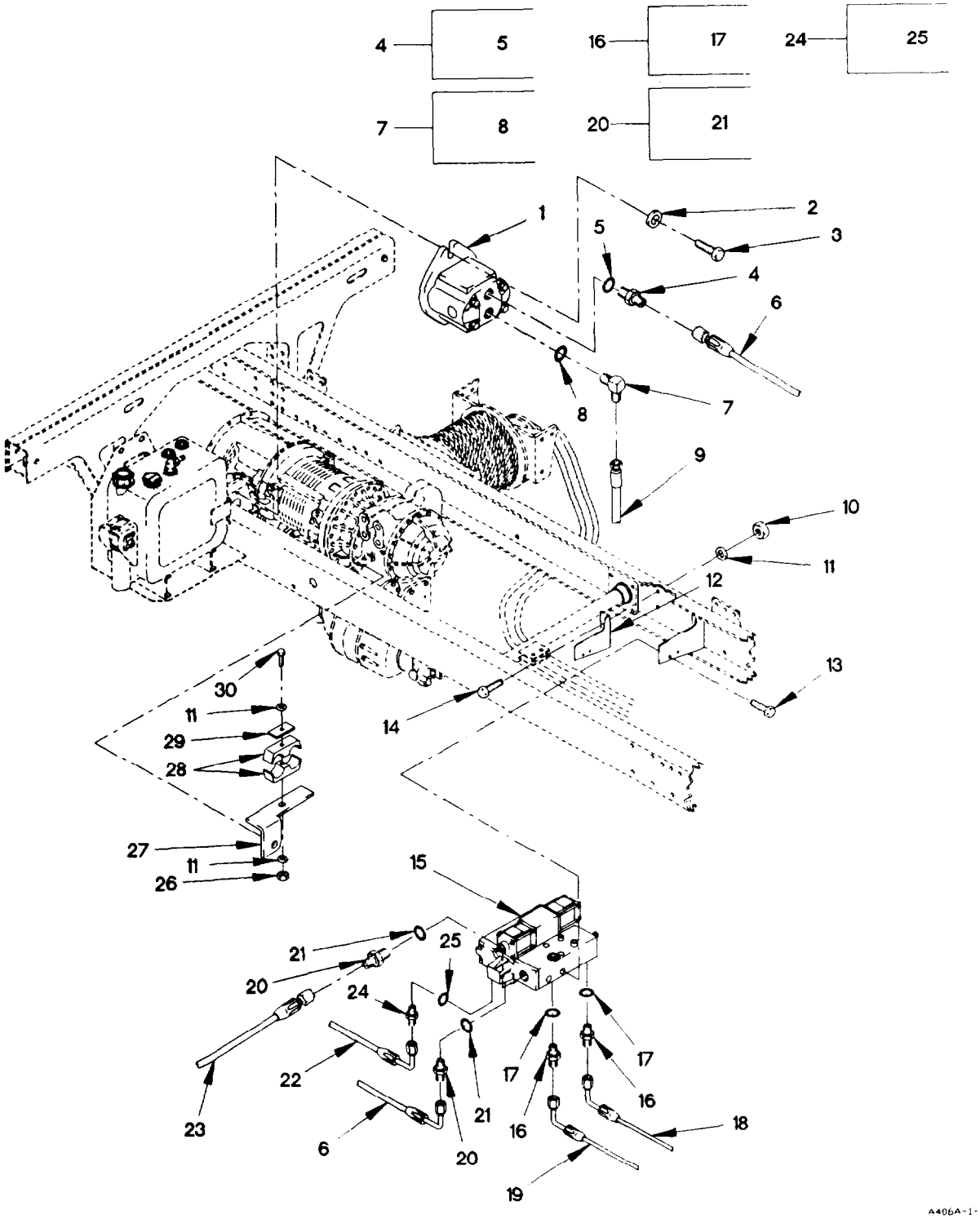

Figure 252. Hydraulic Rotary Pump, Winch Control Valve, Hoses, and Fittings (Sheet 1 of 4)

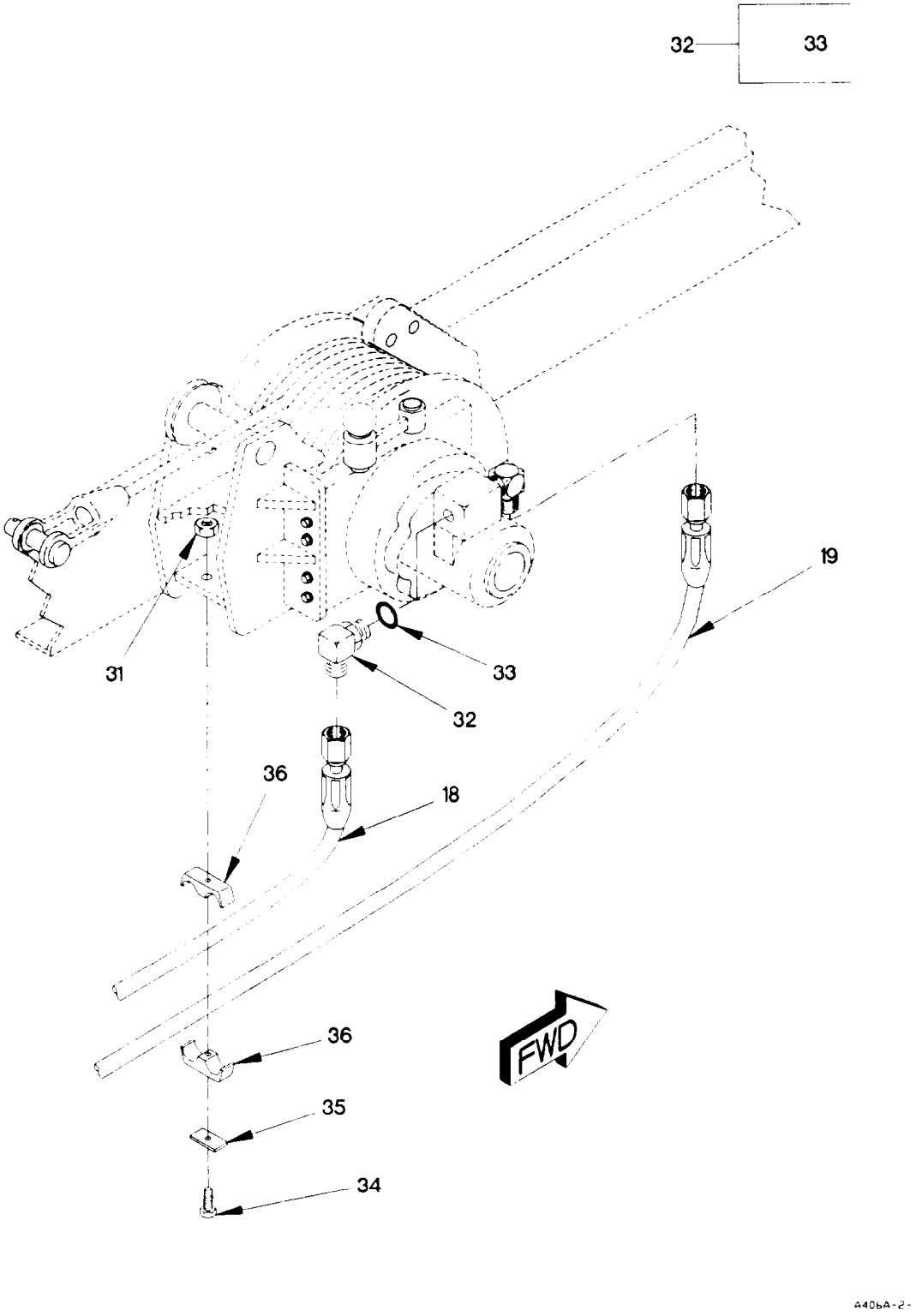

Figure 252. Hydraulic Rotary Pump, Winch Control Valve, Hoses, and Fittings (Sheet 2 of 4)

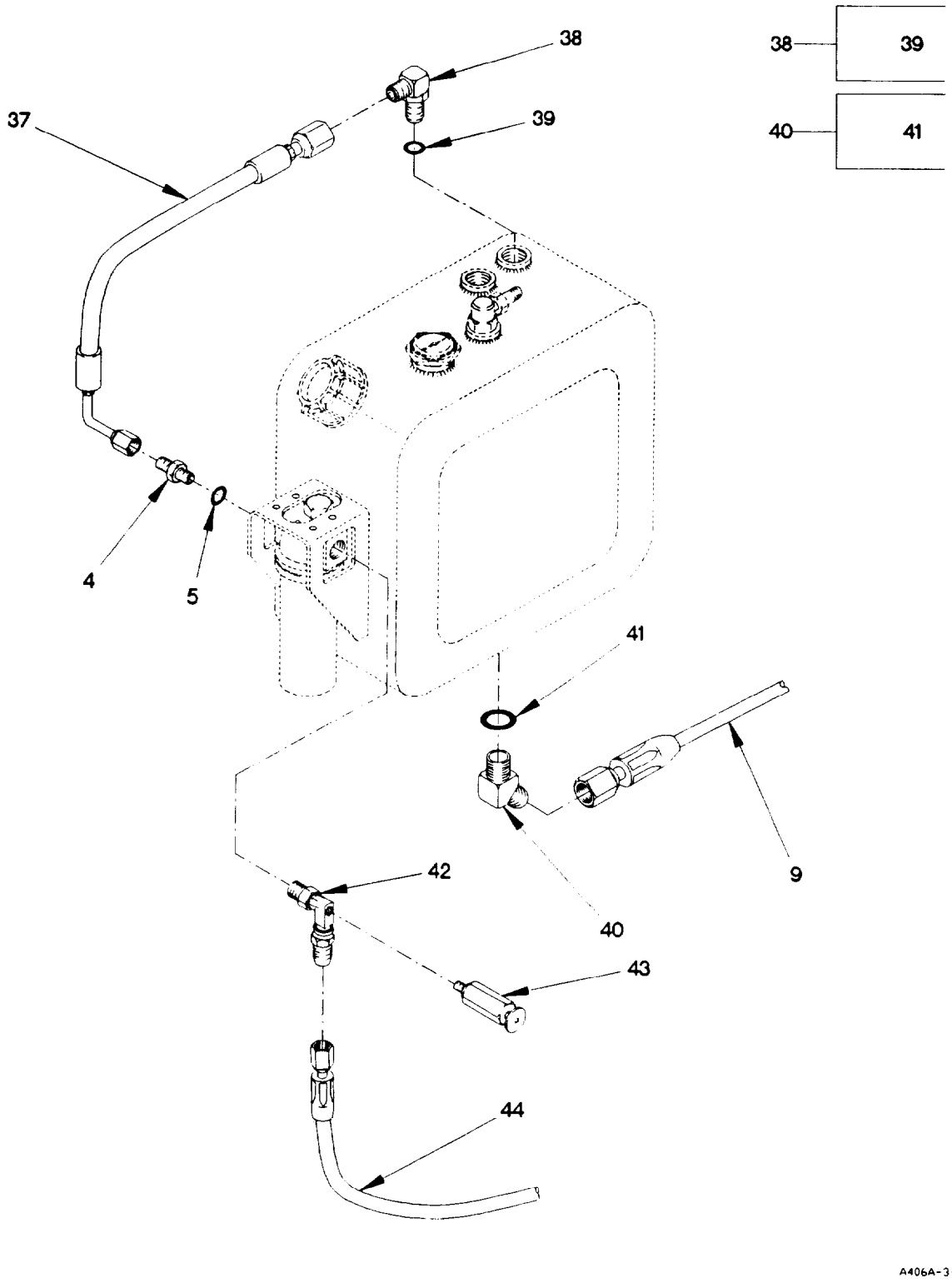

Figure 252. Hydraulic Rotary Pump, Winch Control Valve, Hoses, and Fittings (Sheet 3 of 4)

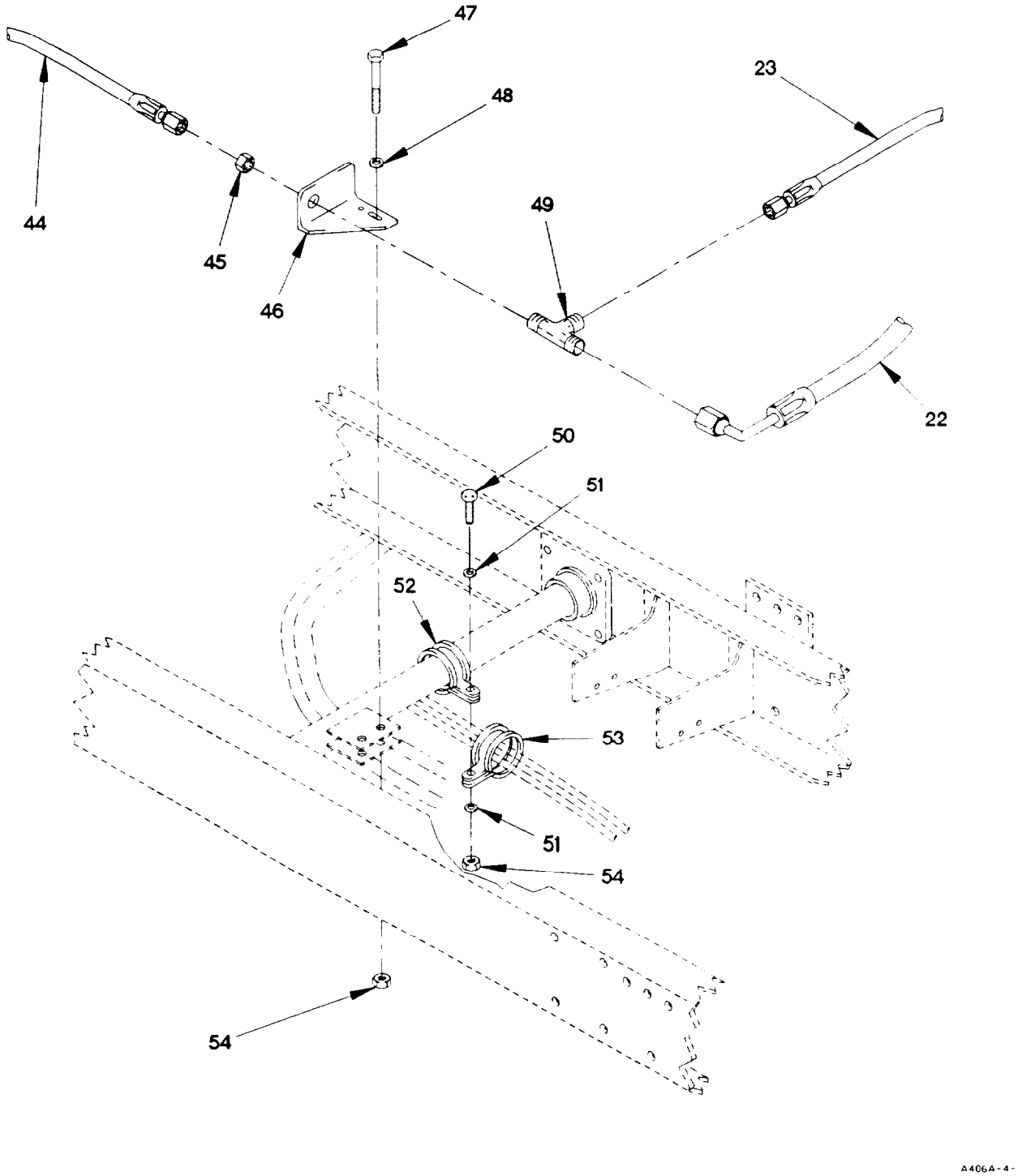

Figure 252. Hydraulic Rotary Pump, Winch Control Valve, Hoses, and Fittings (Sheet 4 of 4)

(1) ITEM NO	(2) SMR CODE	(3) FSCM	(4) PART NUMBER	(5) DESCRIPTION AND USABLE ON CODE (UOC)	(6) QTY
				GROUP 2406: STRAINERS, FILTERS, LINES AND FITTINGS	
				FIG. 252 HYDRAULIC ROTARY PUMP, WINCH CONTROL VALVE, HOSES AND FITTINGS	
1	PAFZZ	14120	B5501-33364	PUMP, ROTARY UOC: LWB, LWC, LWD,	1
2	PAFZZ	21969	A 13 DIN125-ST	WASHER, FLAT M13 UOC: LWB, LWC, LWD,	2
3	PAFZZ	80204	B1821BH050C200N	SCREW, CAP, HEXAGON H 1/2-13 X 2 UOC: LWB, LWC, LWD,	2
4	PAFZZ	96906	MS51525A12	ADAPTER, STRAIGHT, TU UOC: LWB, LWC, LWD,	2
5	PAFZZ	96906	MS28778-12	.O-RING UOC: LWB, LWC, LWD,	1
6	PAOZZ	19207	12414699-001	HOSE ASSEMBLY, NONME UOC: LWB, LWC, LWD,	1
7	PAFZZ	96906	MS51527A20	ELBOW, TUBE TO BOSS UOC: LWB, LWC, LWD,	1
8	PAFZZ	96906	MS28778-20	.O-RING UOC: LWB, LWC, LWD,	1
9	PAOZZ	19207	12417312	HOSE ASSEMBLY, NONME UOC: LWB, LWC, LWD,	1
10	PAOZZ	1FH08	DIN555M8	NUT, PLAIN, HEXAGON M8 X 1.25 UOC: LWB, LWC, LWD,	4
11	PAOZZ	34914	990 3861	WASHER, FLAT M8.4 UOC: LWB, LWC, LWD,	4
12	PFOZZ	19207	12418481	BRACKET, ANGLE UOC: LWB, LWC, LWD,	2
13	PAOZZ	80204	B1821BH025C050N	SCREW, CAP, HEXAGON H 1/4-20 X 1/2 UOC: LWB, LWC, LWD,	4
14	PAOZZ	15526	933-M8X20	SCREW, CAP, HEXAGON H M8 X 1.25 X 20 UOC: LWB, LWC, LWD,	4
15	PAOZZ	09990	60095-11	VALVE, LINEAR, DIRECT UOC: LWB, LWC, LWD,	1
16	PAOZZ	81343	8-10 070120C	ADAPTER, STRAIGHT, TU UOC: LWB, LWC, LWD,	2
17	PAOZZ	96906	MS28778-10	.O-RING UOC: LWB, LWC, LWD,	1
18	PAOZZ	19207	12414698-002	HOSE ASSEMBLY, NONME UOC: LWB, LWC, LWD,	1
19	PAOZZ	19207	12414698-001	HOSE ASSEMBLY, NONME UOC: LWB, LWC, LWD,	1
20	PAOZZ	81343	10-10 070120CA	ADAPTER, STRAIGHT, TU UOC: LWB, LWC, LWD,	2
21	PAOZZ	96906	MS28778-10	.O-RING UOC: LWB, LWC, LWD,	1

(1) ITEM NO	(2) SMR CODE	(3) FSCM	(4) PART NUMBER	(5) DESCRIPTION AND USABLE ON CODE (UOC)	(6) QTY
22	PAOZZ	0FW39	12419043	HOSE ASSEMBLY, NONME UOC: LWB, LWC, LWD,	1
23	PAOZZ	19207	12417313-002	HOSE ASSEMBLY, NONME UOC: LWB, LWC, LWD,	1
24	PAOZZ	96906	MS39324-12-10	ADPATER, STRAIGHT, TU UOC: LWB, LWC, LWD,	1
25	PAOZZ	96906	MS28778-10	.O-RING UOC: LWB, LWC, LWD,	1
26	PAOZZ	19207	12414315-006	NUT, SELF-LOCKING, HE M8 X 1.25 UOC: LWB, LWC, LWD,	1
27	PAOZZ	19207	12420361	BRACKET, ANGLE UOC: LWB, LWC, LWD,	1
28	PAOZZ	0TE27	5320/320PPH	CLAMP, HOSE UOC: LWB, LWC, LWD,	1
29	PAOZZ	0TE27	CPT5	PLATE, MOUNTING UOC: LWB, LWC, LWD,	1
30	PAOZZ	6V370	0636010109	SCREW, CAP, HEXAGON H M8 X 1.25 X 80 UOC: LWB, LWC, LWD,	1
31	PAOZZ	19207	12414308-018	NUT, SELF-LOCKING, HE M8 X 1.25 UOC: LWB, LWC, LWD,	1
32	PAOZZ	96906	MS51527A8	ELBOW, TUBE TO BOSS UOC: LWB, LWC, LWD,	2
33	PAOZZ	96906	MS28778-8	.O-RING UOC: LWB, LWC, LWD,	1
34	PAOZZ	19207	12414309-034	SCREW, CAP, HEXAGON H M8 X 1.25 X 65 UOC: LWB, LWC, LWD,	1
35	PAOZZ	0TE27	CPT3	STRAP, RETAINING UOC: LWB, LWC, LWD,	1
36	PAOZZ	0TE27	3222/222PPH	CLAMP, BLOCK UOC: LWB, LWC, LWD,	1
37	PAOZZ	19207	12417311	HOSE ASSEMBLY, NONME UOC: LWB, LWC, LWD,	1
38	PAOZZ	01276	2062-12-20S	ELBOW, TUBE TO BOSS UOC: LWB, LWC, LWD,	1
39	PAOZZ	96906	MS28778-20	.O-RING UOC: LWB, LWC, LWD,	1
40	PAOZZ	81343	20-20 070320C	ELBOW, TUBE TO BOSS UOC: LWB, LWC, LWD,	1
41	PAOZZ	96906	MS28778-20	.O-RING UOC: LWB, LWC, LWD,	1
42	PAOZZ	19207	12419810	ELBOW, PIPE UOC: LWB, LWC, LWD,	1
43	PAOZZ	81349	M18940/2-1	VALVE, BLEEDER, HYDRA UOC: LWB, LWC, LWD,	1
44	PAOZZ	19207	12419042	HOSE ASSEMBLY, NONME UOC: LWB, LWC, LWD,	1
45	PAOZZ	96906	MS51860-58	LOCKNUT, TUBE FITTIN UOC: LWB, LWC, LWD,	1

(1) ITEM NO	(2) SMR CODE	(3) FSCM	(4) PART NUMBER	(5) DESCRIPTION AND USABLE ON CODE (UOC)	(6) QTY
46	PAOZZ	19207	12418070	BRACKET, ANGLE UOC: LWB, LWC, LWD,	1
47	PAOZZ	19207	12414307-016	BOLT, MACHINE M6X1X35 UOC: LWB, LWC, LWD,	2
48	PAOZZ	19207	12417975-006	SPACER, RING 5.3ID X 15 OD, 5MM THD DIA UOC: LWB, LWC, LWD,	4
49	PAOZZ	96906	MS51516A12S	TEE, TUBE UOC: LWB, LWC, LWD,	1
50	PAOZZ	56161	10503805	SCREW, CAP, HEXAGON H M6 X 1 X 20 UOC: LWB, LWC, LWD,	1
51	PAOZZ	19207	12414314-004	WASHER, FLAT UOC: LWB, LWC, LWD,	2
52	PAOZZ	18076	S463H-56	CLAMP, LOOP UOC: LWB, LWC, LWD,	1
53	PAOZZ	18076	S630H-32	CLAMP, LOOP, HVY DUTY UOC: LWB, LWC, LWD,	1
54	PAOZZ	19207	12414308-002	NUT, SELF-LOCKING, EX M6 X 1 UOC: LWB, LWC, LWD,	3

END OF FIGURE

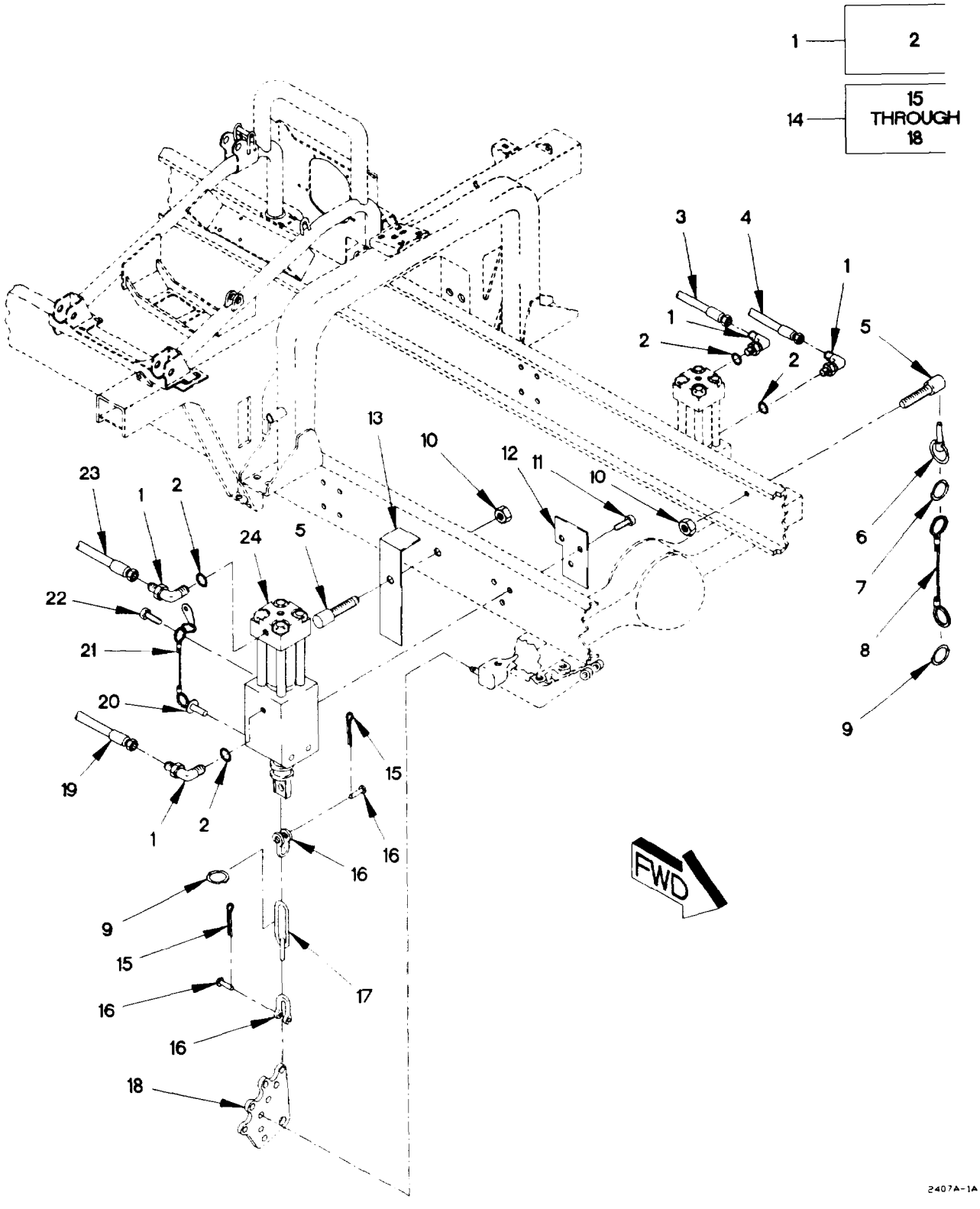

Figure 253. Suspension Cylinder, Hoses, and Fittings

(1) ITEM NO	(2) SMR CODE	(3) FSCM	(4) PART NUMBER	(5) DESCRIPTION AND USABLE ON CODE (UOC)	(6) QTY
				GROUP 2407: HYDRAULIC CYLINDERS	
				FIG. 253 SUSPENSION CYLINDER, HOSES AND FITTINGS	
1	PAOZZ	96906	MS51527A4Z	ELBOW, TUBE TO BOSS	4
2	PAOZZ	96906	MS28778-4	.O-RING	1
3	PAOZZ	19207	12420745-002	HOSE ASSEMBLY, NONME MAKE FROM 2766-X (01276), 60 IN	1
4	PAOZZ	19207	12420745-001	HOSE ASSEMBLY, NONME MAKE FROM 2766-X (01276), 57 IN	1
5	PAOZZ	19207	12417929	SCREW, MACHINE M12 X 1.5 X 43	2
5	PAOZZ	19207	12417929-001	SCREW, MACHINE M12 X 1.5 X 24	1
6	PAOZZ	0FW39	12417930	PIN, QUICK RELEASE	2
7	PAOZZ	84256	13-4CD	RING, RETAINING	2
8	PAOZZ	84256	50996-8W	WIRE ROPE ASSEMBLY MAKE FROM WIRE P/N: M83420/4-005 (81349) X 16MM	1
9	PAOZZ	84256	19-9CD	RING, RETAINING	2
10	PAOZZ	19207	12414308-021	NUT, SELF-LOCKING, EX M12 X 1.5	2
11	PAOZZ	80204	B18231B16030N	SCREW, CAP, HEXAGON H M16 X 2 X 30	6
12	PAOZZ	19207	12421158	SPACER, PLATE	2
13	PAOZZ	19207	12420750	BRACKET, ANGLE	1
14	PAOZZ	19207	12421180	CHAIN ASSEMBLY, SING	2
15	PAOZZ	96906	MS24665-385	.PIN, COTTER	2
16	PAOZZ	75535	1018892	.SHACKLE	2
17	PAOZZ	19207	12421195	.CHAIN, WELDED	1
18	PAOZZ	19207	12421196	.PLATE, MOUNTING	1
19	PAOZZ	19207	12420745-003	HOSE ASSEMBLY, NONME MAKE FROM 2766-X (01276), 54 IN	1
20	PAOZZ	96906	MS17984C735	PIN, QUICK RELEASE	4
21	PAOZZ	0FW39	12420196-003	LANYARD ASSEMBLY	4
22	PAOZZ	19207	12414419-089	SCREW, CAP, HEXAGON H M8 X 1.25 X 10	2
23	PAOZZ	19207	12420745-004	HOSE ASSEMBLY, NONME MAKE FROM 2766-X (01276), 54 IN	1
24	PAOZZ	19207	12420793	CYLINDER ASSEMBLY, A	2
				END OF FIGURE	

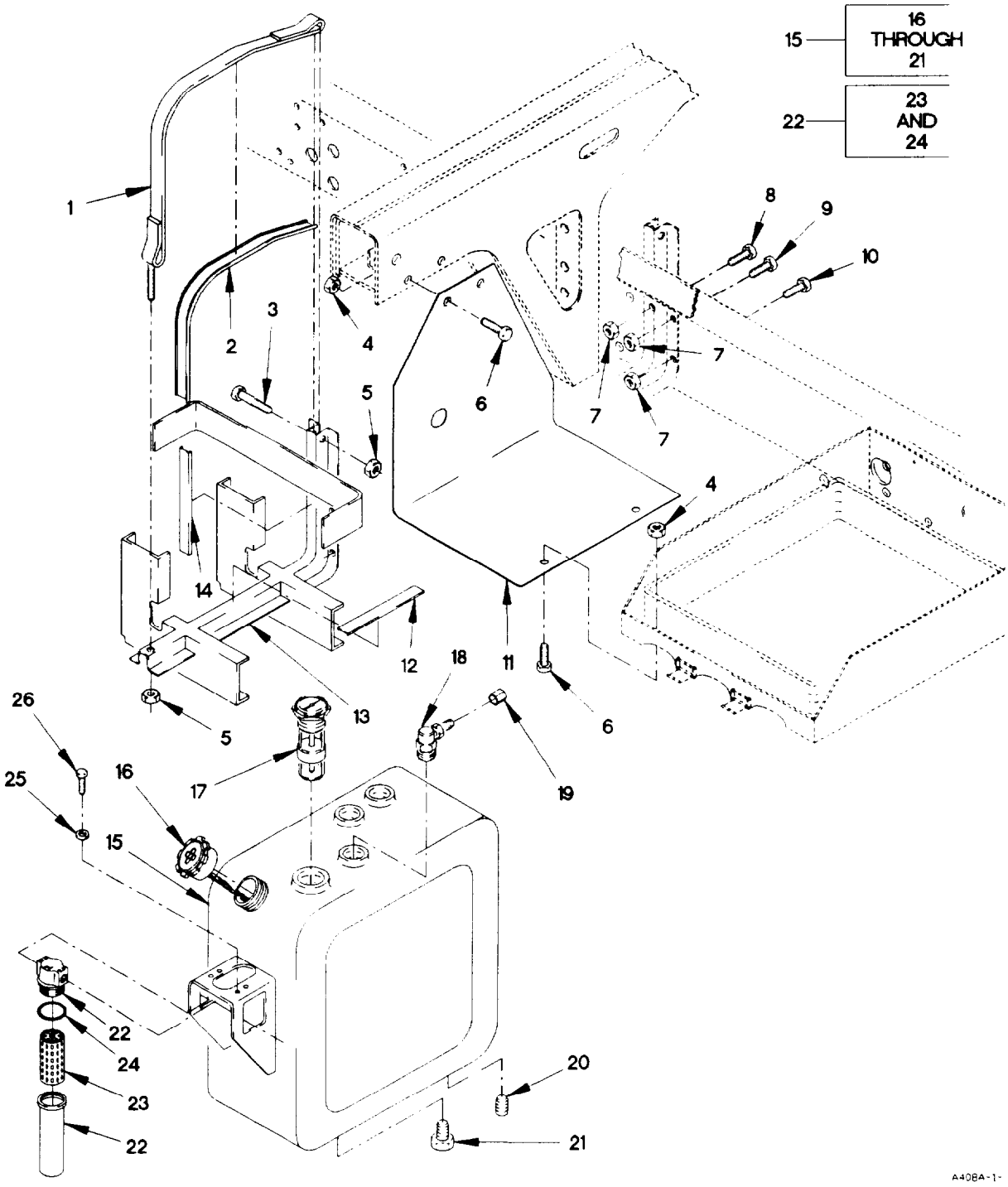

Figure 254. Hydraulic Reservior and Filter

(1) ITEM NO	(2) SMR CODE	(3) FSCM	(4) PART NUMBER	(5) DESCRIPTION AND USABLE ON CODE (UOC)	(6) QTY
				GROUP 2408: LIQUID TANKS OR RESERVOIRS FIG. 254 HYDRAULIC RESERVOIR AND FILTER	
1	PAOZZ	98624	SS5811	STRAP, RETAINING UOC: LWB, LWC, LWD,	1
2	PAOZZ	0FW39	12414579-001	WEBBING, TEXTILE UOC: LWB, LWC, LWD,	1
3	PAOZZ	19207	12414307-069	BOLT, MACHINE M10 X 1.5 X 55 UOC: LWB, LWC, LWD,	1
4	PAOZZ	19207	12414308-017	NUT, SELF-LOCKING, EX M8 X 1 UOC: LWB, LWC, LWD,	4
5	PAOZZ	19207	12414308-019	NUT, SELF-LOCKING, EX M10 X 1.5 UOC: LWB, LWC, LWD,	2
6	PAOZZ	19207	12414307-023	BOLT, MACHINE M8 X 1 X 20 UOC: LWB, LWC, LWD,	4
7	PAOZZ	19207	12414308-025	NUT, SELF-LOCKING, EX M16 X 1.5 UOC: LWB, LWC, LWD,	4
8	PAOZZ	19207	12414307-138	BOLT, MACHINE M16 X 1.5 X 35 UOC: LWB, LWC, LWD,	2
9	PAOZZ	19207	12414307-149	BOLT, MACHINE M16 X 1.5 X 110 UOC: LWB, LWC, LWD,	1
10	PAOZZ	19207	12414307-140	BOLT, MACHINE M16 X 1.5 X 45 UOC: LWB, LWC, LWD,	1
11	PAOZZ	19207	12417347	GUARD, DIESEL ENGINE UOC: LWB, LWC, LWD,	1
12	MOOZZ	19207	12414669-003X378	INSULATOR, TANK MAKE FROM INSULATOR P/N 12414669-002 (0VXY8) X 378 MM LONG UOC: LWB, LWC, LWD,	1
13	PAOZZ	98624	SS5809	BRACKET, VEHICULAR C UOC: LWB, LWC, LWD,	1
14	MOOZZ	98624	12414669-004X241	INSULATOR, TANK MAKE FROM INSULATOR P/N: 12414669-002 (0VXY8) X 241 MM LONG UOC: LWB, LWC, LWD,	1
15	PAOZZ	98624	SS5766REVE	RESERVOIR, HYDRAULIC UOC: LWB, LWC, LWD,	1
16	PAOZZ	51377	A1349S	.CAP, FILLER OPENING UOC: LWB, LWC, LWD,	1
17	PAOZZ	0FW39	12418142	.INDICATOR, LIQUID QU UOC: LWB, LWC, LWD,	1
18	PAOZZ	51377	A1386H	.VALVE, VENT UOC: LWB, LWC, LWD,	1
19	PAOZZ	51377	A1390A	.CAP, FILLER OPENING UOC: LWB, LWC, LWD,	1
20	PAOZZ	96906	MS27769C5	.PLUG, PIPE UOC: LWB, LWC, LWD,	1

(1) ITEM NO	(2) SMR CODE	(3) FSCM	(4) PART NUMBER	(5) DESCRIPTION AND USABLE ON CODE (UOC)	(6) QTY
21	PAOZZ	79470	3152X8	.PLUG, PIPE UOC: LWB, LWC, LWD,	1
22	PAOOO	05779	N3-15CN-2-10B-15 158	FILTER, FLUID UOC: LWB, LWC, LWD,	1
23	PAOZZ	05779	931558	.FILTER ELEMENT, FLUI UOC: LWB, LWC, LWD,	1
24	PAOZZ	05779	N72143	.SEAL, PLAIN UOC: LWB, LWC, LWD,	1
25	PAOZZ	19200	12524631-1	WASHER, FLAT M6 UOC: LWB, LWC, LWD,	4
26	PAOZZ	80204	B1821BH025C050N	SCREW, CAP, HEXAGON H 1/4-20 X 1/2 UOC: LWB, LWC, LWD,	4

END OF FIGURE

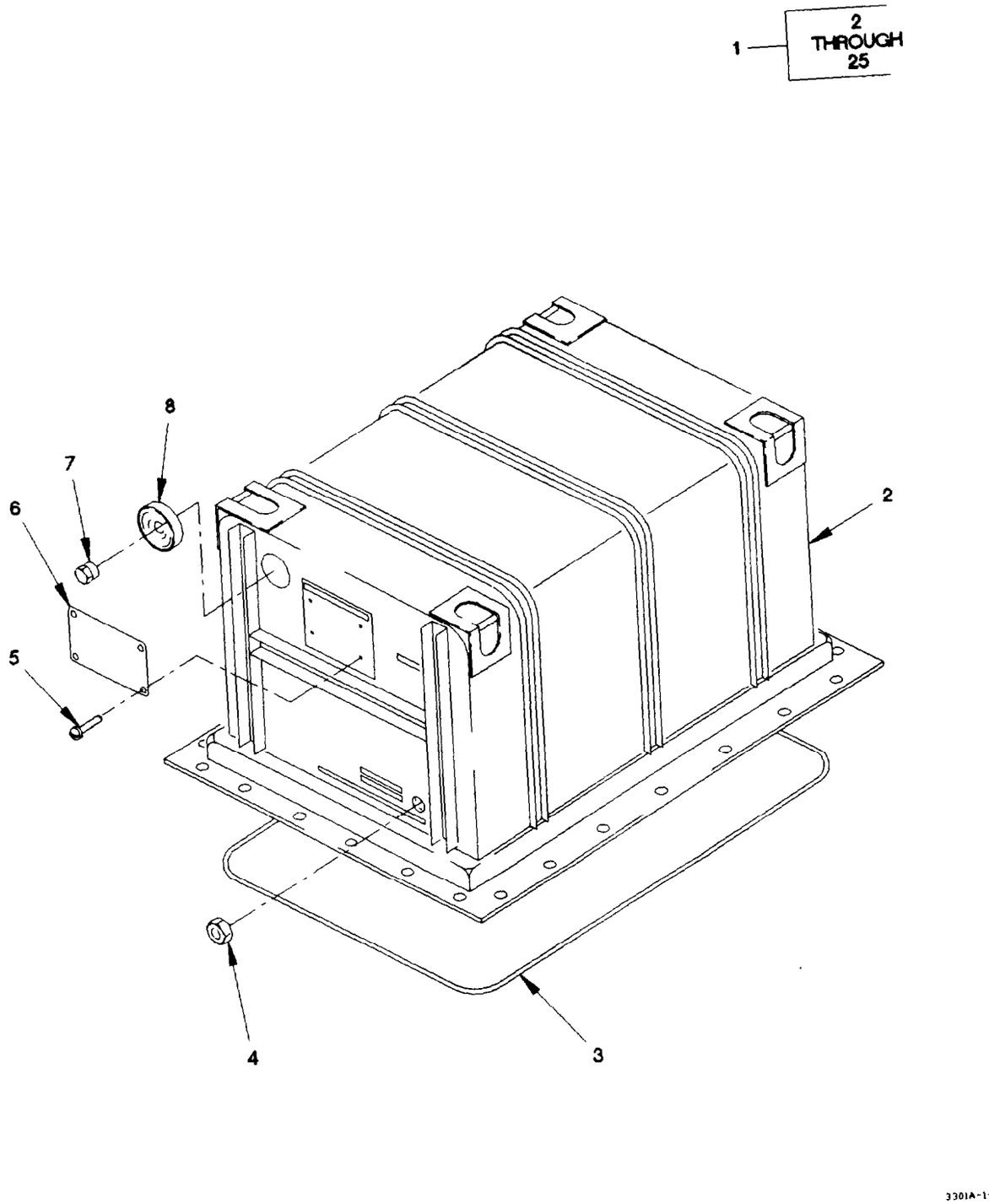

Figure 255. Engine Container (Sheet 1 of 2)

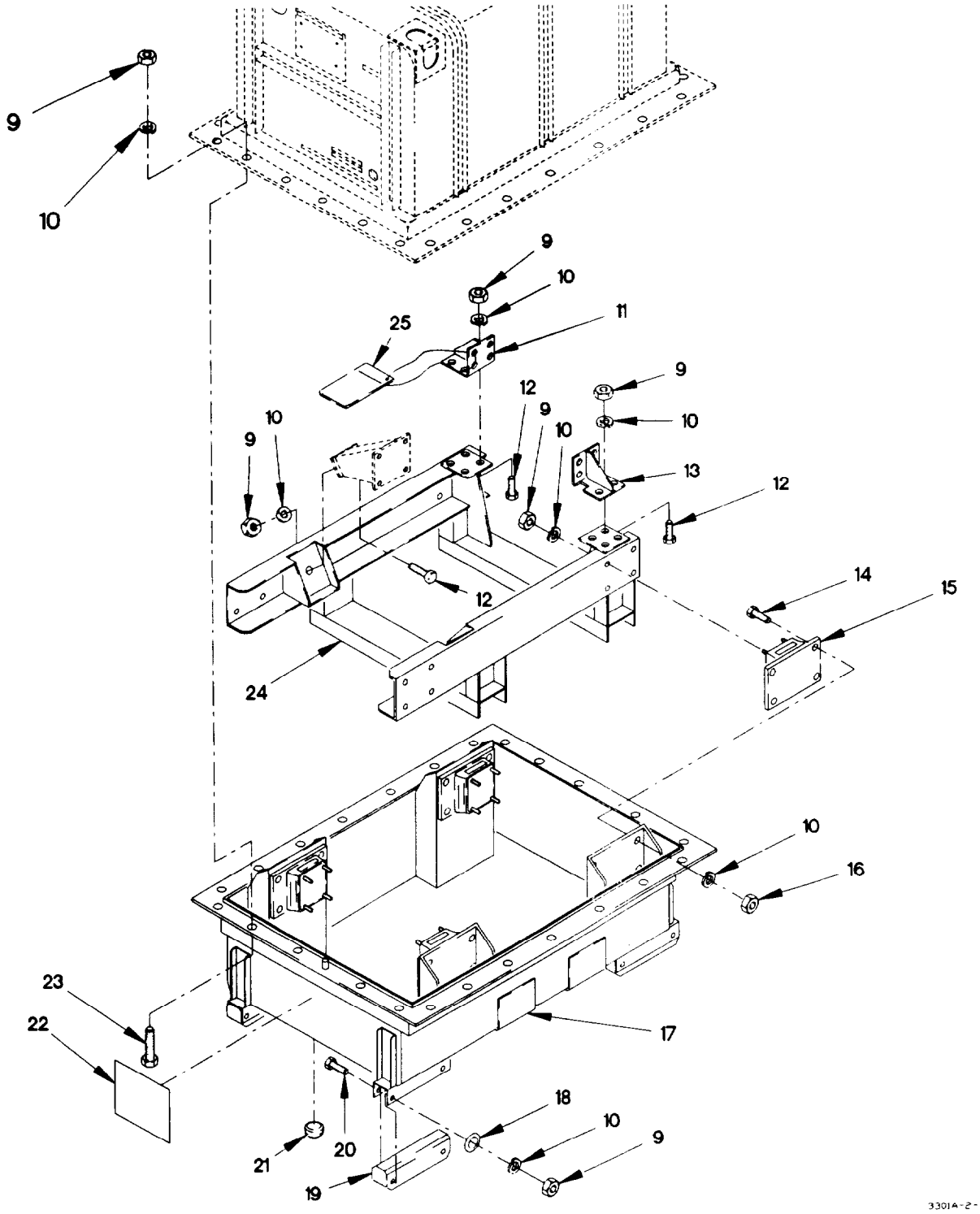

Figure 255. Engine Container (Sheet 2 of 2)

(1) ITEM NO	(2) SMR CODE	(3) FSCM	(4) PART NUMBER	(5) DESCRIPTION AND USABLE ON CODE (UOC)	(6) QTY
				GROUP 3301: REUSABLE SHIPPING CONTAINERS	
				FIG. 255 ENGINE CONTAINER	
1	PAFFF	19207	12414397	SHIPPING AND STORAG	1
2	XAFFF	0FW39	12420026	.CRATE, SHIPPING	1
3	PAFZZ	19207	12420037	.RUBBER ROUND SECTIO	1
4	PAFZZ	10001	1404491	.INDICATOR, HUMIDITY,	1
5	PAFZZ	96906	MS21318-48	.SCREW, DRIVE	4
6	PAFZZ	19207	7973326	.PLATE, IDENTIFICATIO	1
7	PAFZZ	08992	TA330-10-10-R	.VALVE, PRESSURE EQUA	1
8	PAFZZ	19207	12338078	.BREATHER	1
9	PAFZZ	96906	MS51967-14	.NUT, PLAIN, HEXAGON 1/2-13	58
10	PAFZZ	96906	MS35338-48	.WASHER, LOCK 1/2	58
11	PFFZZ	19207	12420030	.BRACKET, ANGLE	1
12	PAFZZ	96906	MS90725-113	.SCREW, CAP, HEXAGON H 1/2-13 X 1 1/2	10
13	PFFZZ	19207	12420031	.BRACKET, ANGLE	1
14	PAFZZ	80204	B1821BH050C125N	.SCREW, CAP, HEXAGON H 1/2-13 X 1 1/4	16
15	PAFZZ	19207	12420032	.MOUNT, RESILIENT	4
16	PAFZZ	96906	MS51968-14	.NUT, PLAIN, HEXAGON 1/2-20	16
17	PFFZZ	19207	12420027	.SHIPPING AND STORAG	1
18	PAFZZ	96906	MS27183-18	.WASHER, FLAT 17/32	8
19	MFFZZ	19207	12420036	.SKID MAKE FROM WOOD MIL-STD-736 GRP IV 4" X 4"	4
20	PAFZZ	80204	B1821BH050C500N	.SCREW, CAP, HEXAGON H 1/2-13 X 5	8
21	PAFZZ	96906	MS20913-6S	.PLUG, PIPE	1
22	PAFZZ	19207	12420033	.MARKER, IDENTIFICATI	1
23	PAFZZ	80204	B1821BH050C175N	.SCREW, CAP, HEXAGON H 1/2-13 X 1 3/4	24
24	PFFZZ	19207	12420028	.FRAME SECTION, STRUC	1
25	PAFZZ	19207	10890481	.BAG, MAIL	1
				END OF FIGURE	

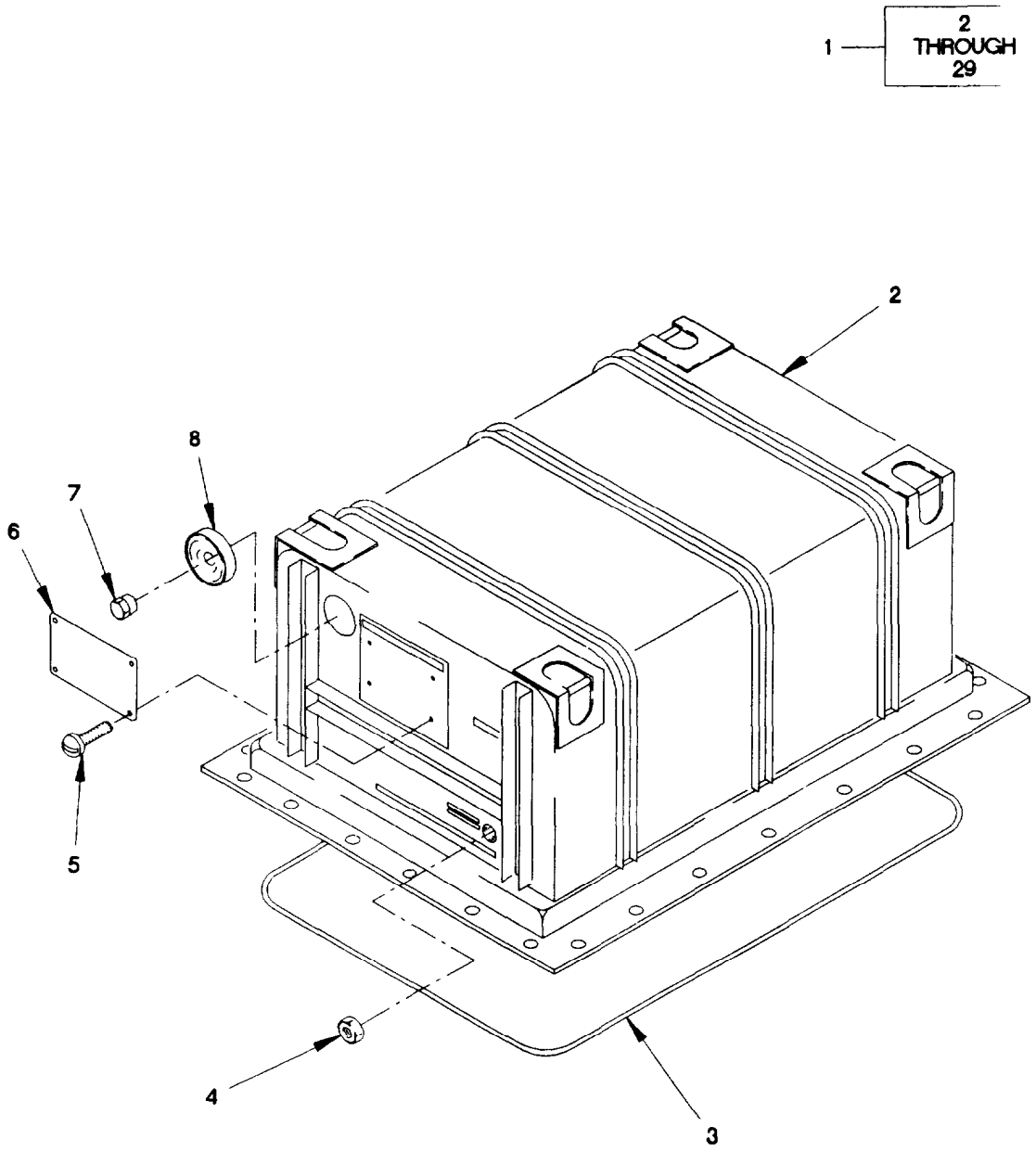

Figure 256. Transmission Container (Sheet 1 of 2)

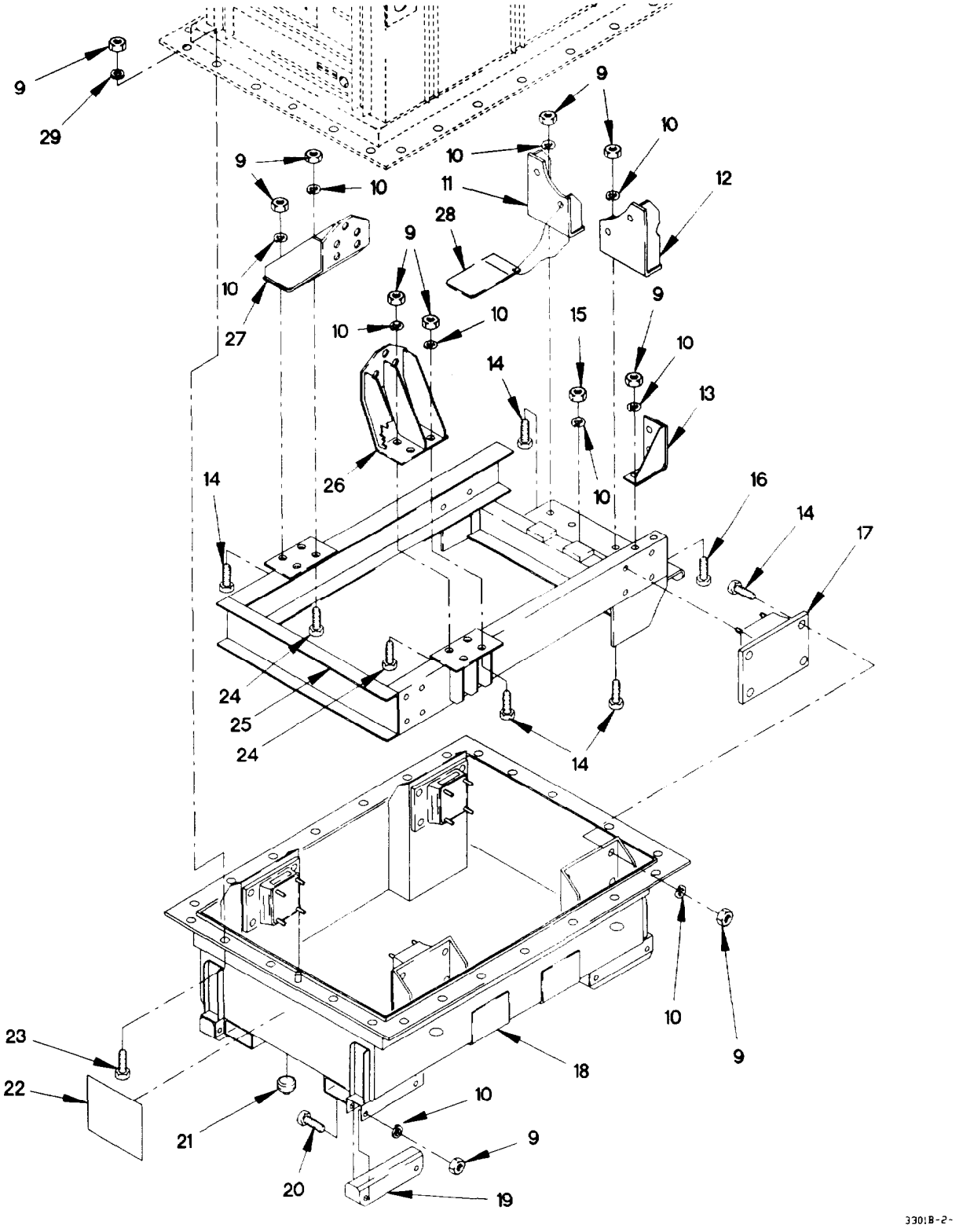

Figure 256. Transmission Container (Sheet 2 of 2)

(1) ITEM NO	(2) SMR CODE	(3) FSCM	(4) PART NUMBER	(5) DESCRIPTION AND USABLE ON CODE (UOC)	(6) QTY
				GROUP 3301: REUSABLE SHIPPING CONTAINERS	
				FIG. 256 TRANSMISSION CONTAINER	
1	PAFFF	19207	12414256	SHIPPING AND STORAG	1
2	PFFZZ	0FW39	12420042	.SHIPPING AND STORAG	1
3	PAFZZ	19207	12420056	.RUBBER ROUND SECTIO	1
4	PAFZZ	10001	1404491	.INDICATOR, HUMIDITY,	1
5	PAFZZ	96906	MS21318-48	.SCREW, DRIVE	4
6	PAFZZ	19207	7973325	.PLATE, IDENTIFICATIO	1
7	PAFZZ	08992	TA330-10-10-R	.VALVE, PRESSURE EQUA	1
8	PAFZZ	19207	12338078	.BREATHER	1
9	PAFZZ	96906	MS51967-14	.NUT, PLAIN, HEXAGON 1/2-13	60
10	PAFZZ	96906	MS35338-48	.WASHER, LOCK 1/2	52
11	PFFZZ	19207	12420048	.BRACKET, MOUNTING	1
12	PFFZZ	19207	12420049	.BRACKET, MOUNTING	1
13	PFFZZ	19207	12420047	.BRACKET, ANGLE	1
14	PAFZZ	80204	B1821BH050C125N	.SCREW, CAP, HEXAGON H 1/2-13 X 1 1/4	28
15	PAFZZ	96906	MS51968-14	.NUT, PLAIN, HEXAGON 1/2-20	16
16	PAFZZ	96906	MS90725-113	.SCREW, CAP, HEXAGON H 1/2-13 X 1 1/2	2
17	PAFZZ	19207	12420032	.MOUNT, RESILIENT	4
18	PAFZZ	0FW39	12420043	.SHIPPING AND STORAG	1
19	MFFZZ	19207	12420036	.SKID MAKE FROM WOOD MIL-STD-736 GRP IV 4" X 4"	4
20	PAFZZ	80204	B1821BH050C500N	.SCREW, CAP, HEXAGON H 1/2-13 X 5	8
21	PAFZZ	96906	MS20913-6S	.PLUG, PIPE	1
22	PAFZZ	19207	12420050	.MARKER, IDENTIFICATI	1
23	PAFZZ	80204	B1821BH050C175N	.SCREW, CAP, HEXAGON H 1/2-13 X 1 3/4	26
24	PAFZZ	80204	B1821BH050C200N	.SCREW, CAP, HEXAGON H 1/2-13 X 2	4
25	PFFZZ	19207	12420044	.FRAME SECTION, STRUC	1
26	PFFZZ	19207	12420045	.BRACKET, MOUNTING	1
27	PFFZZ	19207	12420046	.BRACKET, MOUNTING	1
28	PAFZZ	19207	10890481	.BAG, MAIL	1
29	PAFZZ	96906	MS27183-48	.WASHER, FLAT 1/4	26
				END OF FIGURE	

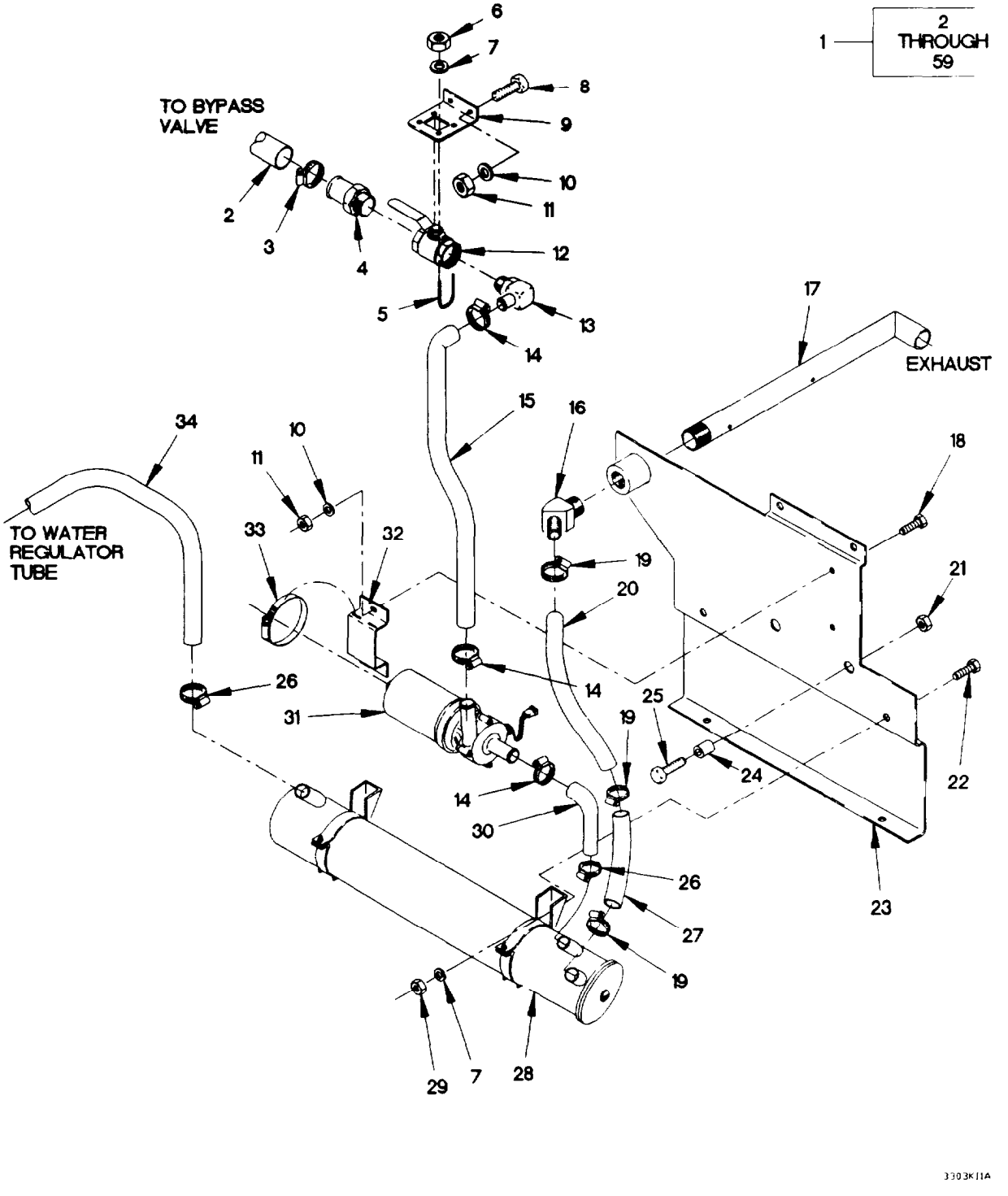

Figure 257. Arctic Swing Fire Kit (Sheet 1 of 3)

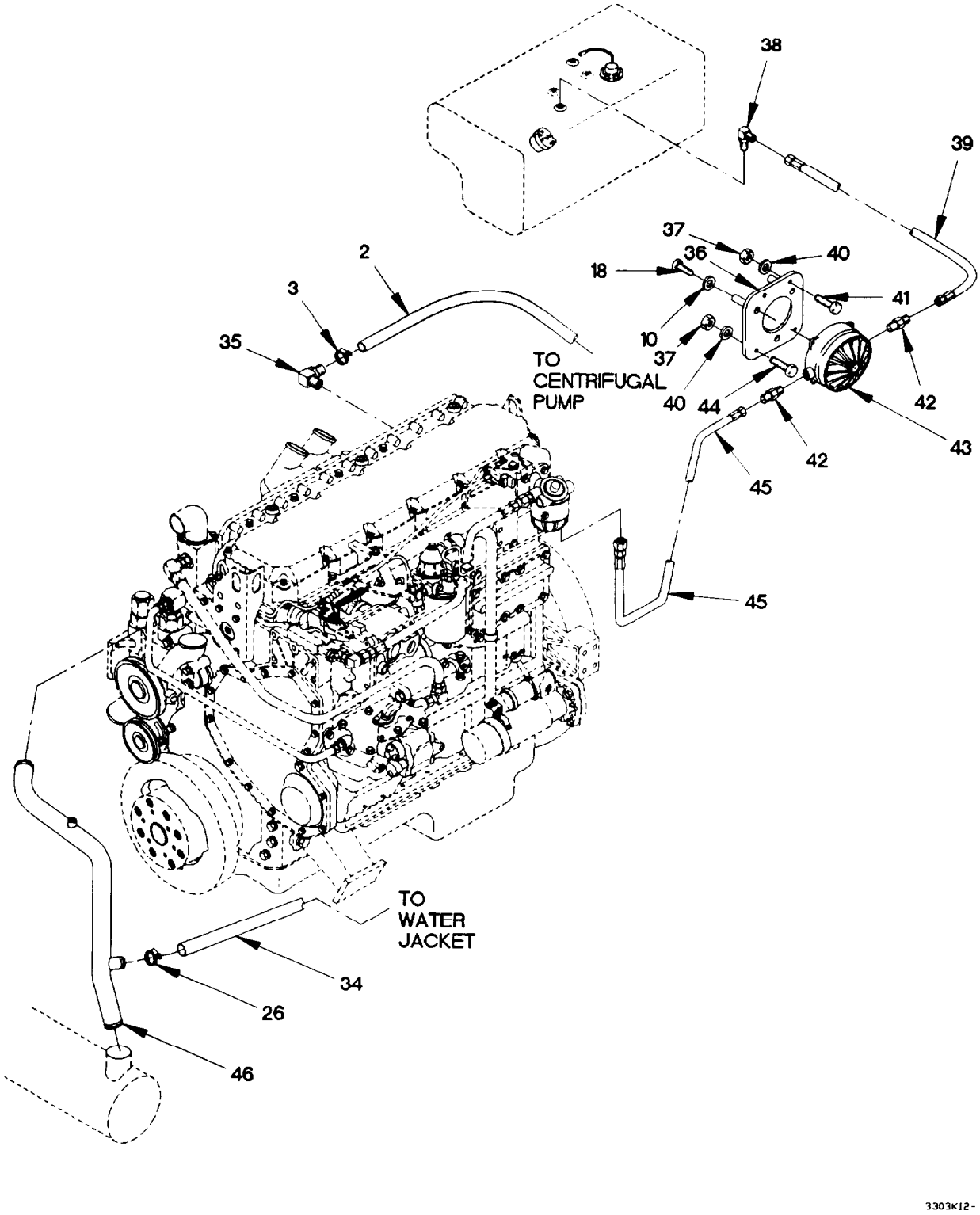

Figure 257. Arctic Swing Fire Kit (Sheet 2 of 3)

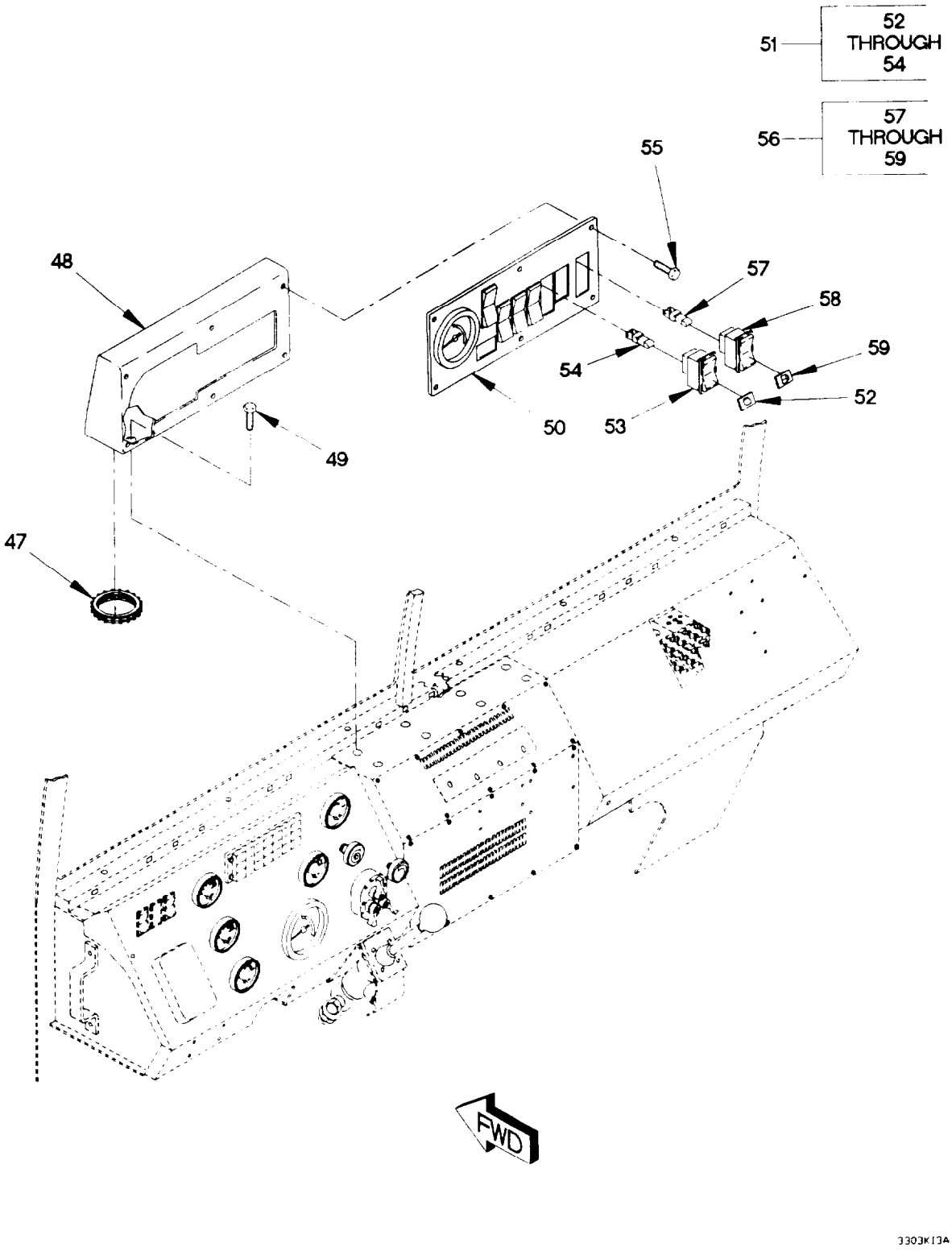

Figure 257. Arctic Swing Fire Kit (Sheet 3 of 3)

(1) ITEM NO	(2) SMR CODE	(3) FSCM	(4) PART NUMBER	(5) DESCRIPTION AND USABLE ON CODE (UOC)	(6) QTY
				GROUP 3303: WINTERIZATION KITS FIG. 257 ARCTIC SWING FIRE KIT	
1	PDOZZ	19207	57K1218	WINTERIZATION KIT, V	1
2	MOOZZ	81349	M62217/1-12-66	.HOSE, NONMETALLIC MAKE FROM HOSE P/N: M62217/1-12-BULKLG (81349) X 66IN	1
3	PAOZZ	7Z588	9408	.CLAMP, HOSE	2
4	PAOZZ	81343	12-16 430160C	.ADAPTER, STRAIGHT, PI	1
5	PAOZZ	80205	NAS3106-15-14	.BOLT, U	2
6	PAOZZ	96906	MS21083N6	.NUT, SELF-LOCKING, HE 3/8-24	4
7	PAOZZ	19207	12414473-014	.WASHER, FLAT M10	6
8	PAOZZ	19207	12414307-069	.BOLT, MACHINE M10 X 1.5 X 55	2
9	PAOZZ	19207	12420434	.BRACKET, ANGLE	1
10	PAOZZ	34914	990 3861	.WASHER, FLAT M8.4	5
11	PAOZZ	19207	12414308-004	.NUT, SELF-LOCKING, HEX M8 X 1.25	2
12	PAOZZ	93061	V50SS-16	.VALVE, BALL	1
13	PAOZZ	19207	12421370	.ELBOW, TUBE	1
14	PAOZZ	7Z588	CT 250L	.CLAMP, HOSE	3
15	MOOZZ	81349	M62217/1-24-15	.HOSE, NONMETALLIC MAKE FROM HOSE (81349) M62217/1-24X15 KLG X 15 IN	1
16	PAOZZ	81343	12-12 430360CA	.ELBOW, PIPE TO HOSE	1
17	PAOZZ	19207	12420350	.PIPE, EXHAUST	1
18	PAOZZ	15526	933-M8X20	.SCREW, CAP, HEXAGON H M8 X 1.25 X 20	6
19	PAOZZ	7Z588	9410	.CLAMP, HOSE 1 1/16	3
20	PAOZZ	81349	M6202823121715	.HOSE, AIR DUCT	1
21	PAOZZ	19207	12414308-005	.NUT, SELF-LOCKING, EX M10 X 1.5	4
22	PAOZZ	15526	DIN933-M10X20-8.8-A4C	.BOLT, MACHINE M10 X 1.5 X 20	2
23	PAOZZ	19207	12420349	.PLATE, MOUNTING, ROLL	1
24	PAOZZ	19207	12417700	.BEARING, SLEEVE	2
25	PAOZZ	11862	14028922	.BOLT, MACHINE M10X1.5X65	2
26	PAOZZ	7Z588	9420	.CLAMP, HOSE	3
27	PAOZZ	19207	12420491	.ELBOW, TUBE	1
28	PAOZZ	16236	269013000000	.WATER JACKET ASSEMB	1
29	PAOZZ	19207	12414474-015	.NUT, PLAIN, HEXAGON M10 X 1.5	2
30	PAOZZ	19207	12419152	.HOSE, PREFORMED	1
31	PAOZZ	62380	458392	.PUMP UNIT, CENTRIFUG	1
32	PAOZZ	19207	12419146	.BRACKET, MOUNTING	1
33	PAOZZ	96906	MS35842-14	.CLAMP, HOSE	2
34	MOOZZ	81349	M62217/1-16-80	.HOSE, NONMETALLIC MAKE FROM HOSE P/N: M62217/1-16BULK (81349) X 80IN	1
35	PAOZZ	81343	12-12 430220C	.ELBOW, HOSE TO BOSS	1
36	PAOZZ	19207	12417696	.BRACKET, VEHICULAR C	1
37	PAOZZ	19207	12414308-002	.NUT, SELF-LOCKING, EX M6 X 1	4
38	PAOZZ	81343	6-10 07202C	.ELBOW, PIPE TO TUBE	1

(1) ITEM NO	(2) SMR CODE	(3) FSCM	(4) PART NUMBER	(5) DESCRIPTION AND USABLE ON CODE (UOC)	(6) QTY
39	PAOZZ	19207	12418124-003	.HOSE, NON-METALLIC	1
40	PAOZZ	19200	12524631-1	.WASHER, FLAT M6	4
41	PAOZZ	56161	10503805	.SCREW, CAP, HEXAGON H M6 X 1 X 20	2
42	PAOZZ	81343	6-10 070120CA	.ADAPTER, STRAIGHT, TU	2
43	PAOZZ	55752	14339	.HEATER, COOLANT, ENGI	1
44	PAOZZ	19207	12414309-022	.SCREW, CAP, HEXAGON H M6 X 1.0 X 35	2
45	PAOZZ	0FW39	12418124-004	.HOSE, NONMETALLIC	1
46	PAOZZ	19207	12417937-004	.TUBE, BENT, METALLIC	1
47	PAOZZ	96906	MS21266-2N	.GROMMET, NONMETALLIC	1
48	PAOZZ	19207	12378453	.HOUSING, PANEL, VEHIC	1
49	PAOZZ	19207	12414419-054	.SCREW, CAP, HEXAGON H M5 X .8 X 6	8
50	PAOZZ	19207	12378452	.PANEL, VEHICULAR OPE	1
51	AOOOO	82484	E-003-028	.SWITCH ASSY, ENGINE PREHEAT	1
52	PAOZZ	82484	59L-292	. .INSERT, LEGEND, LIGHT	1
53	PAOZZ	19207	12378620-002	. .SWITCH, TOGGLE	1
54	PAOZZ	82484	E-013-002	. .LAMP UNIT, VEHICULAR	1
55	PAOZZ	19207	12414419-039	.SCREW, CAP, HEXAGON H M4 X .7 X 8	6
56	AOOOO	82484	E-003-019	.SWITCH ASSY	1
57	PAOZZ	82484	E-013-001	. .LIGHT, INDICATOR	1
58	PAOZZ	19207	12378620-002	. .SWITCH, TOGGLE	1
59	PAOZZ	82484	59L.414	. .SWITCH, LIQUID LEVEL	1

END OF FIGURE

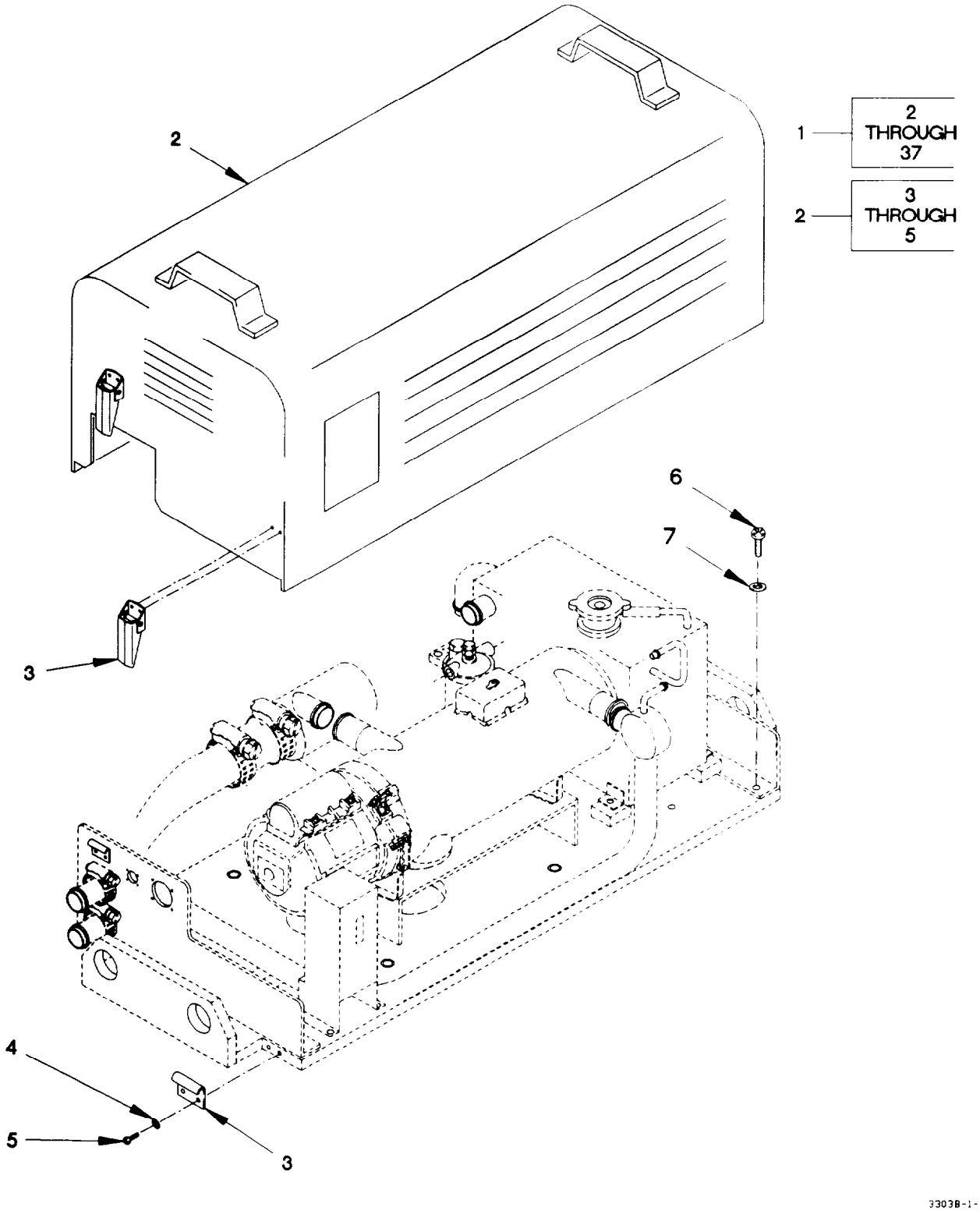

Figure 258. Cargo Furnace Assembly (Sheet 1 of 3)

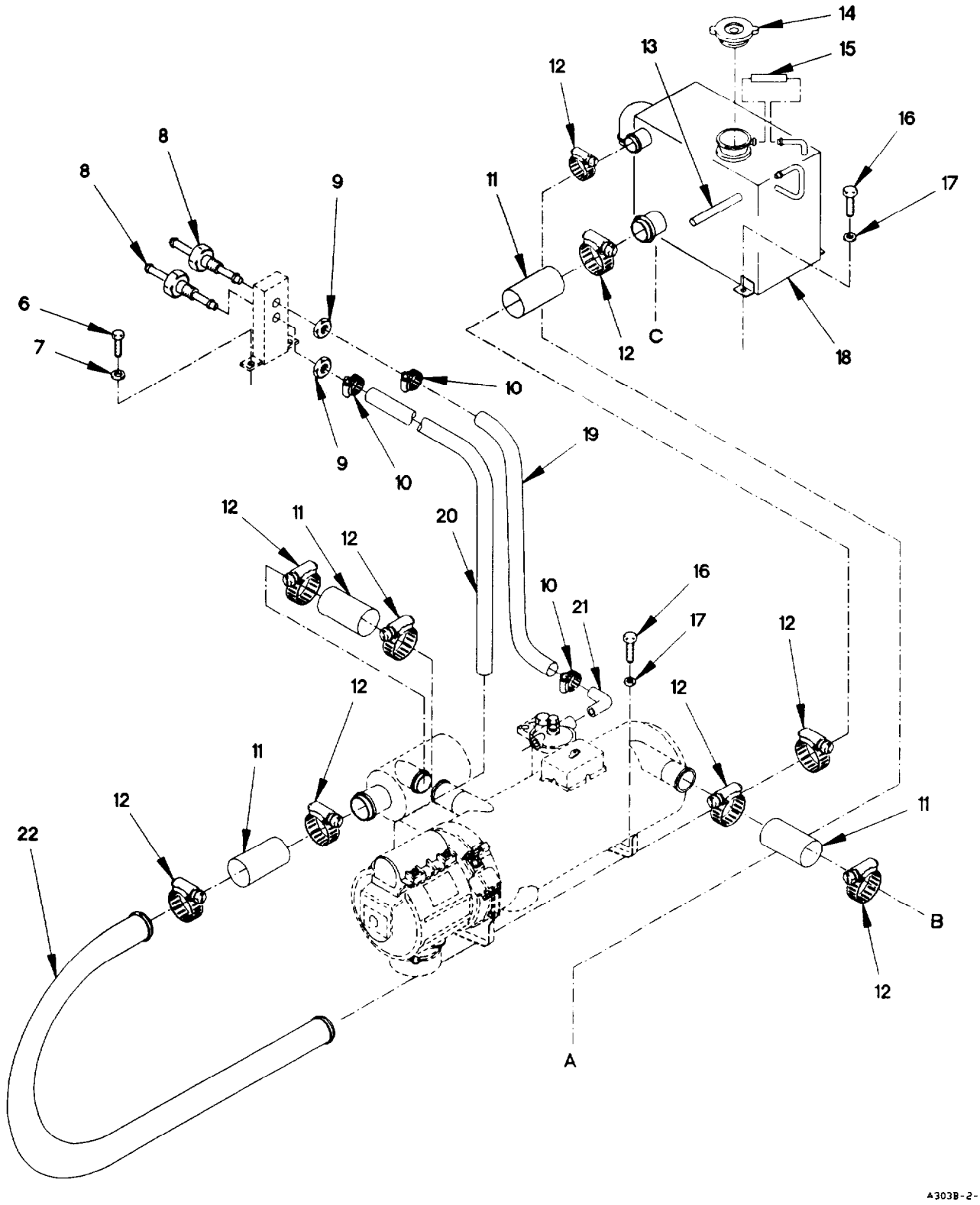

Figure 258. Cargo Furnace Assembly (Sheet 2 of 3)

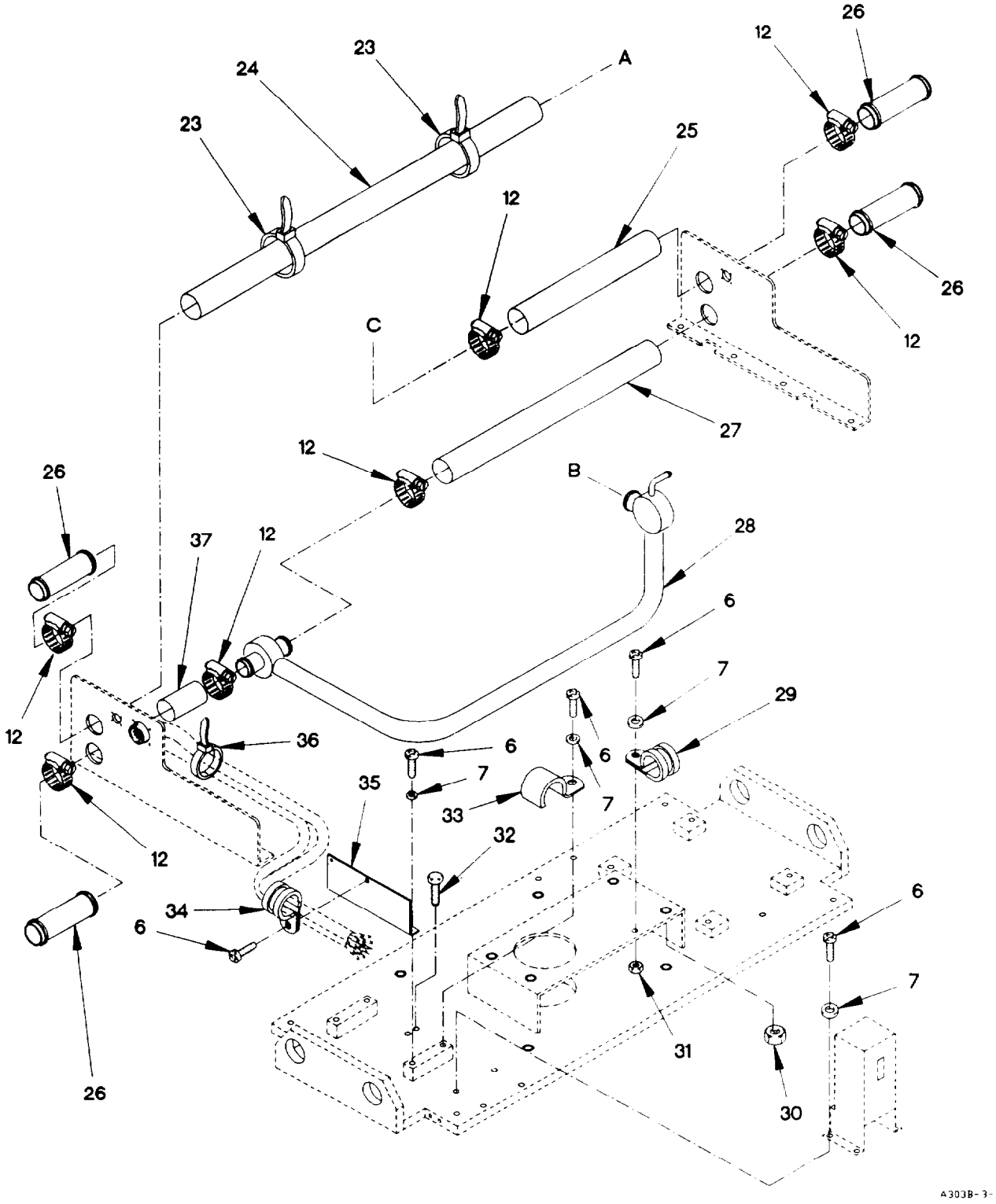

Figure 258. Cargo Furnace Assembly (Sheet 3 of 3)

(1) ITEM NO	(2) SMR CODE	(3) FSCM	(4) PART NUMBER	(5) DESCRIPTION AND USABLE ON CODE (UOC)	(6) QTY
				GROUP 3303: WINTERIZATION KITS FIG. 258 CARGO FURNACE ASSEMBLY	
1	PAOFF	0FW39	12419976	HEATER, VEHICULAR, CO UOC: LAB, LAC, LWB, LWC,	1
2	PFOZZ	0FW39	12419977	.COVER, PROTECTIVE EQ UOC: LAB, LAC, LWB, LWC,	1
3	PAOZZ	71286	18L01-1-1AA	. .LATCH, SNAPSLIDE FAS UOC: LAB, LAC, LWB, LWC,	4
4	PAOZZ	19207	12414570-012	. .WASHER, LOCK M4.3 UOC: LAB, LAC, LWB, LWC,	4
5	PAOZZ	56161	10505582	. .SCREW, MACHINE M4 X .7 X 6.6 UOC: LAB, LAC, LWB, LWC,	4
6	PAOZZ	15526	DIN933-M6X16-8.8 -4AC	.SCREW, CAP, HEXAGON H M6 X 1 X 16 UOC: LAB, LAC, LWB, LWC,	11
7	PAOZZ	19200	12524631-1	.WASHER, FLAT M6 UOC: LAB, LAC, LWB, LWC,	11
8	PAOZZ	88044	AN849-4D	.CONNECTOR, HOSE, BULK UOC: LAB, LAC, LWB, LWC,	2
9	PAOZZ	88044	AN924-4J	.NUT, PLAIN, HEXAGON 7/16-20UNF UOC: LAB, LAC, LWB, LWC,	2
10	PAOZZ	88907	B54-32780	.CLAMP, HOSE UOC: LAB, LAC, LWB, LWC,	3
11	MOOZZ	81349	M62217/1-24-2.31	.HOSE, NONMETALLIC MAKE FROM HOSE P/N: A52426-1K (81349) X 2.31 IN UOC: LAB, LAC, LWB, LWC,	4
12	PAOZZ	66295	WWD48-58H	.CLAMP, HOSE UOC: LAB, LAC, LWB, LWC,	16
13	MOOZZ	81349	M13444T1.25X3.5	.HOSE, NONMETALLIC MAKE FROM HOSE P/N: 483666 (49185) X 3.5 IN UOC: LAB, LAC, LWB, LWC,	1
14	PAOZZ	78225	AX-0465	.CAP, FILLER OPENING UOC: LAB, LAC, LWB, LWC,	1
15	MOOZZ	81349	M13444T1.25X3	.HOSE, NONMETALLIC MAKE FROM HOSE P/N: 483666 (49185) X 3 IN UOC: LAB, LAC, LWB, LWC,	1
16	PAOZZ	15434	C0718103500	.SCREW, CAP, HEXAGON H M8 X 1.25 X 16 UOC: LAB, LAC, LWB, LWC,	8
17	PAOZZ	34914	990 3861	.WASHER, FLAT M8.4 UOC: LAB, LAC, LWB, LWC,	12
18	PAOZZ	19207	12419993	.RADIATOR, ENGINE COO UOC: LAB, LAC, LWB, LWC,	1
19	MOOZZ	81349	M13444T1.25X12	.HOSE, NONMETALLIC MAKE FROM HOSE P/N: 483666 (49185) X 12 IN UOC: LAB, LAC, LWB, LWC,	1

(1) ITEM NO	(2) SMR CODE	(3) FSCM	(4) PART NUMBER	(5) DESCRIPTION AND USABLE ON CODE (UOC)	(6) QTY
20	MOOZZ	81349	M13444T1.25X48	.HOSE, NONMETALLIC MAKE FROM HOSE P/N: 483666 (49185) X 48IN UOC: LAB, LAC, LWB, LWC,	1
21	PAOZZ	81343	4-4 430260S	.ELBOW, PIPE TO HOSE UOC: LAB, LAC, LWB, LWC,	1
22	PAOZZ	19207	12419979	.TUBE, BENT, METALLIC UOC: LAB, LAC, LWB, LWC,	1
23	PAOZZ	96906	MS3367-2-0	.STRAP, TIEDOWN, ELECT UOC: LAB, LAC, LWB, LWC,	2
24	MOOZZ	81349	M62217/1-16-40	.HOSE, NONMETALLIC MAKE FROM HOSE P/N: M62217/1-16BULK (81349) X 40IN UOC: LAB, LAC, LWB, LWC,	1
25	MOOZZ	81349	M62217/1-16-16	.HOSE, NONMETALLIC MAKE FROM HOSE P/N: M62217/1-16BULK (81349) X 16IN UOC: LAB, LAC, LWB, LWC,	1
26	PAOZZ	96906	MS24520-11	.MENDER, HOSE UOC: LAB, LAC, LWB, LWC,	4
27	MOOZZ	81349	M62217/1-16-38	.HOSE, NONMETALLIC MAKE FROM HOSE P/N: M62217/1-16BULK (81349) X 38IN UOC: LAB, LAC, LWB, LWC,	1
28	PAOZZ	19207	12419978	.TUBE ASSEMBLY, METAL UOC: LAB, LAC, LWB, LWC,	1
29	PAOZZ	96906	MS9352-10	.CLAMP, LOOP UOC: LAB, LAC, LWB, LWC,	5
30	PAOZZ	1FH08	DIN555M8	.NUT, PLAIN, HEXAGON M8 X 1.25 UOC: LAB, LAC, LWB, LWC,	4
31	PAOZZ	19207	12414308-002	.NUT, SELF-LOCKING, EX M6 X 1 UOC: LAB, LAC, LWB, LWC,	2
32	PAOZZ	1CJ86	BN28-M10X60	.SETSCREW M10 X 60 UOC: LAB, LAC, LWB, LWC,	2
33	PAOZZ	72629	PTMC125	.STRAP, RETAINING UOC: LAB, LAC, LWB, LWC,	2
34	PAOZZ	96906	MS9352-18	.CLAMP, LOOP UOC: LAB, LAC, LWB, LWC,	1
35	PAOZZ	19207	12420239	.BRACKET, ANGLE UOC: LAB, LAC, LWB, LWC,	1
36	PAOZZ	96906	MS3367-1-0	.STRAP, TIEDOWN, ELECT UOC: LAB, LAC, LWB, LWC,	2
37	MOOZZ	81349	M62217/1-16-5	.HOSE, NONMETALLIC MAKE FROM HOSE P/N: M62217/1-16BULK (81349) X 5IN UOC: LAB, LAC, LWB, LWC,	1

END OF FIGURE

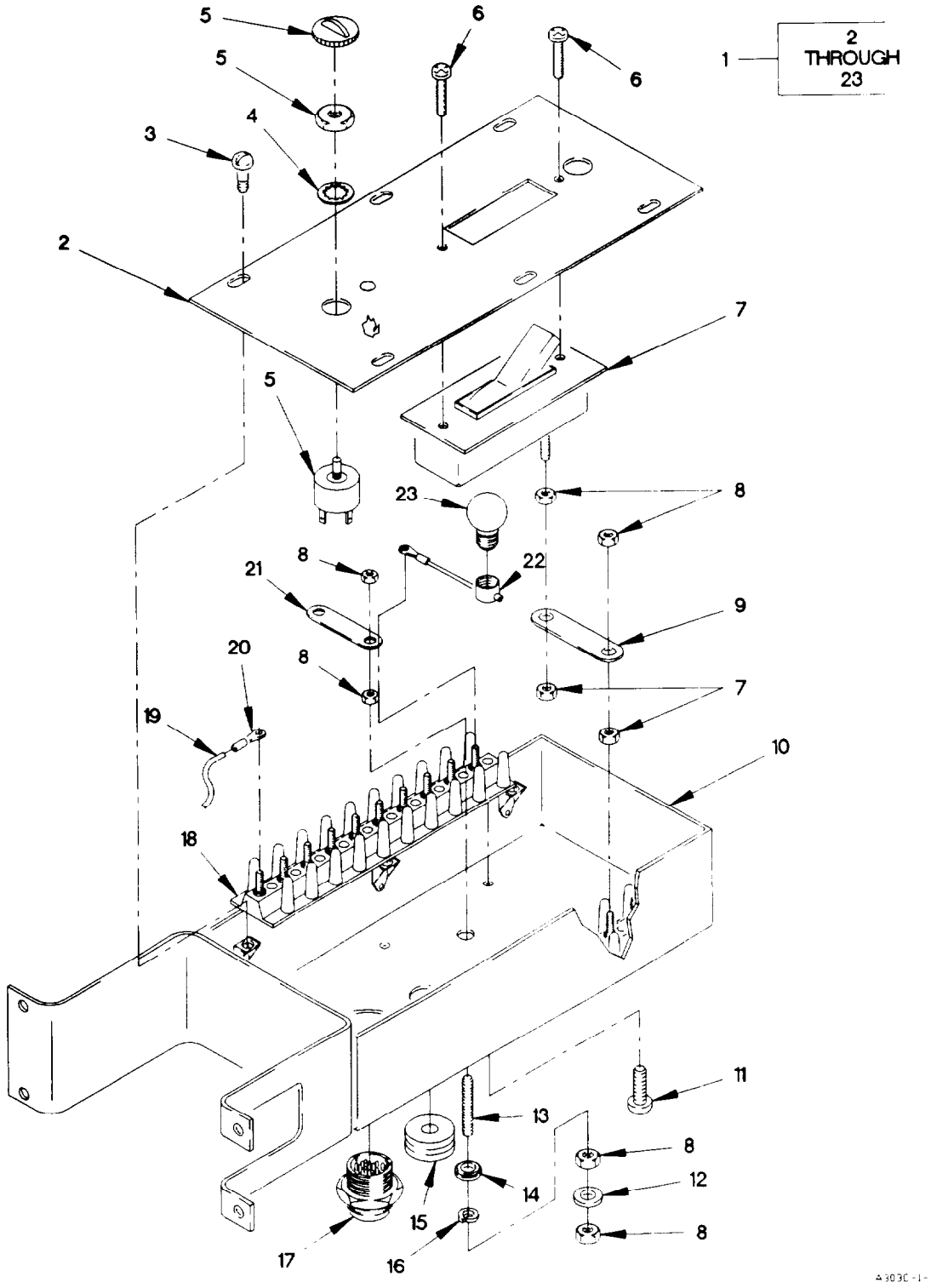

Figure 259. Cargo Furnace Control Unit

(1) ITEM NO	(2) SMR CODE	(3) FSCM	(4) PART NUMBER	(5) DESCRIPTION AND USABLE ON CODE (UOC)		(6) QTY
				GROUP 3303: WINTERIZATION KITS		
				FIG. 259 CARGO FURNACE CONTROL UNIT		
1	PAOOO	19207	12420182	CONTROL-POWER SUPPL		1
				UOC: LAB, LAC, LWB, LWC,		
2	PFOZZ	19207	12420228	.COVER, ACCESS		1
				UOC: LAB, LAC, LWB, LWC,		
3	PAOZZ	96906	MS51958-60	.SCREW, MACHINE #10-32 X 5/16		6
				UOC: LAB, LAC, LWB, LWC,		
4	PAOZZ	96906	MS35333-78	.WASHER, LOCK 1/2		1
				UOC: LAB, LAC, LWB, LWC,		
5	PAOZZ	19207	105373	.SWITCH, CONTROL		1
				UOC: LAB, LAC, LWB, LWC,		
6	PAOZZ	96906	MS51957-24	.SCREW, MACHINE #6-32 X 1/8		2
				UOC: LAB, LAC, LWB, LWC,		
7	PAOZZ	81349	M55629/2-127	.CIRCUIT BREAKER		1
				UOC: LAB, LAC, LWB, LWC,		
8	PAOZZ	96906	MS35650-304	.NUT, PLAIN, HEXAGON 3/16-32		8
				UOC: LAB, LAC, LWB, LWC,		
9	PAOZZ	96906	MS25226-4-3	.BUS, CONDUCTOR		1
				UOC: LAB, LAC, LWB, LWC,		
10	XAOZZ	19207	12420226	.BOX		1
				UOC: LAB, LAC, LWB, LWC,		
11	PAOZZ	96906	MS51957-7	.SCREW, MACHINE #2-56 X 1/2		6
				UOC: LAB, LAC, LWB, LWC,		
12	PAOZZ	96906	MS51859-16	.WASHER, FLAT 3/16		4
				UOC: LAB, LAC, LWB, LWC,		
13	PAOZZ	19207	12420271	.STUD, CONTINUOUS THR		2
				UOC: LAB, LAC, LWB, LWC,		
14	PAOZZ	81349	M45595/1-12	.WASHER, SHOULDERED 3/16		2
				UOC: LAB, LAC, LWB, LWC,		
15	PAOZZ	96906	MS35489-141	.GROMMET, NONMETALLIC		1
				UOC: LAB, LAC, LWB, LWC,		
16	PAOZZ	96906	MS35338-138	.WASHER, LOCK #10		2
				UOC: LAB, LAC, LWB, LWC,		
17	PAOZZ	96906	MS3474E20-16S	.CONNECTOR, RECEPTACL		1
				UOC: LAB, LAC, LWB, LWC,		
18	PAOZZ	96906	MS27212-2-16	.TERMINAL BOARD		2
				UOC: LAB, LAC, LWB, LWC,		
19	PAOZZ	81349	M16879/14BJE9	.WIRE, ELECTRICAL	V	
				UOC: LAB, LAC, LWB, LWC,		
20	PAOZZ	96906	MS20659-104	.TERMINAL, LUG		18
				UOC: LAB, LAC, LWB, LWC,		

(1) ITEM NO	(2) SMR CODE	(3) FSCM	(4) PART NUMBER	(5) DESCRIPTION AND USABLE ON CODE (UOC)	(6) QTY
21	PAOZZ	96906	MS25226-4-2	.BUS, CONDUCTOR UOC: LAB, LAC, LWB, LWC,	2
22	PAOZZ	96906	MS25010A11	.LIGHT, PANEL UOC: LAB, LAC, LWB, LWC,	1
23	PAOZZ	96906	MS25237-387R	.LAMP, INCANDESCENT UOC: LAB, LAC, LWB, LWC,	1

END OF FIGURE

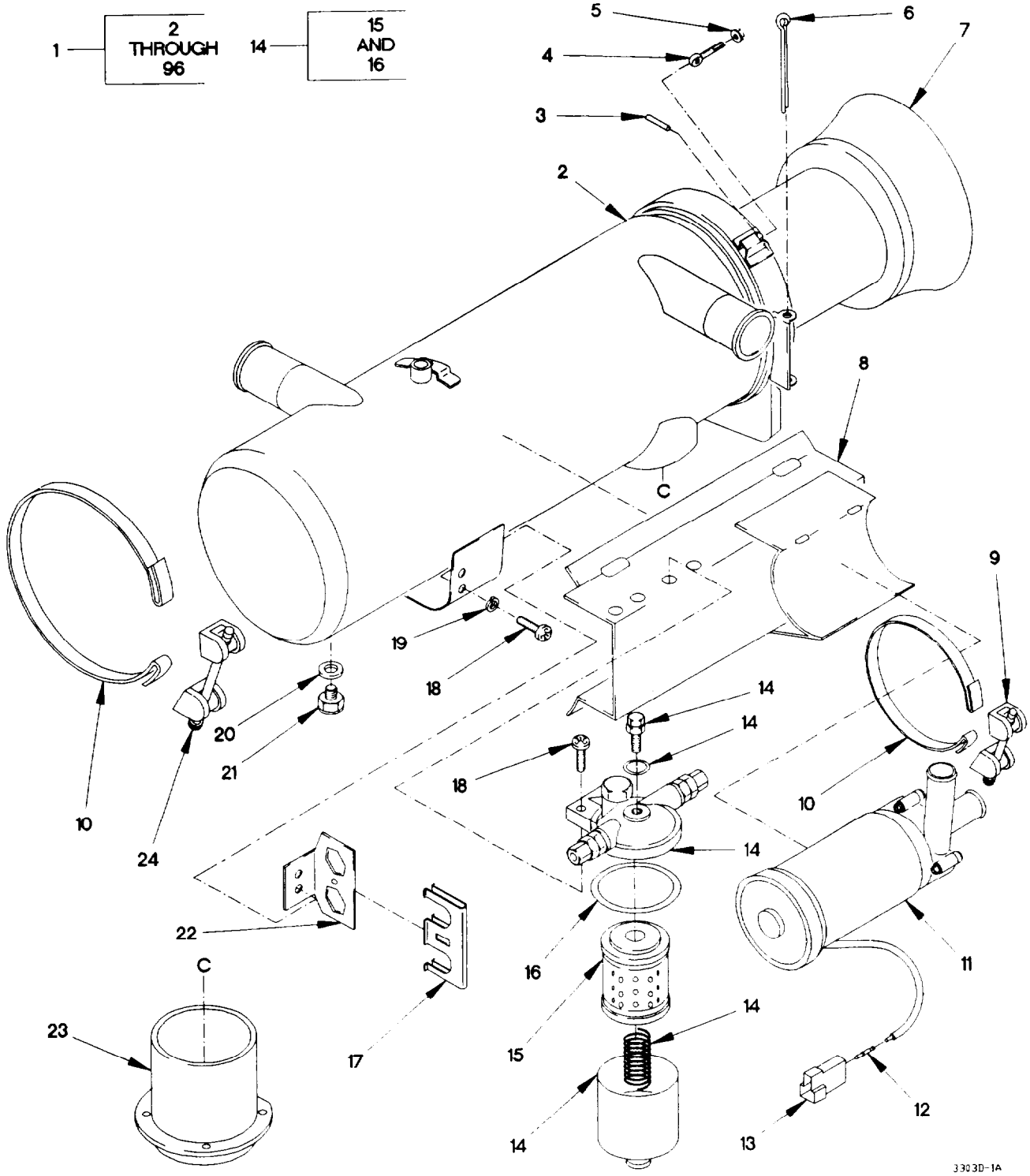

Figure 260. Cargo Furnace Heater Assembly (Sheet 1 of 5)

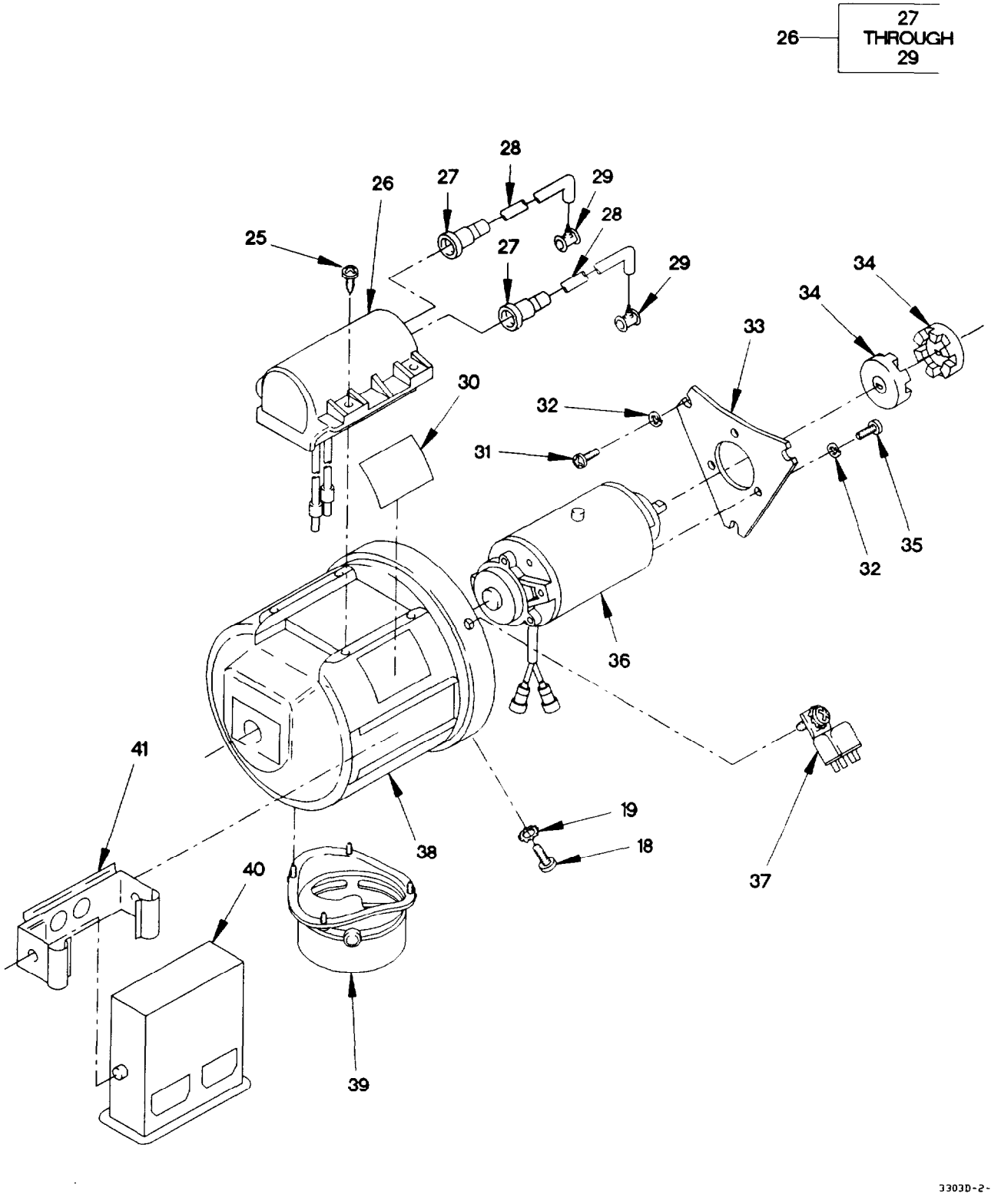

Figure 260. Cargo Furnace Heater Assembly (Sheet 2 of 5)

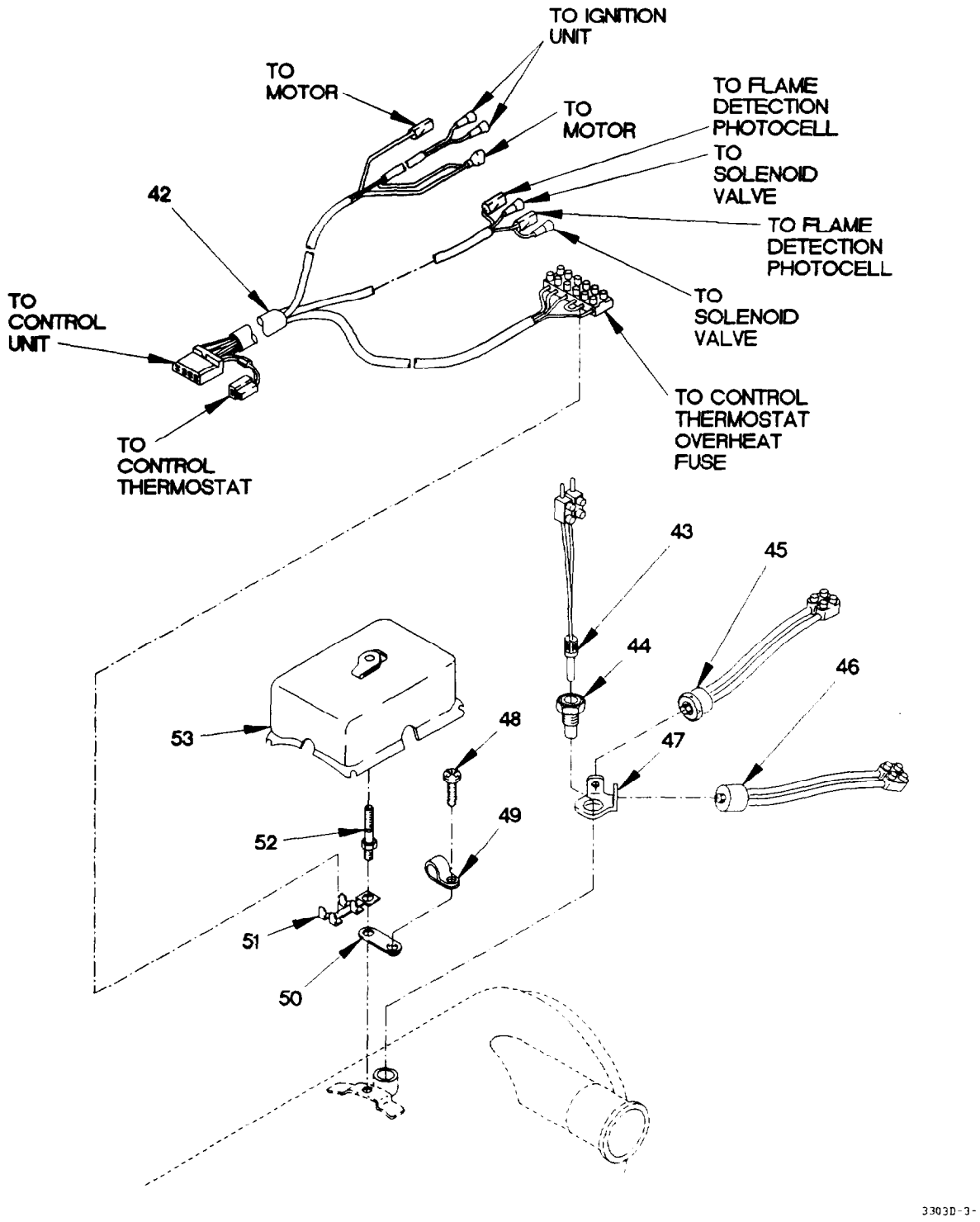

Figure 260. Cargo Furnace Heater Assembly (Sheet 3 of 5)

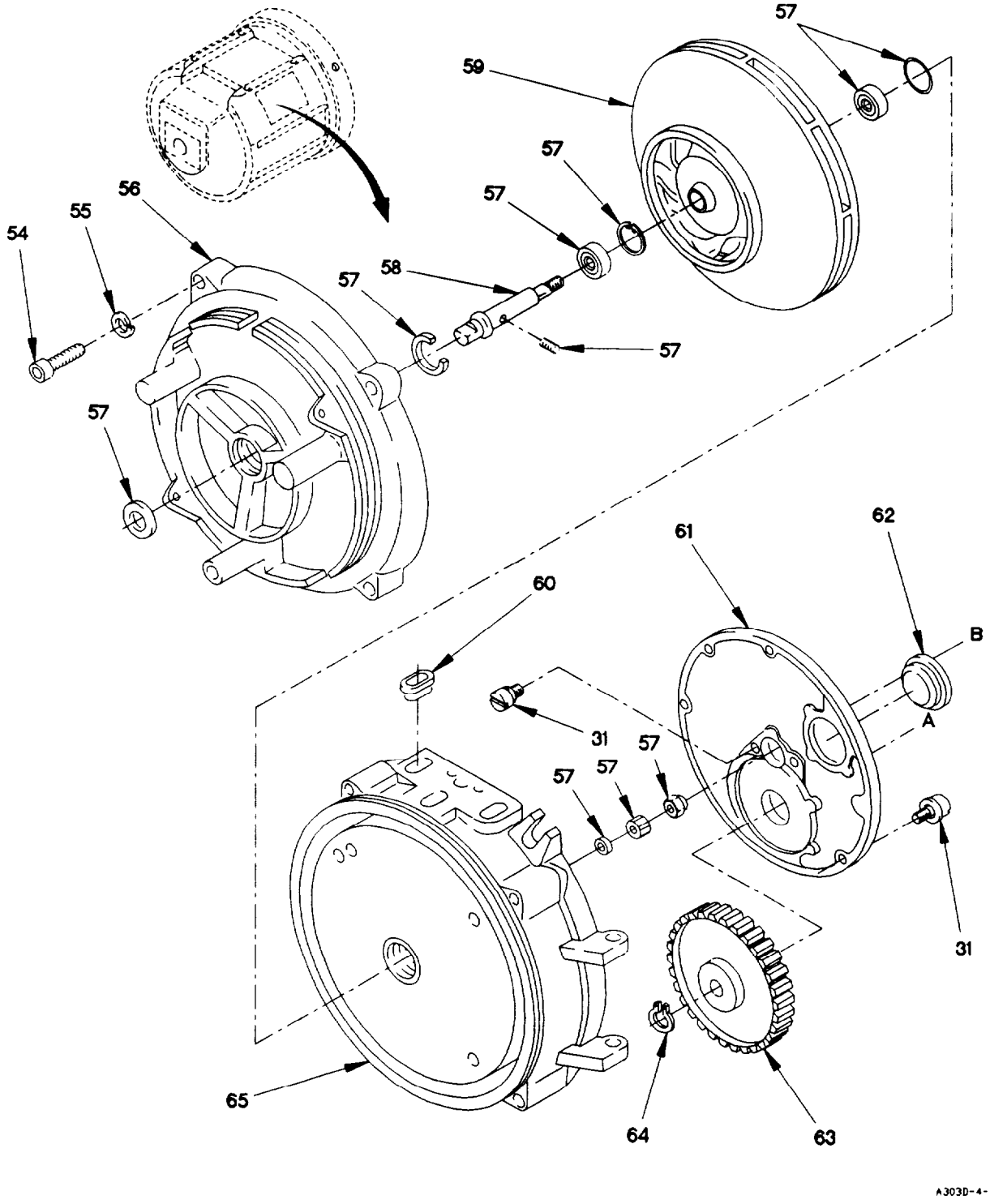

Figure 260. Cargo Furnace Heater Assembly (Sheet 4 of 5)

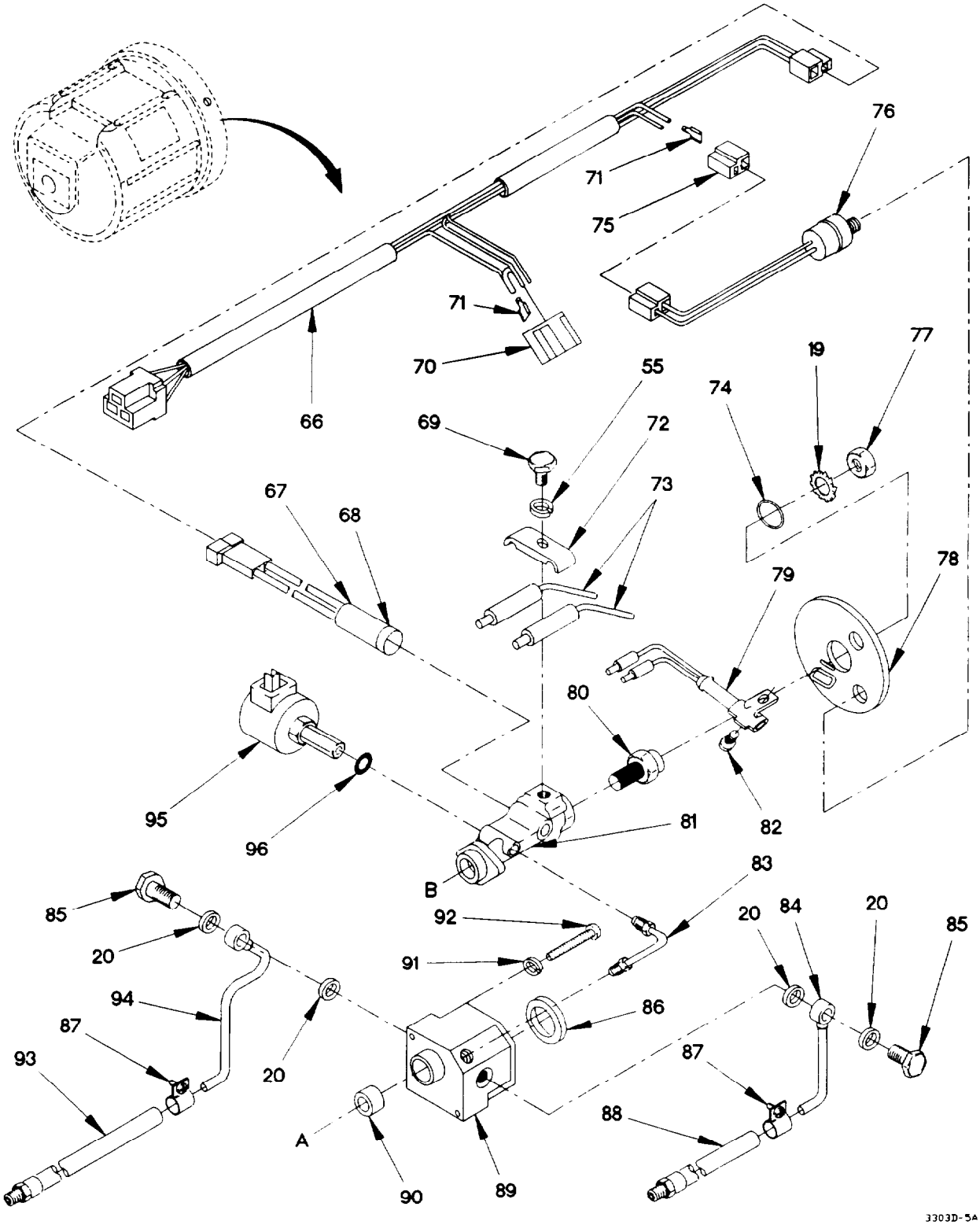

Figure 260. Cargo Furnace Heater Assembly (Sheet 5 of 5)

(1) ITEM NO	(2) SMR CODE	(3) FSCM	(4) PART NUMBER	(5) DESCRIPTION AND USABLE ON CODE (UOC)	(6) QTY
				GROUP 3303: WINTERIZATION KITS	
				FIG. 260 CARGO FURNACE HEATER ASSEMBLY	
1	PAFFF	62380	DBW2020.40	HEATER, COOLANT, ENGI	1
				UOC: LAB, LAC, LWB, LWC,	
2	PFFZZ	62380	469.084	.RADIATOR, VEHICULAR	1
				UOC: LAB, LAC, LWB, LWC,	
3	PAFZZ	62380	348.449	.PIN, GROOVED, HEADLES	2
				UOC: LAB, LAC, LWB, LWC,	
4	PAFZZ	62380	458.201	.BOLT, EYE	2
				UOC: LAB, LAC, LWB, LWC,	
5	PAFZZ	62380	461.563	.NUT, PLAIN, ASSEMBLED M8 X 1.25	2
				UOC: LAB, LAC, LWB, LWC,	
6	PAFZZ	62380	352.500	.PIN, COTTER	1
				UOC: LAB, LAC, LWB, LWC,	
7	PAFZZ	62380	464.333	.COMBUSTION CHAMBER,	1
				UOC: LAB, LAC, LWB, LWC,	
8	PAFZZ	62380	21324A	.BRACKET, MOUNTING	1
				UOC: LAB, LAC, LWB, LWC,	
9	PAFZZ	62380	109.492	.TURNBUCKLE	2
				UOC: LAB, LAC, LWB, LWC,	
10	PAFZZ	62380	136.190	.CLAMP, LOOP	2
				UOC: LAB, LAC, LWB, LWC,	
11	PAFZZ	62380	458392	.PUMP UNIT, CENTRIFUG	1
				UOC: LAB, LAC, LWB, LWC,	
12	PAFZZ	00779	42565-1	.TERMINAL, QUICK DISC	2
				UOC: LAB, LAC, LWB, LWC,	
13	PAFZZ	62380	178.802	.CONNECTOR, PLUG, ELEC	1
				UOC: LAB, LAC, LWB, LWC,	
14	PAFZZ	62380	140.708	.FILTER, ASSEMBLY, FLU	1
				UOC: LAB, LAC, LWB, LWC,	
15	PAFZZ	62380	140.716	. .FILTER, ELEMENT, FLU	1
				UOC: LAB, LAC, LWB, LWC,	
16	PAFZZ	62380	331.406	. .GASKET	1
				UOC: LAB, LAC, LWB, LWC,	
17	PAFZZ	62380	362.115	.BRACKET, MOUNTING	1
				UOC: LAB, LAC, LWB, LWC,	
18	PAFZZ	D8286	M4X12DIN7985-8-8	.SCREW, MACHINE M4 X 12	2
			-B3B	UOC: LAB, LAC, LWB, LWC,	
19	PAFZZ	62380	152.269	.WASHER, LOCK M8	2
				UOC: LAB, LAC, LWB, LWC,	
20	PAFZZ	62380	151.157	.GASKET	5
				UOC: LAB, LAC, LWB, LWC,	
21	PAFZZ	62380	149.314	.PLUG, MACHINE THREAD	1
				UOC: LAB, LAC, LWB, LWC,	
22	PAFZZ	62380	463.027	.BRACKET, MOUNTING	1
				UOC: LAB, LAC, LWB, LWC,	

(1) ITEM NO	(2) SMR CODE	(3) FSCM	(4) PART NUMBER	(5) DESCRIPTION AND USABLE ON CODE (UOC)		(6) QTY
23	PAFZZ	62380	132.748	.FILLER, NECK UOC: LAB, LAC, LWB, LWC,		1
24	PAFZZ	62380	136.204	.LOCK, HEATER UOC: LAB, LAC, LWB, LWC,		2
25	PAFFF	62380	470.562	.SCREW, TAPPING UOC: LAB, LAC, LWB, LWC,		4
26	PAFZZ	62380	101.830	.IGNITER, SPARK, FUEL UOC: LAB, LAC, LWB, LWC,		1
27	PAFZZ	D1993	404.918	. .CONDUCTOR UOC: LAB, LAC, LWB, LWC,		2
28	PAFZZ	62380	178.624	. .LEAD, ELECTRICAL UOC: LAB, LAC, LWB, LWC,	V	
29	PAFZZ	62380	326.666	. .PLUG ELECTRODE UOC: LAB, LAC, LWB, LWC,		2
30	PAFZZ	62380	101.660	.LABEL UOC: LAB, LAC, LWB, LWC,		2
31	PAFZZ	D8286	M5X12DIN7985-4-8 A2P	.SCREW, MACHINE UOC: LAB, LAC, LWB, LWC,		12
32	PAFZZ	62380	152.595	.WASHER, LOCK UOC: LAB, LAC, LWB, LWC,		2
33	PAFZZ	62380	350.680	.PLATE, MOUNTING UOC: LAB, LAC, LWB, LWC,		1
34	PAFZZ	62380	397.563	.COUPLING DRIVE UOC: LAB, LAC, LWB, LWC,		2
35	PAFZZ	21793	616329	.SCREW, MACHINE UOC: LAB, LAC, LWB, LWC,		2
36	PAFZZ	62380	106.082	.MOTOR, UNIVERSAL UOC: LAB, LAC, LWB, LWC,		1
37	PAFZZ	62380	248.401	.RELAY, ELECTROMAGNET UOC: LAB, LAC, LWB, LWC,		1
38	PAFZZ	62380	436.410	.COVER, ACCESS UOC: LAB, LAC, LWB, LWC,		1
39	PAFZZ	62380	350.427	.INTAKE, AIR UOC: LAB, LAC, LWB, LWC,		1
40	PAFZZ	62380	30607B	.SWITCH, THERMOSTATIC UOC: LAB, LAC, LWB, LWC,		1
41	PAFZZ	62380	362.107	.BRACKET, MOUNTING UOC: LAB, LAC, LWB, LWC,		1
42	PAFZZ	62380	444.170	.WIRING HARNESS UOC: LAB, LAC, LWB, LWC,		1
43	PAFZZ	62380	406.287	.FUSE LINK, THERMAL UOC: LAB, LAC, LWB, LWC,		1
44	PAFZZ	62380	279.110	.SCREW, SELF-LOCKING UOC: LAB, LAC, LWB, LWC,		1
45	PAFZZ	01993	354.902	.SWITCH, THERMOSTATIC UOC: LAB, LAC, LWB, LWC,		1
46	PAFZZ	62380	608.719	.FUSE LINK, THERMAL UOC: LAB, LAC, LWB, LWC,		1

(1) ITEM NO	(2) SMR CODE	(3) FSCM	(4) PART NUMBER	(5) DESCRIPTION AND USABLE ON CODE (UOC)	(6) QTY
47	PAFZZ	62380	289.329	.BRACKET, ANGLE UOC: LAB, LAC, LWB, LWC,	1
48	PAFZZ	56161	10505582	.SCREW, MACHINE M4 X .7 X 6.6 UOC: LAB, LAC, LWB, LWC,	1
49	PAFZZ	62380	288.640	.CLAMP, CABLE, ELECTRI UOC: LAB, LAC, LWB, LWC,	1
50	PAFZZ	62380	298.816	.BRACKET, MOUNTING UOC: LAB, LAC, LWB, LWC,	1
51	PAFZZ	62380	273.473	.CONSOLE, SWITCHING C UOC: LAB, LAC, LWB, LWC,	1
52	PAFZZ	62380	273.481	.SCREW, SELF-LOCKING UOC: LAB, LAC, LWB, LWC,	1
53	PAFZZ	62380	487.627	.CAP, PROTECTIVE, DUST UOC: LAB, LAC, LWB, LWC,	1
54	PAFZZ	62380	148.245	.SCREW, CAP, SOCKET HE UOC: LAB, LAC, LWB, LWC,	4
55	PAFZZ	62380	152.560	.WASHER, SPLIT M6 UOC: LAB, LAC, LWB, LWC,	5
56	PAFZZ	62380	286.354	.SUPPORT, MOTOR UOC: LAB, LAC, LWB, LWC,	1
57	PAFZZ	62380	378.321	.PARTS KIT, BEARING R UOC: LAB, LAC, LWB, LWC,	1
58	PAFZZ	62380	398.144	.SHAFT, AXLE, AUTOMOTI UOC: LAB, LAC, LWB, LWC,	1
59	PAFZZ	62380	275.611	.LAUFRAD UOC: LAB, LAC, LWB, LWC,	1
60	PAFZZ	62380	270.903	.GROMMET, METALLIC UOC: LAB, LAC, LWB, LWC,	5
61	PAFZZ	62380	103.512	.BURNER, GAS-OIL, COMB UOC: LAB, LAC, LWB, LWC,	1
62	PAFZZ	62380	277.479	.PLUG, PROTECTIVE, DUS UOC: LAB, LAC, LWB, LWC,	1
63	PAFZZ	62380	371.289	.GEAR, SPUR UOC: LAB, LAC, LWB, LWC,	1
64	PAFZZ	D8090	A6	.RING, RETAINING UOC: LAB, LAC, LWB, LWC,	1
65	PAFZZ	62380	286.303	.HOUSING, LIQUID PUMP UOC: LAB, LAC, LWB, LWC,	1
66	PAFZZ	62380	101.804	.WIRING HARNESS, BRAN UOC: LAB, LAC, LWB, LWC,	1
67	PAFZZ	62380	437.247	.HOLDER, SPRING UOC: LAB, LAC, LWB, LWC,	1
68	PAFZZ	62380	420042	.HEATING ELEMENT, ELE UOC: LAB, LAC, LWB, LWC,	1
69	PAFZZ	56161	10501757	.SCREW, CAP, HEXAGON H M6 X 1.0 X 16 UOC: LAB, LAC, LWB, LWC,	1
70	PAFZZ	62380	328.529	.CONNECTOR BODY, RECE UOC: LAB, LAC, LWB, LWC,	1

(1) ITEM NO	(2) SMR CODE	(3) FSCM	(4) PART NUMBER	(5) DESCRIPTION AND USABLE ON CODE (UOC)	(6) QTY
71	PAFZZ	62380	176.591	.CONNECTOR, PLUG, ELEC UOC: LAB, LAC, LWB, LWC,	10
72	PAFZZ	62380	278.971	.CLIP, SPRING TENSION UOC: LAB, LAC, LWB, LWC,	1
73	PAFZZ	62380	274.313	.ELECTRODE, IGNITION UOC: LAB, LAC, LWB, LWC,	2
74	PAFZZ	62380	453.048	.CIRCLIP UOC: LAB, LAC, LWB, LWC,	1
75	PAFZZ	62380	178.713	.TERMINAL BODY, QUICK UOC: LAB, LAC, LWB, LWC,	2
76	PAFZZ	62380	104.012	.SWITCH, THERMOSTATIC UOC: LAB, LAC, LWB, LWC,	1
77	PAFZZ	62380	147.044	.NUT, SELF-LOCKING, HE UOC: LAB, LAC, LWB, LWC,	1
78	PAFZZ	62380	296.740	.PLATE, MOUNTING UOC: LAB, LAC, LWB, LWC,	1
79	PAFZZ	62380	215.171	.IGNITER, SPARK, FUEL UOC: LAB, LAC, LWB, LWC,	1
80	PAFZZ	62380	470.716	.NOZZLE, OIL BURNER, P UOC: LAB, LAC, LWB, LWC,	1
81	PAFZZ	62380	412198	.BURNER, GAS-OIL, COMB UOC: LAB, LAC, LWB, LWC,	1
82	PAFZZ	45152	5WB42	.SCREW UOC: LAB, LAC, LWB, LWC,	1
83	PAFZZ	62380	275.476	.TUBE ASSEMBLY, METAL UOC: LAB, LAC, LWB, LWC,	1
84	PAFZZ	62380	352.144	.HOSE ASSEMBLY, NONME UOC: LAB, LAC, LWB, LWC,	1
85	PAFZZ	62380	150.754	.BOLT, FLUID PASSAGE UOC: LAB, LAC, LWB, LWC,	2
86	PAFZZ	62380	340.995	.GASKET UOC: LAB, LAC, LWB, LWC,	1
87	PAFZZ	62380	330.027	.CLAMP, HOSE UOC: LAB, LAC, LWB, LWC,	2
88	PAFZZ	62380	464.155	.TUBE ASSEMBLY, METAL UOC: LAB, LAC, LWB, LWC,	1
89	PAFZZ	62380	376.930	.PUMP, FUEL, ELECTRICA UOC: LAB, LAC, LWB, LWC,	1
90	PAFZZ	62380	260.738	.GASKET UOC: LAB, LAC, LWB, LWC,	1
91	PAFZZ	62380	152.544	.WASHER, LOCK M4 UOC: LAB, LAC, LWB, LWC,	5
92	PAFZZ	62380	277.282	.SCREW, CAP, SOCKET, HE UOC: LAB, LAC, LWB, LWC,	2
93	PAFZZ	D1993	352-13A	.SCHLAUCHLEITUNG, KRA UOC: LAB, LAC, LWB, LWC,	1

(1) ITEM NO	(2) SMR CODE	(3) FSCM	(4) PART NUMBER	(5) DESCRIPTION AND USABLE ON CODE (UOC)	(6) QTY
94	PAFZZ	62380	111.375	.TUBE ASSEMBLY, METAL UOC: LAB, LAC, LWB, LWC,	1
95	PAFZZ	45152	2BG782	.SOLENOID, ELECTRICAL UOC: LAB, LAC, LWB, LWC,	1
96	PAFZZ	62380	260.487	.O-RING UOC: LAB, LAC, LWB, LWC,	1

END OF FIGURE

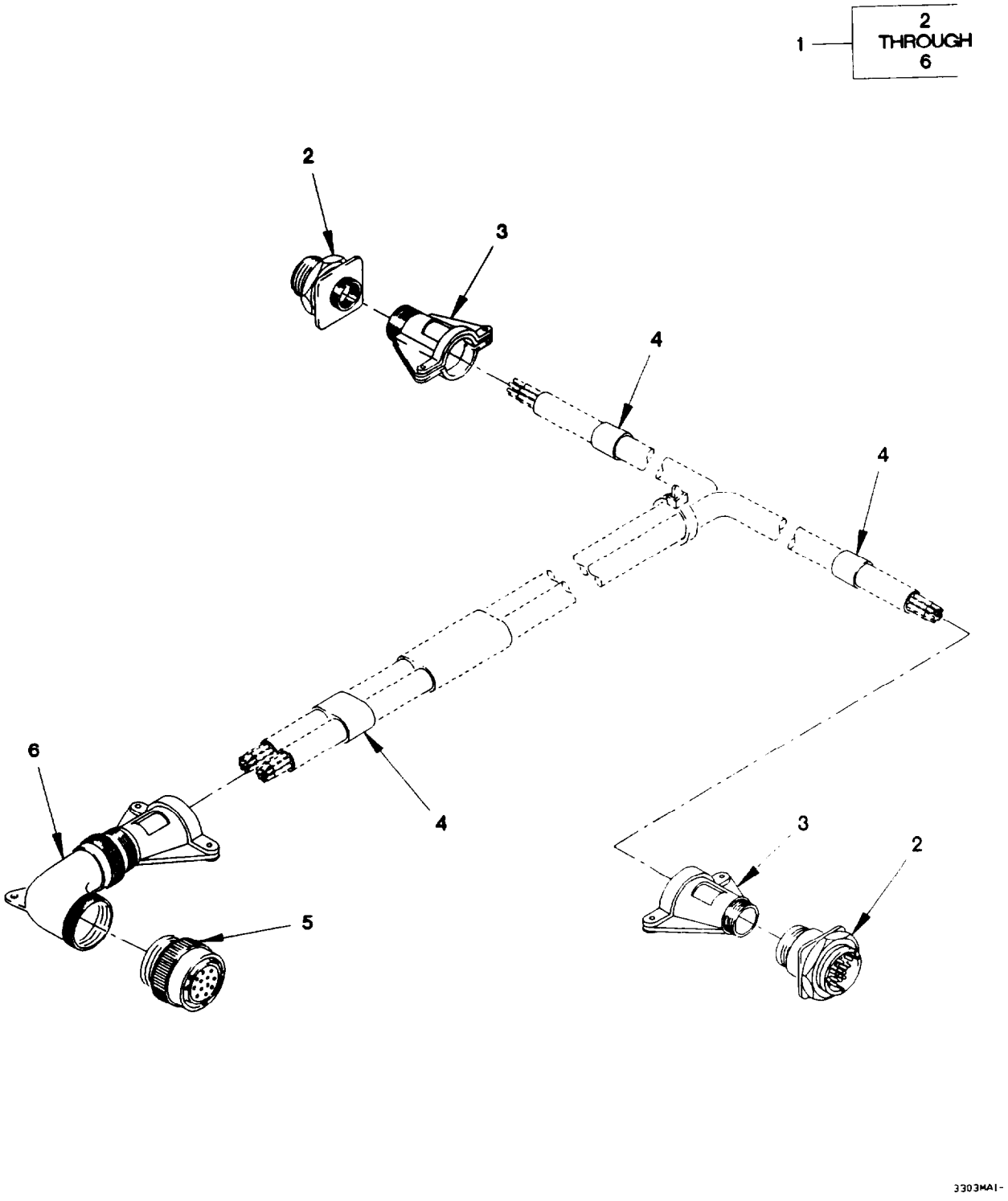

Figure 261. Cargo Furnace Blower Power Cable Assembly

(1) ITEM NO	(2) SMR CODE	(3) FSCM	(4) PART NUMBER	(5) DESCRIPTION AND USABLE ON CODE (UOC)	(6) QTY
				GROUP 3303: WINTERIZATION KITS FIG. 261 CARGO FURNACE BLOWER POWER CABLE ASSEMBLY	
1	PAOOO	0FW39	12420183	CABLE ASSEMBLY, SPEC UOC: LAB, LAC, LWB, LWC,	1
2	PAOZZ	96906	MS3474W16-8S	.CONNECTOR, RECEPTACL UOC: LAB, LAC, LWB, LWC,	2
3	PAOZZ	81349	M85049/52-1-16W	.CLAMP, CABLE, ELECTRI UOC: LAB, LAC, LWB, LWC,	2
4	PAOZZ	81349	M23053/5-207C	.INSULATION SLEEVING UOC: LAB, LAC, LWB, LWC,	3
4	PAOZZ	81349	M43436/1-3	.BAND, MARKER UOC: LAB, LAC, LWB, LWC,	3
5	PAOZZ	96906	MS3476W20-16P	.CONNECTOR, PLUG, ELEC UOC: LAB, LAC, LWB, LWC,	1
6	PAOZZ	81349	M85049/51-1-20W	.ADAPTER, CABLE CLAMP UOC: LAB, LAC, LWB, LWC,	1
				END OF FIGURE	

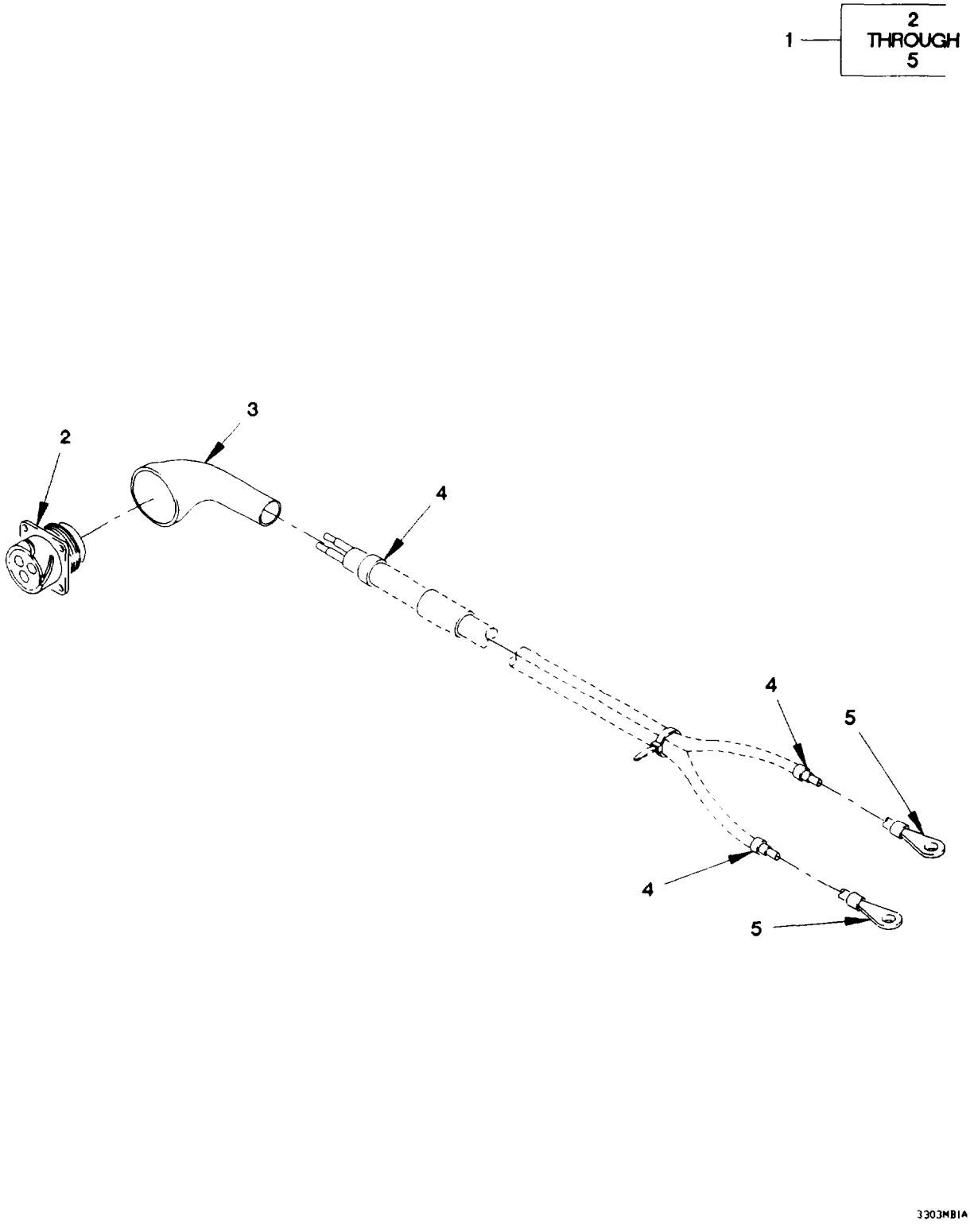

Figure 262. Cargo Furnace Power Cable Assembly

(1) ITEM NO	(2) SMR CODE	(3) FSCM	(4) PART NUMBER	(5) DESCRIPTION AND USABLE ON CODE (UOC)	(6) QTY
				GROUP 3303: WINTERIZATION KITS FIG. 262 CARGO FURNACE POWER CABLE ASSEMBLY	
1	PAOOO	19207	12420184	WIRING HARNESS UOC: LAB, LAC, LWB, LWC,	1
2	PAOZZ	11139	88049-24-03PN	.CONNECTOR, RECEPTACL UOC: LAB, LAC, LWB, LWC,	1
3	PAOZZ	75037	333H285-6-250	.INSULATION SLEEVING UOC: LAB, LAC, LWB, LWC,	1
4	PAOZZ	81349	M43436/1-3	.BAND, MARKER UOC: LAB, LAC, LWB, LWC,	3
5	PAOZZ	96906	MS20659-144	.TERMINAL, LUG UOC: LAB, LAC, LWB, LWC,	2
				END OF FIGURE	

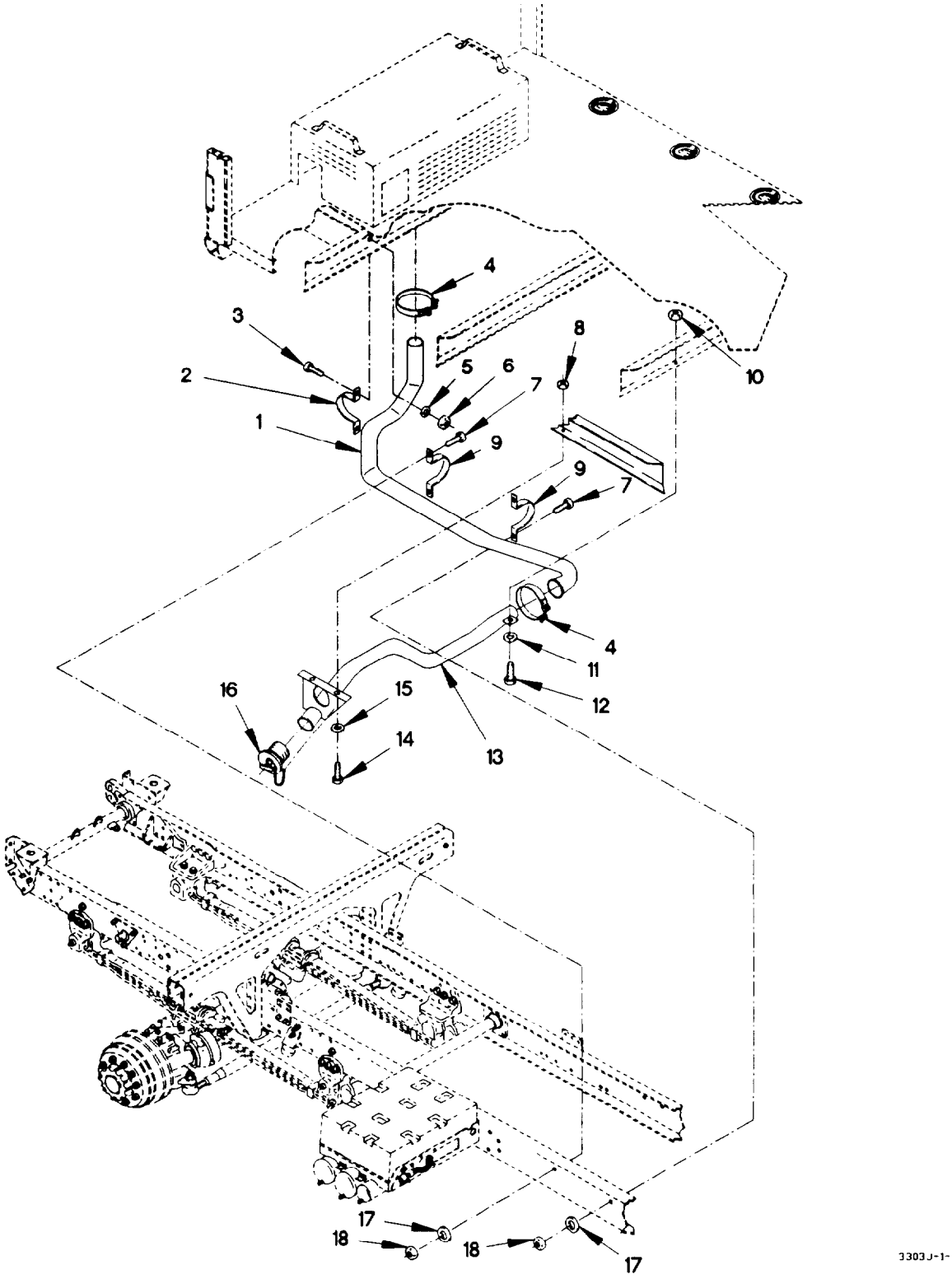

Figure 263. Arctic Cargo Furnace Exhaust Kit

(1) ITEM NO	(2) SMR CODE	(3) FSCM	(4) PART NUMBER	(5) DESCRIPTION AND USABLE ON CODE (UOC)	(6) QTY
				GROUP 3303: WINTERIZATION KITS	
				FIG. 263 ARCTIC CARGO FURNACE EXHAUST KIT	
1	PAOZZ	81349	M6202823444884	HOSE, AIR DUCT	1
				UOC: LAB, LAC, LWB, LWC,	
2	PAOZZ	96906	MS21314-18	STRAP, RETAINING	1
				UOC: LAB, LAC, LWB, LWC,	
3	PAOZZ	16004	82045	BOLT, MACHINE M8 X 1.25 X 35	3
				UOC: LAB, LAC, LWB, LWC,	
4	PAOZZ	96906	MS35842-14	CLAMP, HOSE	2
				UOC: LAB, LAC, LWB, LWC,	
5	PAOZZ	34914	990 3861	WASHER, FLAT M8.4	4
				UOC: LAB, LAC, LWB, LWC,	
6	PAOZZ	19207	12414474-011	NUT, PLAIN, HEXAGON M8 X 1	2
				UOC: LAB, LAC, LWB, LWC,	
7	PAOZZ	44940	800-2010	SCREW, CAP, HEXAGON H M5 X .8 X 20	2
				UOC: LAB, LAC, LWB, LWC,	
8	PAOZZ	96906	MS35650-3252	NUT, PLAIN, HEXAGON 1/4-28	2
				UOC: LAB, LAC, LWB, LWC,	
9	PAOZZ	88044	AN742-52	CLAMP, LOOP	2
				UOC: LAB, LAC, LWB, LWC,	
10	PAOZZ	19207	12414474-010	NUT, PLAIN, HEXAGON M6 X 1.0	1
				UOC: LAB, LAC, LWB, LWC,	
11	PAOZZ	19200	12524631-1	WASHER, FLAT M6	2
				UOC: LAB, LAC, LWB, LWC,	
12	PAOZZ	56161	10503805	SCREW, CAP, HEXAGON H M6 X 1 X 20	1
				UOC: LAB, LAC, LWB, LWC,	
13	PAOZZ	19207	12420337	PIPE, EXHAUST	1
				UOC: LAB, LAC, LWB, LWC,	
14	PAOZZ	96906	MS35266-79	SCREW, MACHINE 1/4-28 X 1/2	2
				UOC: LAB, LAC, LWB, LWC,	
15	PAOZZ	96906	MS27183-10	WASHER, FLAT 9/32	2
				UOC: LAB, LAC, LWB, LWC,	
16	PAOZZ	19207	12419057-003	CAP, FILLER OPENING	1
				UOC: LAB, LAC, LWB, LWC,	
17	PAOZZ	19207	12414473-010	WASHER, FLAT M5.5	2
				UOC: LAB, LAC, LWB, LWC,	
18	PAOZZ	19207	12414315-003	NUT, PLAIN, HEXAGON M5 X .8	2
				UOC: LAB, LAC, LWB, LWC,	
				END OF FIGURE	

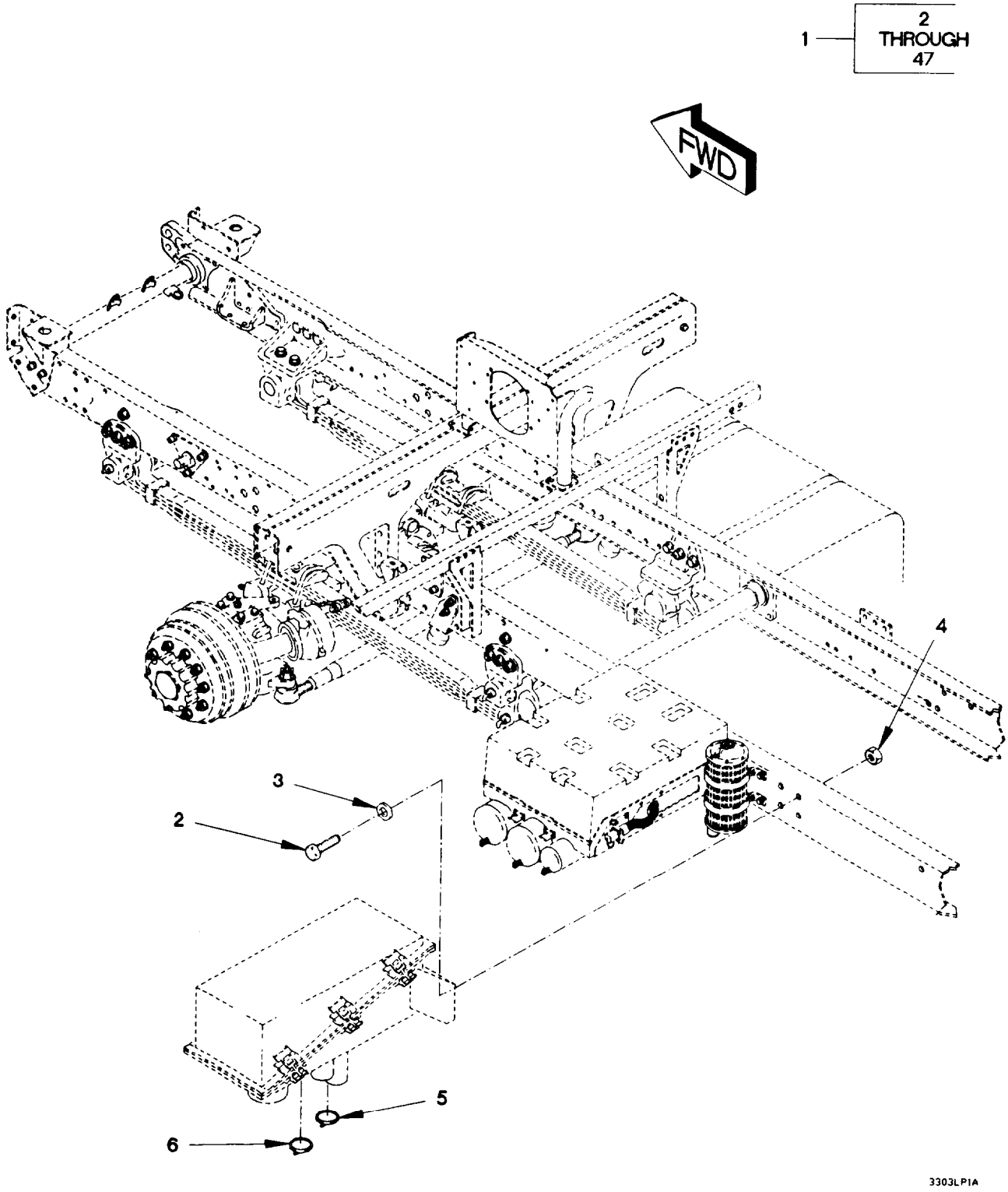

Figure 264. Cab Arctic Heater Kit (Sheet 1 of 4)

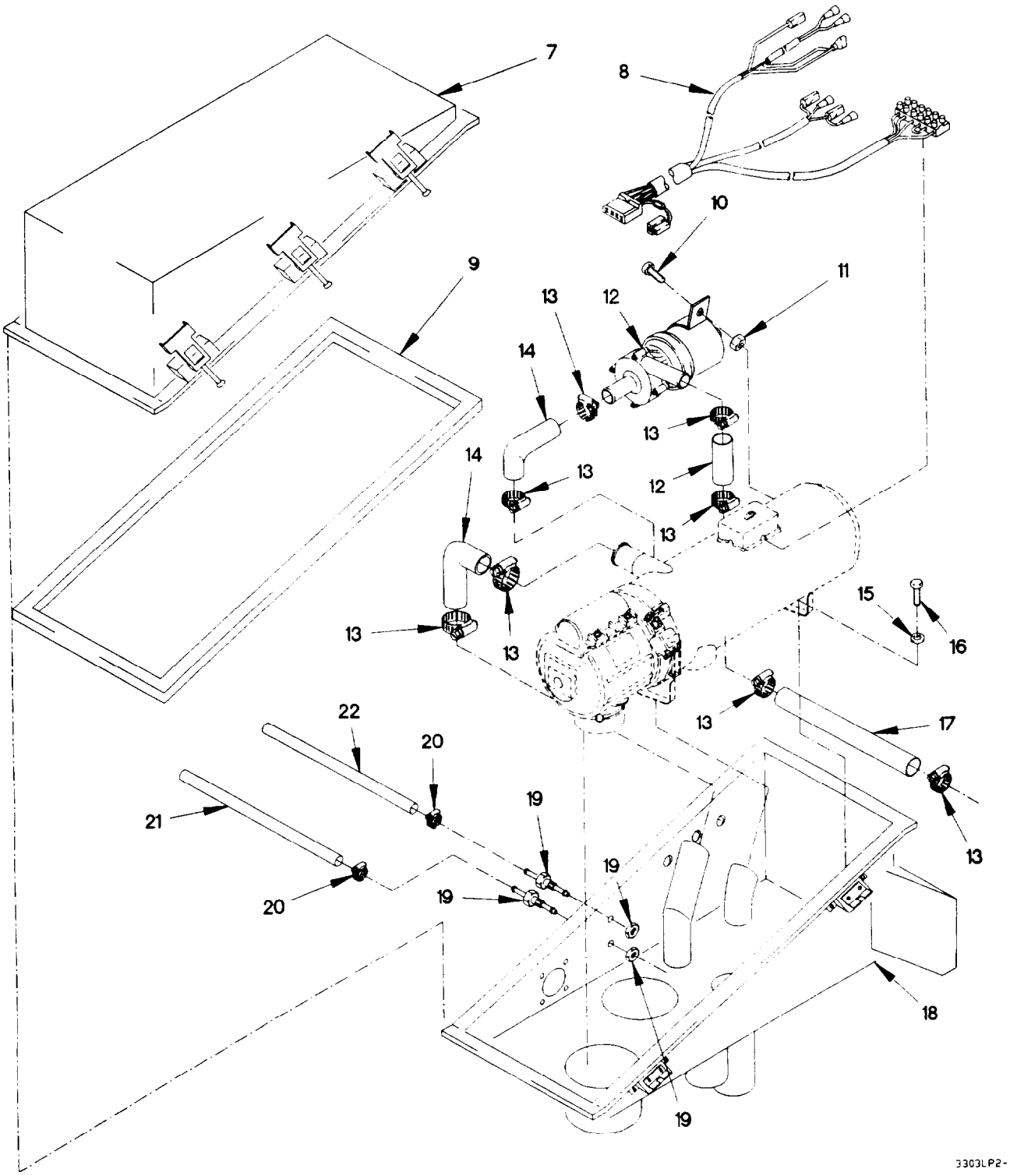

Figure 264. Cab Arctic Heater Kit (Sheet 2 of 4)

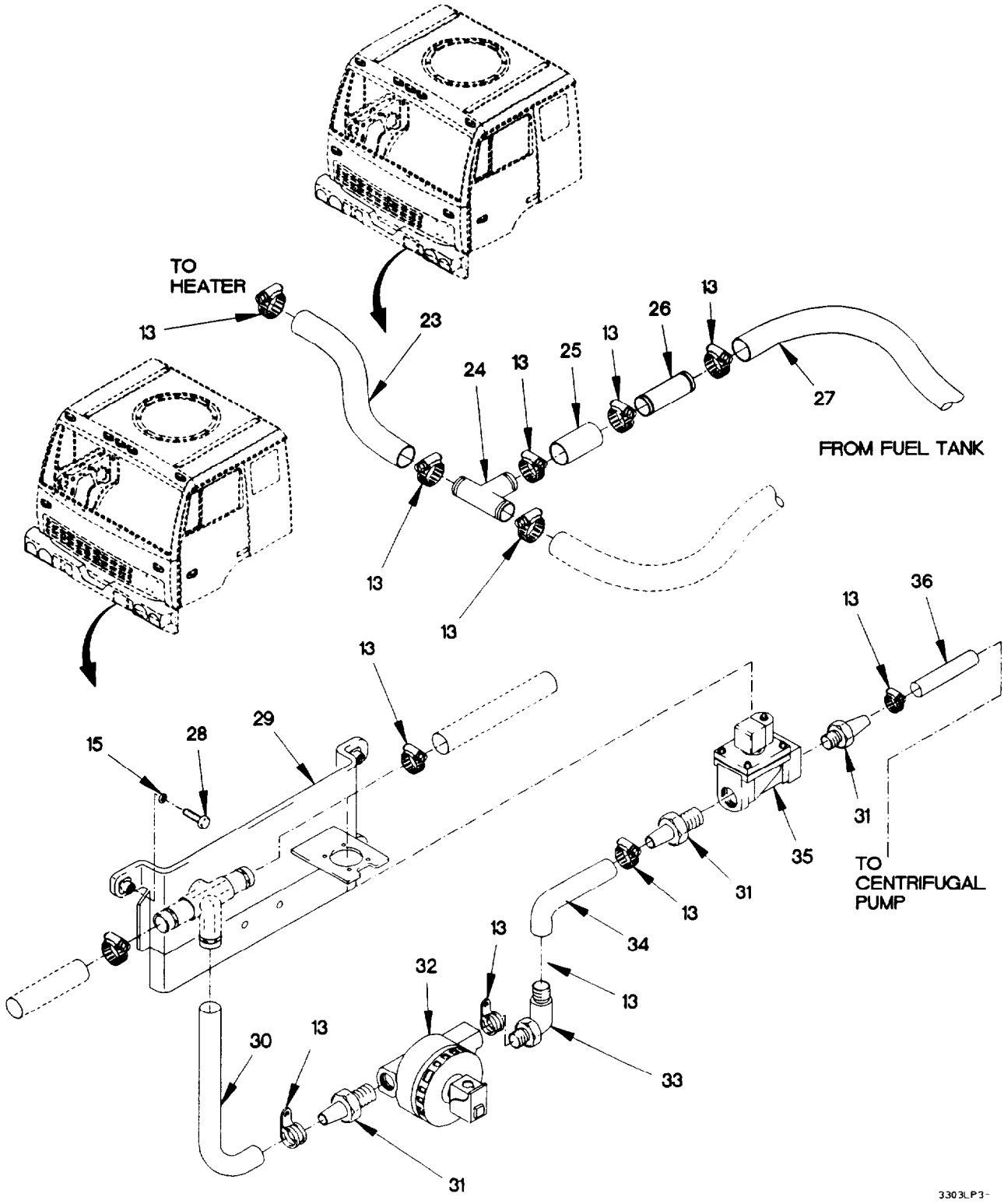

Figure 264. Cab Arctic Heater Kit (Sheet 3 of 4)

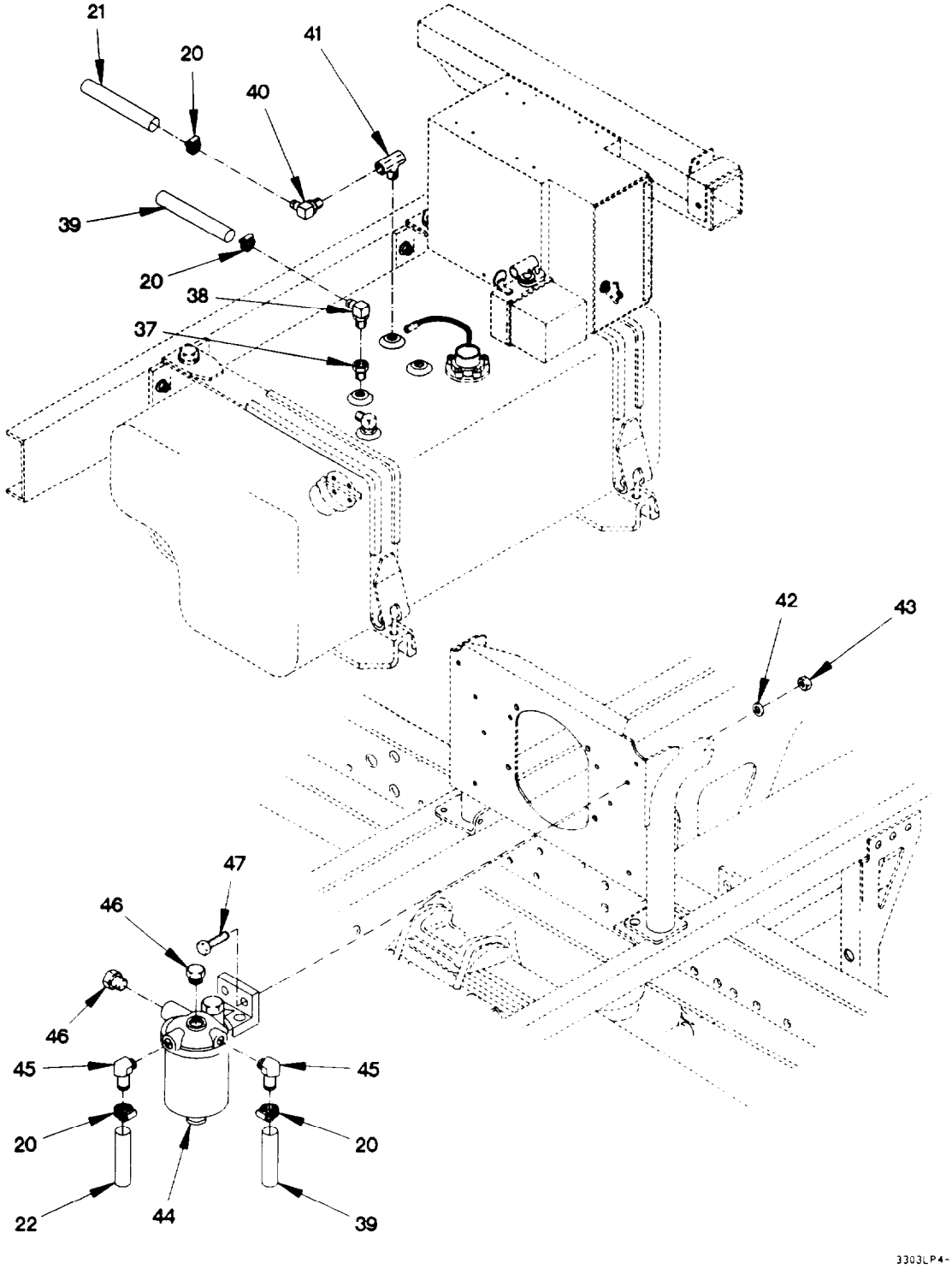

Figure 264. Cab Arctic Heater Kit (Sheet 4 of 4)

(1) ITEM NO	(2) SMR CODE	(3) FSCM	(4) PART NUMBER	(5) DESCRIPTION AND USABLE ON CODE (UOC)	(6) QTY
				GROUP 3303: WINTERIZATION KITS FIG. 264 CAB ARCTIC HEATER KIT	
1	PDFZZ	0FW39	57K1217	WINTERIZATION KIT, V	1
2	PAOZZ	19207	12414307-138	.BOLT, MACHINE M16 X 1.5 X 35	4
3	PAOZZ	45152	2AW725	.WASHER, FLAT M17	4
4	PAOZZ	19207	12414474-019	.NUT, PLAIN, HEXAGON M16 X 1.5	4
5	PAOZZ	01943	EXP25358	.CAP, FILLER OPENING	1
6	PAOZZ	01943	EXP25357	.CAP, FILLER OPENING	1
7	PAOZZ	19207	12418231	.COVER, ACCESS	1
8	PAOZZ	19207	12420502	.CABLE ASSEMBLY, SPEC	1
9	PAOZZ	19207	12419265	.GASKET	1
10	PAOZZ	64678	000933 006058	.SCREW, CAP, HEXAGON H M6 X 1 X 25	2
11	PAOZZ	19207	12414308-002	.NUT, SELF-LOCKING, EX M6 X 1	2
12	PAOZZ	62380	U4810	.PUMP, CENTRIFUGAL	1
13	PAOZZ	7Z588	9420	.CLAMP, HOSE	22
14	PAOZZ	19207	12418162-001	.HOSE, PREFORMED	2
15	PAOZZ	34914	990 3861	.WASHER, FLAT M8.4	6
16	PAOZZ	19207	12414307-025	.BOLT, MACHINE M8 X 1 X 30	4
17	MOOZZ	81349	M62217/1-12-3.50	.HOSE, NONMETALLIC MAKE FROM HOSE P/N: M62217/1-12-BULKLG (81349), X 3.5IN	1
18	XDOZZ	0FW39	12421779	.BOX, AUXILIARY HTR	1
19	PAOZZ	0TE27	22BH-4-4	.CONNECTOR, HOSE, BULK	2
20	PAOZZ	88907	B54-32780	.CLAMP, HOSE	9
21	MOOZZ	81349	M13444T1.250X144	.HOSE, NONMETALLIC MAKE FROM HOSE P/N: 483666 (49185), X 144 IN	1
22	MOOZZ	81349	M13444T1.250X140	.HOSE, NONMETALLIC MAKE FROM HOSE P/N: 483666 (49185), X 140 IN	1
23	MOOZZ	81349	M62217/1-10-6	.HOSE, NONMETALLIC MAKE FROM HOSE P/N: M62217/1-10-BULK (81349), X 6IN	1
24	PAOZZ	19207	12417940	.TUBE, METALLIC	1
25	MOOZZ	81349	M62217/1-10-4	.HOSE, NONMETALLIC MAKE FROM HOSE P/N: M62217/1-10-BULK (81349), X 4IN	1
26	PAOZZ	19207	12419086	.REDUCER, TUBE	1
27	MOOZZ	81349	M62217/1-12-165	.HOSE, NONMETALLIC MAKE FROM HOSE P/N: M62217/1-12-BULKLG (81349), X 165IN	1
28	PAOZZ	19207	12414307-023	.BOLT, MACHINE M8 X 1 X 20	2
29	PAOZZ	19207	12419153	.BRACKET, MOUNTING	1
30	PAOZZ	19207	12418162-002	.HOSE, PREFORMED	1
31	PAOZZ	81343	12-12 430160C	.ADAPTER, STRAIGHT, PI	2
32	PAOZZ	0FW39	12421723 0	.VALVE, SOLENOID	1
33	PAFZZ	81343	12-12 430260B	.ELBOW, PIPE TO HOSE	1
34	PAOZZ	19207	12418162-003	.HOSE, PREFORMED	1

(1) ITEM NO	(2) SMR CODE	(3) FSCM	(4) PART NUMBER	(5) DESCRIPTION AND USABLE ON CODE (UOC)	(6) QTY
35	PAOFF	19207	12421244	.VALVE, SOLENOID	1
36	MOOZZ	81349	M62217/1-12-180	.HOSE, NONMETALLIC MAKE FROM HOSE P/N: M62217/1-12-BULKLG (81349), X 180IN	1
37	PAOZZ	81343	6-4 140140S	.BUSHING, PIPE	1
38	PAOZZ	81343	4-4 430360S	.ELBOW, PIPE TO HOSE	1
39	MOOZZ	81349	M13444T1.250X72	.HOSE, NONMETALLIC MAKE FROM HOSE P/N 483666 (49185), X 72 IN	1
40	PAOZZ	81343	6-4 241442S	.ELBOW, TUBE TO HOSE	1
41	PAOZZ	81343	6-6-6 070425S	.TEE, PIPE TO TUBE	1
42	PAOZZ	19207	12414473-014	.WASHER, FLAT M10	2
43	PAOZZ	19207	12414315-009	.NUT, SELF-LOCKING, HE M10 X 1.5	2
44	PAOZZ	33457	3845560	.FILTER ELEMENT, FLUI	1
45	PAOZZ	81343	4-4 430260S	.ELBOW, PIPE TO HOSE	1
46	PAOZZ	81343	4 130109C	.PLUG, PIPE	2
47	PAOZZ	81495	071 410 36	.BOLT, MACHINE M10 X 1.5 X 40	2

END OF FIGURE

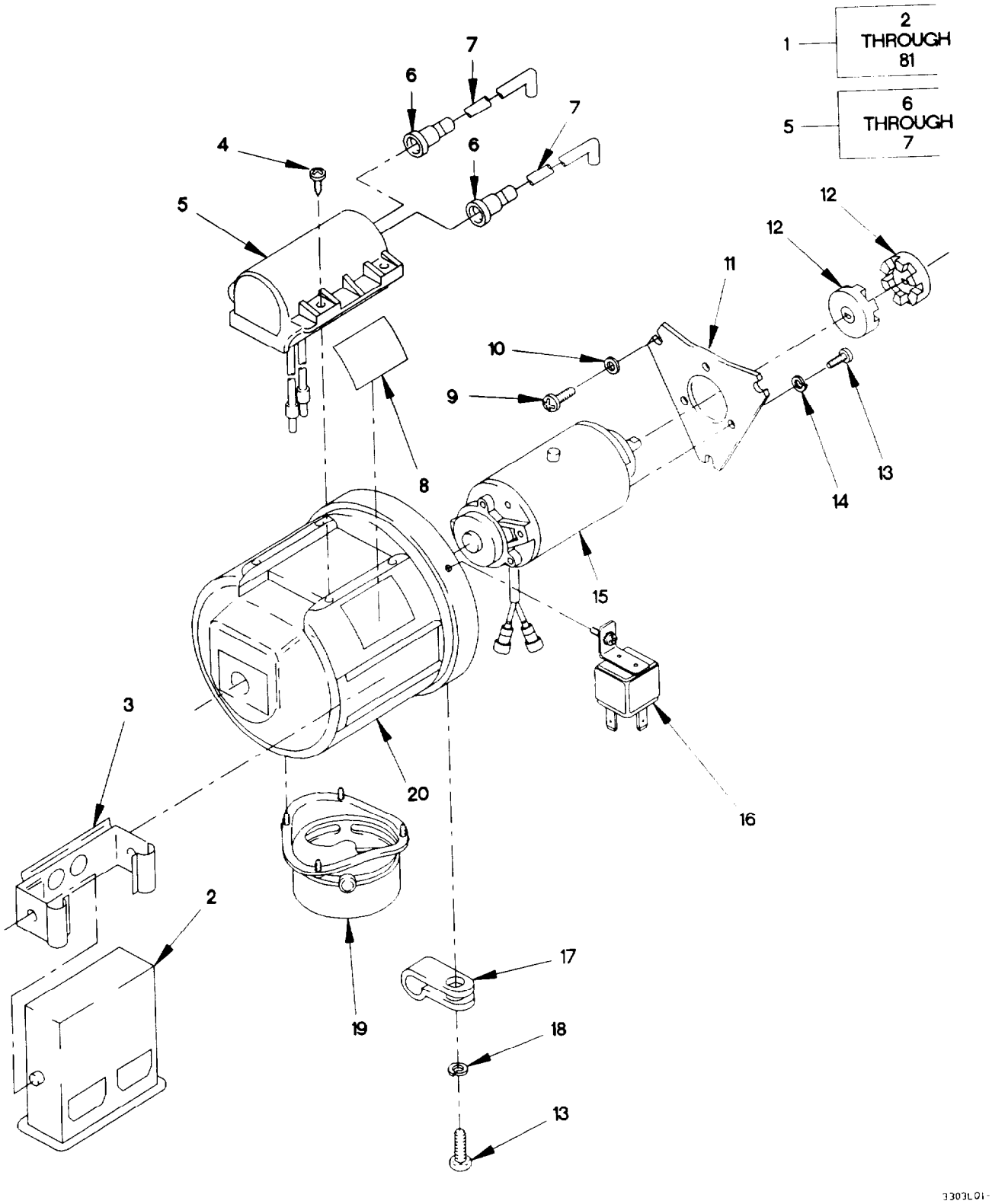

Figure 265. Cab Arctic Heater Assembly (Sheet 1 of 5)

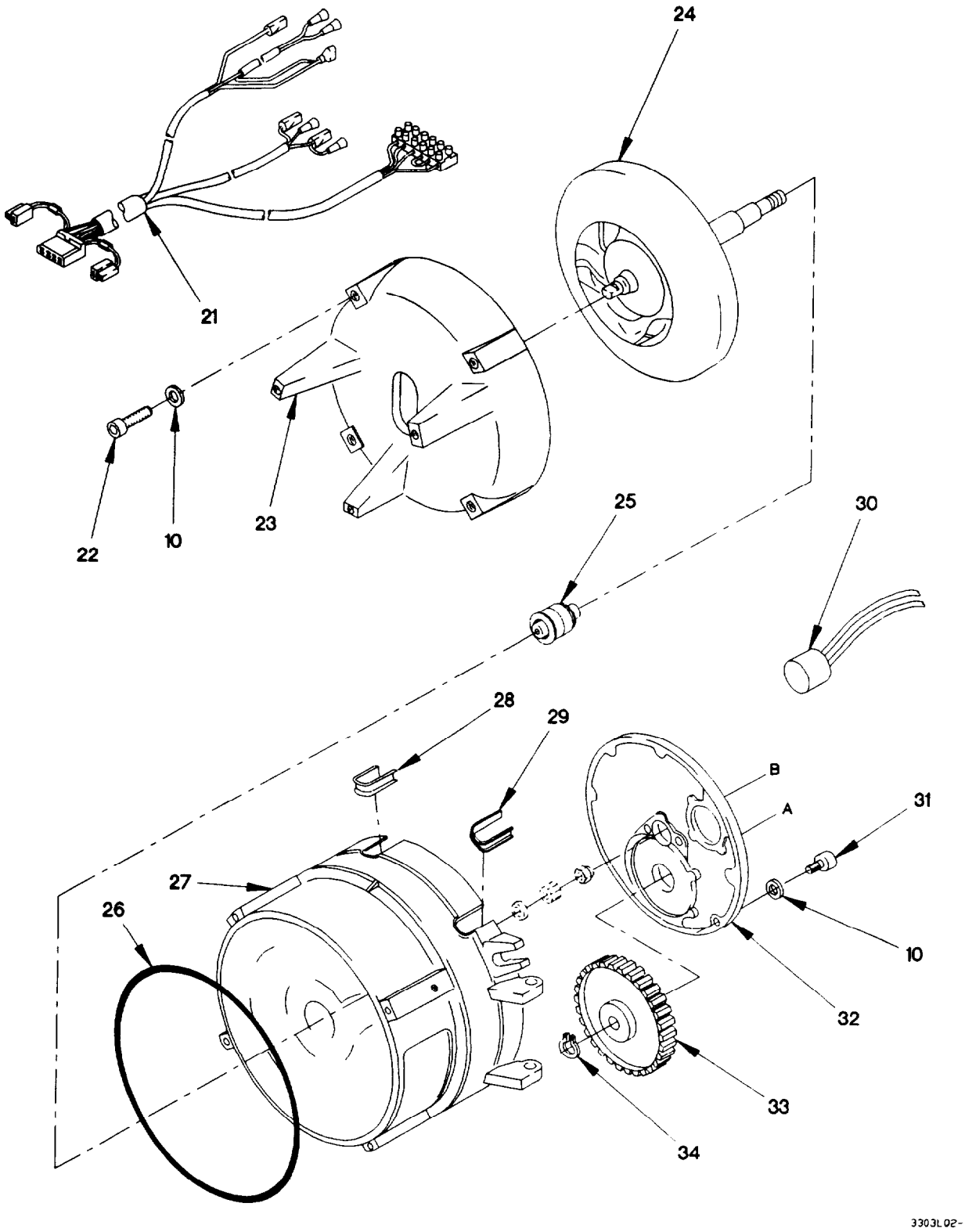

Figure 265. Cab Arctic Heater Assembly (Sheet 2 of 5)

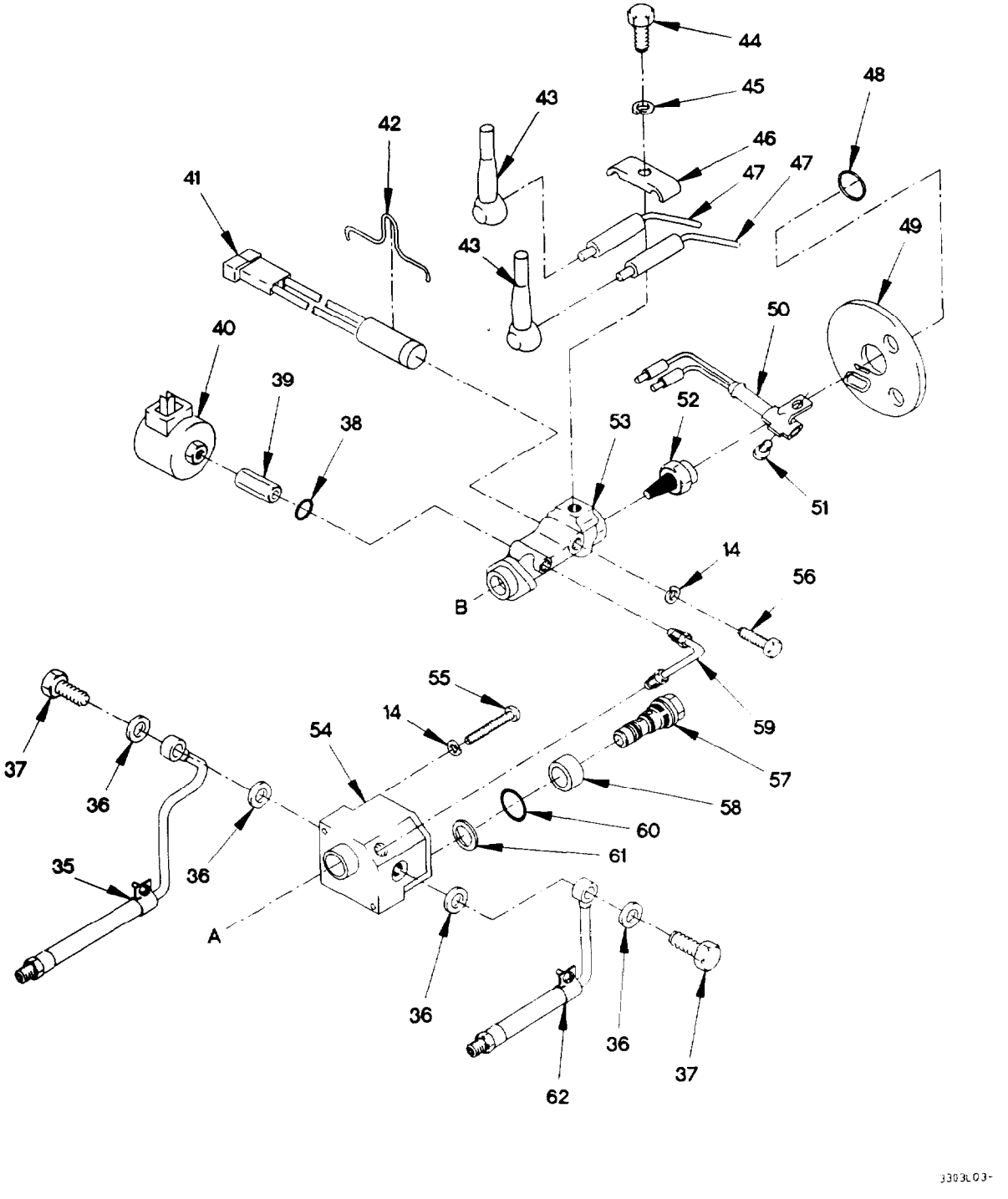

Figure 265. Cab Arctic Heater Assembly (Sheet 3 of 5)

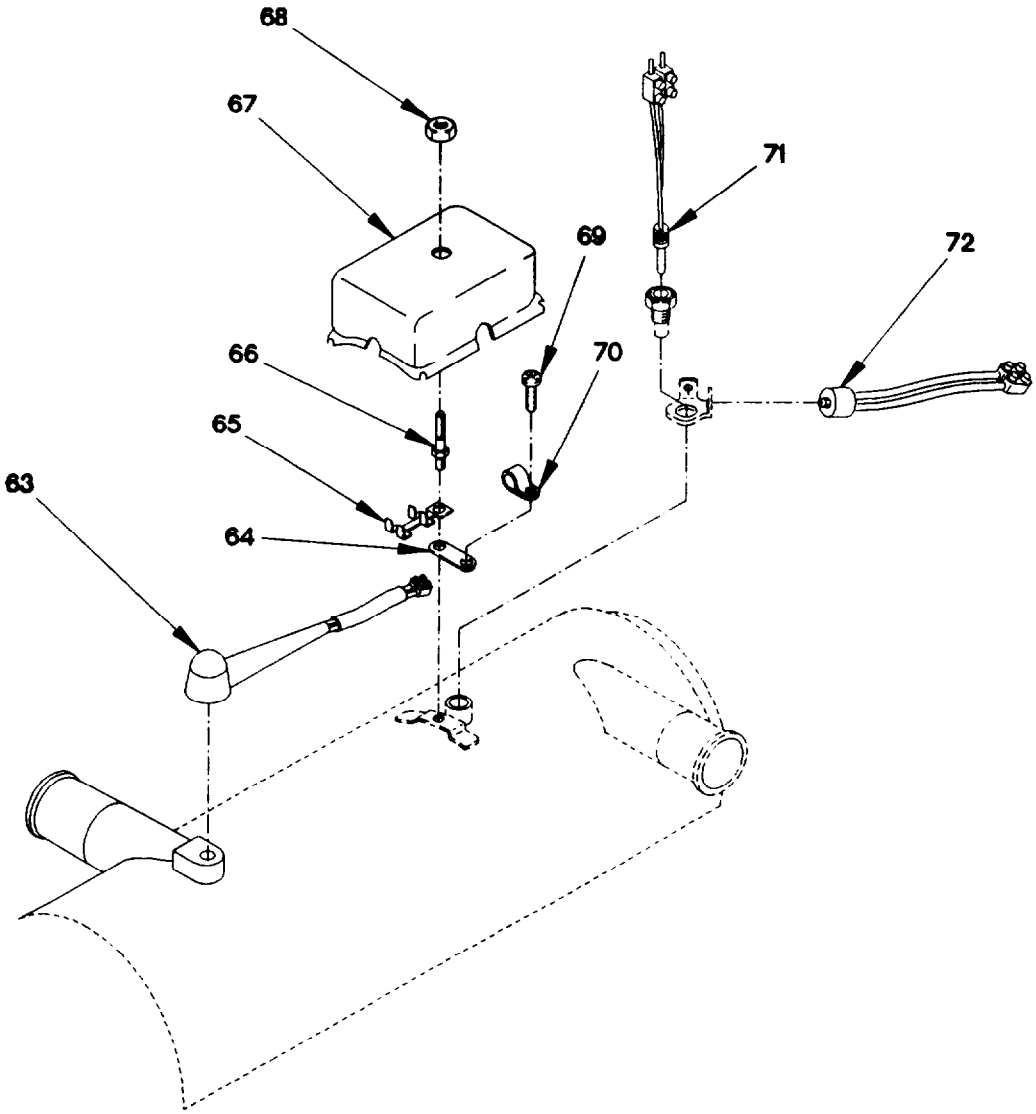

Figure 265. Cab Arctic Heater Assembly (Sheet 4 of 5)

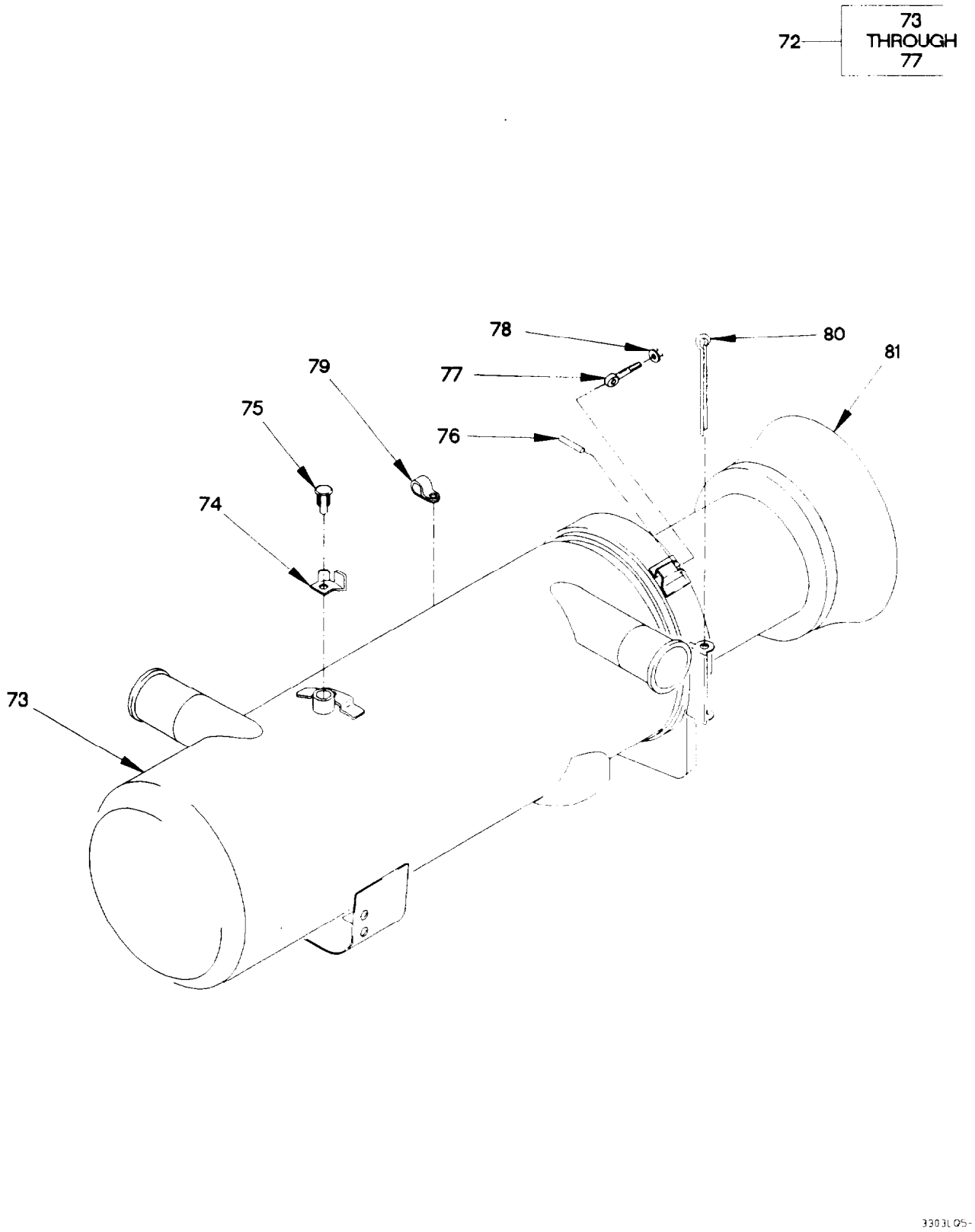

Figure 265. Cab Arctic Heater Assembly (Sheet 5 of 5)

(1) ITEM NO	(2) SMR CODE	(3) FSCM	(4) PART NUMBER	(5) DESCRIPTION AND USABLE ON CODE (UOC)	(6) QTY
				GROUP 3303: WINTERIZATION KITS FIG. 265 CAB ARCTIC HEATER ASSEMBLY	
1	PAOFF	62380	447.900	HEATER, COOLANT, ENGI	1
2	PAFZZ	62380	30607B	.SWITCH, THERMOSTATIC	1
3	PAFZZ	62380	362.107	.BRACKET, MOUNTING	1
4	PAFZZ	62380	382.485	.SCREW, TAPPING	4
5	PAFFF	62380	388.815	.SOLENOID, ELECTRICAL	1
6	PAFZZ	D1993	404.918	. .CONDUCTOR	2
7	PAFZZ	62380	178.624	. .LEAD, ELECTRICAL	2
8	PAFZZ	62380	101660	.PLATE, INSTRUCTION	1
9	PAFZZ	62380	147.834	.SCREW, TAPPING	3
10	PAFZZ	62380	152.552	.WASHER, FLAT	11
11	PAFZZ	62380	425.052	.PLATE, MOUNTING	1
12	PAFZZ	62380	350.516	.CLUTCH HALF, POSITIV	1
13	PAFZZ	D8286	M4X12DIN7985-8-8 -B3B	.SCREW, MACHINE M4 X 12	4
14	PAFZZ	62380	152.544	.WASHER, LOCK M4	5
15	PAFZZ	62380	425.079	.MOTOR, DIRECT CURREN	1
16	PAFZZ	62380	60.291	.RELAY, ELECTROMAGNET	1
17	PAFZZ	62380	316.199	.CLAMP, LOOP	1
18	PAFZZ	62380	152.269	.WASHER, LOCK M8	1
19	PAFZZ	62380	350.427	.INTAKE, AIR	1
20	PAFZZ	62380	436.216	.CAP, PROTECTIVE, DUST	1
21	PAFZZ	62380	434.795	.WIRING, HARNESS	1
22	PAFZZ	62380	148.210	.SCREW, MACHINE	1
23	PAFZZ	62380	301.841	.BRACKET, MOUNTING	1
24	PAFZZ	62380	373.001	.IMPELLER, FAN, AXIAL	1
25	PAFZZ	62380	378.313	.PARTS KIT, BEARING R	1
26	PAFZZ	62380	412.244	.O-RING	1
27	PAFZZ	62380	301.825	.HOUSING, ELECTRICAL	1
28	PAFZZ	62380	298.964	.GROMMET, NONMETALLIC	2
29	PAFZZ	62380	299.995	.GROMMET, NONMETALLIC	2
30	PAFZZ	62380	603.547	.SWITCH, THERMOSTATIC	1
31	PAFZZ	62380	277.150	.SCREW, CAP, HEXAGON H	4
32	PAFZZ	62380	377.368	.PLATE, NOZZLE HOLDER	1
33	PAFZZ	62380	371.289	.GEAR, SPUR	1
34	PAFZZ	D8090	A6	.RING, RETAINING	1
35	PAFZZ	62380	111.372	.TUBE ASSEMBLY, METAL	1
36	PAFZZ	62380	151.157	.GASKET	4
37	PAFZZ	62380	150.754	.BOLT, FLUID PASSAGE	2
38	PAFZZ	62380	260.487	.O-RING	1
39	PAFZZ	62380	386.650	.SOLENOID	1
40	PAFZZ	45152	2BG782	.SOLENOID, ELECTRICAL	1
41	PAFZZ	62380	420042	.HEATING ELEMENT, ELE	1
42	PAFZZ	62380	437.247	.HOLDER, SPRING	1
43	PAFZZ	62380	176.494	.CAP, PROTECTIVE, DUST	2
44	PAFZZ	56161	10501757	.SCREW, CAP, HEXAGON H M6 X 1.0 X 16	1

(1) ITEM NO	(2) SMR CODE	(3) FSCM	(4) PART NUMBER	(5) DESCRIPTION AND USABLE ON CODE (UOC)	(6) QTY
45	PAFZZ	62380	152.560	.WASHER, SPLIT M6	1
46	PAFZZ	62380	278.971	.CLIP, SPRING TENSION	1
47	PAFZZ	62380	274.313	.ELECTRODE, IGNITION	2
48	PAFZZ	62380	453.048	.CIRCLIP	1
49	PAFZZ	62380	378.232	.DISK, VALVE	1
50	PAFZZ	62380	215.171	.IGNITER, SPARK, FUEL	1
51	PAFZZ	45152	5WB42	.SCREW	1
52	PAFZZ	62380	429.112	.NOZZLE, OIL BURNER, P	1
53	PAFZZ	62380	412198	.BURNER, GAS-OIL, COMB	1
54	PAFFF	62380	42977A	.PUMP, ROTARY	1
55	PAFZZ	62380	277.282	.SCREW, CAP, SOCKET HE	2
56	PAFZZ	62380	331.562	.SCREW, MACHINE	1
57	PAFZZ	62380	355.836	.VALVE, PRESSURE	1
58	PAFZZ	62380	310.344	.FILTER, FLUID	1
59	PAFZZ	62380	275.476	.TUBE ASSEMBLY, METAL	1
60	PAFZZ	62380	340.995	.GASKET	1
61	PAFZZ	62380	260.738	.GASKET	1
62	PAFZZ	62380	345.288	.TUBE ASSEMBLY, METAL	1
63	PAFZZ	01993	354.902	.SWITCH ,THERMOSTATIC	1
64	PAFZZ	62380	298.816	.BRACKET, MOUNTING	1
65	PAFZZ	62380	273.473	.CONSOLE, SWITCHING C	1
66	PAFZZ	62380	273.481	.SCREW, SELF-LOCKING	1
67	PAFZZ	62380	276.456	.COVER, ACCESS	1
68	PAFZZ	62380	308.331	.NUT, PLAIN, CAP	1
69	PAFZZ	56161	10505582	.SCREW, MACHINE M4 X .7 X 6.6	1
70	PAFZZ	62380	319.430	.CLAMP, LOOP	1
71	PAFZZ	62380	406.287	.FUSE LINK, THERMAL	1
72	PAFZZ	62380	608.719	.FUSE LINK, THERMAL	1
73	PAFFF	62380	415.073	.HEATER, VEHICULAR, CO	1
74	PAFZZ	62380	289.329	. .BRACKET, ANGLE	1
75	PAFZZ	62380	279.110	. .SCREW, SELF-LOCKING	1
76	PAFZZ	62380	420.565	. .PIN, GROOVED, HEADLES	1
77	PAFZZ	62380	363.618	. .BOLT, EYE	1
78	PAFZZ	62380	461.555	. .NUT, PLAIN, EXTENDED	1
79	PAFZZ	62380	352.152	.CLAMP, LOOP	1
80	PAFZZ	62380	352.497	.PIN, COTTER	1
81	PAFZZ	62380	26553A	.COMBUSTION CHAMBER,	1

END OF FIGURE

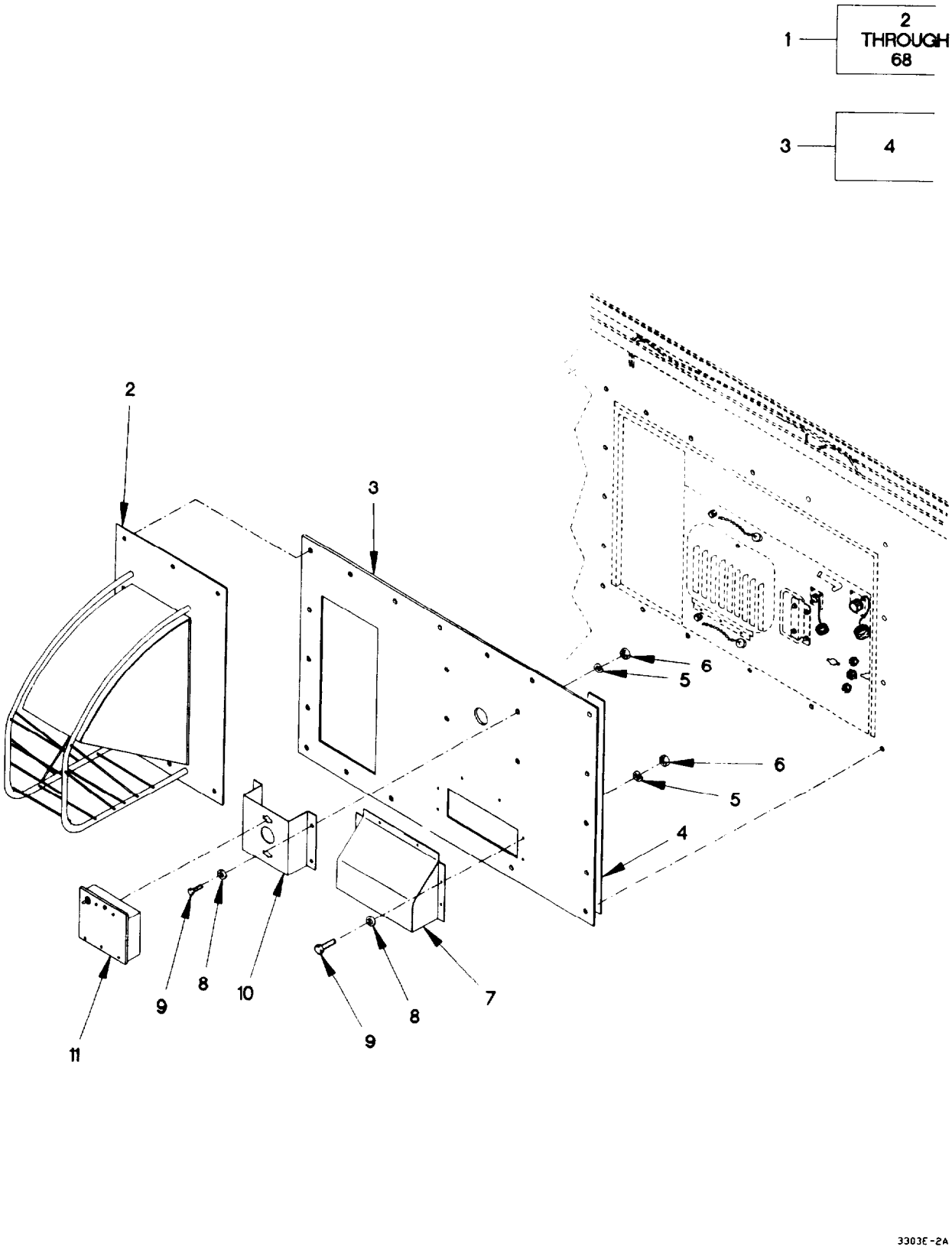

Figure 266. Van Heater Kit (Sheet 1 of 8)

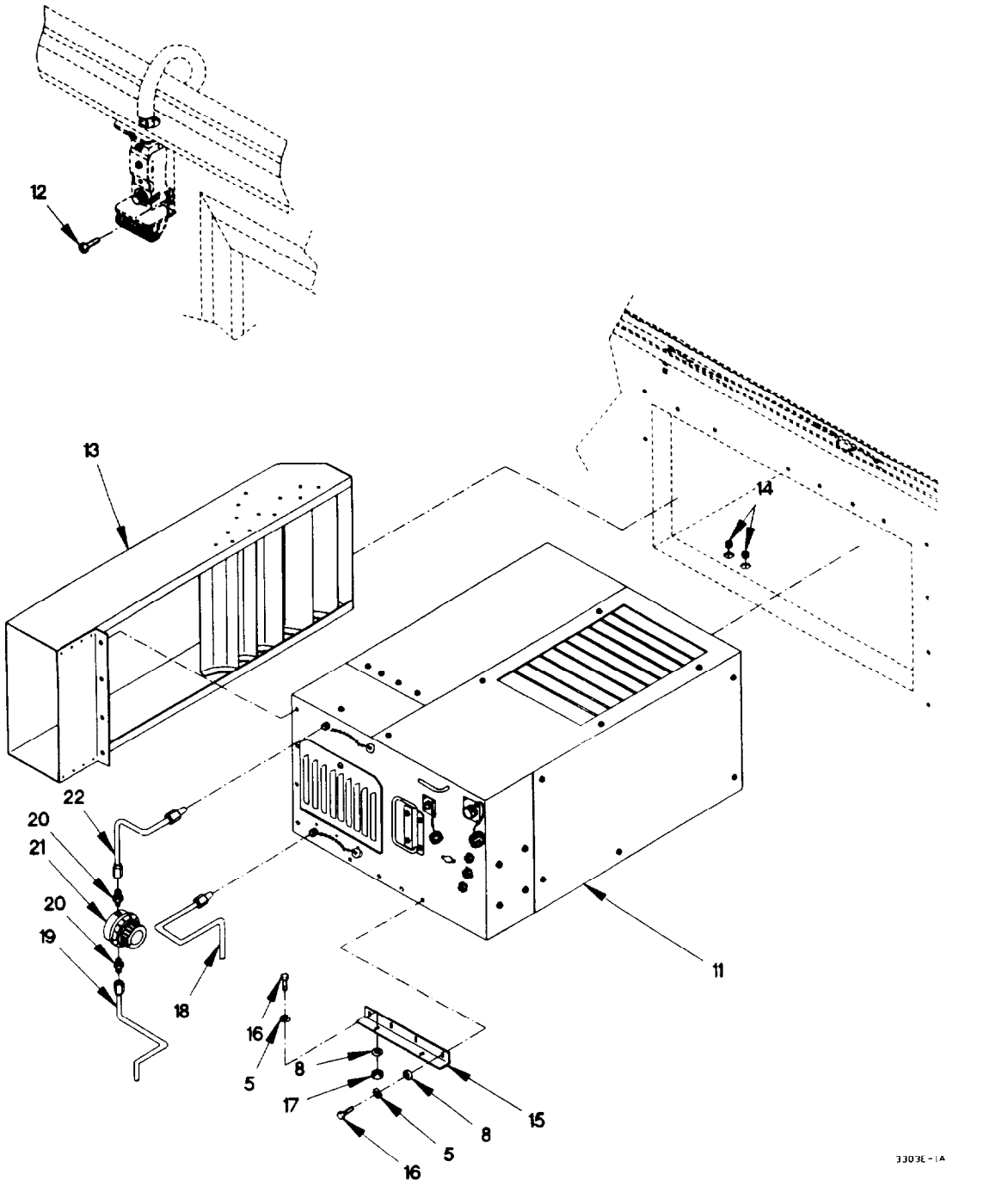

Figure 266. Van Heater Kit (Sheet 2 of 8)

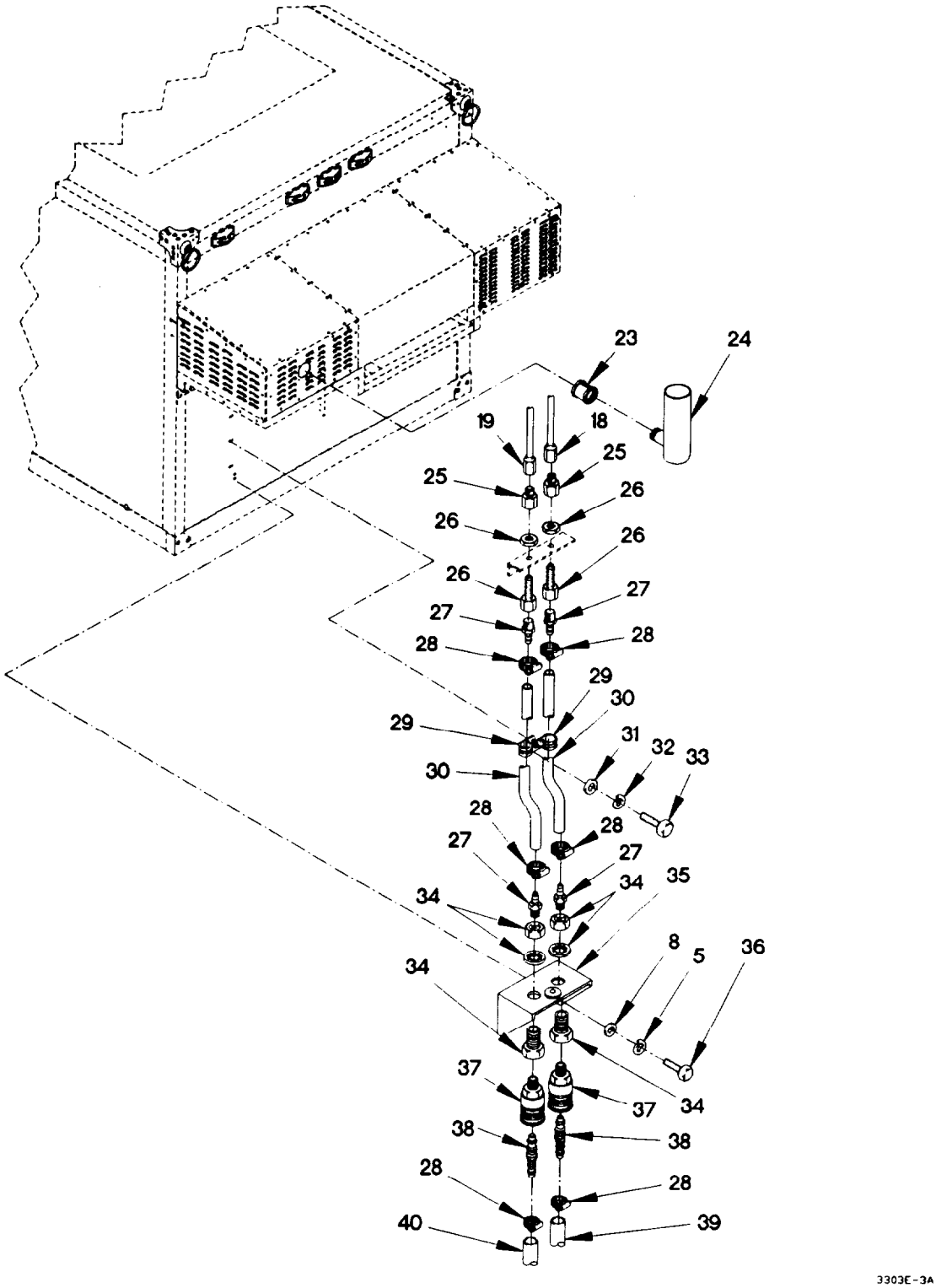

Figure 266. Van Heater Kit (Sheet 3 of 8)

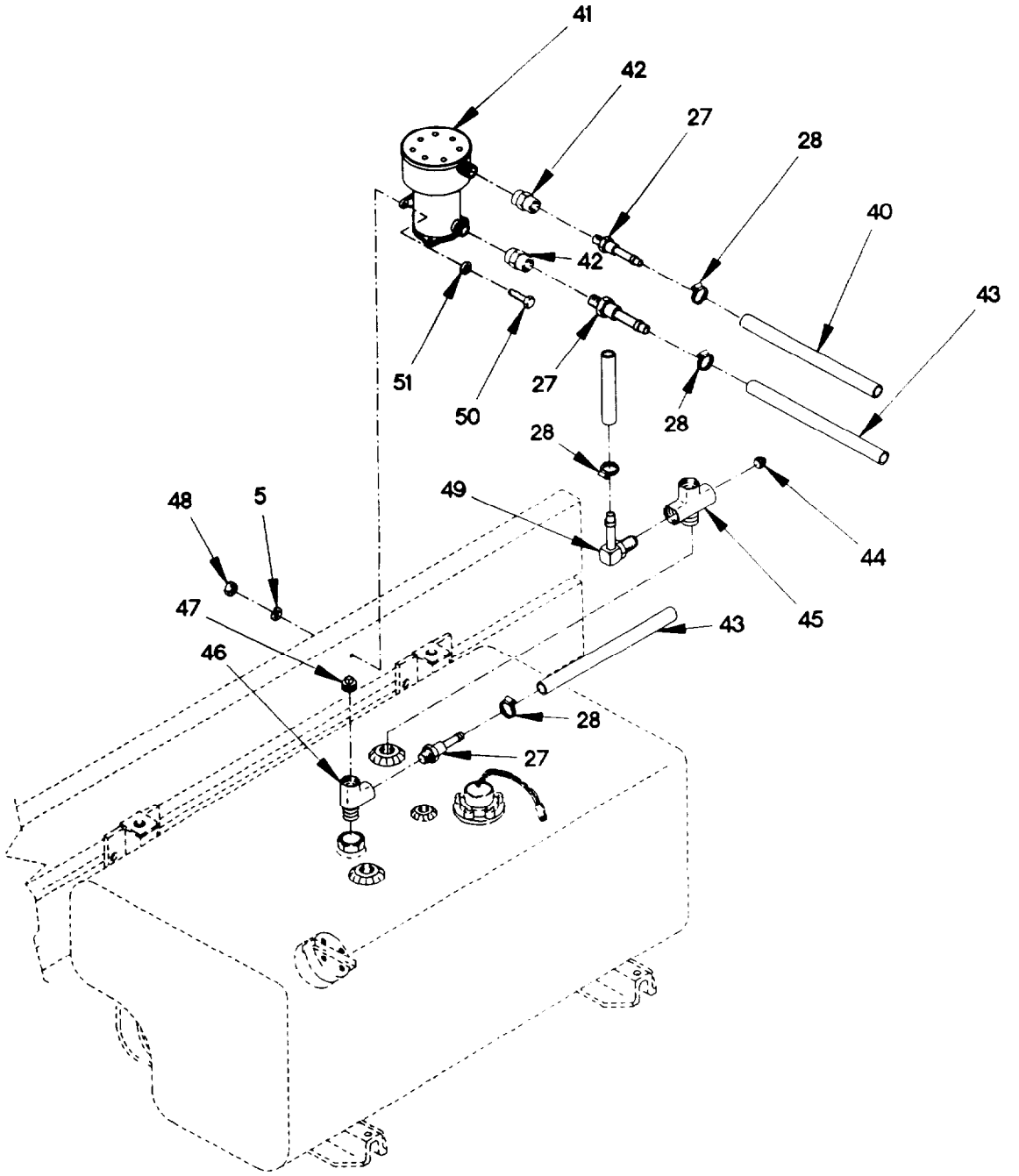

Figure 266. Van Heater Kit (Sheet 4 of 8)

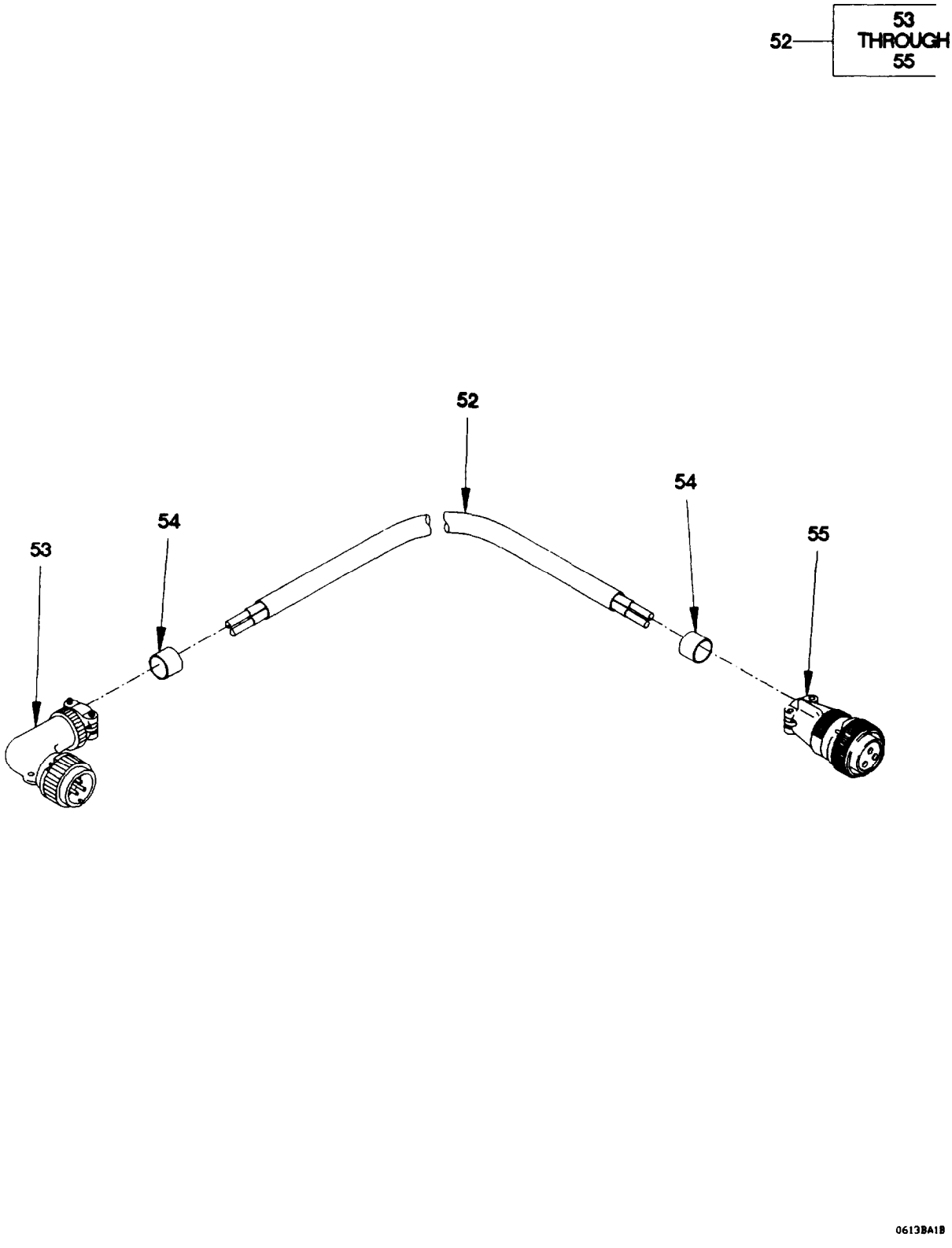

Figure 266. Van Heater Kit (Sheet 5 of 8)

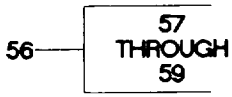

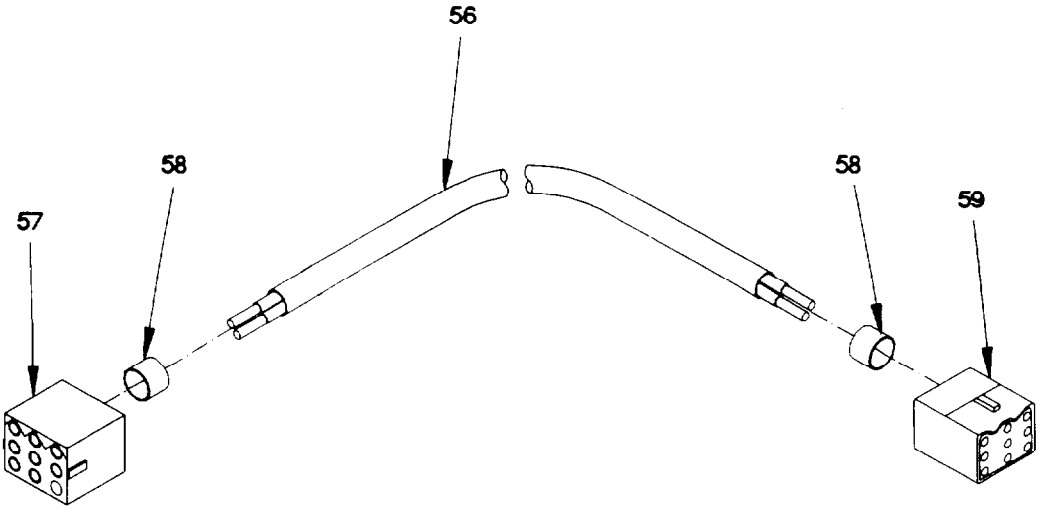

Figure 266. Van Heater Kit (Sheet 6 of 8)

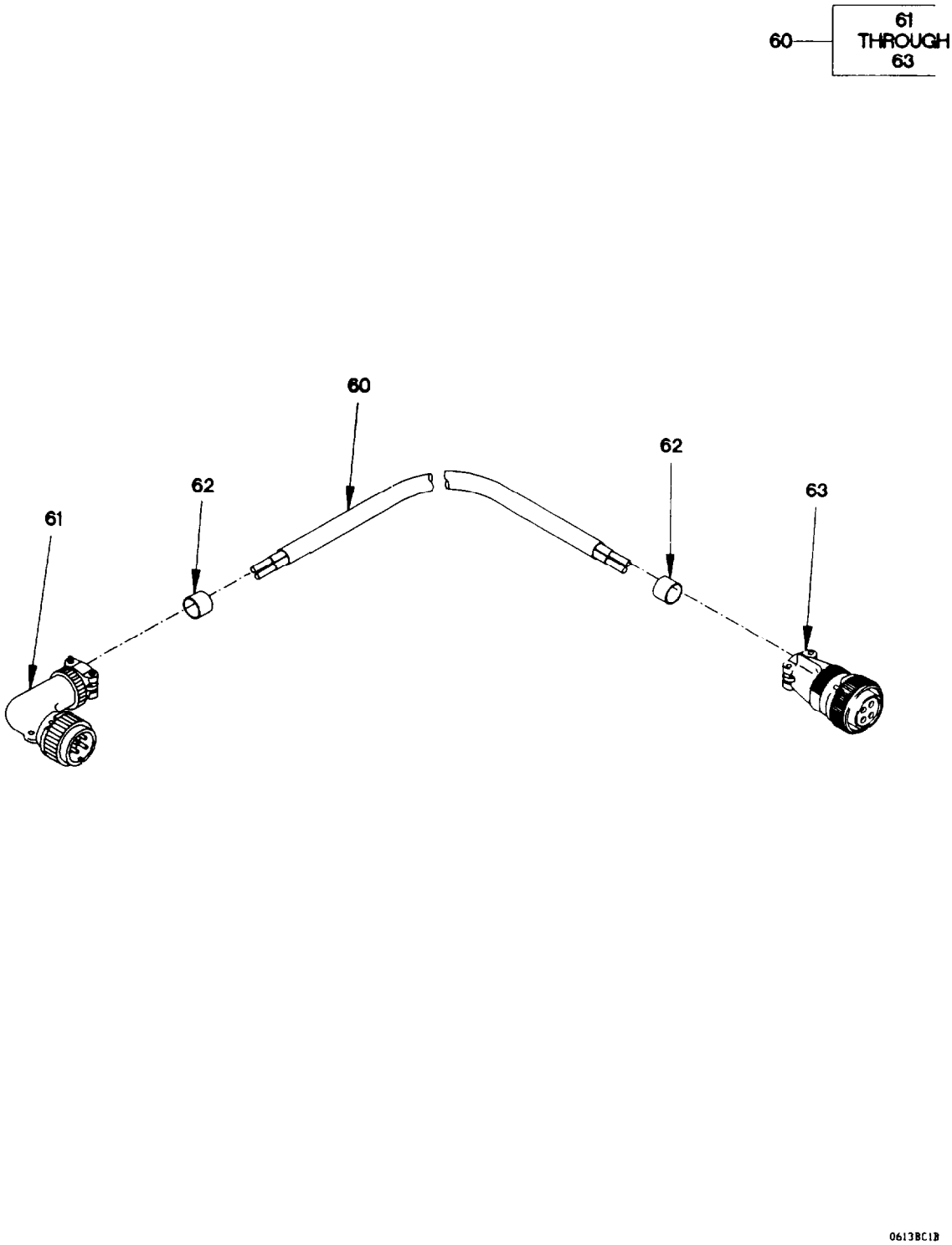

Figure 266. Van Heater Kit (Sheet 7 of 8)

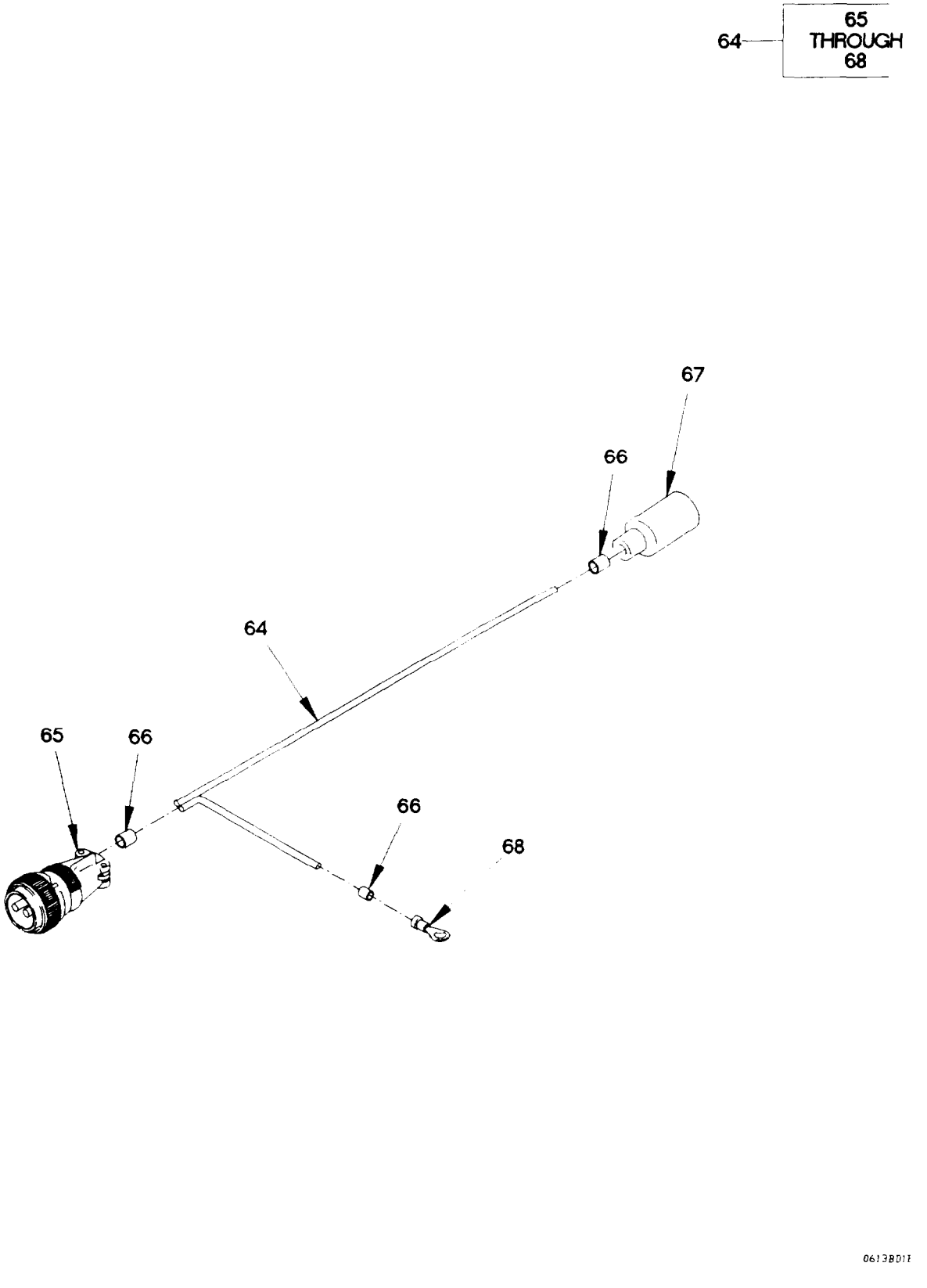

Figure 266. Van Heater Kit (Sheet 8 of 8)

(1) ITEM NO	(2) SMR CODE	(3) FSCM	(4) PART NUMBER	(5) DESCRIPTION AND USABLE ON CODE (UOC)		(6) QTY
				GROUP 3303: WINTERIZATION KITS		
				FIG. 266 VAN HEATER KIT		
1	PDOZZ	19207	57K1948	KIT, HEATER, VAN		1
				UOC: LAD, LWD,		
2	PAOZZ	19207	12421569	.DEFLECTOR, HEAT		1
				UOC: LAD, LWD,		
3	KFOZZ	19207	12421602	.COVER INSIDE		1
				UOC: LAD, LWD,		
4	PAOZZ	71643	100SX	. .TAPE, ADHESIVE	V	
				UOC: LAD, LWD,		
5	PAOZZ	96906	MS35338-139	.WASHER, LOCK		18
				UOC: LAD, LWD,		
6	PAOZZ	96906	MS35649-2254	.NUT, PLAIN, HEXAGON 1/4 X 16		10
				UOC: LAD, LWD,		
7	PAOZZ	19207	12421599	.HOOD		1
				UOC: LAD, LWD,		
8	PAOZZ	96906	MS15795-809	.WASHER, FLAT		16
				UOC: LAD, LWD,		
9	PAOZZ	96906	MS35307-303	.SCREW, CAP, HEXAGON H 1/4-20 X 1/2		10
				UOC: LAD, LWD,		
10	PAOZZ	19207	12431539	.BRACKET, HEATER CONT		1
				UOC: LAD, LWD,		
11	PAOZZ	19207	12421678	.HEATER		1
				UOC: LAD, LWD,		
12	PAOZZ	19207	12414310-026	.SCREW, TAPPING M3.5 X 19		2
				UOC: LAD, LWD,		
13	PAOZZ	19207	12421538	.DUCT, HEATER		1
				UOC: LAD, LWD,		
14	PAOZZ	96906	MS35489-94	.GROMMET, NONMETALLIC		2
				UOC: LAD, LWD,		
15	PAOZZ	19207	12421601	.BRACKET, MOUNT, HEATER		2
				UOC: LAD, LWD,		
16	PAOZZ	96906	MS35308-308	.SCREW, CAP, HEXAGON H		4
				UOC: LAD, LWD,		
17	PAOZZ	96906	MS21044C4	.NUT, SELF-LOCKING, HE 1/4 X 28		4
				UOC: LAD, LWD,		
18	PAOZZ	19207	12421590-003	.TUBE, FUEL		1
				UOC: LAD, LWD,		
19	PAOZZ	19207	12421590-001	.TUBE, FUEL		1
				UOC: LAD, LWD,		
20	PAOZZ	81343	4-2 010102S	.ADAPTER, STRAIGHT, PI		2
				UOC: LAD, LWD,		
21	PAOZZ	72850	60001	.REGULATOR, FUEL		1
				UOC: LAD, LWD,		
22	PAOZZ	19207	12421590-002	.TUBE, FUEL		1
				UOC: LAD, LWD,		

(1) ITEM NO	(2) SMR CODE	(3) FSCM	(4) PART NUMBER	(5) DESCRIPTION AND USABLE ON CODE (UOC)	(6) QTY
23	PAOZZ	0FW39	12422289	.COUPLING 2 IN UOC: LAD, LWD,	1
24	PAOZZ	0FW39	12422274	.PIPE, HEATER EXHAUST UOC: LAD, LWD,	1
25	PAOZZ	81343	6-4 070123BA	.REDUCER, TUBE UOC: LAD, LWD,	2
26	PAOZZ	81343	6-4 070603BA	.ADAPTER UOC: LAD, LWD,	2
27	PAOZZ	81343	6-4 430160BA	.FITTING, HOSE UOC: LAD, LWD,	7
28	PAOZZ	81343	SAE J1508-06	.CLAMP, HOSE UOC: LAD, LWD,	10
29	PAOZZ	96906	MS21919WCH10	.CLAMP, LOOP UOC: LAD, LWD,	6
30	MOOZZ	81349	M13444T1.375X72	.HOSE, NONMETALLIC MAKE FROM HOSE P/N 2565-6 (00624) X 72IN.LONG UOC: LAD, LWD,	2
31	PAOZZ	28527	2616950G001	.WASHER, FLAT #10 UOC: LAD, LWD,	4
32	PAOZZ	96906	MS35338-138	.WASHER, LOCK #10 UOC: LAD, LWD,	4
33	PAOZZ	96906	MS51958-63	.SCREW, MACHINE 10-32 X 1/2 UOC: LAD, LWD,	4
34	PAOZZ	93061	207ACBH-4	.COUPLING, PIPE UOC: LAD, LWD,	2
35	PAOZZ	19207	12416350	.BRACKET, FUEL LINE UOC: LAD, LWD,	1
36	PAOZZ	96906	MS35307-306	.SCREW, CAP, HEXAGON H 3/4 X 20 UOC: LAD, LWD,	2
37	PAOZZ	30780	14C	.COUPLER UOC: LAD, LWD,	2
38	PAOZZ	30780	H5EP	.NIPPLE, QUICK DISCON UOC: LAD, LWD,	2
39	MOOZZ	81349	M13444T1.375X23	.HOSE, NONMETALLIC MAKE FROM HOSE P/N: 2565-6 (00624) X 23IN.LONG UOC: LAD, LWD,	1
40	MOOZZ	81349	M13444T1.375X30	.HOSE, NONMETALLIC MAKE FROM HOSE P/N: 2565-6 (00624) X 30IN.LONG UOC: LAD, LWD,	1
41	PAOZZ	96906	M51321-2-24H1	.PUMP, FUEL UOC: LAD, LWD,	1
42	PAOZZ	81343	4-4 130138B	.COUPLING, PIPE UOC: LAD, LWD,	2
43	MOOZZ	81349	M13444T1.375X14	.HOSE, NONMETALLIC MAKE FROM HOSE P/N: 2565-6 (00624) X 14IN.LONG UOC: LAD, LWD,	1
44	PAOZZ	81343	6 130109NC	.PLUG, PIPE UOC: LAD, LWD,	1
45	PAOZZ	0TE27	5655-06-06-06-06	.FITTING, CROSS UOC: LAD, LWD,	1

(1) ITEM NO	(2) SMR CODE	(3) FSCM	(4) PART NUMBER	(5) DESCRIPTION AND USABLE ON CODE (UOC)	(6) QTY
46	PAOZZ	81343	4-4-4 140424C	.TEE, PIPE UOC: LAD, LWD,	1
47	PAOZZ	81343	4 130109C	.PLUG, PIPE UOC: LAD, LWD,	1
48	PAOZZ	96906	MS51967-2	.NUT, PLAIN, HEXAGON 3/8-20 UOC: LAD, LWD,	2
49	PAOZZ	81343	6-4 430260B	.ELBOW, PIPE TO HOSE UOC: LAD, LWD,	1
50	PAOZZ	80204	B1821BH025C100N	.SCREW, CAP, HEXAGON H 1/4-20 X 1 UOC: LAD, LWD,	2
51	PAOZZ	96906	MS15795-810	.WASHER, FLAT UOC: LAD, LWD,	4
52	PAOOO	19207	12421504-001	.CABLE ASSEMBLY, HEATER POWER UOC: LAD, LWD,	1
53	PAOZZ	96906	MS3108R14S7P	. .CONNECTOR, PLUG, ELEC UOC: LAD, LWD,	1
54	PAOZZ	81349	M43436/1-3	. .BAND, MARKER UOC: LAD, LWD,	2
55	PAOZZ	96906	MS3106F14S-7S	. .CONNECTOR, PLUG, ELEC UOC: LAD, LWD,	1
56	PAOZZ	19207	12421504-002	.CABLE ASSEMBLY, HEATER CONTROL UOC: LAD, LWD,	1
57	PAOZZ	58536	A-A-55464-05	. .CONNECTOR BODY, PLUG UOC: LAD, LWD,	1
58	PAOZZ	81349	M43436/1-3	. .BAND, MARKER UOC: LAD, LWD,	2
59	PAOZZ	58536	A-A-54463-05	. .CONNECTOR BODY, RECE UOC: LAD, LWD,	1
60	PAOOO	19207	12421504-003	.CABLE ASSEMBLY, THERMOSTAT UOC: LAD, LWD,	1
61	PAOZZ	96906	MS3108E18-10S	. .CONNECTOR, PLUG, ELEC UOC: LAD, LWD,	1
62	PAOZZ	81349	M43436/1-3	. .BAND, MARKER UOC: LAD, LWD,	2
63	PAOZZ	96906	MS3106E18-10P	. .CONNECTOR, PLUG, ELEC UOC: LAD, LWD,	1
64	PAOOO	19207	12421504-004	.CABLE ASSEMBLY, FUEL PUMP POWER UOC: LAD, LWD,	1
65	PAOZZ	96906	MS310614S9P	. .CONNECTOR, PLUG, ELEC UOC: LAD, LWD,	1
66	PAOZZ	81349	M43436/1-1	. .BAND, MARKER UOC: LAD, LWD,	3
67	PAOZZ	96906	MS27144-2	. .CONNECTOR, PLUG, ELEC UOC: LAD, LWD,	1
68	PAOZZ	06383	14-14F	. .TERMINAL, LUG UOC: LAD, LWD,	1

END OF FIGURE

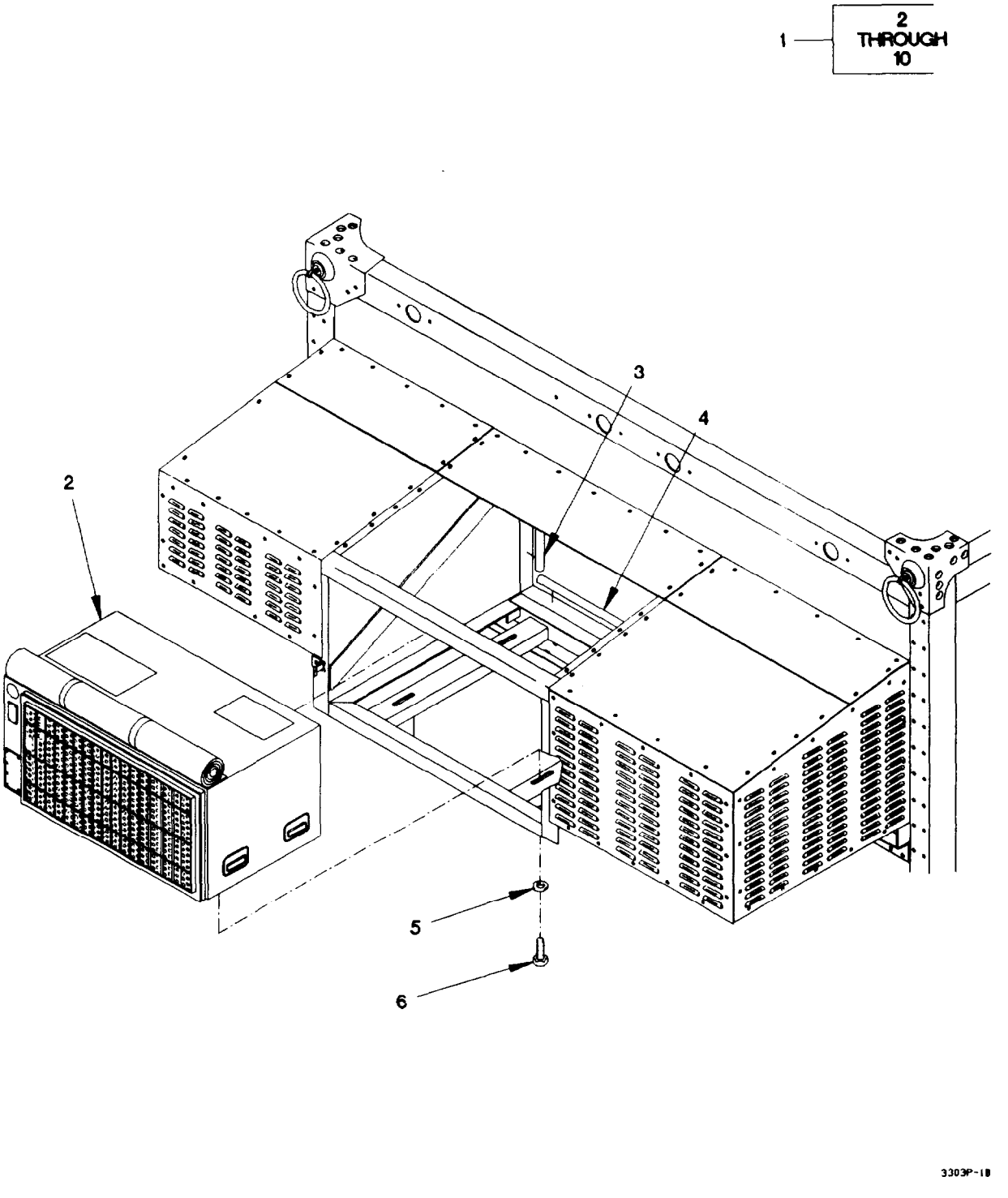

Figure 267. Van Air Conditioner Kit (Sheet 1 of 2)

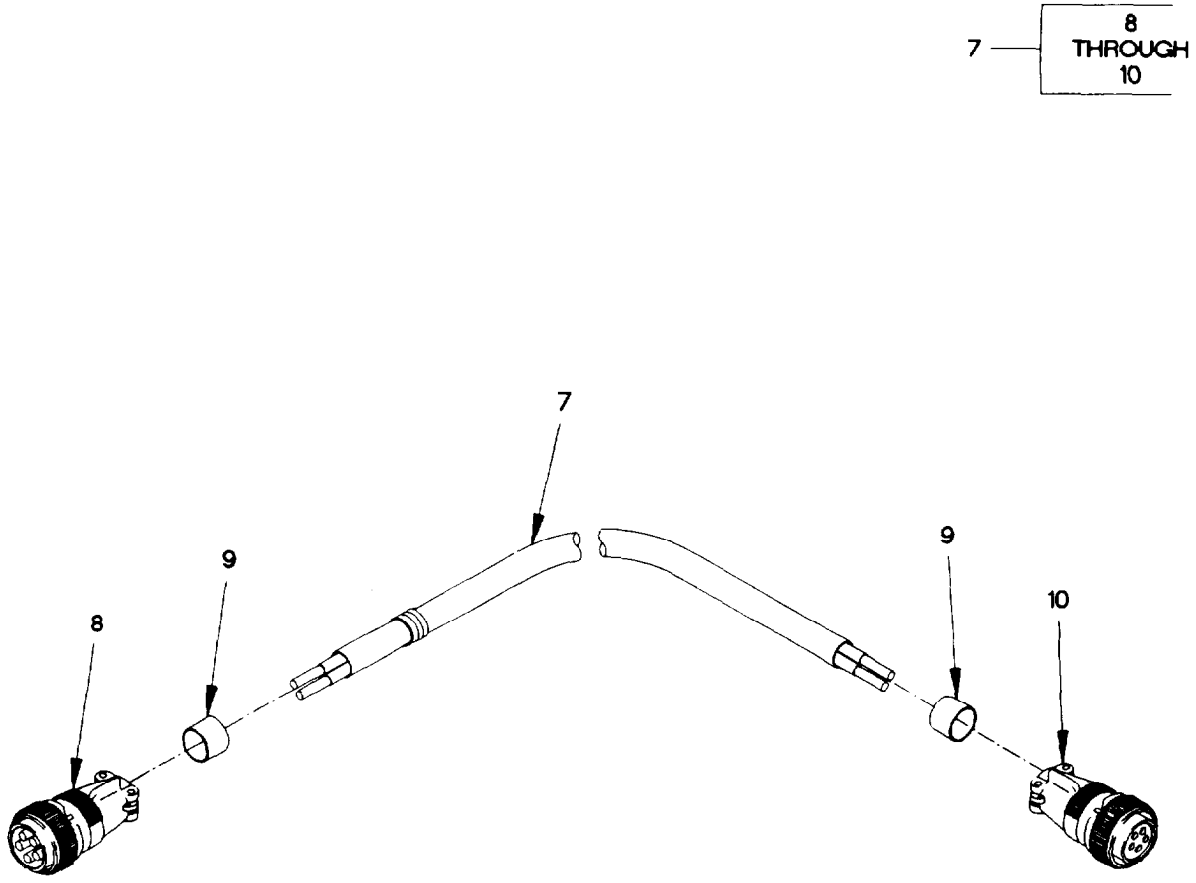

Figure 267. Van Air Conditioner Kit (Sheet 2 of 2)

(1) ITEM NO	(2) SMR CODE	(3) FSCM	(4) PART NUMBER	(5) DESCRIPTION AND USABLE ON CODE (UOC)	(6) QTY
				GROUP 3303: WINTERIZATION KITS FIG. 267 VAN AIR CONDITIONER KIT	
1	PDOZZ	19207	57K1947	KIT, AIR CONDITIONER UOC: LAD, LWD,	1
2	PAOZZ	81349	MIL-A-52767D	.AIR CONDITIONER TYPE II, CL B2 UOC: LAD, LWD,	1
3	PAOZZ	19207	12416646-002	.SEAL MAKE FROM RUBBER SEAL P/N: 2418974-1 (49761) X 21 IN UOC: LAD, LWD,	2
4	PAOZZ	19207	12416646-001	.SEAL MAKE FROM RUBBER SEAL P/N: 2418974-1 (49761) X 31 IN UOC: LAD, LWD,	2
5	PAOZZ	88044	AN970-6	.WASHER, FLAT UOC: LAD, LWD,	4
6	PAOZZ	96906	MS90726-64	.SCREW, CAP, HEXAGON H 3/8-24 X 1 1/2 UOC: LAD, LWD,	4
7	PAOOO	19207	12416641	.CABLE ASSEMBLY UOC: LAD, LWD,	1
8	PAOZZ	96906	MS3106R18-11P	. .CONNECTOR, PLUG, ELEC UOC: LAD, LWD,	1
9	PAOZZ	81349	M43436/1-3	. .BAND, MARKER UOC: LAD, LWD,	2
10	PAOZZ	96906	MS3106F18-11S	. .CONNECTOR, PLUG, ELEC UOC: LAD, LWD,	1
				END OF FIGURE	

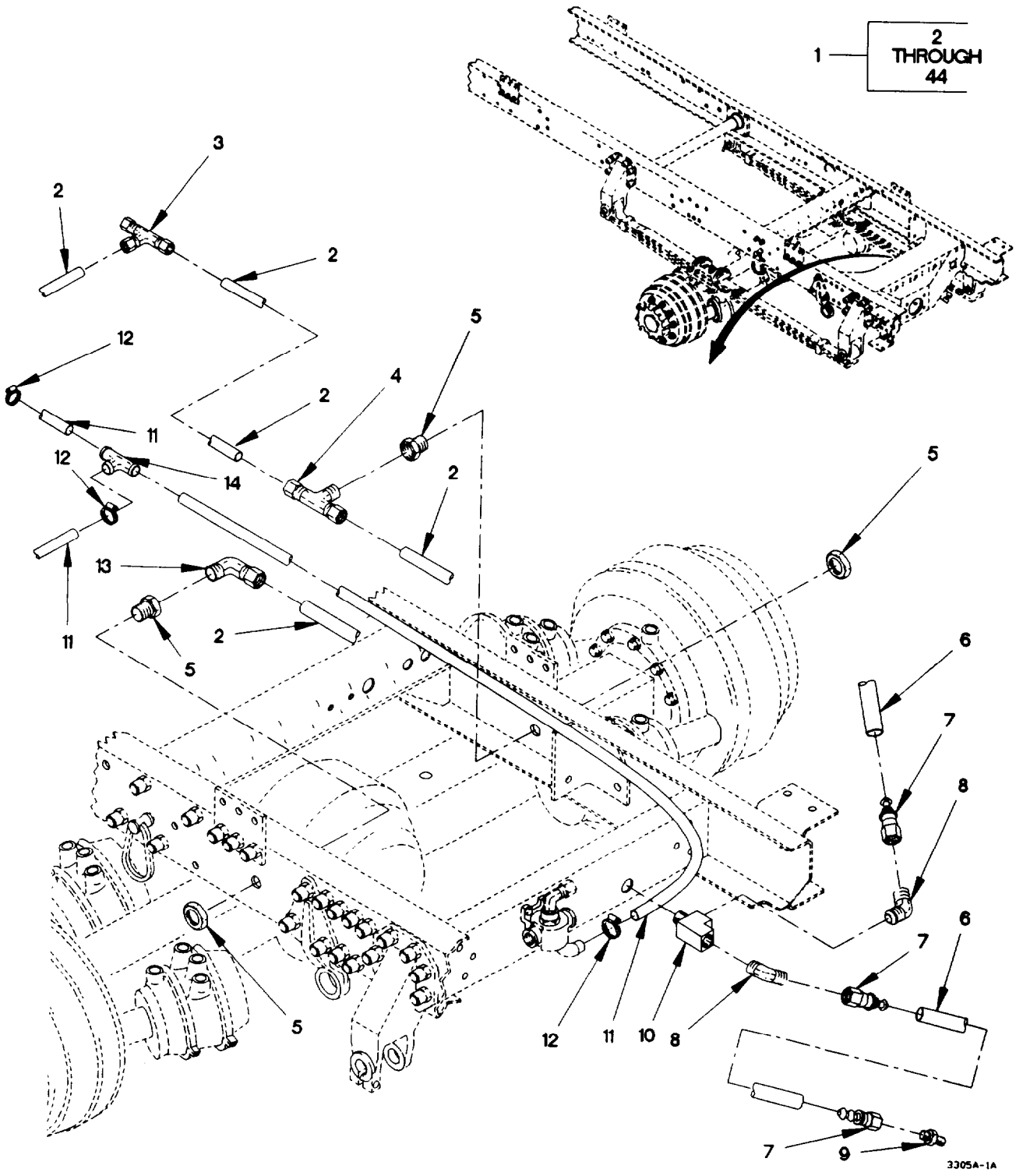

Figure 268. Fording Kit (Sheet 1 of 6)

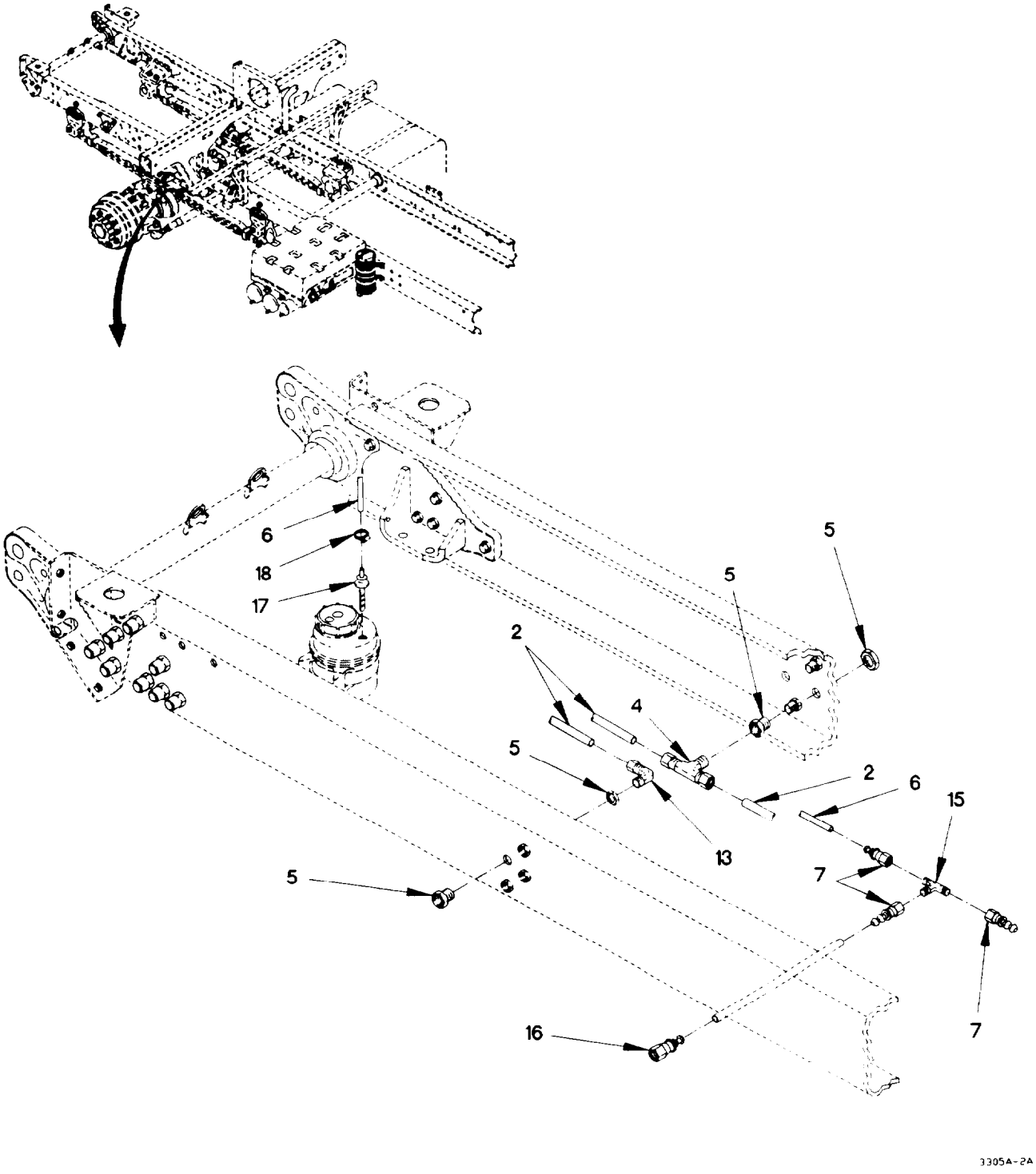

Figure 268. Fording Kit (Sheet 2 of 6)

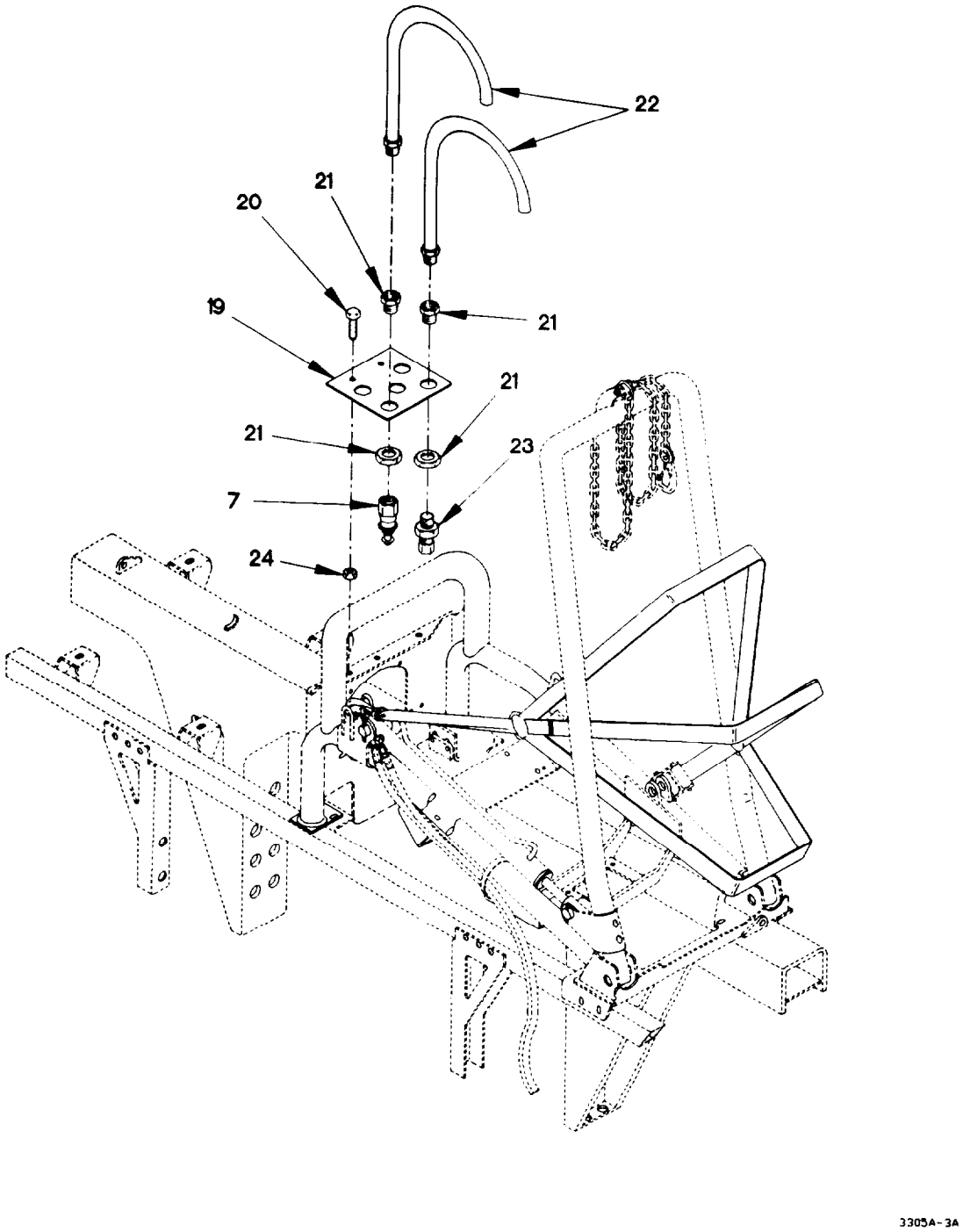

Figure 268. Fording Kit (Sheet 3 of 6)

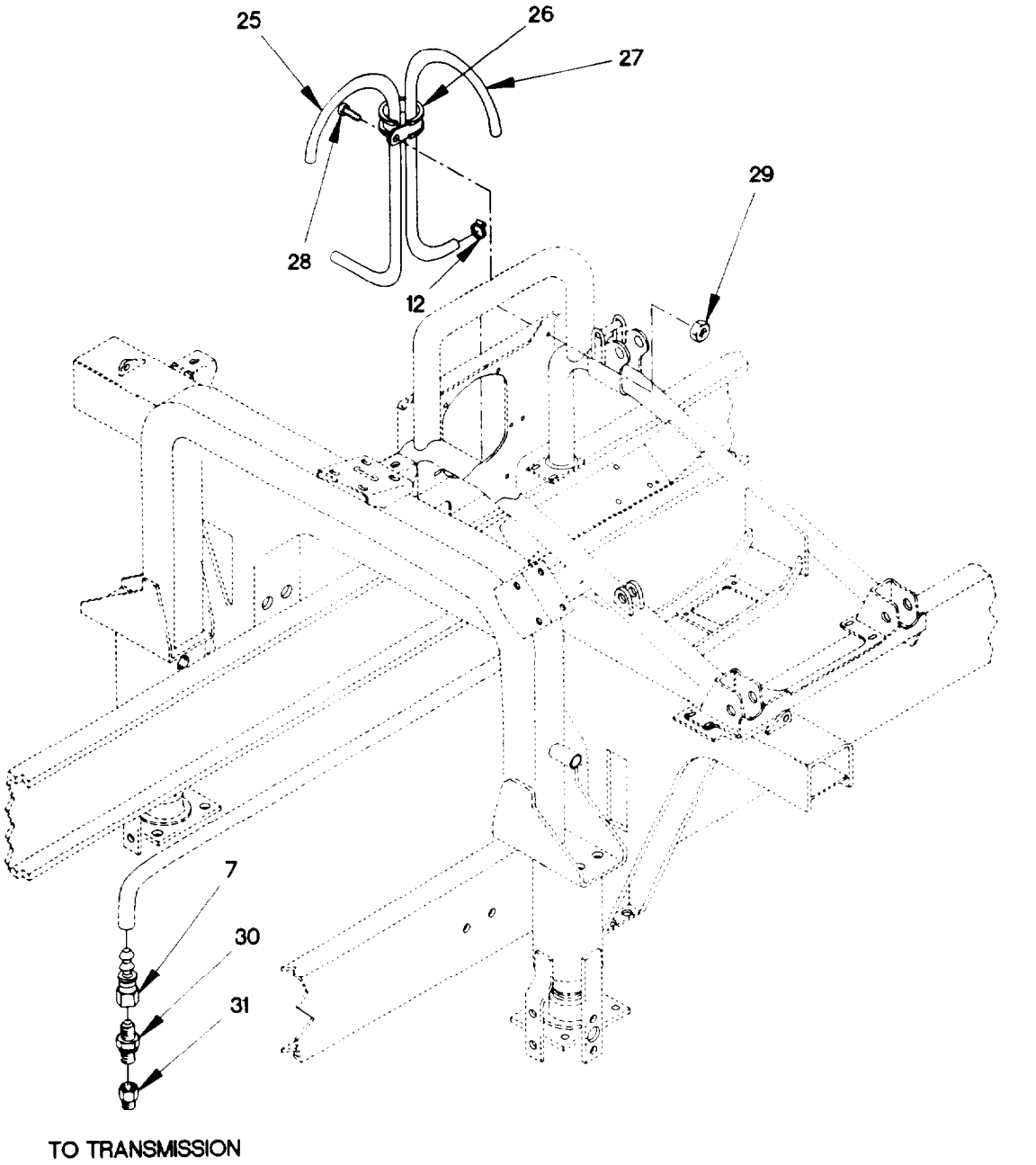

Figure 268. Fording Kit (Sheet 4 of 6)

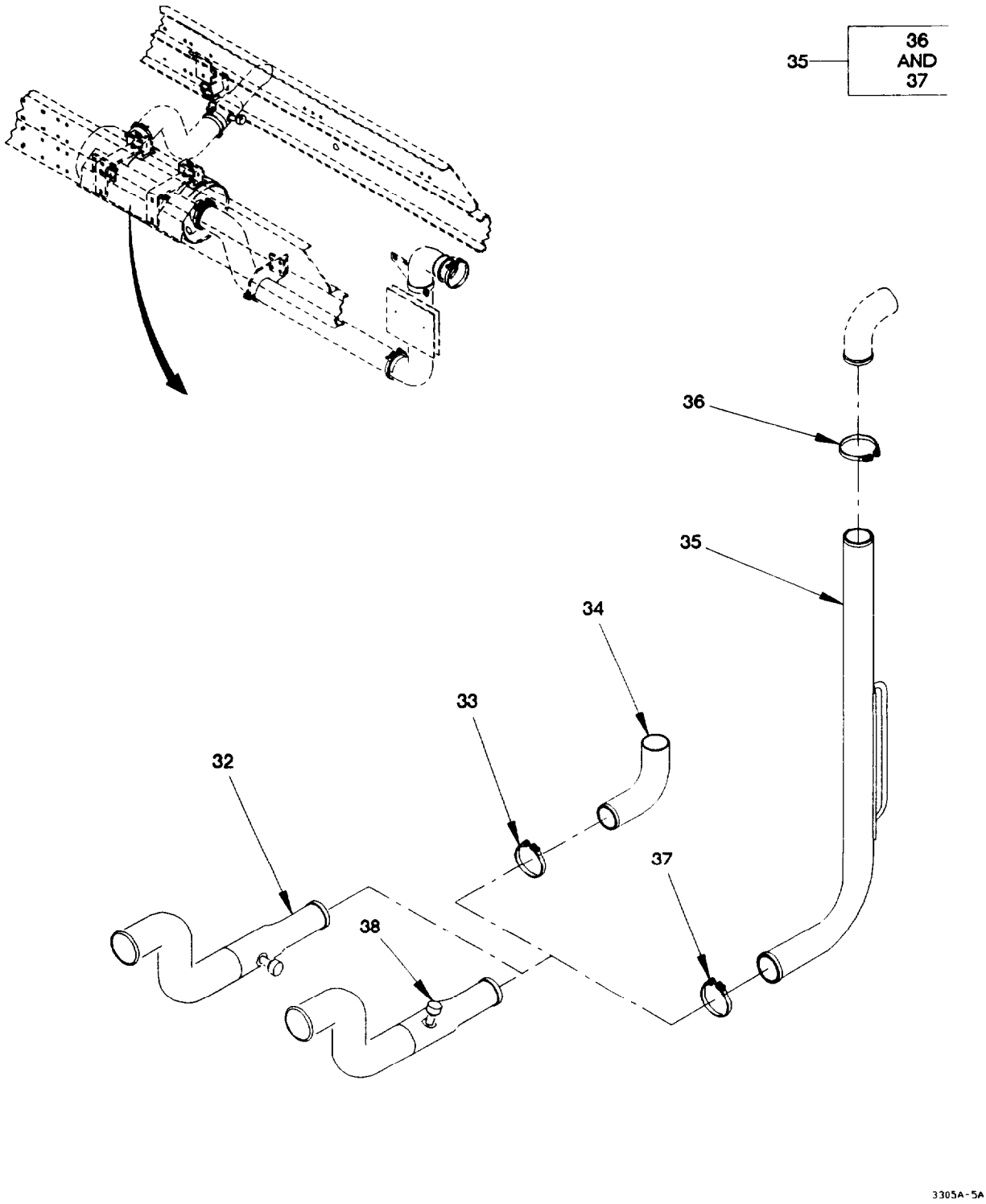

Figure 268. Fording Kit (Sheet 5 of 6)

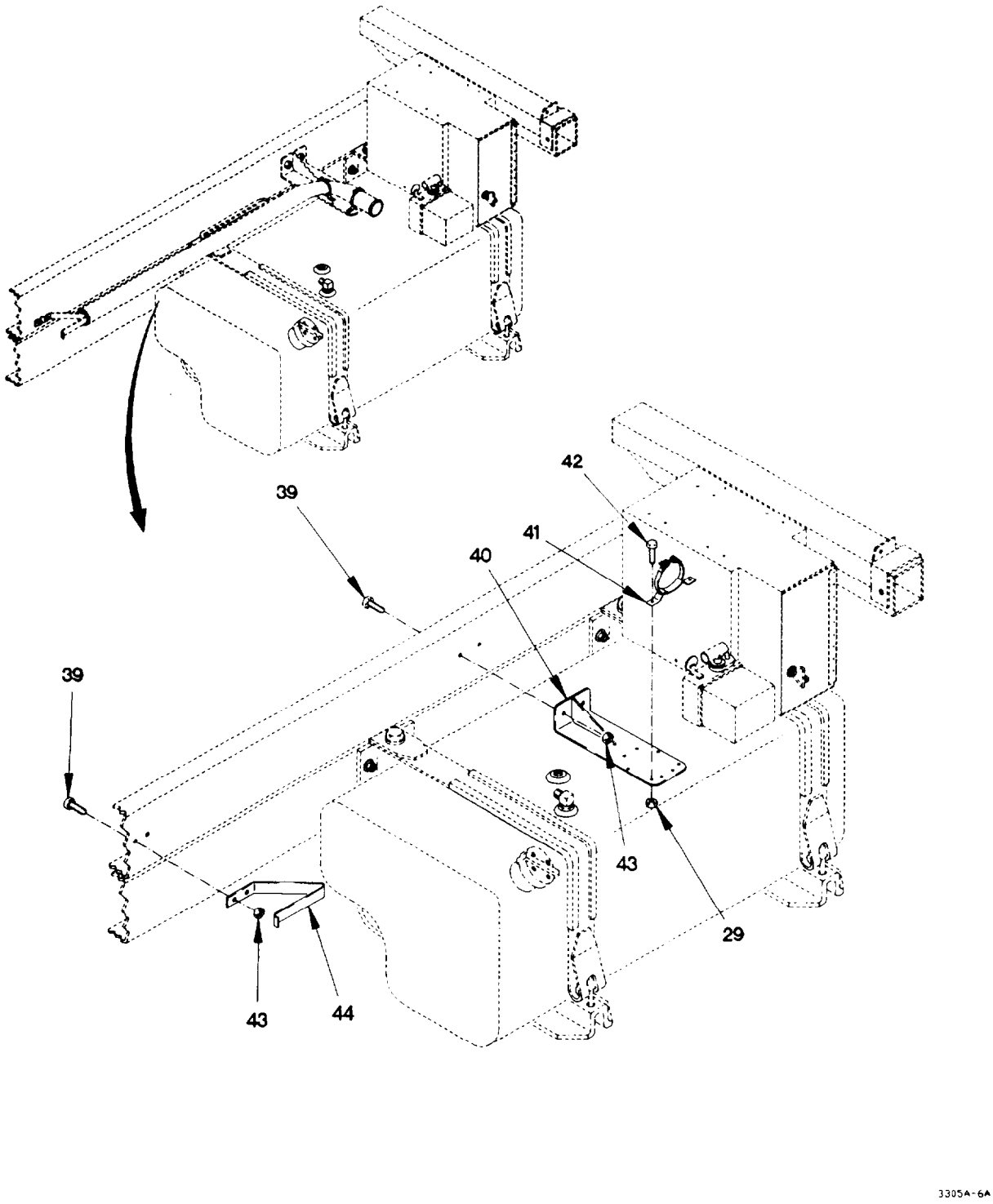

Figure 268. Fording Kit (Sheet 6 of 6)

(1) ITEM NO	(2) SMR CODE	(3) FSCM	(4) PART NUMBER	(5) DESCRIPTION AND USABLE ON CODE (UOC)		(6) QTY
				GROUP 3305: DEEP WATER FORDING KITS		
				FIG. 268 FORDING KIT		
1	PDOZZ	19207	57K1903	WATERPROOFING KIT, V		1
2	MOOZZ	19207	12420572-006X	.TUBE, NONMETALLIC MAKE FROM HOSE	V	
				P/N: J844TYBSIZE 3/8 BLACK (81343),		
				CUT TO LENGTH		
3	PAOZZ	93061	144F-6	.TEE, TUBE		1
4	PAOZZ	81343	6-6-6 100425BA	.TEE, PIPE TO TUBE		2
5	PAOZZ	96906	MS14315-4	.BUSHING, PIPE		4
6	MOOZZ	81349	M13444T1.250	.HOSE, NONMETALLIC MAKE FROM HOSE	V	
				P/N: 483666 (49185), CUT TOLENGTH		
7	PAOZZ	0TE27	7207-0663-5	.ADAPTER, STRAIGHT, TU		8
8	PAOZZ	93061	159F-4-4	.ELBOW, PIPE TO TUBE		2
9	PAOZZ	81343	4-6-010102B	.ADAPTER, STRAIGHT, PI		1
10	PAOZZ	81343	4-4-4 130424B	.TEE, PIPE		1
11	MOOZZ	81343	SAE100R4-16	.HOSE, NONMETALLIC MAKE FROM HOSE	V	
				P/N: 881-16 (98441), CUT TO LENGTH		
12	PAOZZ	7Z588	9420	.CLAMP, HOSE		7
13	PAOZZ	81343	6-6 100202BA	.ELBOW, PIPE TO TUBE		2
14	PAOZZ	8R302	0384-5-78	.NONMETALLIC TEE SEC		1
15	PAOZZ	81343	4-4-4 010401BA	.TEE, TUBE		1
16	PAOZZ	0TE27	7207-86552	.ADAPTER, STRAIGHT, TU		1
17	PAOZZ	0LEB5	7632 319 114	.GAGE ROD, LIQUID LEV		1
18	PAOZZ	88907	B54-32780	.CLAMP, HOSE		1
19	PAOZZ	19207	12419260	.BRACKET, MOUNTING		1
20	PAOZZ	75755	19M7866	.BOLT, MACHINE M8 X 1.25 X 20		2
21	PAOZZ	93061	207ACBH-6	.COUPLING, PIPE		4
22	PAOZZ	19207	12419802	.TUBE ASSEMBLY, METAL		4
23	PAOZZ	79470	1468X6X6	.ADAPTER, STRAIGHT, PI		1
24	PAOZZ	19207	12414308-018	.NUT, SELF-LOCKING, EX M8 X 1.25		2
25	PAOZZ	19207	12420463-002	.HOSE, METALLIC CTIS VENT		1
26	PAOZZ	18076	S630H-24	.CLAMP, LOOP, HVY DUTY		1
27	PAOZZ	19207	12420463-001	.TUBE, VENT ENGINE BREATHER		1
28	PAOZZ	56161	10503805	.SCREW, CAP, HEXAGON H M6 X 1 X 20		1
29	PAOZZ	19207	12414308-002	.NUT, SELF-LOCKING, EX M6 X 1		5
30	PAOZZ	0TE27	JM0412	.ADAPTER, STRAIGHT, TU		1
31	PAOZZ	73342	29502386	.BUSHING, PIPE		1
32	AOOOO	19207	12419191-001	.EJECTOR ASSEMBLY, EX		1
				UOC: LAA, LAB, LAD, LWB, LWD,		
33	PAOZZ	18265	P20-6606	.COUPLING, CLAMP, GROO		1
34	PAOZZ	19207	12419191-003	.TUBE ASSEMBLY		1
35	PAOZZ	19207	12419284-003	.PIPE, EXHAUST		1
36	PAOZZ	06481	T-218758	. .CLAMP, HOSE		1
37	PAOZZ	63208	50257	. .CLAMP, LOOP		1
38	AOOOO	19207	12419191-004	.EJECTOR ASSEMBLY, EX		1
				UOC: LAC, LWC,		

(1) ITEM NO	(2) SMR CODE	(3) FSCM	(4) PART NUMBER	(5) DESCRIPTION AND USABLE ON CODE (UOC)	(6) QTY
39	PAOZZ	19207	12414307-040	.BOLT, MACHINE M8 X 1.25 X 40	4
40	PAOZZ	19207	12421443	.BRACKET, ANGLE	
40	PAOZZ	63208	941-062	.CLAMP, LOOP	
42	PAOZZ	19207	12414307-014	.BOLT, MACHINE M6 X 1.0 X 25	
43	PAOZZ	19207	12414308-004	.NUT, SELF-LOCKING, EX M8 X 1.25	4
44	PAOZZ	19207	12421442	.BRACKET, MOUNTING	1

END OF FIGURE

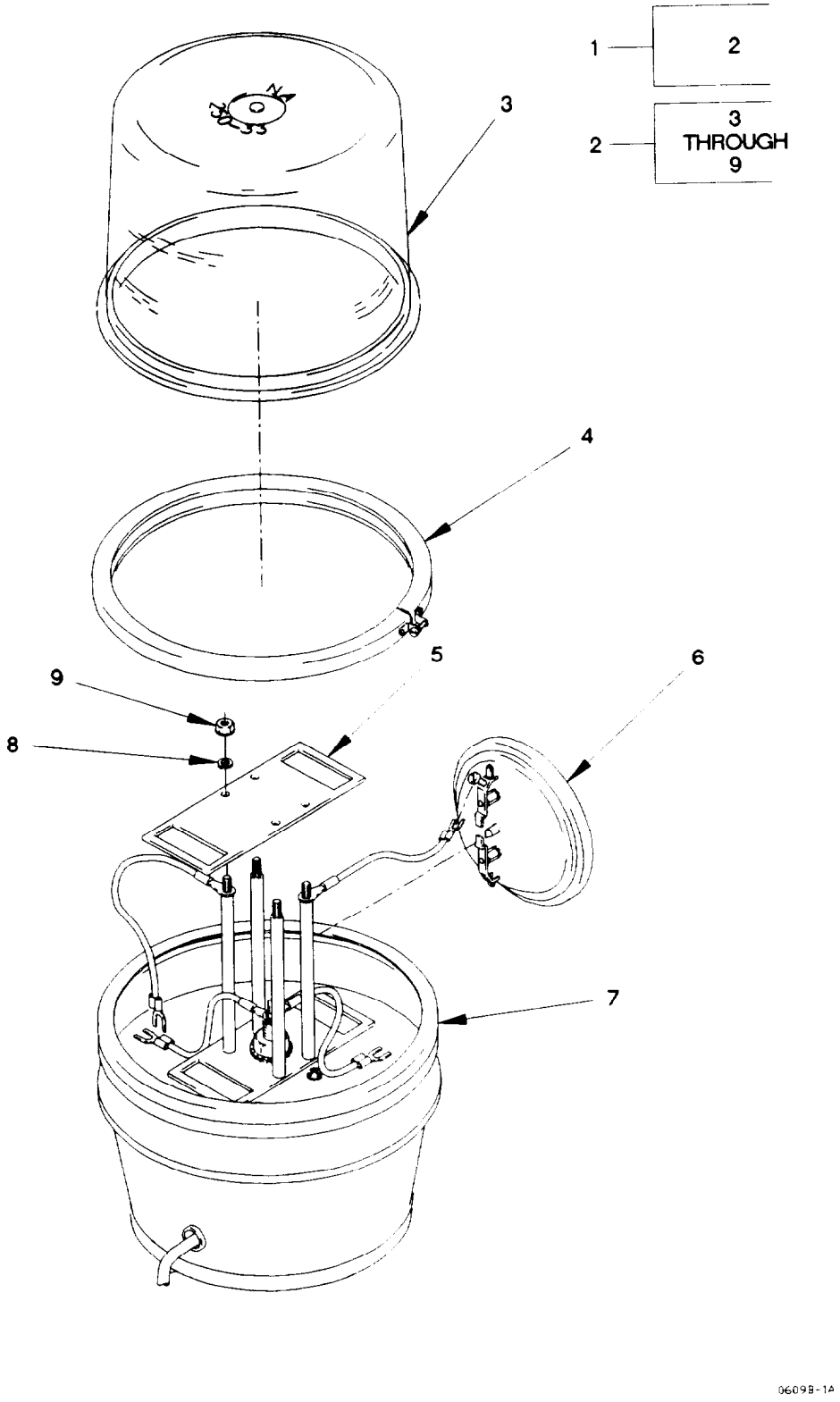

Figure 269. Amber Warning Light

(1) ITEM NO	(2) SMR CODE	(3) FSCM	(4) PART NUMBER	(5) DESCRIPTION AND USABLE ON CODE (UOC)	(6) QTY
				GROUP 3307: SPECIAL PURPOSE KITS	
				FIG. 269 AMBER WARNING LIGHT	
1	PAOZZ	0FW39	57K1220	PARTS KIT, VEHICULAR	1
2	PAOOO	0FW39	12420230	.LIGHT, WARNING	1
3	PAOZZ	11721	250-33-A	. .LENS, LIGHT	1
4	PAOZZ	11721	212-55	. .RING, RETAINING	1
5	PAOZZ	11721	212-5BH-P	. .PLATE, MOUNTING	2
6	PAOZZ	08806	4416	. .LAMP, INCANDESCENT	2
7	PAOZZ	11721	212-44	. .SEAL, PLAIN	1
8	PAOZZ	96906	MS35335-31	. .WASHER, LOCK #8	4
9	PAOZZ	96906	MS35649-282	. .NUT, PLAIN, HEXAGON #8-32	4
				END OF FIGURE	

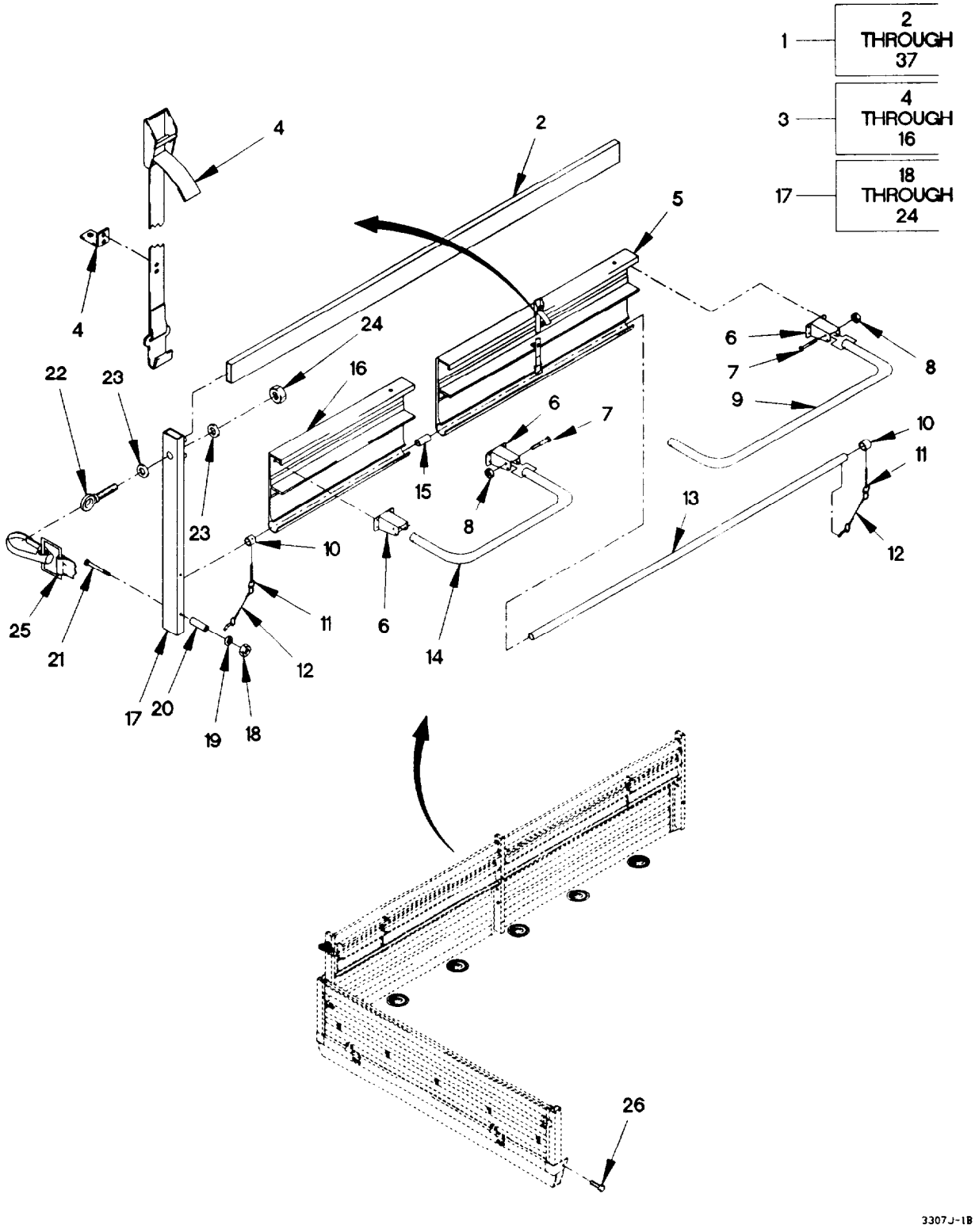

Figure 270. M1078 and M1081 Troopseat Kit (Sheet 1 of 2)

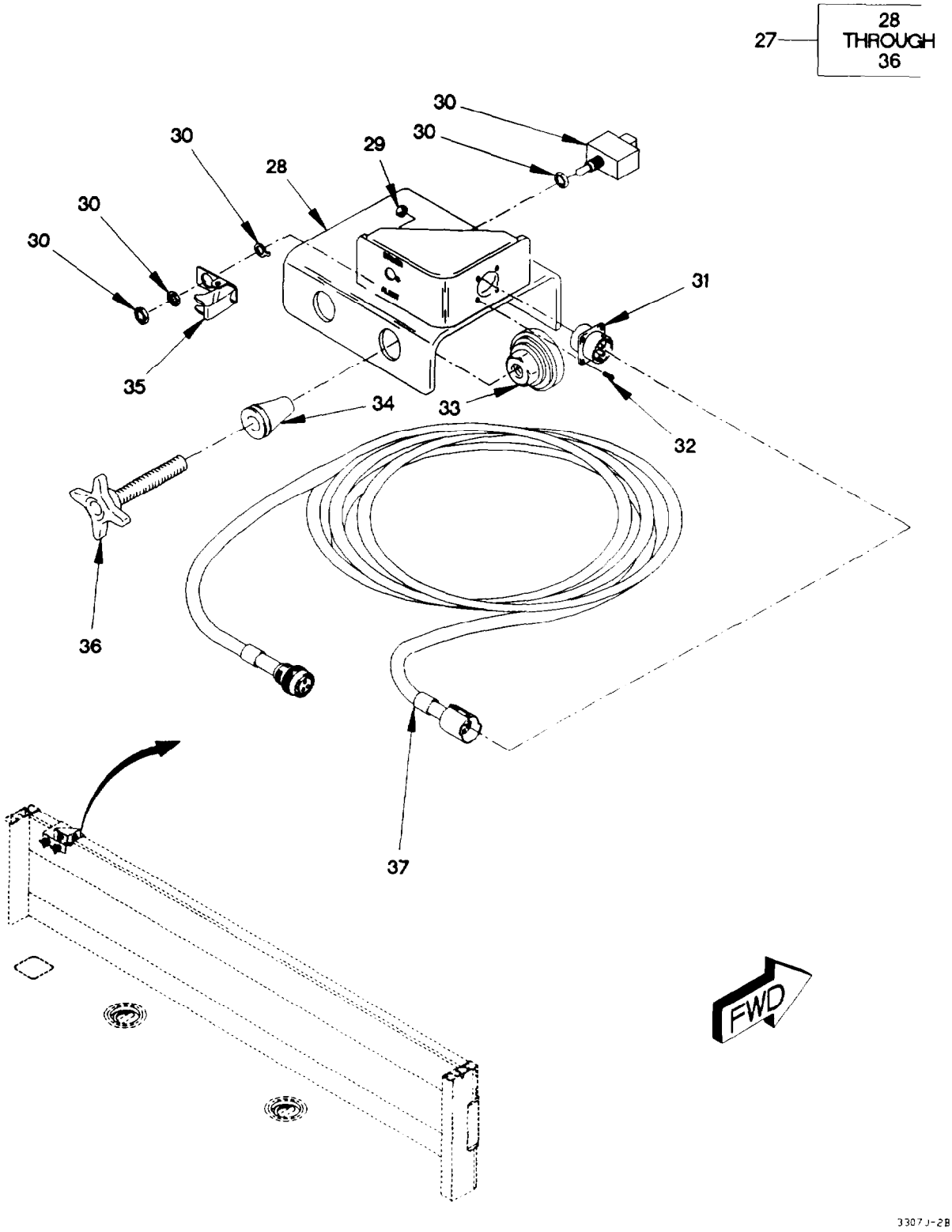

Figure 270. M1078 and M1081 Troopseat Kit (Sheet 2 of 2)

(1) ITEM NO	(2) SMR CODE	(3) FSCM	(4) PART NUMBER	(5) DESCRIPTION AND USABLE ON CODE (UOC)	(6) QTY
				GROUP 3307: SPECIAL PURPOSE KITS FIG. 270 M1078 AND M1081 TROOPSEAT KIT	
1	PDOZZ	19207	57K1893	KIT, TROOP SEATS UOC: LAB, LAC, LWB, LWC,	1
2	PAOZZ	19207	12418555-002	.FRAME, SEAT, VEHICULA UOC: LAB, LAC, LWB, LWC,	4
3	PAOOO	19207	12418548	.SUPPORT, SEAT, VEHICU RIGHT SIDE UOC: LAB, LAC, LWB, LWC,	2
3	PAOOO	19207	12418755	.SUPPORT, SEAT, VEHICU LEFT SIDE UOC: LAB, LAC, LWB, LWC,	2
4	PAOZZ	19207	12420591	. . BELT, VEHICULAR SAFE UOC: LAB, LAC, LWB, LWC,	2
5	PAOZZ	19207	12418551	. .PANEL, BLANK UOC: LAB, LAC, LWB, LWC,	1
6	PAOZZ	19207	12418558	. .BRACKET, MOUNTING UOC: LAB, LAC, LWB, LWC,	4
7	PAOZZ	80204	B1821BH031C250N	. .BOLT, MACHINE 5/16-18 X 2 1/2 UOC: LAB, LAC, LWB, LWC,	4
8	PAOZZ	96906	MS51922-9	. .NUT, SELF-LOCKING, HE 5/16-18 UOC: LAB, LAC, LWB, LWC,	4
9	PAOZZ	19207	12418559-001	. .SUPPORT, SEAT, VEHICU UOC: LAB, LAC, LWB, LWC,	1
10	PAOZZ	19207	12418543-002	. .COLLAR, RETAINING UOC: LAB, LAC, LWB, LWC,	2
11	PAOZZ	19207	12418557-002	. .PIN, QUICK RELEASE UOC: LAB, LAC, LWB, LWC,	2
12	MOOZZ	2AA56	999-000890	. .LANYARD ASSY MAKE FROM WIRE ROPE P/N M83420/1-001 (81349) X 8 IN UOC: LAB, LAC, LWB, LWC,	2
13	PAOZZ	19207	12418544-001	. .TUBE, METALLIC UOC: LAB, LAC, LWB, LWC,	1
14	PAOZZ	19207	12418559-002	. .SUPPORT, SEAT, VEHICU UOC: LAB, LAC, LWB, LWC,	1
15	PAOZZ	19207	12418543-001	. .COLLAR, RETAINING UOC: LAB, LAC, LWB, LWC,	1
16	PAOZZ	19207	12418552	. .PANEL, BLANK UOC: LAB, LAC, LWB, LWC,	1
17	PAOZZ	19207	12418545	.SUPPORT, SEAT, VEHICU UOC: LAB, LAC, LWB, LWC,	2
17	PAOZZ	19207	12418546	.SUPPORT, SEAT, VEHICU UOC: LAB, LAC, LWB, LWC,	2
17	PAOZZ	19207	12418547	.SUPPORT, SEAT, VEHICU UOC: LAB, LAC, LWB, LWC,	2
18	PAOZZ	96906	MS51922-9	. .NUT, SELF-LOCKING, HE 5/16-18 UOC: LAB, LAC, LWB, LWC,	2
19	PAOZZ	96906	MS27183-55	. .WASHER, FLAT 3/8 UOC: LAB, LAC, LWB, LWC,	2

(1) ITEM NO	(2) SMR CODE	(3) FSCM	(4) PART NUMBER	(5) DESCRIPTION AND USABLE ON CODE (UOC)	(6) QTY
20	PAOZZ	19207	12420635	. .SPACER, SLEEVE UOC: LAB, LAC, LWB, LWC,	2
21	PAOZZ	19207	12420839	. .STUD, POSITIVE LOCK UOC: LAB, LAC, LWB, LWC,	2
22	PAOZZ	19207	12420771	. .BOLT, EYE (USED ONLY ON P/N 12418545 AND 12428546) UOC: LAB, LAC, LWB, LWC,	1
23	PAOZZ	96906	MS51859-10	. .WASHER, FLAT 1/2 UOC: LAB, LAC, LWB, LWC,	2
24	PAOZZ	96906	MS51967-14	. .NUT, PLAIN, HEXAGON 1/2-UNC UOC: LAB, LAC, LWB, LWC,	1
25	PAOZZ	19207	11682088-1	.STRAP, WEBBING UOC: LAB, LAC, LWB, LWC,	2
26	PAOZZ	19207	12419953-053	.BOLT, MACHINE M12 X 1.75 X 80 UOC: LAB, LAC, LWB, LWC,	4
27	PAOOO	19207	12421416	.CABLE ASSEMBLY, SPEC TROOP SEAT SAFETY UOC: LAB, LAC, LWB, LWC,	1
28	XAOZZ	19207	12421415	. .BRACKET, MOUNTING UOC: LAB, LAC, LWB, LWC,	1
29	PAOZZ	96906	MS21042-04	. .NUT, SELF-LOCKING, EX #4-40 UOC: LAB, LAC, LWB, LWC,	4
30	PAOZZ	96906	MS24523-30	. .SWITCH, TOGGLE UOC: LAB, LAC, LWB, LWC,	1
31	PAOOO	19207	12421405	. .CABLE ASSEMBLY, SPEC UOC: LAB, LAC, LWB, LWC,	1
32	PAOZZ	96906	MS35206-217	. .SCREW, MACHINE #4-40 X 1/2 UOC: LAB, LAC, LWB, LWC,	4
33	PAOZZ	01226	P304B	. .GLIDE, FURNITURE UOC: LAB, LAC, LWB, LWC,	2
34	PAOZZ	96906	MS27130-S56	. .NUT, PLAIN, BLIND RIV UOC: LAB, LAC, LWB, LWC,	2
35	PAOZZ	96906	MS25224-3	. .GUARD, SWITCH UOC: LAB, LAC, LWB, LWC,	1
36	PAOZZ	08928	LK-6162032S3.021	. .KNOB UOC: LAB, LAC, LWB, LWC,	2
37	PAOZZ	19207	12421404	.CABLE ASSEMBLY, ELEC TROOP TRANSPORT ALARM UOC: LAB, LAC, LWB, LWC,	1

END OF FIGURE

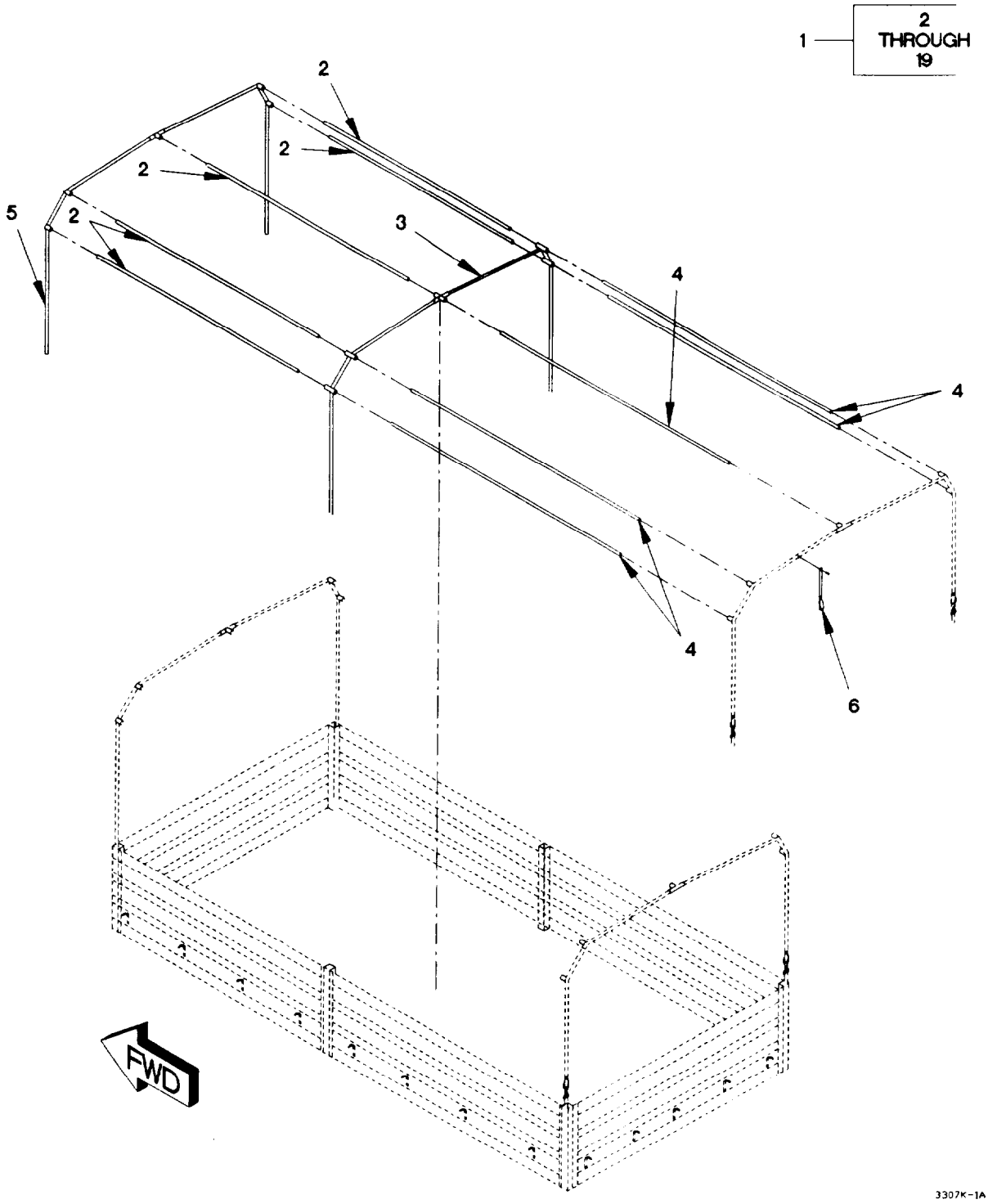

Figure 271. Soft Top Cover Kit (Sheet 1 of 4)

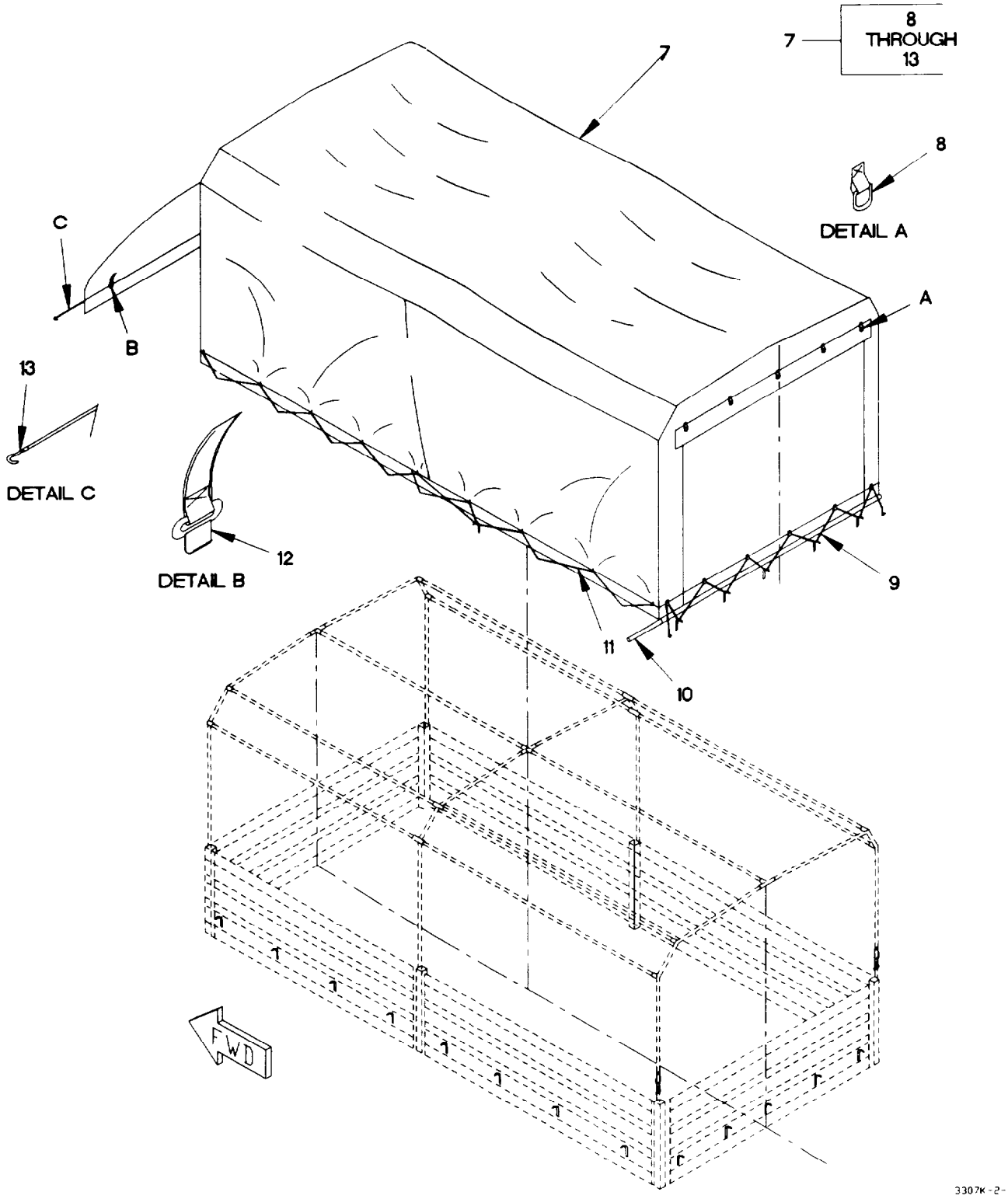

Figure 271. Soft Top Cover Kit (Sheet 2 of 4)

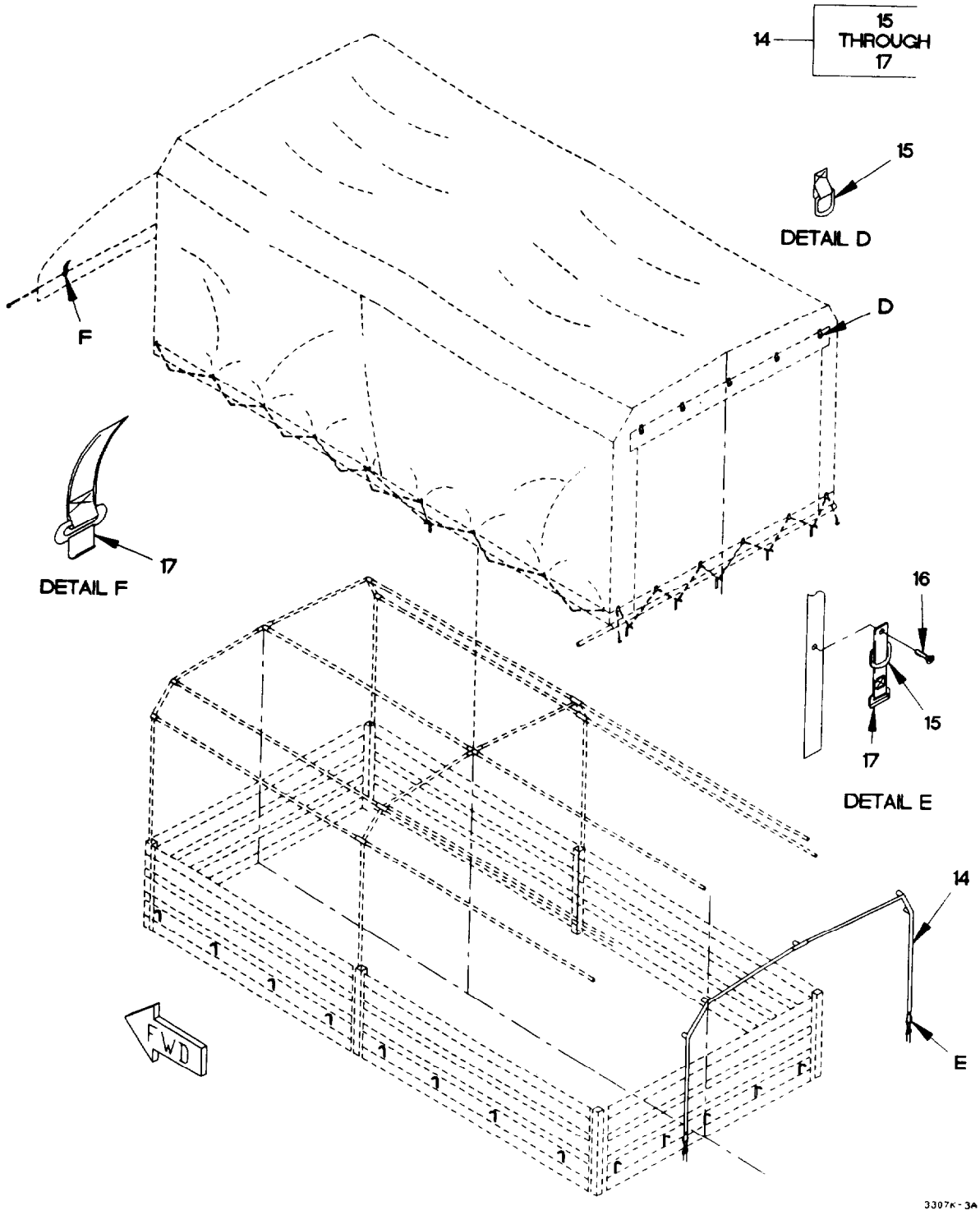

Figure 271. Soft Top Cover Kit (Sheet 3 of 4)

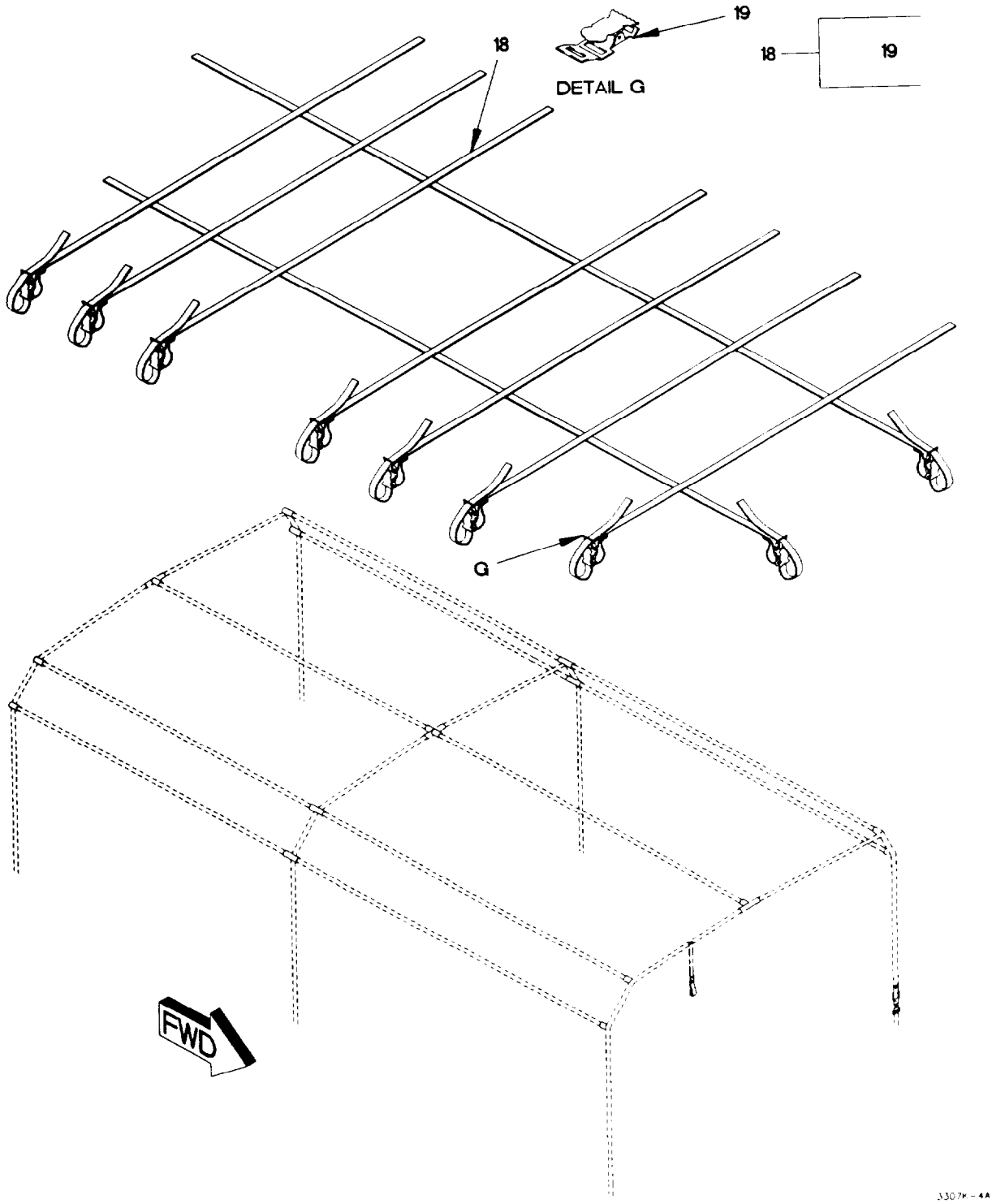

Figure 271. Soft Top Cover Kit (Sheet 4 of 4)

(1) ITEM NO	(2) SMR CODE	(3) FSCM	(4) PART NUMBER	(5) DESCRIPTION AND USABLE ON CODE (UOC)	(6) QTY
				GROUP 3307: SPECIAL PURPOSE KITS	
				FIG. 271 SOFT TOP COVER KIT	
1	PDFZZ	19207	57K1908	WINTERIZATION KIT, V	1
				UOC: LAB, LAC, LWB, LWC,	
1	PDOZZ	19207	57K1898	KIT, COVER, SOFT TOP	1
				UOC: LAB, LAC, LWB, LWC,	
1	PDOZZ	19207	57K1925	KIT, COVER, SOFT TOP	1
				UOC: LAB, LAC, LWB, LWC,	
2	PAOZZ	19207	12420279-003	.TUBE, METALLIC	5
				UOC: LAB, LAC, LWB, LWC,	
3	PAOZZ	19207	12420278-002	.BOW, VEHICULAR TOP	1
				UOC: LAB, LAC, LWB, LWC,	
4	PAOZZ	19207	12420279-002	.TUBE, STRUCTURAL	5
				UOC: LAB, LAC, LWB, LWC,	
5	PAOZZ	19207	12420278-001	.BOW, VEHICULAR TOP	1
				UOC: LAB, LAC, LWB, LWC,	
6	PAOZZ	19207	12420291	.STRAP, WEBBING	1
				UOC: LAB, LAC, LWB, LWC,	
7	PAOOO	19207	12420281	.COVER, FITTED, VEHICU	1
				UOC: LAB, LAC, LWB, LWC,	
7	PAOOO	0FW39	12420281-015	.COVER, ASSEMBLY, FITT	1
8	PAOZZ	81348	MIL-R-3990 CL5-1	. .RING, DEE	97
			IN	UOC: LAB, LAC, LWB, LWC,	
9	PAOZZ	19207	12420277-007	. .CORD ASSEMBLY, FIBRO	2
				UOC: LAB, LAC, LWB, LWC,	
10	PAOZZ	19207	12420275	. .TUBE, METALLIC	1
				UOC: LAB, LAC, LWB, LWC,	
11	PAOZZ	0FW39	12420277-008	. .CORD ASSEMBLY, ELAST	2
				UOC: LAB, LAC, LWB, LWC,	
12	PAOZZ	19207	12420280	. .BOLT BLANK	3
				UOC: LAB, LAC, LWB, LWC,	
13	PAOZZ	19207	12420277-009	. .CORD ASSEMBLY, FIBRO	2
				UOC: LAB, LAC, LWB, LWC,	
14	PAOOO	19207	12420278-003	.BOW, VEHICULAR TOP	1
				UOC: LAB, LAC, LWB, LWC,	
15	PAOZZ	81348	MIL-R-3990 CL5-1	. .RING, DEE	4
			IN	UOC: LAB, LAC, LWB, LWC,	
16	PAOZZ	QPKM9	WW-8X500	. .SCREW, MACHINE	2
				UOC: LAB, LAC, LWB, LWC,	
17	PAOZZ	19207	12420280	. .BOLT BLANK	2
				UOC: LAB, LAC, LWB, LWC,	
18	PAOZZ	19207	12421792	.STRAP, SUPPORT ASSY	1
				UOC: LAB, LAC, LWB, LWC,	
19	PAOZZ	96906	MS51929-3	. .BUCKLE, SPRING ACTI	8

END OF FIGURE

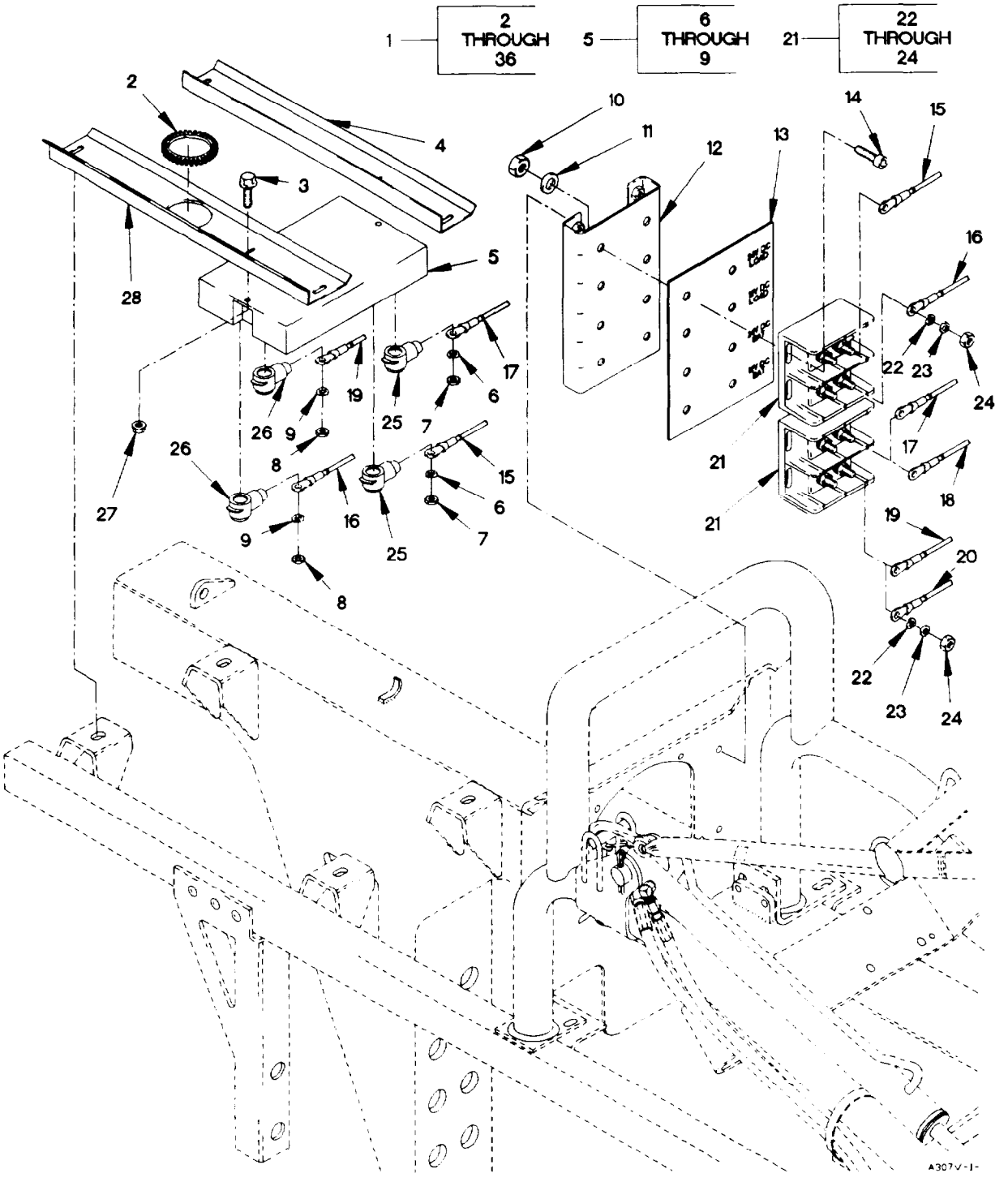

Figure 272. 200A Alternator Kit (Sheet 1 of 3)

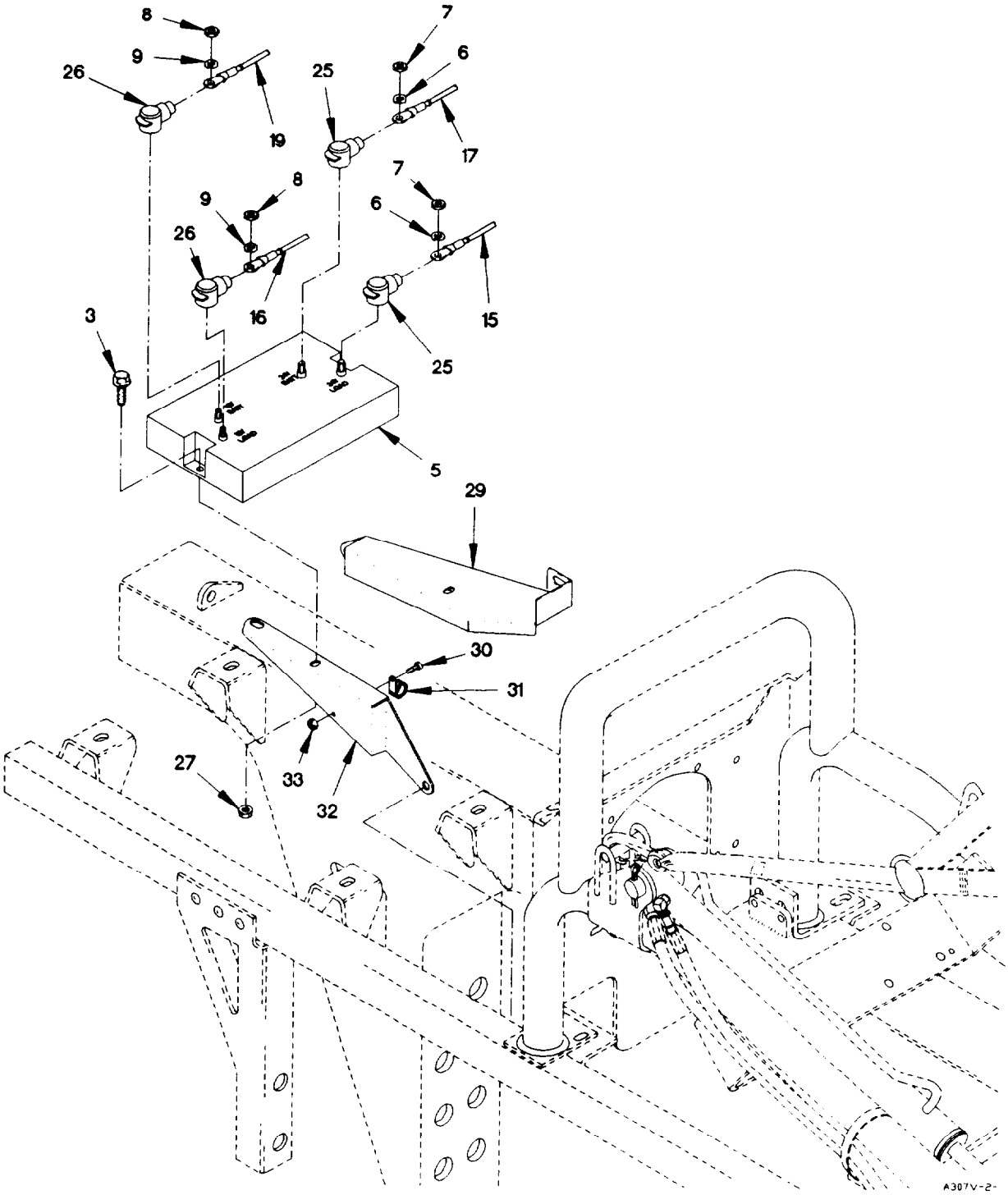

Figure 272. 200A Alternator Kit (Sheet 2 of 3)

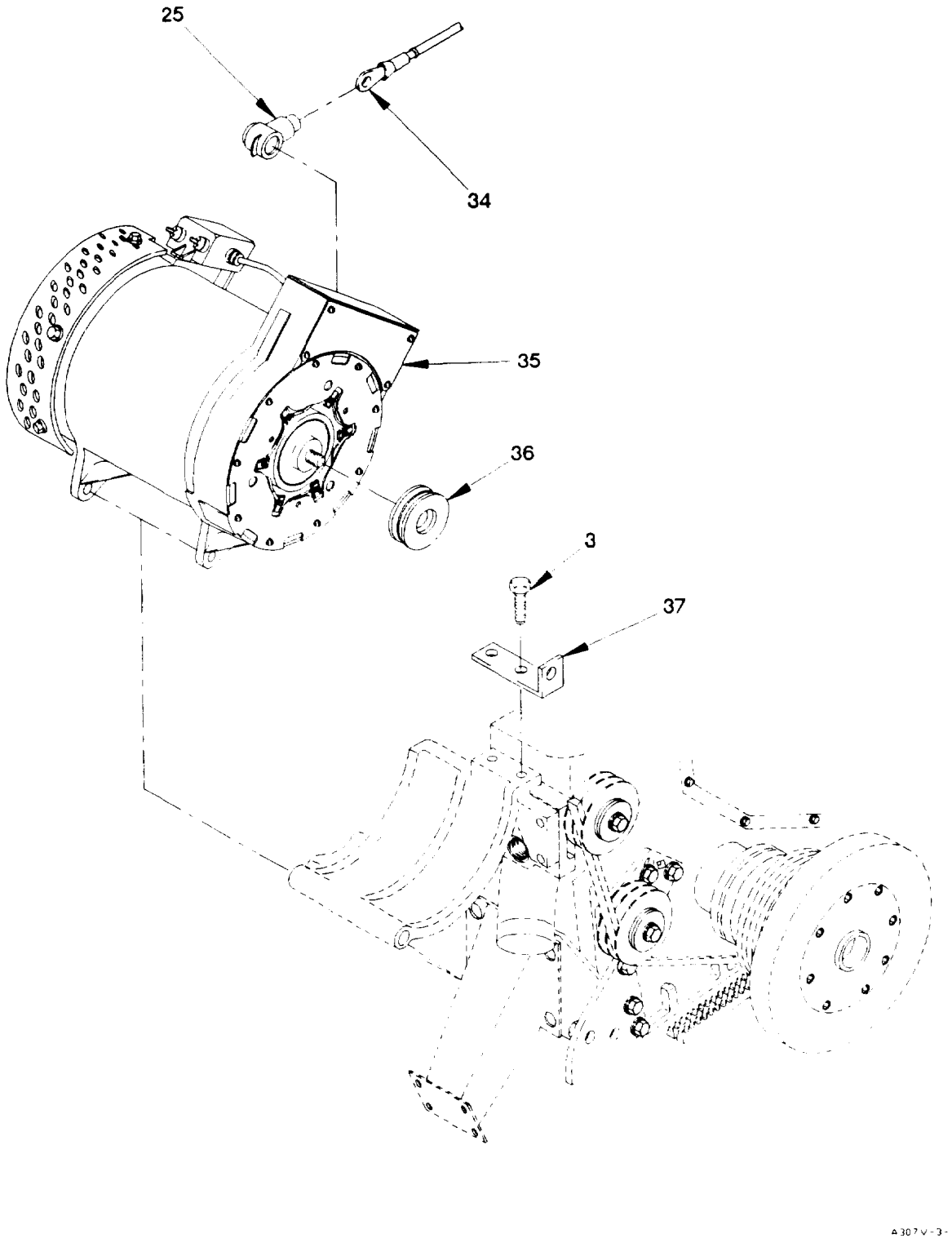

Figure 272. 200A Alternator Kit (Sheet 3 of 3)

(1) ITEM NO	(2) SMR CODE	(3) FSCM	(4) PART NUMBER	(5) DESCRIPTION AND USABLE ON CODE (UOC)	(6) QTY
				GROUP 3307: SPECIAL PURPOSE KITS	
				FIG. 272 200A ALTERNATOR KIT	
1	PDOZZ	19207	57K1918	PARTS KIT, ELECTRICA	1
				UOC: LAC, LWC,	
1	PDOZZ	19207	57K1912	PARTS KIT, ELECTRICA	1
				UOC: LAA, LAB, LAD, LWB, LWD,	
2	PAOZZ	96906	MS21266-2N	.GROMMET, NONMETALLIC	1
				UOC: LAA, LAB, LAD, LWB, LWD,	
3	PAOZZ	19207	12414307-037	.BOLT, MACHINE M8 X 1.25 X 25	4
4	PAOZZ	19207	12421345-002	.BRACKET, MOUNTING	1
				UOC: LAA, LAB, LAD, LWB, LWD,	
5	PAOZZ	00062	RPPD-200	.RELAY, ELECTROMAGNET	1
6	PAOZZ	81349	D70336/3-52	. .WASHER, LOCK 12MM	2
7	PAOZZ	0H7H2	DJN439012	. .NUT, PLAIN, HEXAGON 12MM X 1.75	2
8	PAOZZ	62445	1131132	. .NUT, PLAIN, HEXAGON 8MM X 1.25	2
9	PAOZZ	81349	D70336/3-50	. .WASHER, LOCK 8MM	2
10	PAOZZ	19207	12414315-003	.NUT, PLAIN, HEXAGON M5 X .8	8
11	PAOZZ	D8286	DIN9021-5,3-100H V-C-B3B	.WASHER, FLAT M5.3	8
12	PAOZZ	19207	12421344	.BRACKET, MOUNTING	1
13	PAOZZ	19207	12421451	.PLATE, IDENTIFICATIO	1
14	PAOZZ	19207	12414475-059	.SCREW, CAP, SOCKET HE M5 X .8 X 20	8
15	PAOZZ	19207	12421341-002	.CABLE ASSEMBLY, ELEC	1
				UOC: LAA, LAB, LAD, LWB, LWD,	
15	PAOZZ	19207	12421341-006	.CABLE ASSEMBLY, ELEC	1
				UOC: LAC, LWC,	
16	PAOZZ	19207	12421341-004	.CABLE ASSEMBLY, ELEC	1
				UOC: LAA, LAB, LAD, LWB, LWD,	
16	PAOZZ	19207	12421341-008	.CABLE ASSEMBLY, ELEC	1
				UOC: LAC, LWC,	
17	PAOZZ	19207	12421341-001	.CABLE ASSEMBLY, ELEC	1
				UOC: LAA, LAB, LAD, LWB, LWD,	
17	PAOZZ	19207	12421341-005	.CABLE ASSEMBLY, ELEC	1
				UOC: LAC, LWC,	
18	PAOZZ	19207	12420899-001	.CABLE ASSEMBLY, ELEC	1
19	PAOZZ	19207	12421341-003	.CABLE ASSEMBLY, ELEC	1
				UOC: LAA, LAB, LAD, LWB, LWD,	
19	PAOZZ	19207	12421341-007	.CABLE ASSEMBLY, ELEC	1
				UOC: LAC, LWC,	
20	PAOZZ	19207	12420906-001	.CABLE ASSEMBLY, ELEC	1
21	PAOZZ	26405	1432563-CU	.TERMINAL BLOCK, ELEC	2
22	PAOZZ	96906	MS35338-46	. .WASHER, LOCK 3/8	4
23	PAOZZ	96906	MS27183-14	. .WASHER, FLAT 13/32	4
24	PAOZZ	96906	MS51967-8	. .NUT, PLAIN, HEXAGON 3/8-16	4
25	PAOZZ	19207	12421186-001	.DUMMY CONTACT, ELECT	4
26	PAOZZ	19207	12421186-003	.BELLOWS, PROTECTION	2
27	PAOZZ	19207	12414308-018	.NUT, SELF-LOCKING, EX M8 X 1.25	2

(1) ITEM NO	(2) SMR CODE	(3) FSCM	(4) PART NUMBER	(5) DESCRIPTION AND USABLE ON CODE (UOC)	(6) QTY
28	PAOZZ	19207	12421345-001	.BRACKET, MOUNTING UOC: LAA, LAB, LAD, LWB, LWD,	1
29	PAOZZ	19207	12421349-001	.BRACKET, MOUNTING UOC: LAC, LWC,	1
30	PAOZZ	15526	DIN933-M6X16-8.8 -A4C	.SCREW, CAP, HEXAGON H M6 X 1 X 16 UOC: LAC, LWC,	1
31	PAOZZ	18076	S630H-8	.CLAMP, LOOP UOC: LAC, LWC,	1
32	PAOZZ	19207	12421349-002	.BRACKET, MOUNTING UOC: LAC, LWC,	1
33	PAOZZ	19207	12414308-016	.NUT, SELF-LOCKING, EX M6 X 1 UOC: LAC, LWC,	1
34	PAOZZ	96906	MS25036-155	.TERMINAL, LUG	1
35	PAOFF	76761	N1216-1	.GENERATOR, ALTERNATI (FOR COMPONENT PARTS SEE FIG. 273)	1
36	PAOZZ	19207	12420810	.PULLEY, GROOVE	1
37	PAOZZ	19207	12414341	.ARM, ADJUSTING, BELT	1

END OF FIGURE

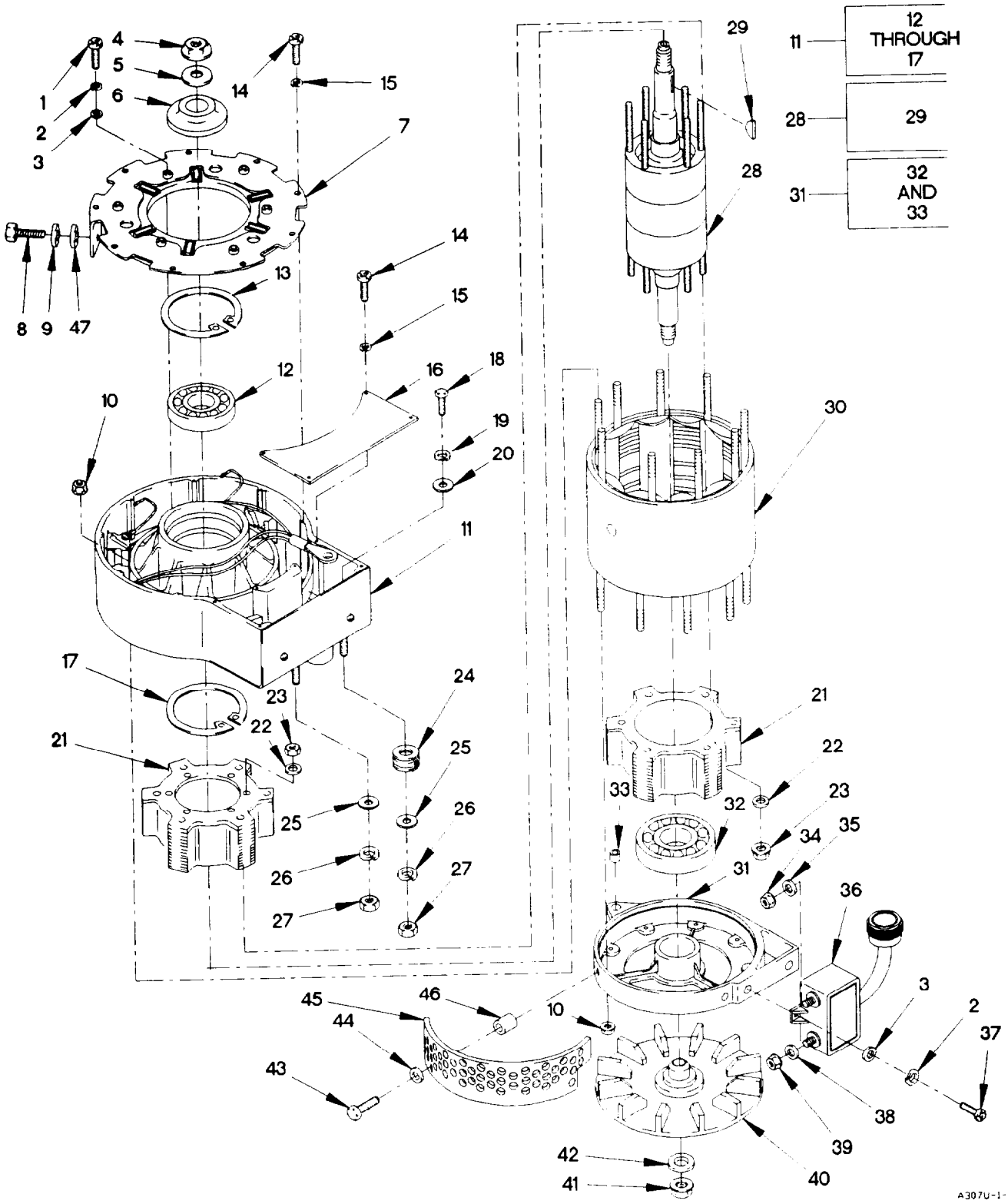

Figure 273. 200A Alternator Assembly and Regulator

(1) ITEM NO	(2) SMR CODE	(3) FSCM	(4) PART NUMBER	(5) DESCRIPTION AND USABLE ON CODE (UOC)	(6) QTY
				GROUP 3307: SPECIAL PURPOSE KITS FIG. 273 200A ALTERNATOR ASSEMBLY AND REGULATOR	
1	PAFZZ	96906	MS51958-63	SCREW, MACHINE 10-32 X 1/2	6
2	PAFZZ	76761	N9018	WASHER, SPRING TENSI	8
3	PAFZZ	76761	N9016	WASHER, FLAT 3/16	8
4	PAFZZ	76761	N9406	NUT, SELF-LOCKING, HE 3/4-16	1
5	PAFZZ	76761	N9374	WASHER, FLAT 3/4	1
6	PAFZZ	76761	N9395	BUSHING, SLEEVE	1
7	PAFZZ	76761	N7441	HEAT SINK, ELECTRICA	1
8	PAFZZ	76761	N9014	BOLT, MACHINE 5/16-18 X 3/4	1
9	PAFZZ	76761	N9015	WASHER, LOCK 5/16	1
10	PAFZZ	76761	N9099	NUT, SELF-LOCKING, EX	18
11	PAFFF	76761	N7442	HOUSING, ELECTRONIC	1
12	PAFZZ	76761	N9010	.BEARING, BALL, ANNULA	1
13	PAFZZ	76761	N9009	.RING, RETAINING	1
14	PAFZZ	76761	N9005	.SCREW, MACHINE 8-32 X 3/8	13
15	PAFZZ	76761	N9265	.WASHER, LOCK 8	13
16	PAFZZ	76761	N9438	.COVER, ELECTRICAL GE	1
17	PAFZZ	76761	N9008	.RING, RETAINING	1
18	PAFZZ	76761	N9498	BOLT, MACHINE	2
19	PAFZZ	76761	N9574	WASHER, LOCK	2
20	PAFZZ	76761	N9455	WASHER, FLAT	2
21	PAFZZ	76761	N7312	ROTOR ASSEMBLY	2
22	PAFZZ	76761	N9320	WASHER, FLAT 3/16	12
23	PAFZZ	76761	N9091	NUT, SELF-LOCKING, HE #10-32	12
24	PAFZZ	76761	N9413	FUSE LINK, ELECTRICA	1
25	PAFZZ	76761	N9331	WASHER, FLAT	2
26	PAFZZ	76761	N9461	WASHER, LOCK	2
27	PAFZZ	76761	N9453	NUT, PLAIN, HEXAGON	2
28	PAFZZ	76761	N7357	ARMATURE ASSEMBLY	1
29	PAFZZ	76761	N9040	.KEY, WOODRUFF	1
30	PAFZZ	76761	N7358	COIL, ELECTRICAL	1
31	PAFFF	76761	N7395	END BELL, ELECTRICAL	1
32	PAFZZ	76761	N9385	.BEARING, BALL, ANNULA	1
33	PAFZZ	76761	N9405	.BUSHING, SLEEVE	1
34	PAFZZ	76761	N9467	NUT, PLAIN, CAP	1
35	PAFZZ	76761	N9465	WASHER, FLAT	1
36	PAFZZ	76761	N3029	REGULATOR, VOLTAGE	1
37	PAFZZ	76761	N9199	SCREW, MACHINE	2
38	PAFZZ	13499	500-1114-003	WASHER, FLAT 17/64	1
39	PAFZZ	76761	N9410	NUT, PLAIN, OCTAGON	1
40	PAFZZ	76761	N7309	IMPELLER, FAN, CENTRI	1
41	PAFZZ	19207	11649930	NUT, SELF-LOCKING, HE 1/2-20	1
42	PAFZZ	76761	N9063	WASHER, FLAT 1/2	1
43	PAFZZ	76761	N9077	BOLT, SELF-LOCKING	3

(1) ITEM NO	(2) SMR CODE	(3) FSCM	(4) PART NUMBER	(5) DESCRIPTION AND USABLE ON CODE (UOC)	(6) QTY
44	PAFZZ	76761	N9338	WASHER, FLAT	3
45	PAFZZ	76761	N9501	GUARD, FAN IMPELLER	1
46	PAFZZ	76761	N9575	BUSHING, SLEEVE	3
47	PAFZZ	76761	N9544	WASHER, FLAT	1

END OF FIGURE

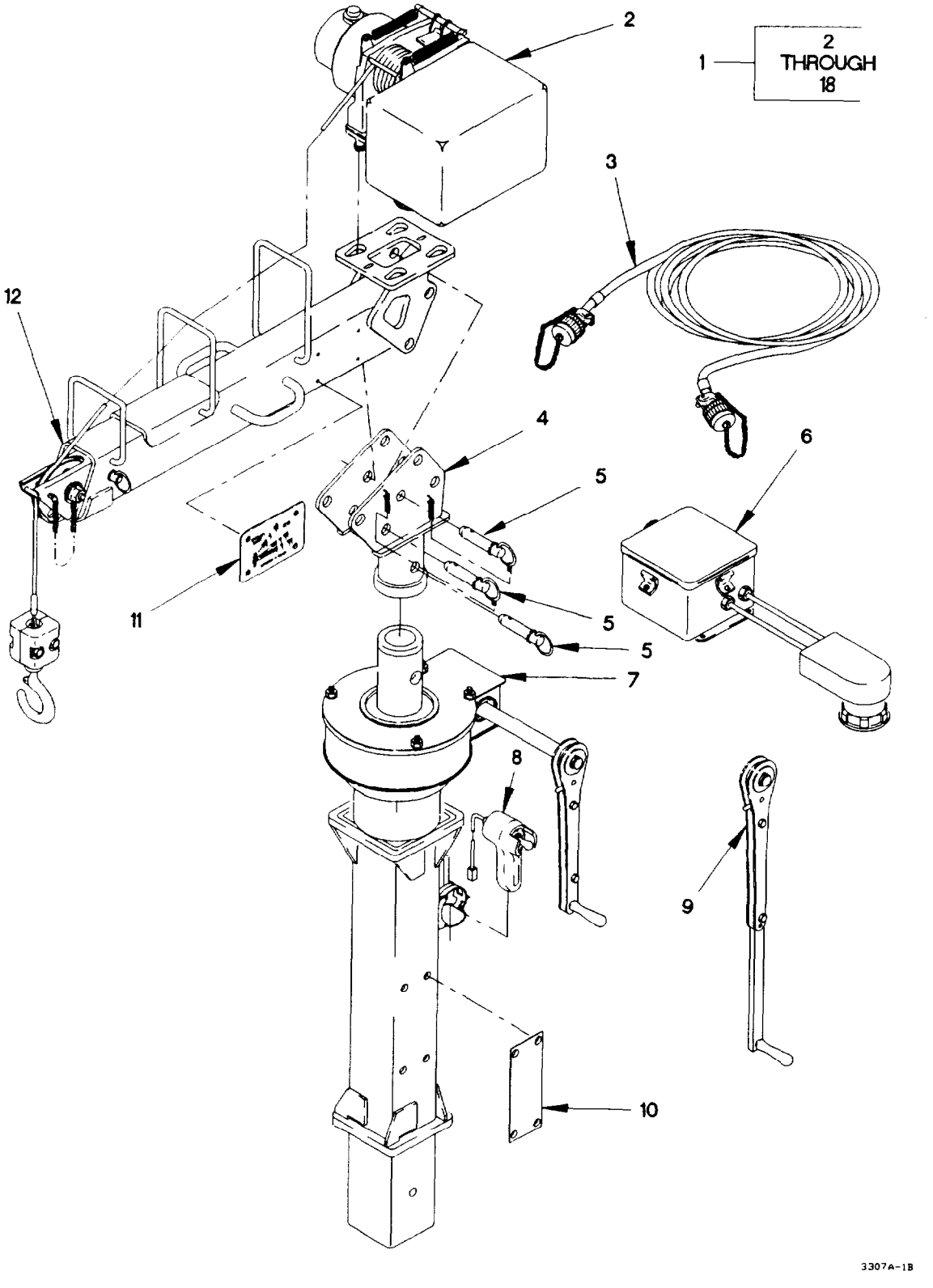

Figure 274. Light Material Handling Crane Kit (Sheet 1 of 2)

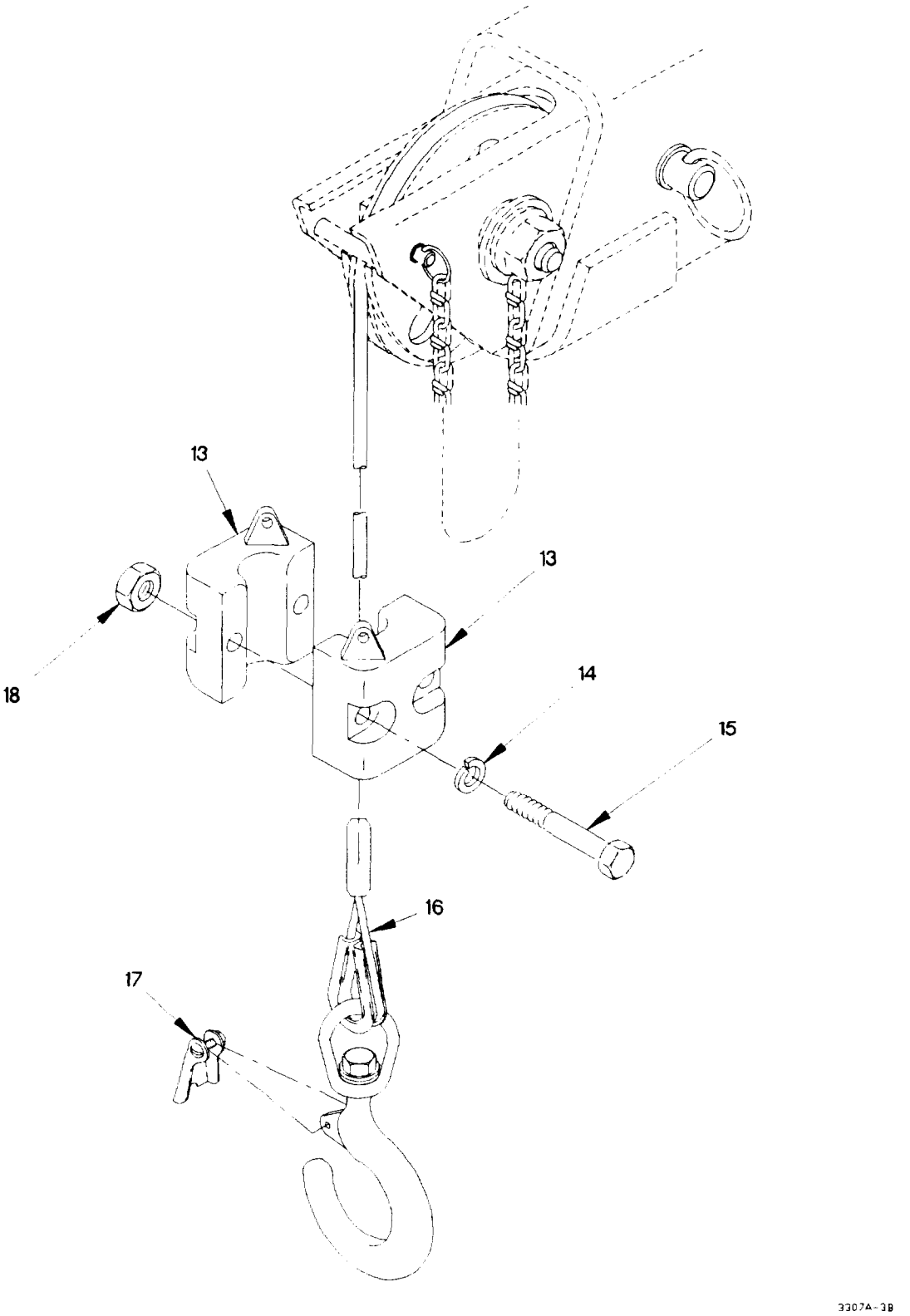

Figure 274. Light Material Handling Crane Kit (Sheet 2 of 2)

(1) ITEM NO	(2) SMR CODE	(3) FSCM	(4) PART NUMBER	(5) DESCRIPTION AND USABLE ON CODE (UOC)	(6) QTY
				GROUP 3307: SPECIAL PURPOSE KITS FIG. 274 LIGHT MATERIAL HANDLING CRANE KIT	
1	PDOZZ	19207	57K1215	KIT, CRANE UOC: LAB, LAC, LWB, LWC,	1
2	PAOFF	27647	28519	.WINCH, DRUM, VEHICLE (FOR COMPONENT PARTS SEE FIG. 275) UOC: LAB, LAC, LWB, LWC,	1
3	PAFFF	12361	6-246-002509	.CABLE ASSEMBLY, SPEC (FOR COMPONENT PARTS SEE FIG. 280) UOC: LAB, LAC, LWB, LWC,	1
4	PFOZZ	12361	2-195-9-00578	.COVER, TURRET BASE UOC: LAB, LAC, LWB, LWC,	1
5	PAOFF	09332	D16-45R	.PIN, QUICK RELEASE UOC: LAB, LAC, LWB, LWC,	3
6	PAFFF	12361	2-195-3-00501	.CIRCUIT BREAKER (FOR COMPONET PARTS SEE FIG. 281) UOC: LAB, LAC, LWB, LWC,	1
7	XAFFF	12361	2-195-1-00647	.MAST/SWING ASSEMBLY (FOR COMPONET PARTS SEE FIG. 277) UOC: LAB, LAC, LWB, LWC,	1
8	PAOZZ	27647	25534	.HANDLE, MANUAL CONTR UOC: LAB, LAC, LWB, LWC,	1
9	AOOOO	12361	6-511-001259	.HANDLE ASSY (FOR COMPONENT PARTS SEE FIG. 278) UOC: LAB, LAC, LWB, LWC,	1
10	PAFZZ	12361	7-679-002360	.PLATE, IDENTIFICATIO UOC: LAB, LAC, LWB, LWC,	1
11	PAFZZ	12361	7-679-002350	.PLATE, DESIGNATION UOC: LAB, LAC, LWB, LWC,	2
12	PAFFF	12361	2-195-9-00579	.BOOM, CRANE (FOR COMPONENT PARTS SEE FIG. 279) UOC: LAB, LAC, LWB, LWC,	1
13	PAOZZ	12361	7-962-000040	.WEIGHT, ANTI BLOCK UOC: LAB, LAC, LWB, LWC,	2
14	PAFZZ	96906	MS35338-46	.WASHER, LOCK 3/8 UOC: LAB, LAC, LWB, LWC,	2
15	PAFZZ	96906	MS90725-71	.SCREW, CAP, HEXAGON H 3/18-16 X 3 1/4 UOC: LAB, LAC, LWB, LWC,	2
16	PAOZZ	27647	25729	.WIRE ROPE ASSEMBLY, UOC: LAB, LAC, LWB, LWC,	1
17	PAOZZ	12361	7-585-000730	.LATCH, PINTLE HOOK UOC: LAB, LAC, LWB, LWC,	1
18	PAFZZ	12361	7-660-160000	.NUT, PLAIN, HEXAGON UOC: LAB, LAC, LWB, LWC,	2
				END OF FIGURE	

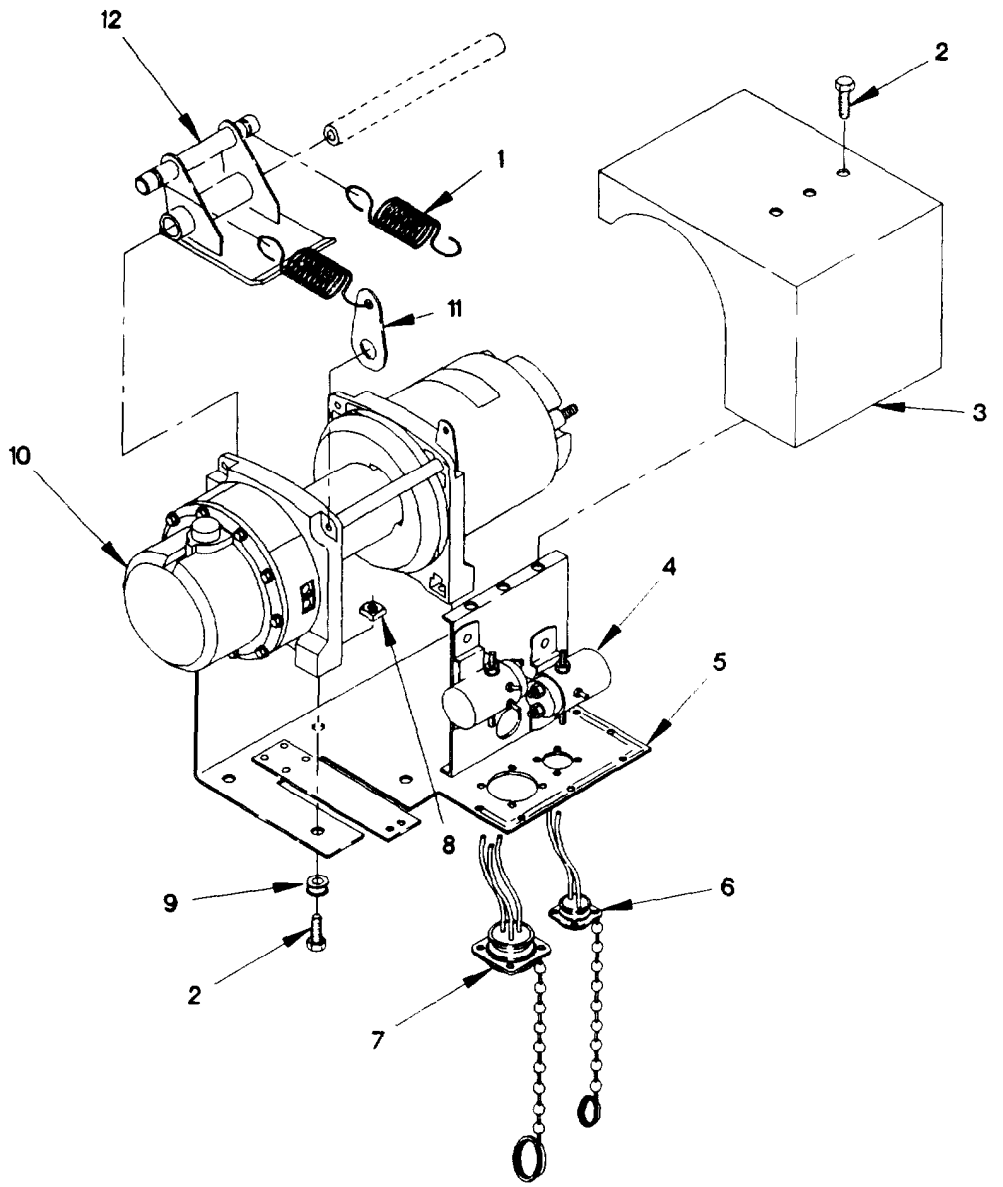

3307B-1B

Figure 275. Light Material Handling Crane Winch Assembly

(1) ITEM NO	(2) SMR CODE	(3) FSCM	(4) PART NUMBER	(5) DESCRIPTION AND USABLE ON CODE (UOC)	(6) QTY
				GROUP 3307: SPECIAL PURPOSE KITS FIG. 275 LIGHT MATERIAL HANDLING CRANE WINCH ASSEMBLY	
1	PAOZZ	27647	28629	SPRING, FLAT UOC: LAB, LAC, LWB, LWC,	2
2	PAOZZ	27647	28326	SCREW, CAP, HEXAGON H UOC: LAB, LAC, LWB, LWC,	22
3	PAOZZ	27647	25531	COVER, WINCH UOC: LAB, LAC, LWB, LWC,	1
4	PAFZZ	27647	13521	SOLENOID ASSEMBLY UOC: LAB, LAC, LWB, LWC,	2
5	PAFZZ	27647	25530	PLATE, MOUNTING UOC: LAB, LAC, LWB, LWC,	1
6	PAFZZ	27647	28572	LEAD ASSEMBLY, ELECT UOC: LAB, LAC, LWB, LWC,	1
7	PAFZZ	27647	28573	LEAD ASSEMBLY, ELECT UOC: LAB, LAC, LWB, LWC,	1
8	PAOZZ	27647	27882	NUT, PLAIN, SQUARE UOC: LAB, LAC, LWB, LWC,	4
9	PAOZZ	27647	28579	PLATE, MOUNTING UOC: LAB, LAC, LWB, LWC,	4
10	PAOFF	27647	28515	HOIST UNIT, HYDRAULI UOC: LAB, LAC, LWB, LWC,	1
11	PAOZZ	27647	28621	ANCHOR STRAP UOC: LAB, LAC, LWB, LWC,	2
12	PAOZZ	27647	29470	TENSIONER, WINCH ASS UOC: LAB, LAC, LWB, LWC,	1
				END OF FIGURE	

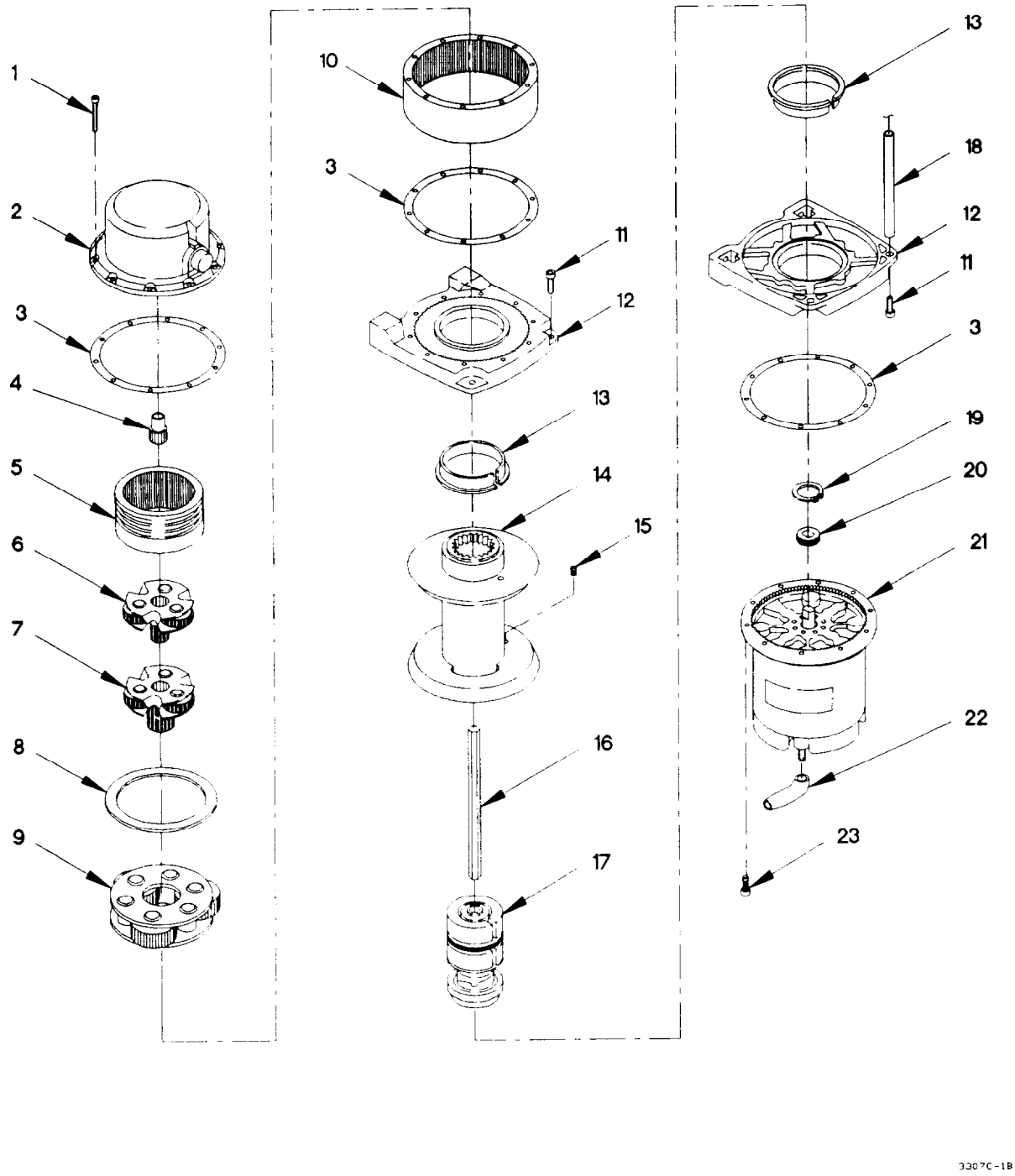

Figure 276. Light Material Handling Crane Hoist Assembly

(1) ITEM NO	(2) SMR CODE	(3) FSCM	(4) PART NUMBER	(5) DESCRIPTION AND USABLE ON CODE (UOC)	(6) QTY
				GROUP 3307: SPECIAL PURPOSE KITS FIG. 276 LIGHT MATERIAL HANDLING CRANE HOIST ASSEMBLY	
1	PAFZZ	27647	13850	SCREW, CAP, SOCKET H UOC: LAB, LAC, LWB, LWC,	10
2	XAFZZ	27647	27863	HOUSING UOC: LAB, LAC, LWB, LWC,	1
3	PAFZZ	27647	13848	GASKET UOC: LAB, LAC, LWB, LWC,	2
4	PAFZZ	27647	13874	GEAR, SPUR UOC: LAB, LAC, LWB, LWC,	1
5	PAFZZ	27647	13839	GEAR, INTERNAL UOC: LAB, LAC, LWB, LWC,	1
6	PAFZZ	27647	14401	CARRIER ASSEMBLY, WI UOC: LAB, LAC, LWB, LWC,	1
7	PAFZZ	27647	14402	CARRIER, GEAR ASSEMB UOC: LAB, LAC, LWB, LWC,	1
8	PAFZZ	27647	13826	BEARING, WSHER, THRU UOC: LAB, LAC, LWB, LWC,	1
9	PAFZZ	27647	25523	CARRIER, GEAR ASSEMB UOC: LAB, LAC, LWB, LWC,	1
10	PAFZZ	27647	29468	GEAR, SPUR UOC: LAB, LAC, LWB, LWC,	1
11	PAFZZ	27647	7146	SCREW, CAP, HEXAGON H UOC: LAB, LAC, LWB, LWC,	4
12	PAFZZ	27647	29471	SUPPORT, WINCH UOC: LAB, LAC, LWB, LWC,	2
13	PAFZZ	27647	13831	BUSHING, SLEEVE UOC: LAB, LAC, LWB, LWC,	2
14	PAFZZ	27647	25745	DRUM, HOIST UOC: LAB, LAC, LWB, LWC,	1
15	PAFZZ	27647	23195	SETSCREW UOC: LAB, LAC, LWB, LWC,	2
16	PAFZZ	27647	13830	SHAFT, STRAIGHT UOC: LAB, LAC, LWB, LWC,	1
17	PAFZZ	27647	13799	BRAKE BAND AND LINI UOC: LAB, LAC, LWB, LWC,	1
18	PAFZZ	27647	28620	TIE ROD, TENSIONING UOC: LAB, LAC, LWB, LWC,	2
19	PAFZZ	27647	1159	RING, RETAINING UOC: LAB, LAC, LWB, LWC,	1
20	PAFZZ	27647	6221	GEAR, SPUR UOC: LAB, LAC, LWB, LWC,	1
21	PAFZZ	27647	29467	MOTOR, DIRECT CURREN UOC: LAB, LAC, LWB, LWC,	1

(1) ITEM NO	(2) SMR CODE	(3) FSCM	(4) PART NUMBER	(5) DESCRIPTION AND USABLE ON CODE (UOC)	(6) QTY
22	PAFZZ	27647	2090	CABLE NIPPLE, ELECTR UOC: LAB, LAC, LWB, LWC,	2
23	PAFZZ	27647	980074 5553	SCREW, CAP, SOCKET HE UOC: LAB, LAC, LWB, LWC,	10

END OF FIGURE

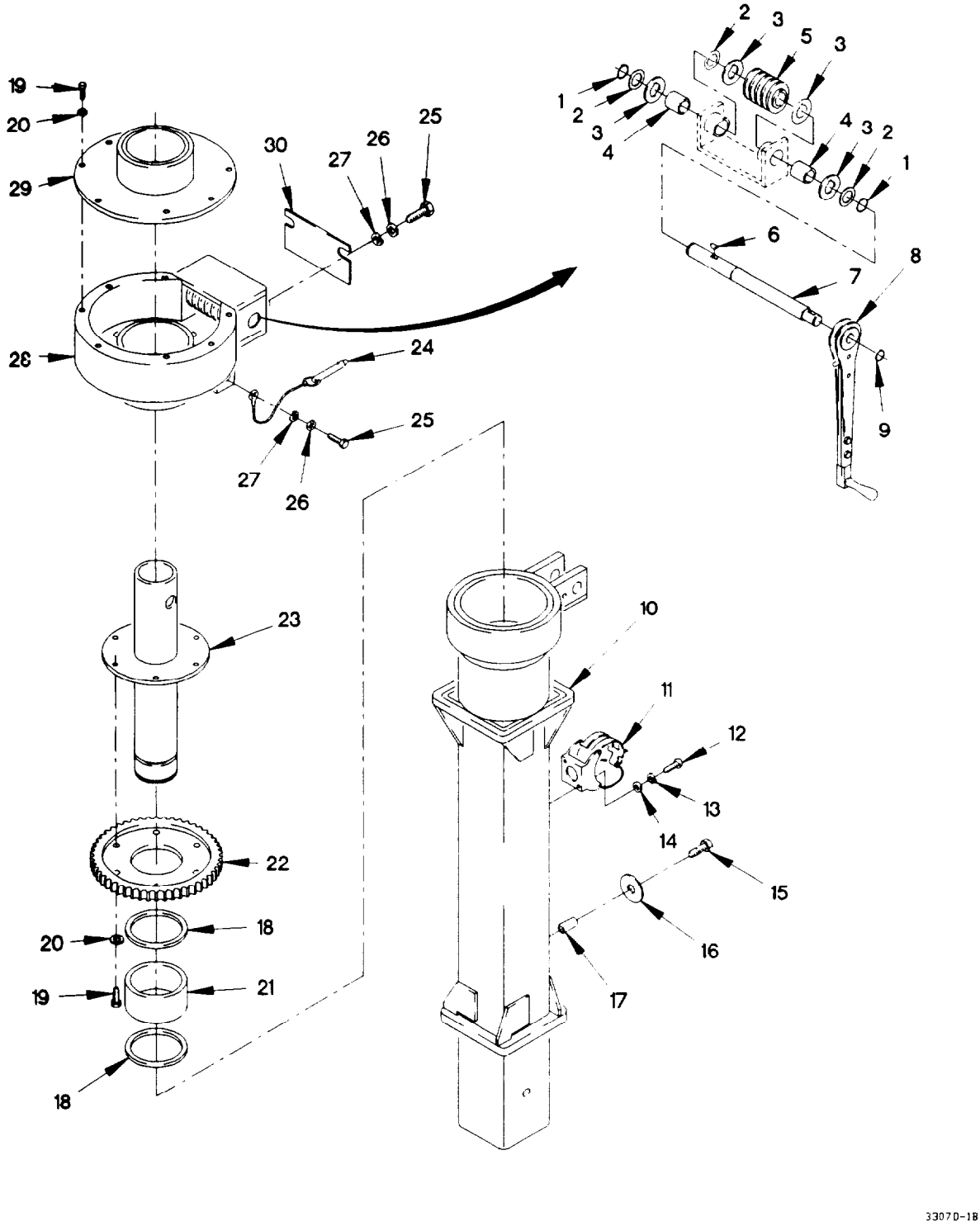

Figure 277. Light Material Handling Crane Mast/Swing Assembly

(1) ITEM NO	(2) SMR CODE	(3) FSCM	(4) PART NUMBER	(5) DESCRIPTION AND USABLE ON CODE (UOC)	(6) QTY
				GROUP 3307: SPECIAL PURPOSE KITS FIG. 277 LIGHT MATERIAL HANDLING CRANE MAST AND SWING ASSEMBLY	
1	PAFZZ	96906	MS16624-1087	RING, RETAINING UOC: LAB, LAC, LWB, LWC,	2
2	PAFZZ	12361	7-949-001151	WASHER, FLAT UOC: LAB, LAC, LWB, LWC,	3
3	PAFZZ	12361	6-949-001166	BEARING, WASHER, THRU UOC: LAB, LAC, LWB, LWC,	4
4	PAFZZ	70901	AP-1108-02	BEARING, SLEEVE UOC: LAB, LAC, LWB, LWC,	2
5	PAFZZ	12361	H1086RH	GEAR, WORM UOC: LAB, LAC, LWB, LWC,	1
6	PAFZZ	12361	6-570-060521	KEY, WOODRUFF UOC: LAB, LAC, LWB, LWC,	1
7	PAFZZ	12361	4-195-1-00860	SHAFT, STRAIGHT UOC: LAB, LAC, LWB, LWC,	1
8	PAOZZ	12361	6-511-001260	HANDLE ASSY UOC: LAB, LAC, LWB, LWC,	1
9	PAFZZ	12361	7-753-000238	RING, RETAINING UOC: LAB, LAC, LWB, LWC,	1
10	PAFZZ	12361	2-195-1-00648	MAST UOC: LAB, LAC, LWB, LWC,	1
11	PAFZZ	34495	11840	CLAMP, LOOP UOC: LAB, LAC, LWB, LWC,	1
12	PAFZZ	96906	MS35206-265	SCREW, MACHINE #10-24 X 3/4 UOC: LAB, LAC, LWB, LWC,	3
13	PAFZZ	96906	MS35338-43	WASHER, LOCK NO. 10 UOC: LAB, LAC, LWB, LWC,	3
14	PAFZZ	96906	MS27183-8	WASHER, FLAT 7/32 UOC: LAB, LAC, LWB, LWC,	3
15	PAFZZ	96906	MS90725-113	SCREW, CAP, HEXAGON H 1/2-13 X 1 1/2 UOC: LAB, LAC, LWB, LWC,	2
16	PAFZZ	81860	9810145-02	WASHER, FLAT 17/32 UOC: LAB, LAC, LWB, LWC,	2
17	PAFZZ	12361	6-200-040008	BUSHING, SLEEVE UOC: LAB, LAC, LWB, LWC,	2
18	PAFZZ	51814	WST-300	RING, RETAINING UOC: LAB, LAC, LWB, LWC,	2
19	PAFZZ	96906	MS90725-33	BOLT, MACHINE 5/16-18 X 7/8 UOC: LAB, LAC, LWB, LWC,	13
20	PAFZZ	12361	7-949-000534	WASHER, FLAT 5/16 UOC: LAB, LAC, LWB, LWC,	13
21	PAFZZ	12361	7-069-001086	BEARING, SLEEVE UOC: LAB, LAC, LWB, LWC,	1
22	PAFZZ	12361	7-490-000631	GEAR, WORM WHEEL UOC: LAB, LAC, LWB, LWC,	1

(1) ITEM NO	(2) SMR CODE	(3) FSCM	(4) PART NUMBER	(5) DESCRIPTION AND USABLE ON CODE (UOC)	(6) QTY
23	PAFZZ	12361	2-195-1-00649	SHAFT, SHOULDERED UOC: LAB, LAC, LWB, LWC,	1
24	PAFZZ	12361	7-689-001643	PIN, STRAIGHT, HEADLE UOC: LAB, LAC, LWB, LWC,	1
25	PAFZZ	80204	B1821BH031C050N	BOLT, MACHINE 5/16-18 X 1/2 UOC: LAB, LAC, LWB, LWC,	2
26	PAFZZ	96906	MS27183-12	WASHER, FLAT 11/32 UOC: LAB, LAC, LWB, LWC,	2
27	PAFZZ	96906	MS35338-45	WASHER, LOCK 5/16 UOC: LAB, LAC, LWB, LWC,	2
28	PAFZZ	12361	2-195-1-00650	BRACKET, EYE, ROTATIN UOC: LAB, LAC, LWB, LWC,	1
29	PAFZZ	12361	2-195-1-00651	PLATE, MOUNTING UOC: LAB, LAC, LWB, LWC,	1
30	PAFZZ	12361	4-195-1-00871	COVER, ACCESS UOC: LAB, LAC, LWB, LWC,	1

END OF FIGURE

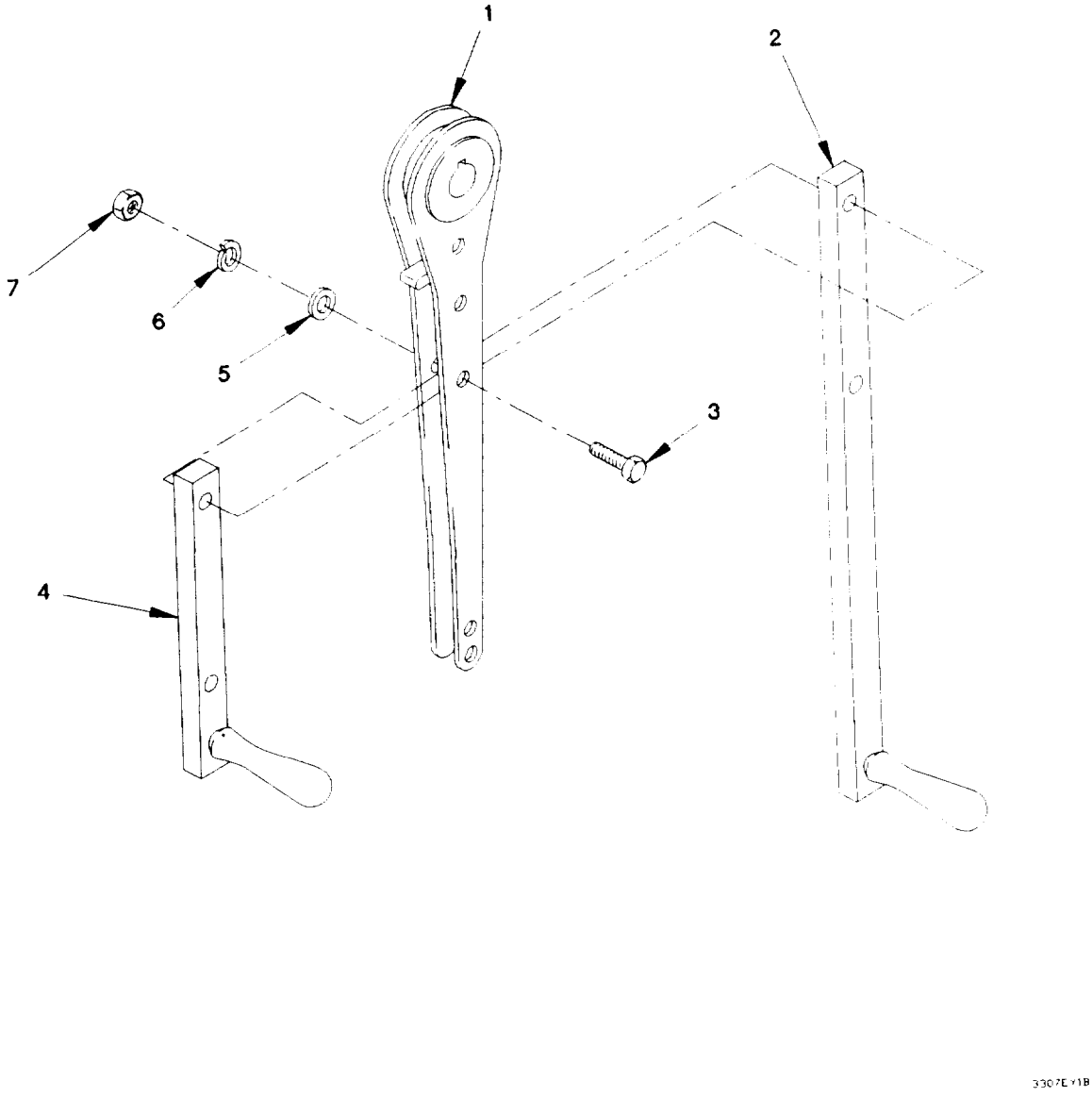

Figure 278. Light Material Handling Crane Handle

(1) ITEM NO	(2) SMR CODE	(3) FSCM	(4) PART NUMBER	(5) DESCRIPTION AND USABLE ON CODE (UOC)	(6) QTY
				GROUP 3307: SPECIAL PURPOSE KITS FIG. 278 LIGHT MATERIAL HANDLING CRANE HANDLE	
1	PAOZZ	12361	6-511-001263	HANDLE UOC: LAB, LAC, LWB, LWC,	1
1	PAOZZ	12361	6-511-001263	HANDLE UOC: LAB, LAC, LWB, LWC,	1
2	PAOZZ	12361	6-511-001261	HANDLE ASSY, LONG USED ON LONG HANDLE UOC: LAB, LAC, LWB, LWC,	1
3	PAOZZ	96906	MS90725-38	BOLT, MACHINE 5/16-18 X 1 3/4 UOC: LAB, LAC, LWB, LWC,	2
3	PAOZZ	96906	MS90725-38	BOLT, MACHINE 5/16-18 X 1 3/4 UOC: LAB, LAC, LWB, LWC,	2
4	PAOZZ	12361	6-511-001262	HANDLE ASSY, SHORT USED ON SHORT HANDLE UOC: LAB, LAC, LWB, LWC,	1
5	PAOZZ	96906	MS27183-12	WASHER, FLAT 11/32 UOC: LAB, LAC, LWB, LWC,	2
5	PAOZZ	96906	MS27183-12	WASHER, FLAT 11/32 UOC: LAB, LAC, LWB, LWC,	2
6	PAOZZ	96906	MS35338-45	WASHER, LOCK 5/16 UOC: LAB, LAC, LWB, LWC,	2
6	PAOZZ	96906	MS35338-45	WASHER, LOCK 5/16 UOC: LAB, LAC, LWB, LWC,	2
7	PAOZZ	96906	MS51967-5	NUT, PLAIN, HEXAGON 5/16-18 UOC: LAB, LAC, LWB, LWC,	2
7	PAOZZ	96906	MS51967-5	NUT, PLAIN, HEXAGON 5/16-18 UOC: LAB, LAC, LWB, LWC,	2
				END OF FIGURE	

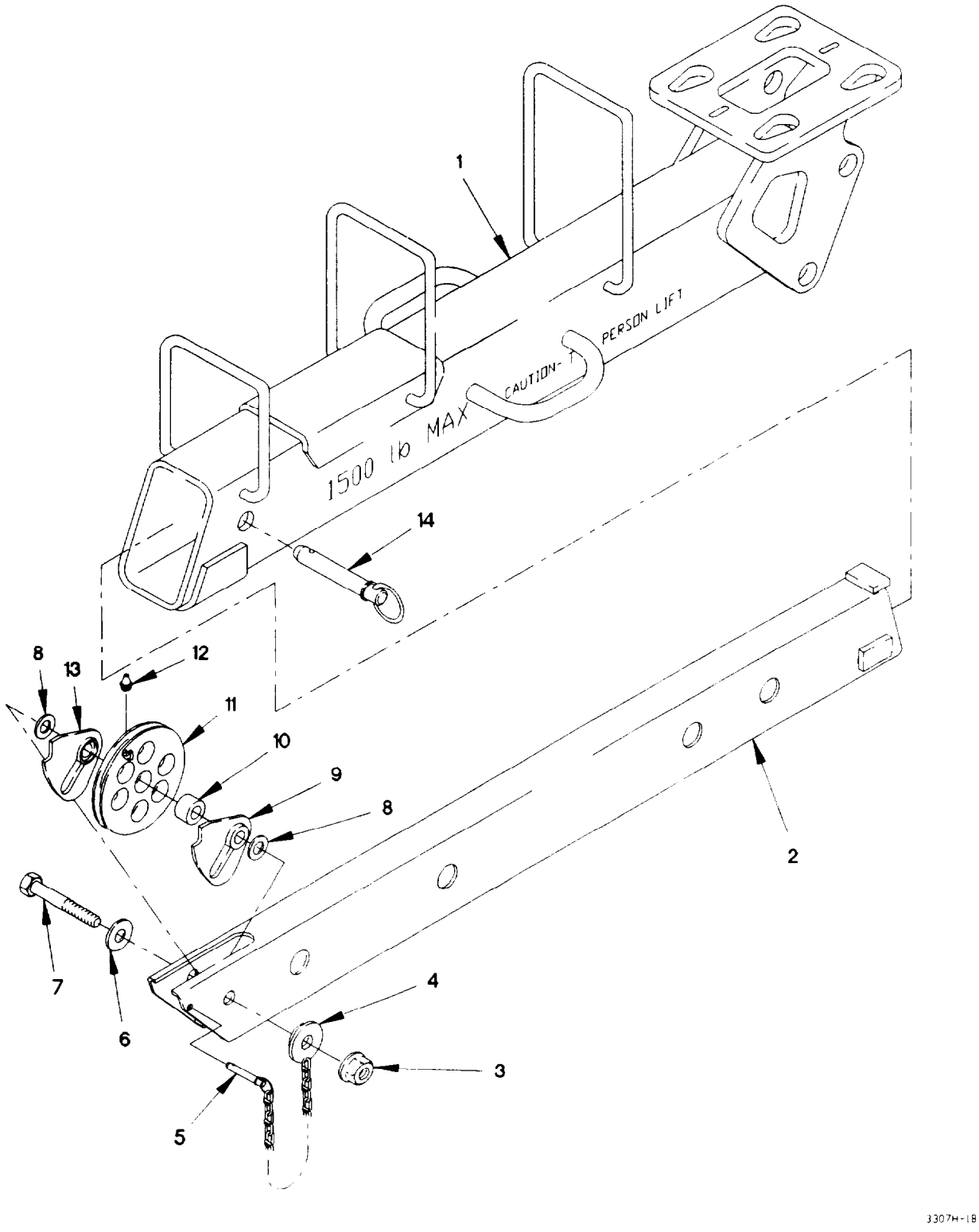

Figure 279. Light Material Handling Crane Boom Assembly

(1) ITEM NO	(2) SMR CODE	(3) FSCM	(4) PART NUMBER	(5) DESCRIPTION AND USABLE ON CODE (UOC)	(6) QTY
				GROUP 3307: SPECIAL PURPOSE KITS FIG. 279 LIGHT MATERIAL HANDLING CRANE BOOM ASSEMBLY	
1	XDFZZ	12361	2-195-9-00577	BASE WELD UOC: LAB, LAC, LWB, LWC,	1
2	PAFZZ	12361	2-195-9-00576	FLY WELD UOC: LAB, LAC, LWB, LWC,	1
3	PAOZZ	96906	MS51922-49	NUT, SELF-LOCKING, HE 5/8-11 UOC: LAB, LAC, LWB, LWC,	1
4	PAOZZ	12361	2-195-9-00582	CHAIN ASSEMBLY, SING UOC: LAB, LAC, LWB, LWC,	1
5	PAOZZ	09332	C5-20R	PIN, QUICK RELEASE UOC: LAB, LAC, LWB, LWC,	1
6	PAOZZ	96906	MS27183-20	WASHER, FLAT 19/32 UOC: LAB, LAC, LWB, LWC,	1
7	PAOZZ	80204	B1821BH063C350N	SCREW, CAP, HEXAGON H 5/8-11 X 3 1/2 UOC: LAB, LAC, LWB, LWC,	1
8	PAOZZ	96652	36-03	WASHER, FLAT UOC: LAB, LAC, LWB, LWC,	2
9	PAOZZ	12361	2-195-9-00581	DETENT PLATE UOC: LAB, LAC, LWB, LWC,	1
10	PAOZZ	12361	7-199-002668	BUSHING, SLEEVE UOC: LAB, LAC, LWB, LWC,	1
11	PFOZZ	12361	6-718-001106	PULLEY, GROOVE UOC: LAB, LAC, LWB, LWC,	1
12	PAOZZ	96906	MS15002-1	FITTING, LUBRICATION 1/4-28UNF UOC: LAB, LAC, LWB, LWC,	1
13	PAOZZ	12361	2-195-9-00580	DETENT PLATE UOC: LAB, LAC, LWB, LWC,	1
14	PAOZZ	09332	D16-30R	PIN, QUICK RELEASE UOC: LAB, LAC, LWB, LWC,	1
				END OF FIGURE	

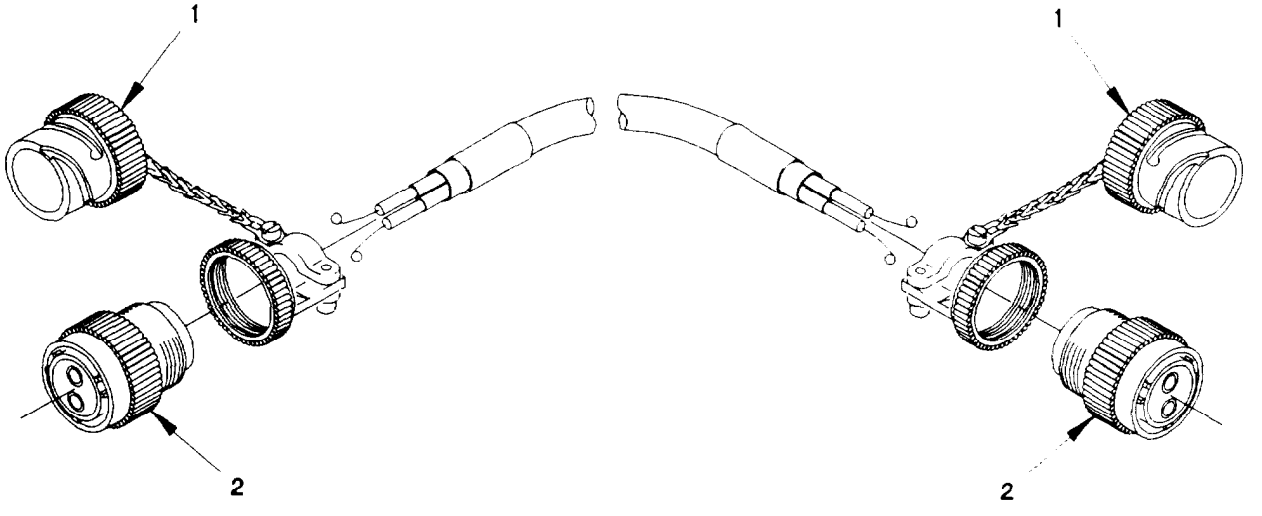

3307G-1B

Figure 280. Light Material Handling Crane Extension Cable

(1) ITEM NO	(2) SMR CODE	(3) FSCM	(4) PART NUMBER	(5) DESCRIPTION AND USABLE ON CODE (UOC)	(6) QTY
				GROUP 3307: SPECIAL PURPOSE KITS FIG. 280 LIGHT MATERIAL HANDLING CRANE EXTENSION CABLE	
1	PAFZZ	71468	CA121004-9	PLUG, QUICK DISCONNE UOC: LAB, LAC, LWB, LWC,	2
2	PAFZZ	12361	7-892-000839	CONNECTOR, PLUG, ELEC UOC: LAB, LAC, LWB, LWC,	2
				END OF FIGURE	

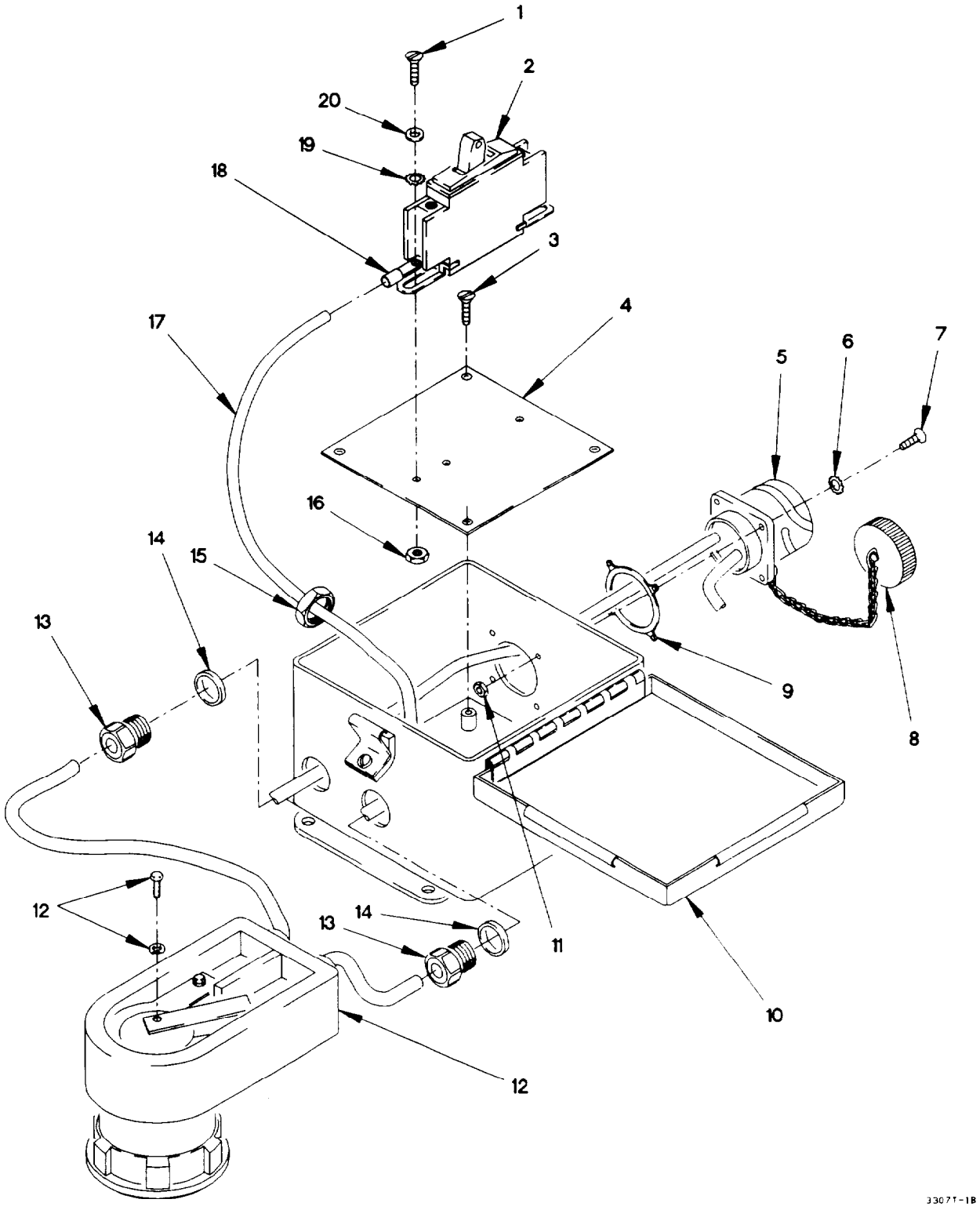

Figure 281. Light Material Handling Crane Plug and Circuit Breaker

(1) ITEM NO	(2) SMR CODE	(3) FSCM	(4) PART NUMBER	(5) DESCRIPTION AND USABLE ON CODE (UOC)	(6) QTY
				GROUP 3307: SPECIAL PURPOSE KITS FIG. 281 LIGHT MATERIAL HANDLING CRANE PLUG AND CIRCUIT BREAKER	
1	PAFZZ	12361	7-111-080410	SCREW, MACHINE UOC: LAB, LAC, LWB, LWC,	2
2	PAFZZ	03010	QOU150	CIRCUIT BREAKER UOC: LAB, LAC, LWB, LWC,	1
3	PAFZZ	96906	MS35206-320	SCREW, MACHINE #2-56 X 9/16 UOC: LAB, LAC, LWB, LWC,	4
4	PAFZZ	12361	6-679-002455	COVER, ACCESS UOC: LAB, LAC, LWB, LWC,	1
5	PAFZZ	12361	7-892-000853	CONNECTOR, RECEPTACL UOC: LAB, LAC, LWB, LWC,	1
6	PAFZZ	96906	MS51414-1	WASHER, LOCK NO. 6 UOC: LAB, LAC, LWB, LWC,	4
7	PAFZZ	96906	MS35206-230	SCREW, MACHINE #6-32 X 1/2 UOC: LAB, LAC, LWB, LWC,	4
8	PAFZZ	71468	CA121003-9	CAP-PLUG, PROTECTIVE UOC: LAB, LAC, LWB, LWC,	1
9	PAFZZ	77820	10-36675-18	GASKET UOC: LAB, LAC, LWB, LWC,	1
10	XAFZZ	12361	6-176-002165	BOX UOC: LAB, LAC, LWB, LWC,	1
11	PAFZZ	96906	MS35649-262	NUT, PLAIN, HEXAGON 1/8 X 32 UOC: LAB, LAC, LWB, LWC,	4
12	PAFZZ	12361	7-709-000824	CONNECTOR, PLUG, ELEC UOC: LAB, LAC, LWB, LWC,	1
13	PAFZZ	56501	2521	BOX CONNECTOR, ELECT UOC: LAB, LAC, LWB, LWC,	2
14	PAFZZ	13508	5262	SEAL, PLAIN ENCASED UOC: LAB, LAC, LWB, LWC,	2
15	PAFZZ	96906	MS51922-33	NUT, SELF-LOCKING, HE 1/2-13 UOC: LAB, LAC, LWB, LWC,	2
16	PAFZZ	96906	MS35649-282	NUT, PLAIN, HEXAGON 5/32-32 UOC: LAB, LAC, LWB, LWC,	2
17	MFFZZ	12361	6-512-001842	HARNESS ASSY MAKE FROM WIRE P/N: MW-C6(133) J4 (81349) X 17 IN UOC: LAB, LAC, LWB, LWC,	1
18	PAFZZ	96906	MS25036-122	TERMINAL, LUG UOC: LAB, LAC, LWB, LWC,	2
19	PAFZZ	96906	MS51414-2	WASHER, LOCK NO. 8 UOC: LAB, LAC, LWB, LWC,	2
20	PAFZZ	96906	MS27183-41	WASHER, FLAT 3/16 UOC: LAB, LAC, LWB, LWC,	2
				END OF FIGURE	

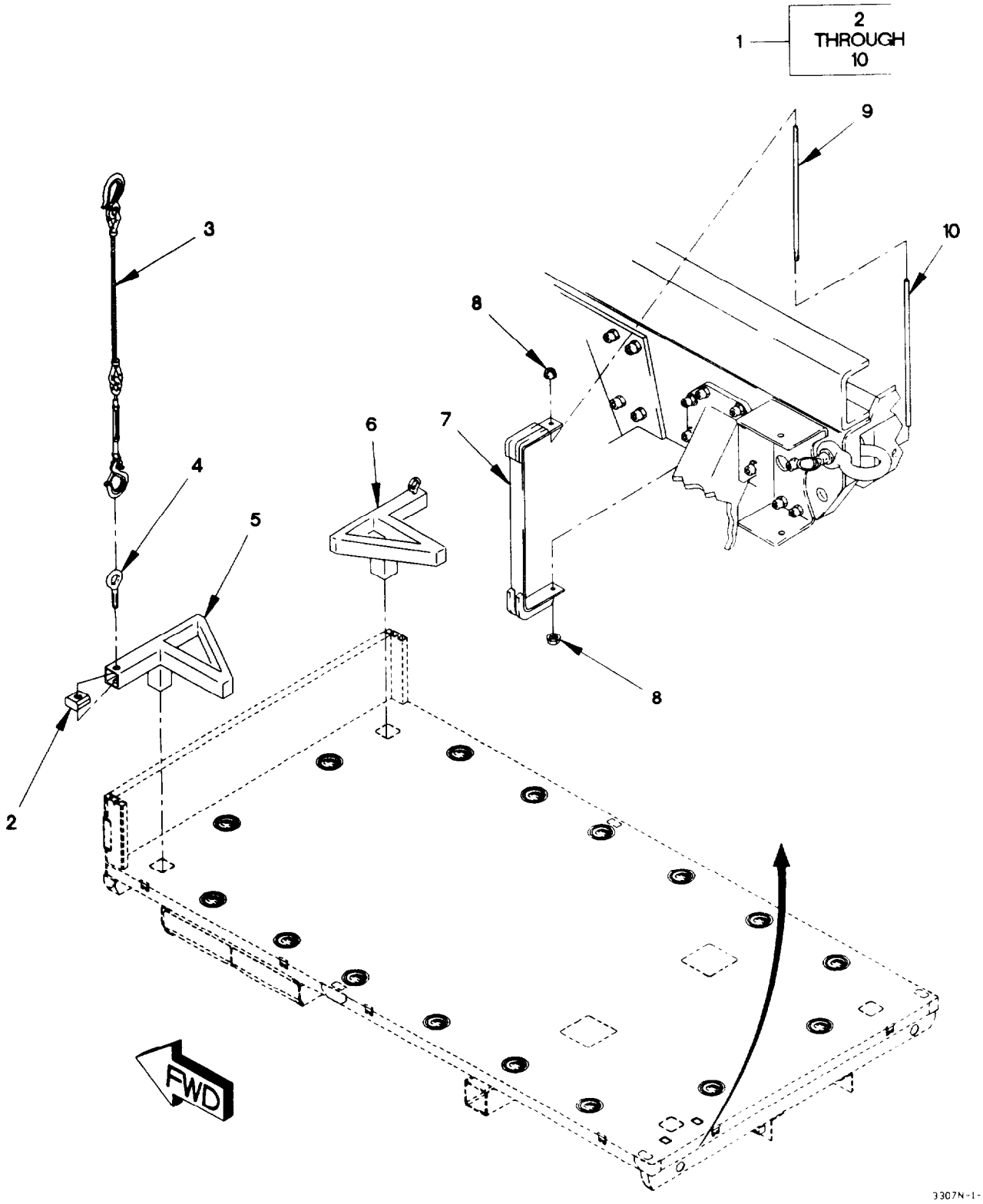

Figure 282. Shelter Tiedown Kit

(1) ITEM NO	(2) SMR CODE	(3) FSCM	(4) PART NUMBER	(5) DESCRIPTION AND USABLE ON CODE (UOC)	(6) QTY
				GROUP 3307: SPECIAL PURPOSE KITS FIG. 282 SHELTER TIE-DOWN KIT	
1	PDOZZ	19207	57K1952	TIEDOWN KIT, SHELTER SHELTER UOC: LAB, LWB,	1
2	PAOZZ	19207	12422058	.BLOCK, THREADED UOC: LAB, LWB,	4
3	PAOZZ	19207	12421820	.CABLE ASSEMBLY UOC: LAB, LWB,	4
4	PAOZZ	96906	MS51937-10	.BOLT, EYE UOC: LAB, LWB,	4
5	PAOZZ	19207	12422059-001	.TIEDOWN, SHELTER UOC: LAB, LWB,	2
6	PAOZZ	19207	12422059-002	.TIEDOWN, SHELTER UOC: LAB, LWB,	2
7	PAOZZ	19207	12422055	.CLAMP, RAIL UOC: LAB, LWB,	2
8	PAOZZ	19207	12414308-022	.NUT, SELF-LOCKING, EX M12 X 1.75 UOC: LAB, LWB,	4
9	PAOZZ	19207	12422053	.TIE ROD UOC: LAB, LWB,	2
10	PAOZZ	19207	12422054	.TUBE, SPACER UOC: LAB, LWB,	2
				END OF FIGURE	

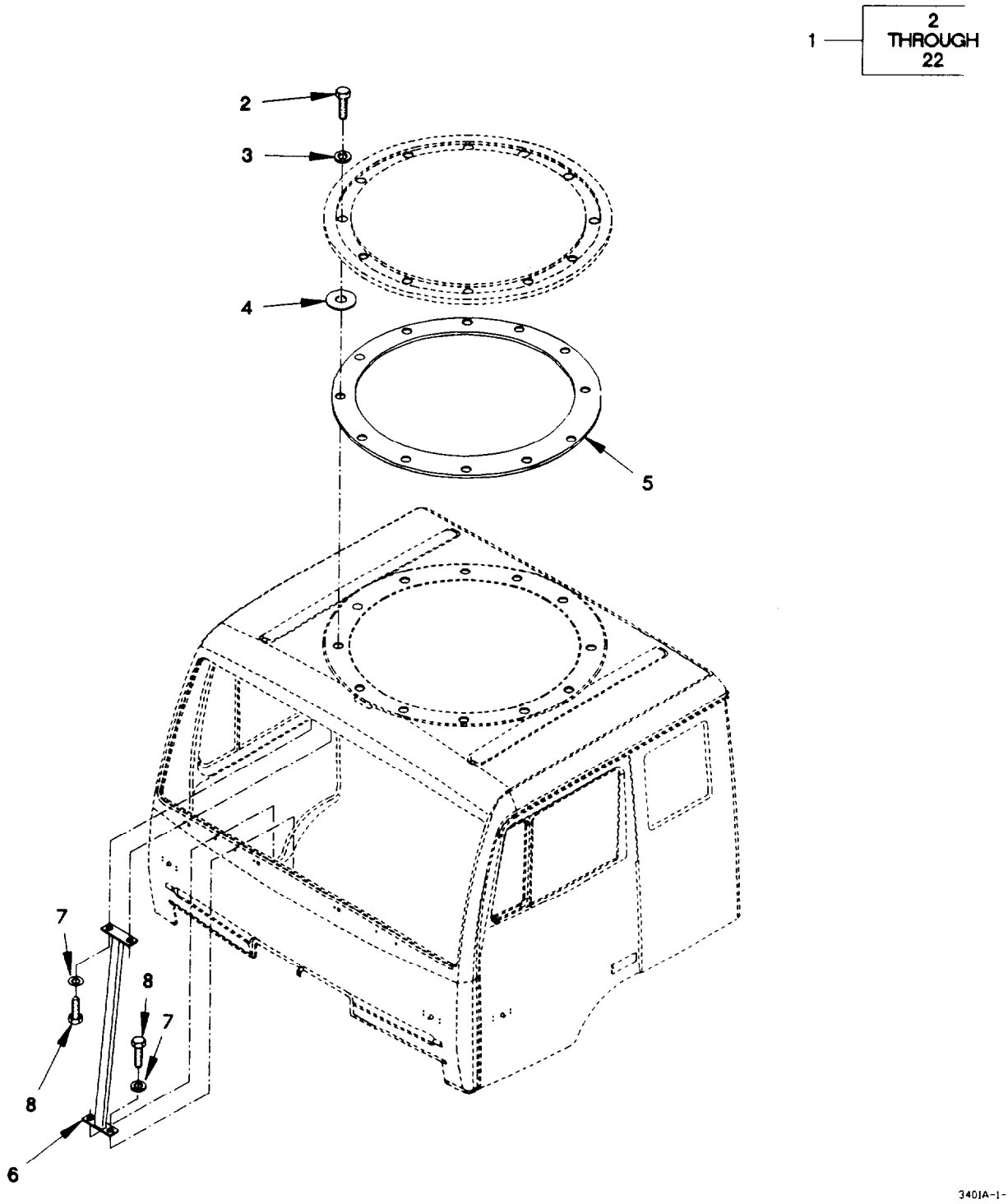

Figure 283. Machine Gun Mounting Kit (Sheet 1 of 2)

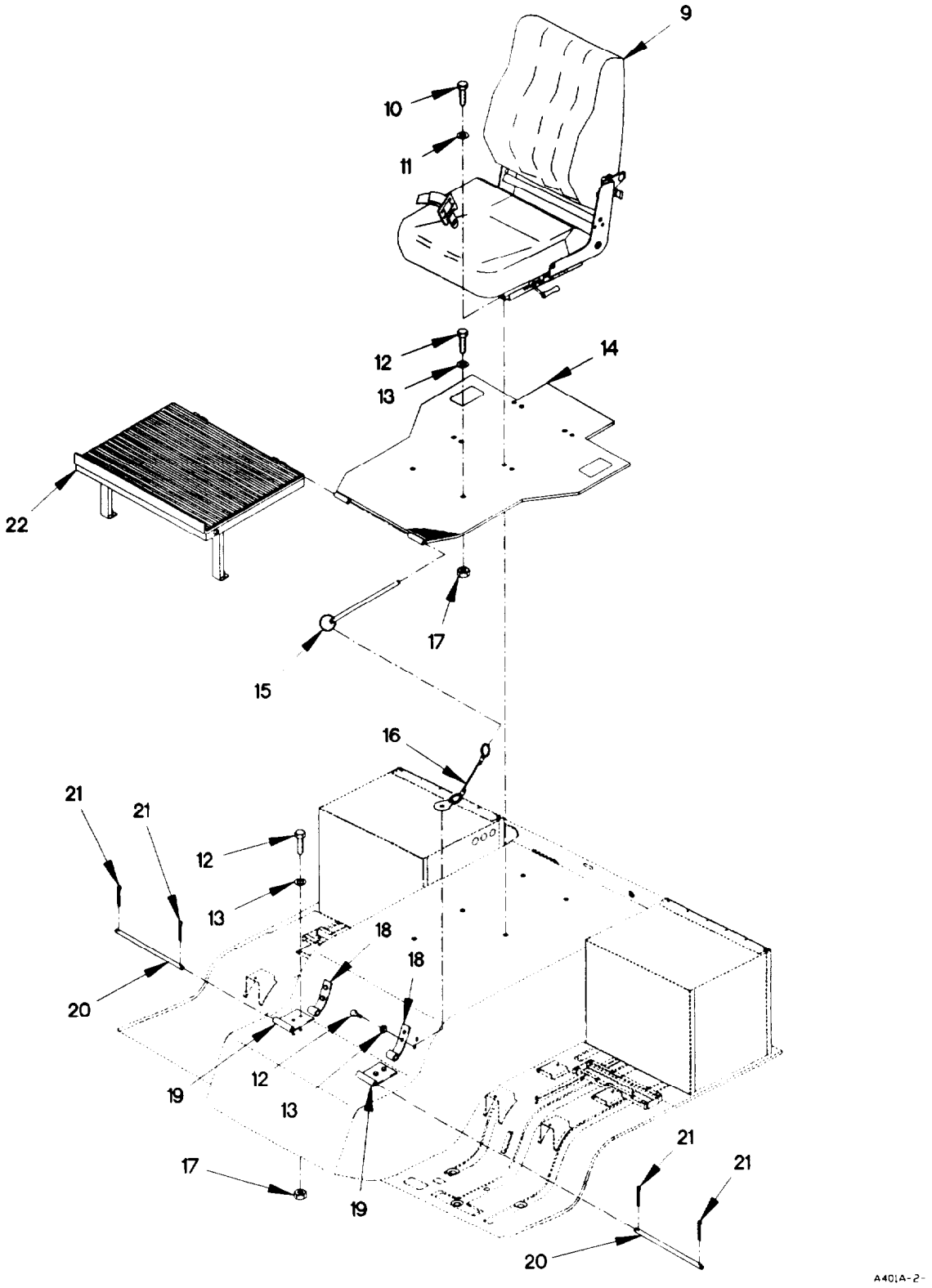

Figure 283. Machine Gun Mounting Kit (Sheet 2 of 2)

(1) ITEM NO	(2) SMR CODE	(3) FSCM	(4) PART NUMBER	(5) DESCRIPTION AND USABLE ON CODE (UOC)	(6) QTY
				GROUP 3401: PRIMARY ARMAMENT FIG. 283 MACHINE GUN MOUNTING KIT	
1	PDOZZ	19207	57K1224	MOUNT, MACHIINE GUN	1
2	PAOZZ	19207	12414419-136	.SCREW, CAP, HEXAGON H M12 X 1.75 X 40	12
3	PAOZZ	21969	A 13 DIN125-ST	.WASHER, FLAT M13	12
4	PAOZZ	19207	12417948-005	.WASHER, FLAT 44MM OD, M12MM THK	12
5	PAOZZ	19207	12418327	.SPACER, RING	1
6	PAOZZ	19207	12417568	.FRAME SECTION, STRUC	1
7	PAOZZ	0FW39	12414582-004	.SPACER, SLEEVE	4
8	PAOZZ	15526	933-M8X20	.SCREW, CAP, HEXAGON H M8 X 1.25 X 20	4
9	PAOZZ	62266	8.5746	.SEAT, VEHICULAR	1
10	PAOZZ	81495	071 408 32	.BOLT, MACHINE M8 X 1.25 X 25	4
11	PAOZZ	34914	990 3861	.WASHER, FLAT M8.4	4
12	PAOZZ	56161	10503805	.SCREW, CAP, HEXAGON H M6 X 1 X 20	10
13	PAOZZ	19200	12524631-1	.WASHER, FLAT M6	10
14	PAOZZ	19207	12418362-004	.BRACKET, VEHICULAR C	1
15	PAOZZ	19207	12418366-013	.PIN	2
16	PAOZZ	84256	50996-8W	.WIRE ROPE ASSEMBLY MAKE FROM WIRE P/N: M83420/4-005 (81349) X 16MM	1
17	PAOZZ	84256	ALS3-610-4.2	.NUT, PLAIN, CLINCH M6X1.0 (GRIP RANGE 0.7 - 4.20)	10
18	PAOZZ	19207	12420484	.BRACKET, MOUNTING	2
19	PAOZZ	19207	12420483	.HINGE, BUTT	2
20	PAOZZ	19207	12420482	.PIN, STRAIGHT, HEADLE	2
21	PAOZZ	96906	MS24665-385	.PIN, COTTER	4
22	PAOZZ	19207	12418366-012	.FRAME SECTION, STRUC	1

END OF FIGURE

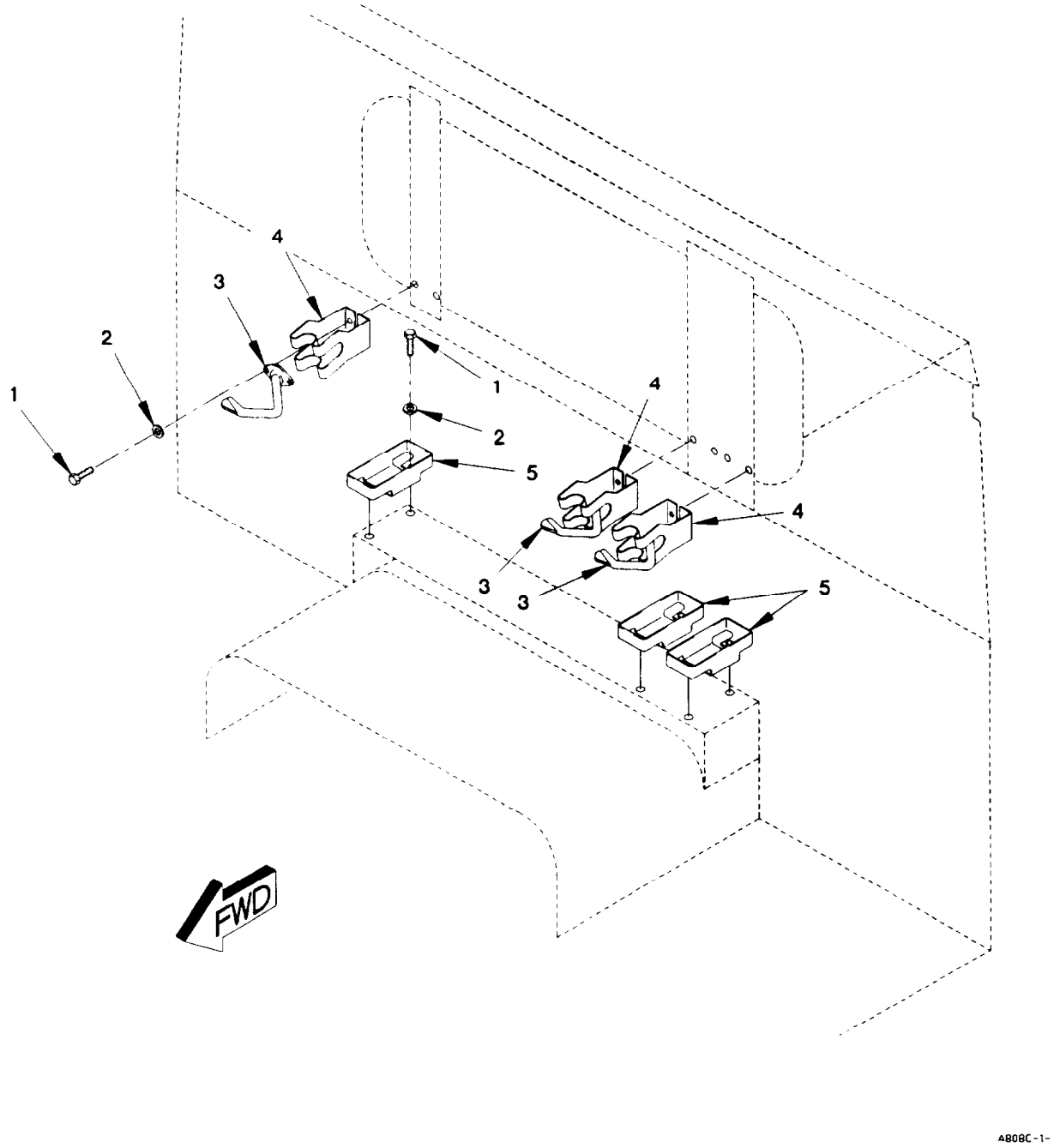

Figure 284. Small Arms Mount

(1) ITEM NO	(2) SMR CODE	(3) FSCM	(4) PART NUMBER	(5) DESCRIPTION AND USABLE ON CODE (UOC)	(6) QTY
				GROUP 3402: SMALL ARMS	
				FIG. 284 SMALL ARMS MOUNT	
1	PAOZZ	56161	10503657	SCREW, CAP, HEXAGON H M5 X .8 X 12	12
2	PAOZZ	19207	12414473-010	WASHER, FLAT M5.5	12
3	PAOZZ	19207	11630529	RACK, STORAGE, SMALL	3
4	PAOZZ	19207	11630581	BRACKET, MOUNTING, CA	3
5	PAOZZ	19207	11630594	SUPPORT, RIFLE MOUNT	3
				END OF FIGURE	

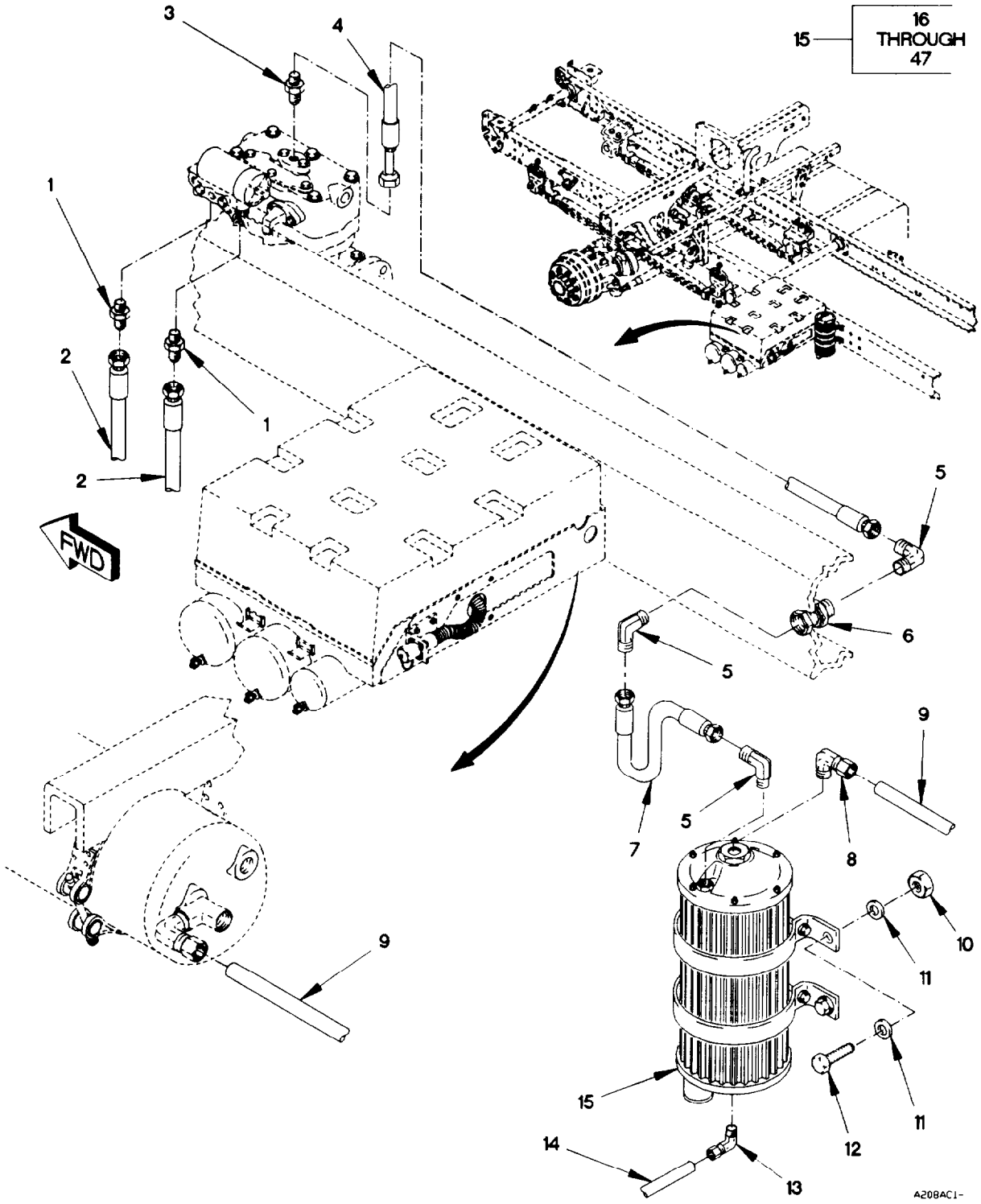

Figure 285. Air Dryer, Hoses, and Fittings (Sheet 1 of 2)

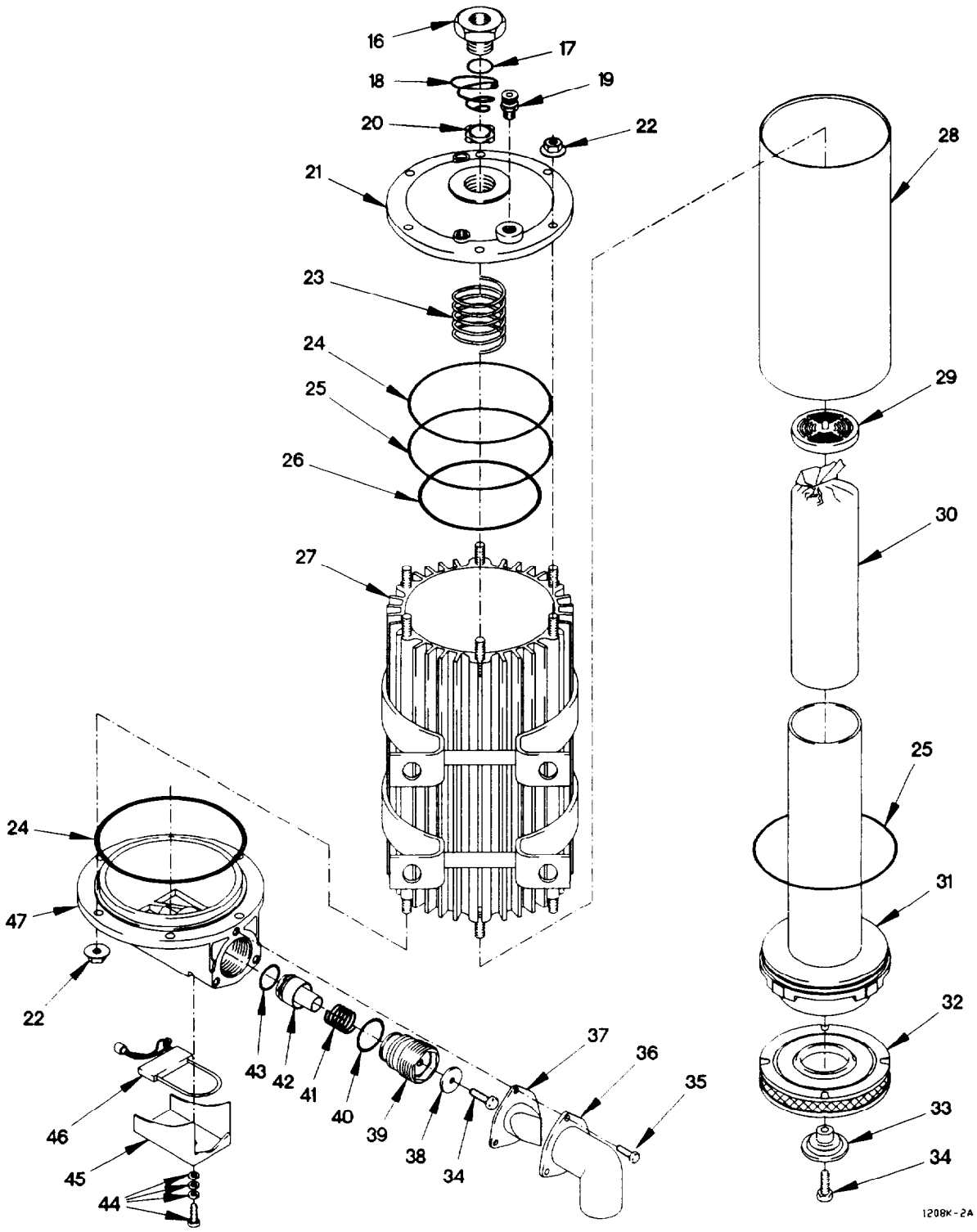

Figure 285. Air Dryer, Hoses, and Fittings (Sheet 2 of 2)

(1) ITEM NO	(2) SMR CODE	(3) FSCM	(4) PART NUMBER	(5) DESCRIPTION AND USABLE ON CODE (UOC)		(6) QTY
				GROUP 4321: TANKS OR RESERVOIRS FIG. 285 AIR DRYER, HOSES AND FITTINGS		
1	PAOZZ	81343	4-2 010102S	ADAPTER, STRAIGHT, PI		2
2	PAOZZ	19207	12417926-004	HOSE ASSEMBLY, NONME		2
3	PAOZZ	96906	MS35869-45	ADAPTER, STRAIGHT, PI		1
4	PAOZZ	19207	12417926-001	HOSE ASSEMBLY, NONME		1
5	PAOZZ	11083	7S7369	ELBOW, PIPE TO TUBE		3
6	PAOZZ	30327	129-B-08X24	COUPLING, PIPE		1
7	PAOZZ	19207	12417926-002	HOSE ASSEMBLY, NONME		1
8	PAOZZ	81343	10-8 100202BA	ELBOW, PIPE TO TUBE		1
9	MOOZZ	19207	12420572-010X	HOSE, NONMETALLIC MAKE FROM HOSE P/N: PFT-10B-BLK-100 (61424) CUT TO LENGTH		1
10	PAOZZ	19207	12414315-009	NUT, SELF-LOCKING, HE M10 X 1.5		4
11	PAOZZ	19207	12414473-014	WASHER, FLAT M10		8
12	PAOZZ	15526	DIN933-M10X35-8.8-A4C	SCREW, CAP, HEXAGON H M10 X 1.5 X 35		4
13	PAOZZ	81343	4-2 100202BA	ELBOW, PIPE TO TUBE		1
14	MOOZZ	19207	12420572-004X	TUBING, NONMETALLIC MAKE FROM HOSE P/N: NT-10004-BLK (79470), CUT TO LENGTH	V	
15	PAOZZ	0FW39	12414366-001	AIR DRIER AND COOLE AIR DRYER		1
16	PAOZZ	06721	N13552AD	.TAILPIECE, VALVE		1
17	KFOZZ	06721	N11728GP	.PACKING, PREFORMED PART OF KIT P/N RN-60-A		1
18	XDOZZ	06721	602000-FP	.CHECK VALVE SPRING		1
19	PAOZZ	06721	N-30250-A	.VALVE, RELIEFT, PRESSU		1
20	KFOZZ	06721	C11472J	.SEAL, CHECK VALVE PART OF KIT P/N RN-60-A		1
21	XDOZZ	06721	400156-A	.TOP COVER		1
22	PAOZZ	96906	MS51967-5	.NUT, PLAIN, HEXAGON 5/16-18		10
23	XDOZZ	06721	602000-GW	.SPRING		1
24	KFOZZ	06721	N-11728-SZ	.O-RING PART OF KIT P/N RN-60-A		2
25	KFOZZ	06721	N-11728-SV	.O-RING PART OF KIT P/N RN-60-A		2
26	KFOZZ	06721	N-11728-ST	.O-RING PART OF KIT P/N RN-60-A		1
27	XAOZZ	06721	300527	.AIR DRYER HOUSING		1
28	XDOZZ	06721	201054-A	.CYLINDER		1
29	XDOZZ	06721	102642	.DESICCANT FOLLOWER		1
30	KFOZZ	06721	102664A	.CARTRIDGE, SERVICE PART OF KIT P/N RN-60-A		1
31	XDOZZ	06721	400158	.DESICCANT CANISTER		1
32	PAOZZ	06721	100696E	.FILTER ELEMENT, INTA PART OF KIT P/N RN-60-A		1
33	XDOZZ	06721	102643	.FILTER RETAINER		1
34	XDOZZ	06721	30-X-402	.SCREW		2
35	KFOZZ	06721	26W31008	.SCREW, TAPPING 10 X 1/2 PART OF KIT P/N DQ-6025		3

(1) ITEM NO	(2) SMR CODE	(3) FSCM	(4) PART NUMBER	(5) DESCRIPTION AND USABLE ON CODE (UOC)	(6) QTY
36	PAOZZ	06721	102651	.ELBOW, FLANGE TO HOS PART OF KIT P/N DQ-6025	1
37	KFOZZ	06721	N-14149-F	.BOOT, EXAUST PART OF KIT P/N DQ-6025	1
38	KFOZZ	06721	N10949F	.SEAL, PURGE VALVE PART OF KIT P/N RN-60-A	1
39	XDOZZ	06721	201051-A	.VALVE	1
40	KFOZZ	06721	N11728BC	.PACKING, PREFORMED PART OF KIT P/N RN-60-A	1
41	XDOZZ	06721	602000-HG	.SPRING	1
42	XDOZZ	06721	102636-A	.PURGE PISTON	1
43	KFOZZ	06721	N11728GT	.PACKING, PREFORMED PART OF KIT P/N RN-60-A	1
44	XDOZZ	06721	30-X-901	.BOLT	1
45	XDOZZ	06721	201117	.LOWER COVER	1
46	XDOZZ	06721	201089-G	.HEATER	1
47	XDOZZ	06721	201047-AA	.LOWER COVER	1

END OF FIGURE

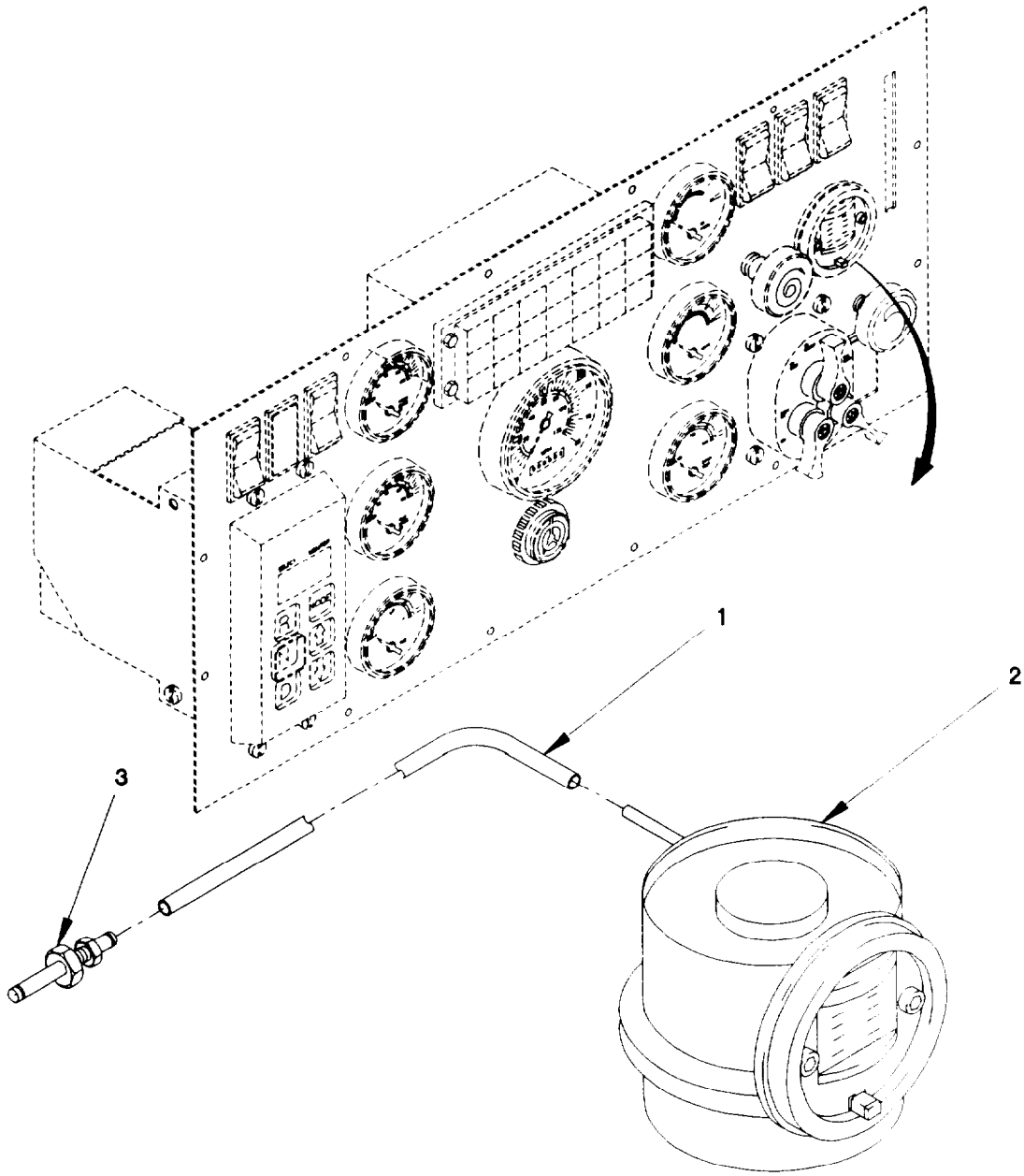

4705A-1-

Figure 286. Air Filter Warning Indicator

(1) ITEM NO	(2) SMR CODE	(3) FSCM	(4) PART NUMBER	(5) DESCRIPTION AND USABLE ON CODE (UOC)	(6) QTY
				GROUP 4702: GAGES, MOUNTING, LINES, AND FITTINGS	
				FIG. 286 AIR FILTER WARNING INDICATOR	
1	PAOZZ	59150	1775-822	HOSE, NONMETALLIC	1
2	PAOZZ	59150	1755-725	INDICATOR, FILTER WA	1
3	PAOZZ	0TE27	1074X4	CONNECTOR, HOSE, BULK	1
				END OF FIGURE	

(1) ITEM NO	(2) SMR CODE	(3) FSCM	(4) PART NUMBER	(5) DESCRIPTION AND USABLE ON CODE (UOC)	(6) QTY
				GROUP 9501: BULK MATERIEL, COMMON FIG. BULK BULK ITEMS	
1	PAOZZ	30327	A110	HOSE, NONMETALLIC	V
2	PAOZZ	81346	A269-55GRADETP304	TUBE, METALLIC	V
3	PAOZZ	81343	A52426-1K	HOSE, NONMETALLIC	V
5	POFZZ	81349	C0-01HGF (1/6) 0520	WIRE, ELECTRICAL UOC: LAB, LAC, LWB, LWC,	V
6	PAOZZ	13174	C608-100BLK	HOSE, NONMETALLIC	V
7	PAOZZ	81343	J844TYBSIZE 3/8 BLACK	HOSE, NONMETALLIC	V
8	PAOZZ	78280	LP-3239-120	TUBING, NONMETALLIC	V
9	PAOZZ	81349	MIL-F-21840	FASTENER TAPE, HOOK CLASS II TYPE I X 1 1/2 IN. WIDE	V
10	PAOZZ	70628	MILH8796	HOSE, AIR DUCT	V
11	PAFZZ	81349	MW-C6 (133) J4	WIRE, ELECTRICAL UOC: LAB, LAC, LWB, LWC,	V
12	PAOZZ	81349	M16878/14BKE9	WIRE, ELECTRICAL UOC: LAD, LWD,	V
13	PAOZZ	81349	M16878/14BKE90	WIRE, ELECTRICAL UOC: LAD, LWD,	V
14	PAOZZ	81349	M16878/14BKE91	WIRE, ELECTRICAL UOC: LAD, LWD,	V
15	PAOZZ	81349	M16878/14BKE92	WIRE, ELECTRICAL UOC: LAD, LWD,	V
16	PAOZZ	81349	M16878/16-BKE0	WIRE, ELECTRICAL UOC: LAD, LWD,	V
17	PAOZZ	81349	M16878/16-BKE1	WIRE, ELECTRICAL UOC: LAD, LWD,	V
18	PAOZZ	81349	M16878/16-BKE2	WIRE, ELECTRICAL UOC: LAD, LWD,	V
19	PAOZZ	81349	M16878/16-BKE4	WIRE, ELECTRICAL UOC: LAD, LWD,	V
20	PAOZZ	81349	M16878/16-BKE5	WIRE, ELECTRICAL UOC: LAD, LWD,	V
21	PAOZZ	81349	M16878/16-BKE6	WIRE, ELECTRICAL UOC: LAD, LWD,	V
22	PAOZZ	81349	M16878/16-BKE9	WIRE, ELECTRICAL UOC: LAD, LWD,	V
23	PAOZZ	81349	M16878/16-BLE0	WIRE, ELECTRICAL UOC: LAD, LWD,	V
24	PAOZZ	81349	M16878/16-BLE1	WIRE, ELECTRICAL UOC: LAD, LWD,	V
25	PAOZZ	81349	M16878/16-BLE2	WIRE, ELECTRICAL UOC: LAD, LWD,	V
26	PAOZZ	81349	M16878/16-BLE4	WIRE, ELECTRICAL UOC: LAD, LWD,	V

(1) ITEM NO	(2) SMR CODE	(3) FSCM	(4) PART NUMBER	(5) DESCRIPTION AND USABLE ON CODE (UOC)	(6) QTY
27	PAOZZ	81349	M16878/16-BLE5	WIRE, ELECTRICAL UOC: LAD, LWD,	V
28	PAOZZ	81349	M16878/16-BLE9	WIRE, ELECTRICAL UOC: LAD, LWD,	V
29	PAOZZ	81349	M16878/16-BLG6	WIRE, ELECTRICAL UOC: LAD, LWD,	V
30	PAOZZ	81349	M16878/16-BMG0	WIRE, ELECTRICAL UOC: LAD, LWD,	V
31	PAOZZ	81349	M16878/16-BMG2	WIRE, ELECTRICAL UOC: LAD, LWD,	V
32	PAOZZ	81349	M16878/16-BMG5	WIRE, ELECTRICAL UOC: LAD, LWD,	V
33	PAOZZ	81349	M16878/16-BMG6	WIRE, ELECTRICAL UOC: LAD, LWD,	V
34	PAOZZ	81349	M16878/16-BMG9	WIRE, ELECTRICAL UOC: LAD, LWD,	V
35	PAOZZ	81349	M16878/16-BPL0	WIRE, ELECTRICAL UOC: LAD, LWD,	V
36	PAOZZ	81349	M16878/16-BPL2	WIRE, ELECTRICAL UOC: LAD, LWD,	V
37	PAOZZ	81349	M16878/16-BPL5	WIRE, ELECTRICAL UOC: LAD, LWD,	V
38	PAOZZ	81349	M16878/16-BPL6	WIRE, ELECTRICAL UOC: LAD, LWD,	V
39	PAOZZ	81349	M16878/16-BPL9	WIRE, ELECTRICAL UOC: LAD, LWD,	V
40	PAOZZ	81349	M16878/16-BSL0	WIRE, ELECTRICAL UOC: LAD, LWD,	V
41	PAOZZ	81349	M16878/16-BSL2	WIRE, ELECTRICAL UOC: LAD, LWD,	V
42	PAOZZ	81349	M16878/16-BSL6	WIRE, ELECTRICAL UOC: LAD, LWD,	V
43	PAOZZ	81349	M16878/16-BSP5	WIRE, ELECTRICAL UOC: LAD, LWD,	V
44	PAOZZ	81349	M16878/16-BSP9	WIRE, ELECTRICAL UOC: LAD, LWD,	V
45	PAOZZ	81349	M16878/16BRL0	WIRE, ELECTRICAL	V
46	PAOZZ	81349	M16878/16BUS0	WIRE, ELECTRICAL	V
47	PAOZZ	81349	M16878/16BWT0	WIRE, ELECTRICAL	V
48	PAOZZ	81349	M62217/1-10-BULK	HOSE, NONMETALLIC	V
49	PAOZZ	81349	M62217/1-10BULK	HOSE, NONMETALLIC UOC: LAD, LWD,	V
50	PAOZZ	81349	M62217/1-12-BULK LG	HOSE, NONMETALLIC	V
51	PAOZZ	81349	M62217/1-16BULK	HOSE, NONMETALLIC	V
52	PAOZZ	81349	M83420/4-005	ROPE, WIRE UOC: LAD, LWD,	V
53	PAOZZ	79470	NT-100-6	HOSE, NONMETALLIC	V

(1) ITEM NO	(2) SMR CODE	(3) FSCM	(4) PART NUMBER	(5) DESCRIPTION AND USABLE ON CODE (UOC)	(6) QTY
54	PAOZZ	79470	NT-10004-BLK	HOSE, NONMETALLIC	V
55	PAOZZ	61424	PFT-10B-BLK-100	HOSE, NONMETALLIC	V
56	PAOZZ	77060	R-67587	TUBING, NONMETALLIC UOC: LAD, LWD,	V
57	PAOZZ	77060	R-68234	TUBING, NONMETALLIC UOC: LAD, LWD,	V
58	PAOZZ	77060	R-71305	TUBING, NONMETALLIC	V
59	PAFZZ	81343	SAE J30R2TYPE1-1 /2 IN ID	HOSE, NONMETALLIC	V
60	PAFZZ	81343	SAE J30R2TYPE1-3 /8 IN ID	HOSE, NONMETALLIC UOC: LAA, LAD, LAC, LAD, LWB, LWC,	V
61	PAOZZ	0VXY8	STN2.38X.5	SEAL, NONMETALLIC ST UOC: LAC, LWC,	V
62	PAOZZ	78799	THINWALL1INCH	CONDUIT, METAL, RIGID UOC: LAD, LWD,	V
63	PAOZZ	71643	100S	TAPE, ADHESIVE, RUBBE UOC: LAD, LWD,	V
64	PAOZZ	0FW39	12417469	SEAL, NONMETALLIC SP	V
65	PAOZZ	0FW39	12420420-001	WEATHER STRIP	V
66	PAOZZ	0FW39	12420420-002	WEATHER STRIP UOC: LAC, LWC,	V
67	PAOZZ	0FW39	12420420-003	WEATHER STRIP UOC: LAA, LAD, LAC, LAD, LWB, LWC,	V
68	PAOZZ	19207	12420924-001	TUBING, NONMETALLIC UOC: LAD, LWD,	V
69	PAOZZ	0FW39	12420924-004	TUBING, NONMETALLIC	V
70	PAOZZ	0FW39	12420924-005	TUBING, NONMETALLIC	V
71	PAOZZ	19207	12420924-008	TUBING, CONVOLUTED	V
72	PAOZZ	0FW39	12421663-002	CONDUIT, METAL, FLEXABLE UOC: LAD, LWD,	V
73	PAOZZ	01276	1503-4	HOSE, NONMETALLIC	V
74	PAOZZ	56329	2418974-1	SEAL, NONMETALLIC UOC: LAD, LWD,	V
75	PAOZZ	00624	2565-6	HOSE, NONMETALLIC	V
76	PAOZZ	01276	2565-8	HOSE, NONMETALLIC UOC: LAD, LWD,	V
77	PAOZZ	01276	2766-8	HOSE, NONMETALLIC UOC: LWB, LWC, LWD,	V
78	PAOZZ	01276	2807-10	HOSE, NONMETALLIC	V
79	PAOZZ	01276	2807-4	HOSE, NONMETALLIC	V
80	PAOZZ	80244	33H581	HOSE, NONMETALLIC	V
81	PAOZZ	24234	352302	GASKET	V
82	PAOZZ	49185	483666	HOSE, NONMETALLIC	V
83	PAOZZ	93908	49005	CONDUIT, NONMETALLIC UOC: LAD, LWD,	V
84	PAOZZ	93908	49007	CONDUIT, NONMETALLIC UOC: LAD, LWD,	V
85	PAOZZ	93908	49008	CONDUIT, NONMETALLIC UOC: LAD, LWD,	V

(1) ITEM NO	(2) SMR CODE	(3) FSCM	(4) PART NUMBER	(5) DESCRIPTION AND USABLE ON CODE (UOC)	(6) QTY
86	PAOZZ	93908	49010	CONDUIT, NONMETALLIC UOC: LAD, LWD,	V
87	PAOZZ	93908	49011	CONDUIT, NONMETALLIC UOC: LAD, LWD,	V
88	PAOZZ	70898	50-534718-19	FASTENER TAPE, HOOK CLASS II TYPE I X 5/8 IN. WIDE	V
89	PAOZZ	79466	51231	CONDUIT, METAL, RIGID UOC: LAD, LWD,	V
90	PAOZZ	07687	6000140-9	FILTER MEDIA, AIR CO UOC: LAD, LWD,	V
91	PAOZZ	19207	8711054	HOSE, AIR DUCT	V
92	PAOZZ	98441	881-16	HOSE, NONMETALLIC	V

END OF FIGURE

Section III. SPECIAL TOOLS LIST

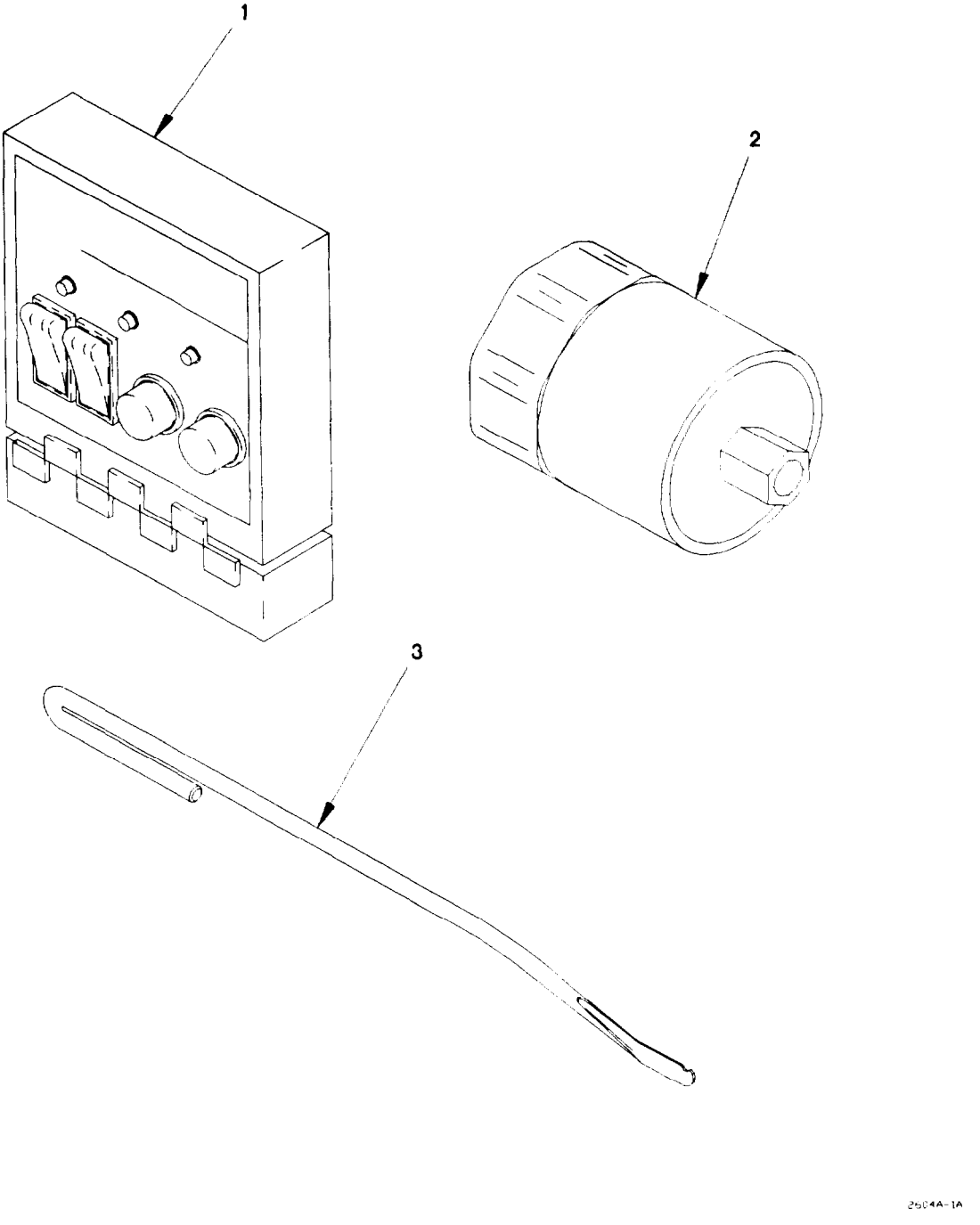

Figure 287. Unit Maintenance Special Tools

(1) ITEM NO	(2) SMR CODE	(3) FSCM	(4) PART NUMBER	(5) DESCRIPTION AND USABLE ON CODE (UOC)	(6) QTY
				GROUP 2604: SPECIAL TOOLS	
				FIG. 287 UNIT MAINTENANCE SPECIAL TOOLS	
1	PEOZZ	62380	440.280	TESTER, IGNITION SYS	1
2	PEOZZ	0FW39	90000003	SOCKET, SOCKET WRENC	1
3	PEOZZ	0FW39	90000001	REMOVAL TOOL, SPRING	1
				END OF FIGURE	

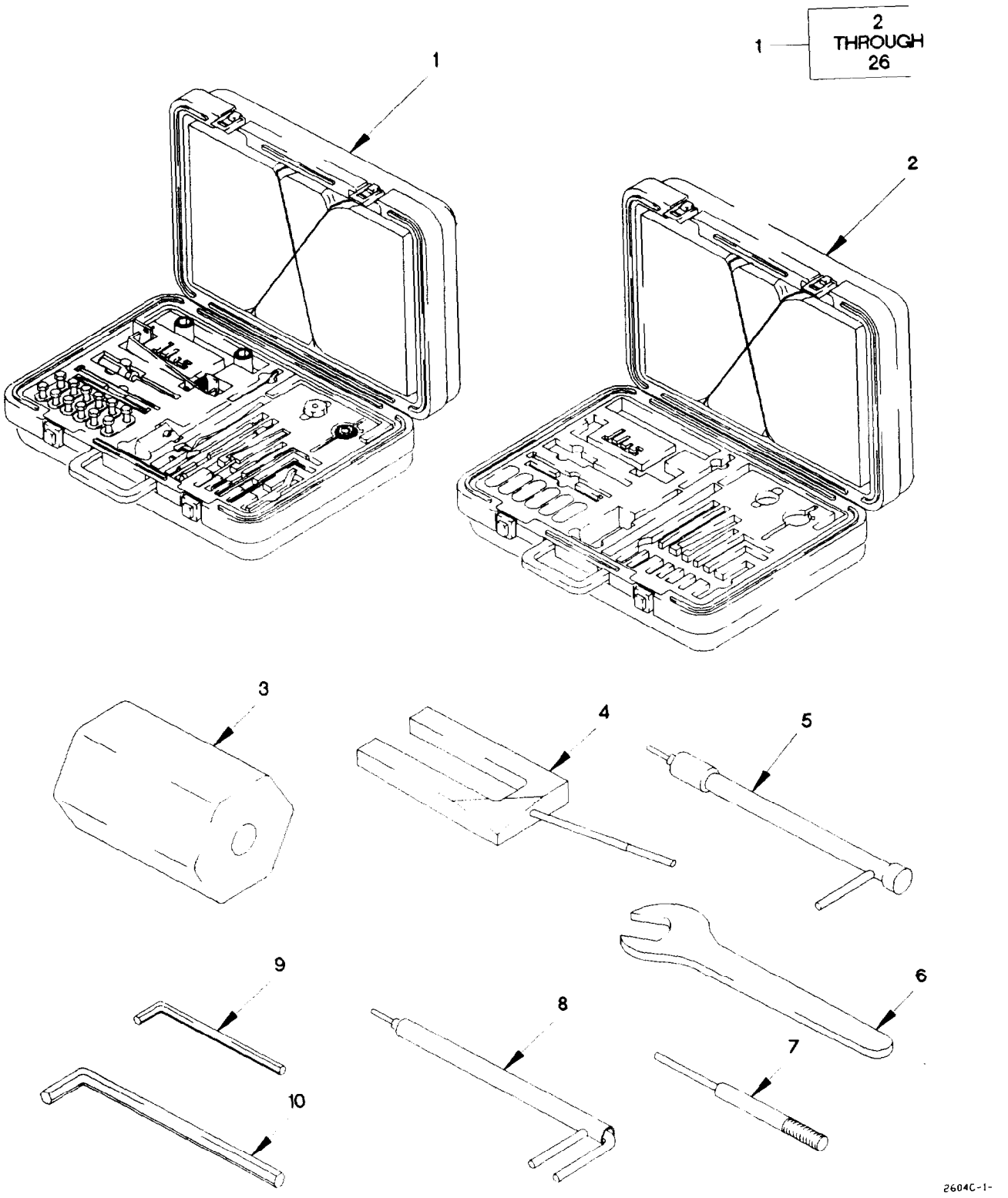

Figure 288. Direct Support Maintenance Special Tools (Sheet 1 of 4)

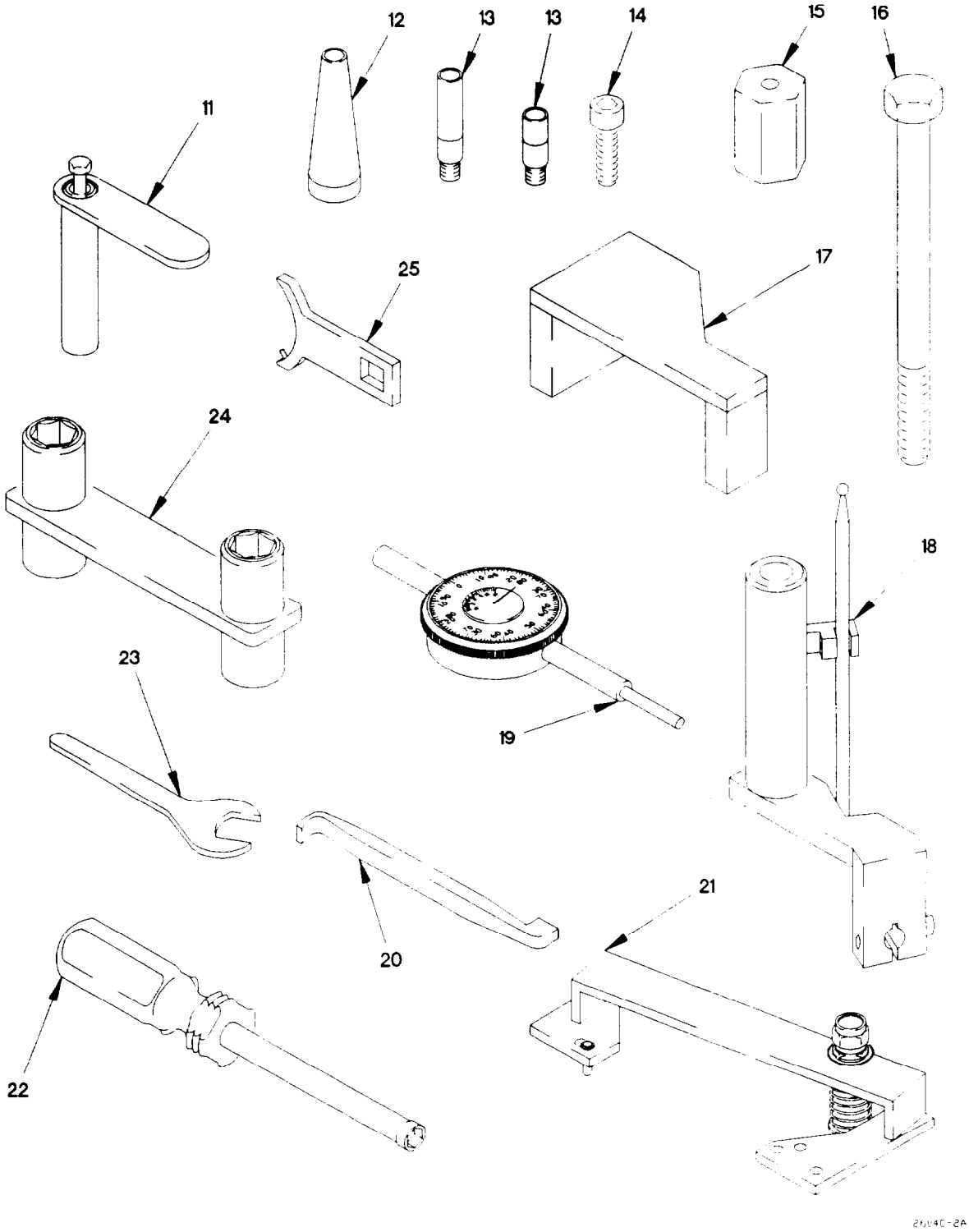

Figure 288. Direct Support Maintenance Special Tools (Sheet 2 of 4)

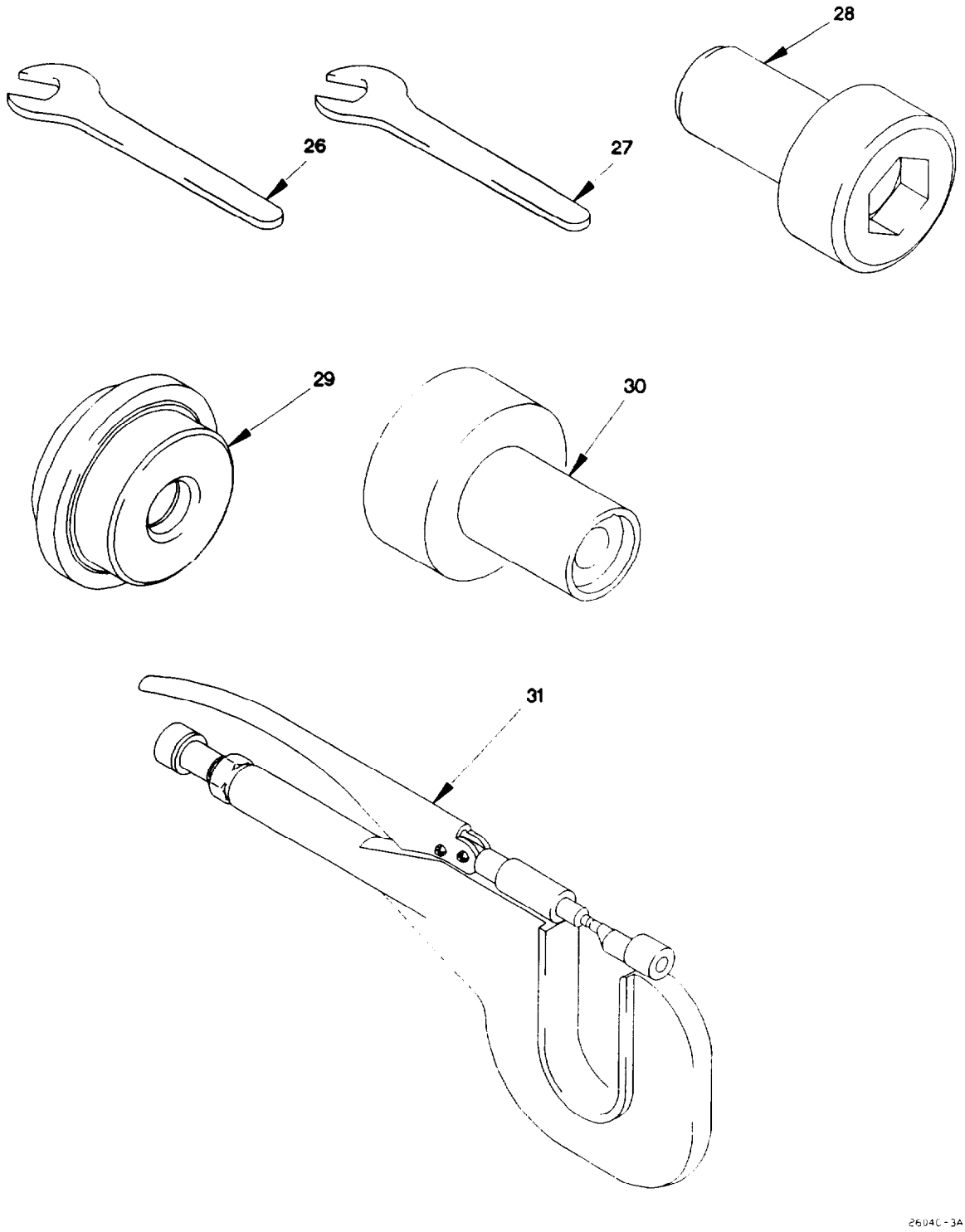

Figure 288. Direct Support Maintenance Special Tools (Sheet 3 of 4)

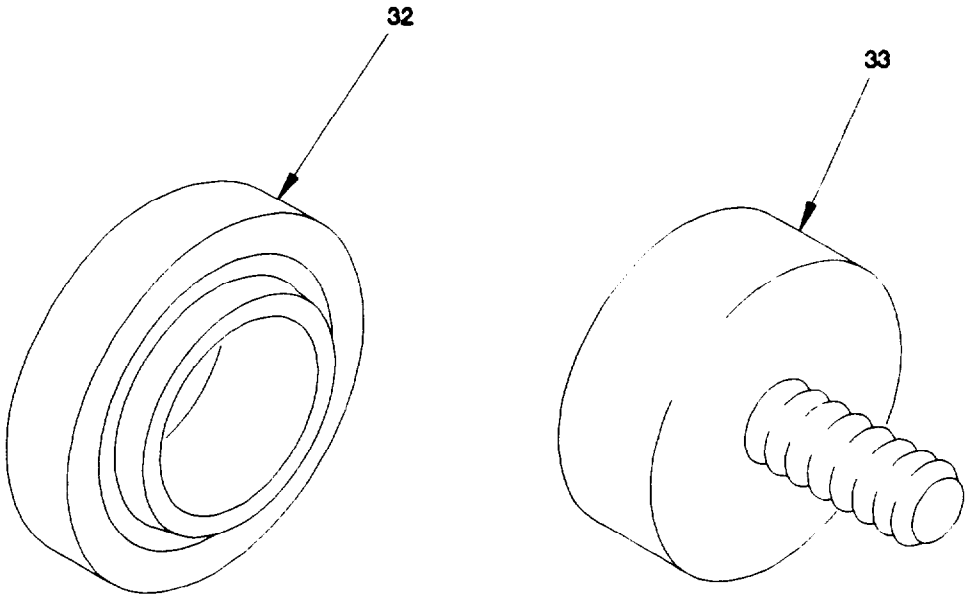

2604C-4A

Figure 288. Direct Support Maintenance Special Tools (Sheet 4 of 4)

(1) ITEM NO	(2) SMR CODE	(3) FSCM	(4) PART NUMBER	(5) DESCRIPTION AND USABLE ON CODE (UOC)	(6) QTY
				GROUP 2604: SPECIAL TOOLS FIG. 288 DIRECT SUPPORT MAINTENANCE SPECIAL TOOLS	
1	PEFFF	11083	1U6680	TOOL KIT, INTERNAL C	1
2	PEFZZ	11083	6V7145	.TOOL BOX, PORTABLE	1
3	PEFZZ	11083	1U8702	.ADJUSTOR, FUEL COMPO	1
4	PEFZZ	11083	5P4814	.COLLET, MAINTENANCE	1
5	PEFZZ	11083	1U7523	.INSERTER, PIN	1
6	PEFZZ	11083	1U6672	.WRENCH, ADJUSTABLE	1
7	PEFZZ	11083	1U7305	.INSERTER, PIN	1
8	PEFZZ	11083	1U8815	.CONTACT POINT, MEASU	1
9	PEFZZ	11083	1U7563	.KEY, SOCKET HEAD SCR	1
10	PEFZZ	11083	1U7564	.KEY, SOCKET HEAD SCR	1
11	PEFZZ	11083	1U6675	.COMPRESSOR, VALVE SP	6
12	PEFZZ	11083	5P4160	.CONTACT POINT, MEASU	1
13	PEFZZ	11083	3S3268	.CONTACT POINT, MEASU	1
14	PEFZZ	11083	4C5851	.INSERT, FUEL ADJUSTE	1
15	PEFZZ	11083	8T4177	.BOLT, MACHINE	6
16	PEFZZ	11083	8T7352	.BOLT, MACHINE	1
17	PEFZZ	11083	1U6678	.FIXTURE, INJECTOR AD	1
18	PEFZZ	11083	1U6679	.INDICATOR, DIAL	1
19	PEFZZ	11083	6V6106	.INDICATOR, DIAL	1
20	PEFZZ	11083	5P0302	.BAR GOVERNOR	1
21	PEFZZ	11083	4C4716	.FIXTURE, INJECTOR TI	1
22	PEFZZ	55719	NDM60A	.WRENCH, SOCKET	1
23	PEFZZ	11083	1U6673	.WRENCH, RATCHET	1
24	PEFZZ	11083	1U6681	.FINGER, MECHANICAL	1
25	PEFZZ	11083	9U5120	.WRENCH, SPANNER	1
26	PEFZZ	11083	6V7918	.WRENCH, OPEN END	2
27	PEFZZ	11083	1U9563	.WRENCH, OPEN END	1
28	PEFZZ	11083	8T0267	.BOLT, INTERNAL WRENC	1
29	PEFZZ	33287	J38566	INSERTER, BEARING AN	1
30	PEFZZ	33287	J-38548-1	GAGE, PROFILE	1
31	PEFZZ	33287	J-39354	RIVERTER, YOKE, HAND	1
32	PEFZZ	11083	1U7430	INSERTER, SEAL	1
33	PEFZZ	11083	1U7598	INSERTER, SEAL	1
				END OF FIGURE	

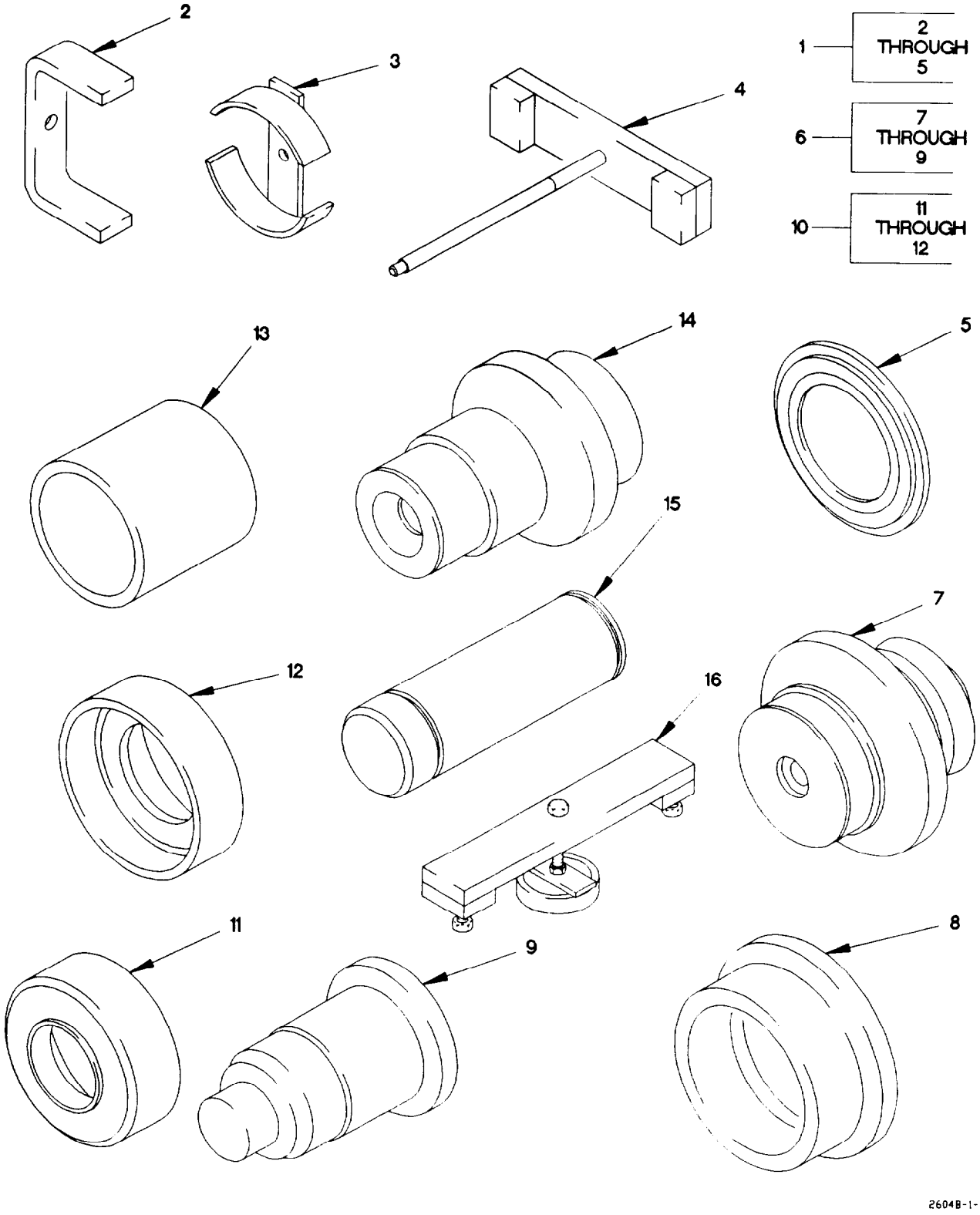

Figure 289. General Support Maintenance Special Tools (Sheet 1 of 4)

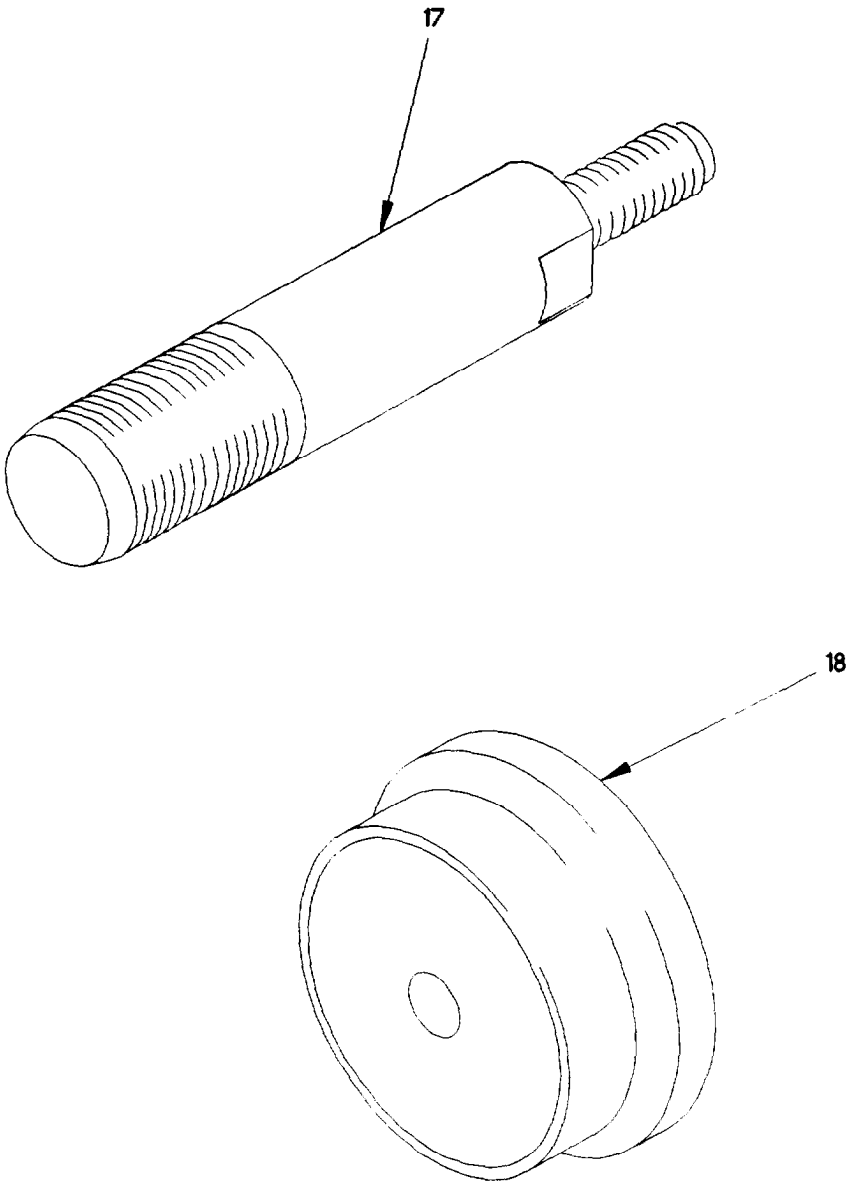

2604B-2-

Figure 289. General Support Maintenance Special Tools (Sheet 2 of 4)

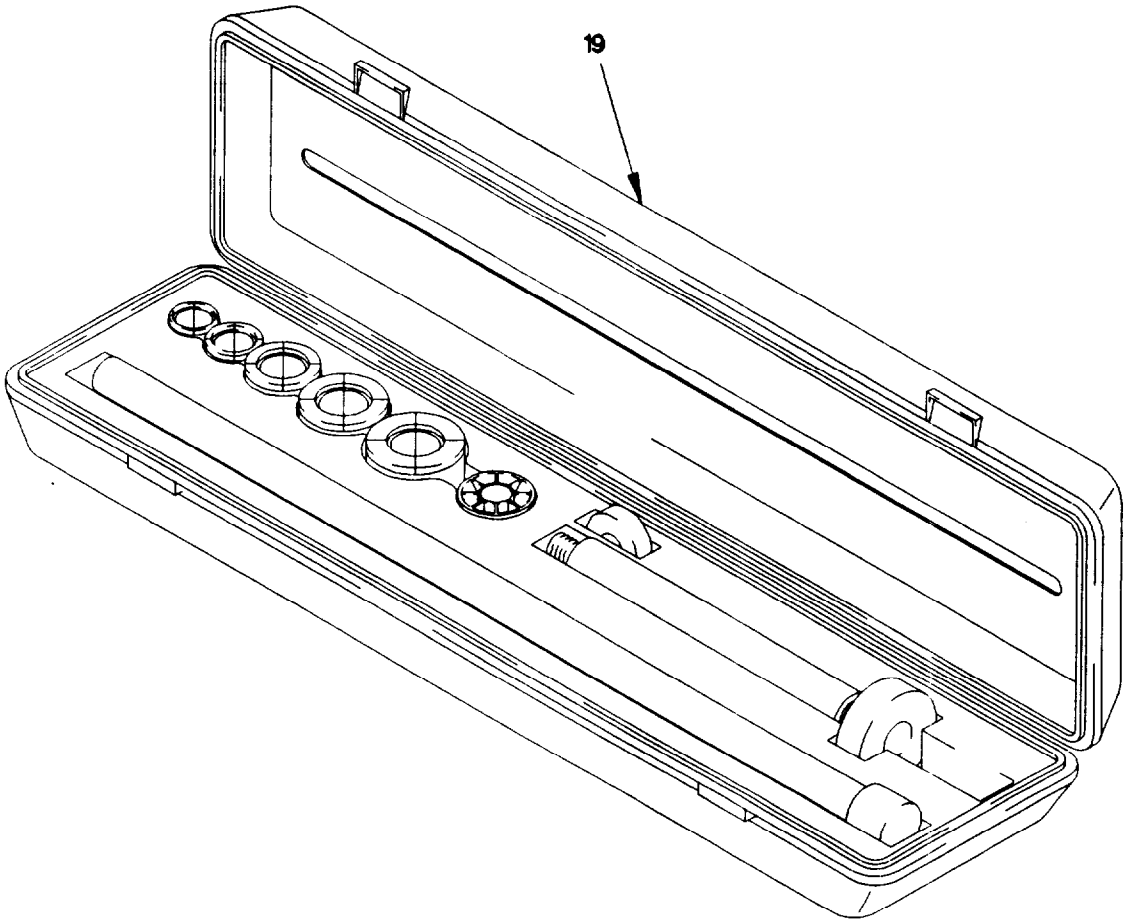

2604B-3-

Figure 289. General Support Maintenance Special Tools (Sheet 3 of 4)

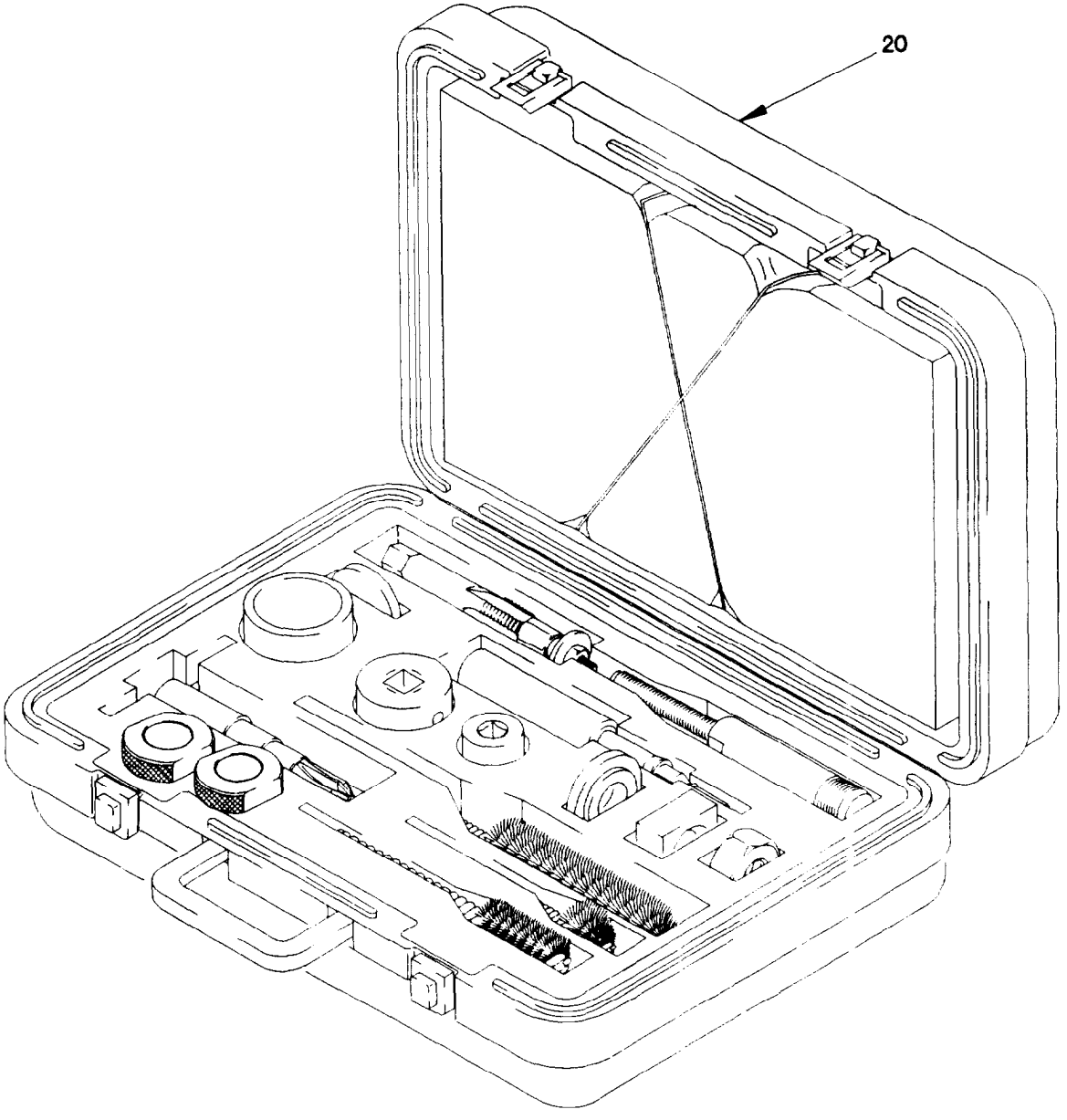

2604B-4-

Figure 289. General Support Maintenance Special Tools (Sheet 4 of 4)

(1) ITEM NO	(2) SMR CODE	(3) FSCM	(4) PART NUMBER	(5) DESCRIPTION AND USABLE ON CODE (UOC)	(6) QTY
				GROUP 2604: SPECIAL TOOLS FIG. 289 GENERAL SUPPORT MAINTENANCE SPECIAL TOOLS	
1	PEHZZ	33287	J35923	INSERTER AND REMOVE	1
2	PEHZZ	33287	J35923-1	.INSERTER AND REMOVE PISTON SPRING	1
3	PEHZZ	33287	J35923-2	.INSERTER AND REMOVE PISTON SPRING	1
4	PEHZZ	33287	J35923-4	.INSERTER AND REMOVE	1
5	PEHZZ	33287	J35923-3	.INSERTER AND REMOVE PISTON SPRING	1
6	PEHZZ	33287	J35922	BUSHING DRIVER SET	1
7	PEHZZ	33287	J 35922-2	.INSERTER, BEARING AN	1
8	PEHZZ	33287	J-35922-3	.INSERTER, SEAL	1
9	PEHZZ	33287	J 35922-1	.INSERTER, BEARING AN	1
10	PEHZZ	33287	J 38579	INSERTER, BEARING AN	1
11	PEHZZ	33287	J38579-2	.INSERTER, BEARING AN	1
12	PEHZZ	33287	J 38579-1	.INSERTER, BEARING AN	1
13	PEHZZ	33287	J-38565	BEARING, SLEEVE PTO BEARING/SLEEVE	1
14	PEHZZ	33287	J 38569	INSERTER, BEARING	1
15	PEHZZ	33287	J 35921-1	INSERTER, BEARING BEARING INSTALLER	1
16	PEHZZ	33287	J38573	INSERTER AND REMOVER INCLUDES J-38573-1 SUPPORT BAR ASSY, J-38573-2 SCREW ASSY & J-38573-3 SPRING	1
17	PEHZZ	33287	J8092	HANDLE, DRIVE	1
18	PEHZZ	33287	J 38568-3	INSERTER, BEARING AN	1
19	PEHZZ	11083	8S0602	DRIVER KIT, BEARING	1
20	PEHZZ	11083	4C4462	SLEEVE RPL, TOOL GP INJECTOR SLEEVE INSERTION TOOL	1

END OF FIGURE

Section IV. CROSS REFERENCE INDEX LIST

CROSS REFERENCE INDEXES

PART NUMBER INDEX

FSCM	PART NUMBER	STOCK NUMBER	FIGURE NO	ITEM NO
21969	A 13 DIN125-ST	5310-01-167-4064	46	48
		5310-01-167-4064	138	29
		5310-01-167-4064	140	6
		5310-01-167-4064	158	20
		5310-01-167-4064	188	25
		5310-01-167-4064	189	18
		5310-01-167-4064	252	2
		5310-01-167-4064	283	3
58536	A-A-1535 TY1	6210-00-727-6418	229	4
81348	A-A-50553-1-2-B-1-01-A		233	8
58536	A-A-52483	9905-00-999-7369	135	10
58536	A-A-55463-03	5935-01-323-6818	52	45
		5935-01-323-6818	53	55
58536	A-A-55463-05	5935-01-323-6814	266	59
58536	A-A-54464-05	5935-01-324-2350	266	57
58536	A-A-54464-07	5935-01-323-8568	52	35
		5935-01-323-8568	53	39
		5935-01-323-8568	104	4
78500	A-1205-D-2344	5330-01-360-5253	129	12
		5330-01-360-5253	129	57
78500	A-1205-F-2502	5330-01-432-2690	130	21
		5330-01-432-2690	132	21
78500	A-1205-R-2254	5330-01-360-5252	129	55
		5330-01-360-5252	131	42
78500	A-2247-E-1019	2530-01-389-0350	133	7
		2530-01-389-0350	134	11
78500	A-2297-V-5326	2530-01-271-7084	133	2
		2530-01-271-7084	134	2
55661	A-28		213	9
78500	A-3196-D-1070	4710-01-392-0326	129	43
		4710-01-392-0326	131	30
78500	A-3200-W-1869	2520-01-361-5204	130	3
		2520-01-361-5204	132	3
78500	A-3213-P-1758	3040-01-390-8212	129	56
78500	A-3226-A-1275	3130-01-392-3395	130	28
		3130-01-392-3395	132	28
78500	A-3280-Z-8190	2530-01-271-7006	133	14
		2530-01-271-7006	134	18
32171	A-3307-4		50	59
			50	62
78500	A-333-J-4118		129	40
			131	27
58536	AA50553-I-2-L-2-01-A		225	2
			225	27
	03-A			
			229	3
			225	29
	06-A			
80244	AA55592-16D	5340-01-416-5312	204	9
5A910	AC-19202	6220-01-375-3536	63	13

CROSS REFERENCE INDEXES

PART NUMBER INDEX

FSCM	PART NUMBER	STOCK NUMBER	FIGURE NO	ITEM NO
5A910	ACC-6134	6220-01-363-8877	59	2
98660	AC1000-8-8CAD	4730-00-809-9427	43	29
5A910	AC12901	6220-01-375-3530	63	7
0TE27	AD1698-8-84-8	4720-01-439-5078	26	46
84256	AKS7-428-165	5325-01-350-0114	233	15
84256	AKS7-832-130	5325-01-357-0699	231	18
78276	AKS7-832-80	5325-01-437-2388	226	6
84256	ALS3-470-2.0	5310-01-384-7280	50	28
		5310-01-384-7280	61	1
		5310-01-384-7280	78	1
84256	ALS3-470-3.3	5310-01-373-0748	50	53
		5310-01-373-0748	105	4
84256	ALS3-610-4.2	5310-01-381-9929	78	30
		5310-01-381-9929	153	2
		5310-01-381-9929	183	9
		5310-01-381-9929	283	17
07479	AMI5001	2510-01-375-3800	50	54
88044	AN116-18	4030-00-185-0487	165	5
		4030-00-185-0487	167	11
88044	AN5C26A	5306-00-182-1514	217	11
88044	AN742-52	5340-00-598-4151	263	9
88044	AN840-4	4730-00-287-1875	43	32
88044	AN849-4D	4730-00-639-9882	258	8
88044	AN914-2D	4730-00-230-8740	138	6
		4730-00-230-8740	139	23
88044	AN924-4J	5310-00-079-1967	258	9
88044	AN960C416L	5310-00-515-7449	218	8
		5310-00-515-7449	219	10
88044	AN970-6	5310-00-167-0768	267	5
70901	AP-1108-02	3120-01-395-1386	277	4
0TE27	AQ64-DOT-4-SIL		189	5
0TE27	AQ68-DOT-4X2SIL		189	39
			247	84
78225	AX-0465	5340-01-372-2469	258	14
78500	A1-2297U4597	2530-01-367-2382	133	18
		2530-01-367-2382	134	20
78500	A1-3102-U-2881	2530-01-363-4436	157	2
78500	A1-3222-V-2232		133	12
			134	14
30327	A110	4720-01-226-3714	BULK	1
78500	A1205Q2435	5330-01-360-7753	129	38
		5330-01-360-7753	131	25
78500	A1205U2257	5330-01-362-6102	130	23
		5330-01-362-6102	132	23
78500	A1227X1480	5330-01-362-6141	129	33
		5330-01-362-6141	131	20
51377	A1349S	5340-01-372-4887	254	16
51377	A1386H	4820-01-393-4532	3	27
		4820-01-393-4532	254	18
51377	A1390A	5340-01-440-1195	254	19
98624	A1393M	5340-01-393-0789	30	16
78500	A2-3200-W-1869	2520-01-361-5204	130	34

CROSS REFERENCE INDEXES

PART NUMBER INDEX

FSCM	PART NUMBER	STOCK NUMBER	FIGURE NO	ITEM NO
		2520-01-361-5204	132	34
78500	A2-3202-A-9621	2520-01-363-8153	129	8
81346	A269-55GRADETP304	4710-00-060-8269	BULK	2
78500	A3-3202-A-9621	2520-01-363-8152	129	9
78500	A3213-Q-1759	2530-01-391-3785	131	43
78500	A33260F1280	2520-01-362-5745	130	20
		2520-01-362-5745	132	20
78500	A3333J4118		129	23
29944	A34438	2540-01-360-7822	201	19
		2540-01-360-7822	202	18
		2540-01-360-7822	203	21
78500	A4333J4118		129	23
81343	A52426-1K	4720-01-124-0621	BULK	3
58536	A52432-3-L	2540-00-168-2187	242	1
58536	A52432-3-R	2540-00-168-2186	242	1
58536	A52463-2-03	6240-00-014-2454	63	11
58536	A52463-2-13	6240-00-617-0991	60	11
		6240-00-617-0991	63	10
		6240-00-617-0991	65	5
78500	A5333J4118		131	10
D8090	A6	5365-12-156-4709	260	64
		5365-12-156-4709	265	34
78500	A6333J4118		131	10
11976	A82777	5330-00-579-6495	16	5
		5330-00-579-6495	29	14
32171	B-3926-1		50	9
			50	12
			50	15
			50	18
			50	21
			50	24
18265	BAS02-0072	2815-01-298-5347	22	2
84256	BLDC6-10	5315-01-227-4226	249	3
1CJ86	BN28-M10X60	5305-01-382-1173	258	32
80204	B1821BH025C050N	5305-00-071-2506	252	13
		5305-00-071-2506	254	26
80204	B1821BH025C100N	5305-00-225-3843	266	50
80204	B1821BH025C125N	5305-00-068-0509	208	7
80204	B1821BH031C050N	5306-00-226-4822	277	25
80204	B1821BH031C250N	5306-00-226-4835	270	7
80204	B1821BH038C075D	5305-00-115-9526	63	2
		5305-00-115-9526	65	1
80204	B1821BH038C100N	5305-00-068-0510	248	7
80204	B1821BH038C125N	5305-00-068-0511	211	8
80204	B1821BH038C150N	5305-00-725-2317	211	7
80204	B1821BH038C225N	5305-00-638-8920	237	60
80204	B1821BH050C125N	5305-00-071-2067	255	14
		5305-00-071-2067	256	14
80204	B1821BH050C175N	5305-00-071-2071	255	23
		5305-00-071-2071	256	23
80204	B1821BH050C200N	5305-00-071-2071	252	3

CROSS REFERENCE INDEXES

PART NUMBER INDEX

FSCM	PART NUMBER	STOCK NUMBER	FIGURE NO	ITEM NO
		5305-00-071-2071	256	24
80204	B1821BH050C500N	5305-00-071-2083	255	20
		5305-00-071-2083	256	20
80204	B1821BH050F250N	5305-00-719-5240	172	8
80204	B1821BH063C350N	5305-00-724-7247	279	7
80204	B1821BH063F150N	5305-00-727-2283	155	31
80204	B18231B16030N	5305-01-418-1921	253	11
80204	B1831DH040016N	5305-01-384-3457	54	4
80204	B1834A08C014N	5305-01-K63-9355	249	19
80204	B1834B1205N	5305-01-439-0355	183	1
88907	B54-32780	4730-00-278-2523	34	10
		4730-00-278-2523	41	27
		4730-00-278-2523	258	10
		4730-00-278-2523	264	20
		4730-00-278-2523	268	18
14120	B5501-31689-120-150	2530-01-368-9501	160	3
14120	B5501-33364	4320-01-363-2294	252	1
82484	C-2145	2540-01-364-1621	241	16
		2540-01-364-1621	241	16
81484	C-2147	3040-01-375-1455	241	11
71468	CA121003-9	5340-01-367-9122	281	8
71468	CA121003-901	5340-01-375-3101	78	5
71468	CA121004-9	4730-01-374-0686	280	1
26952	CA1513-7322PID23	3040-01-372-4179	250	4
71468	CA3100E10SL-4S-B-2	5935-01-381-4161	79	5
71468	CA3108E16-10S-F80	5935-01-383-0583	52	49
		5935-01-383-0583	53	57
0MHJ9	C3350	5330-01-431-7575	196	15
		5330-01-431-7575	204	12
09455	CJM-1020		36	14
71744	CM7-7373	6240-00-270-6824	50	55
71744	CM7376	6240-00-499-6278	50	56
81349	CO-01HGF(1/6)052	6145-00-635-9459	BULK	5
0TE27	CPT3	5340-01-372-0376	147	3
		5340-01-372-0376	252	35
0TE27	CPT5	5340-01-442-8701	252	29
09990	CP104PX4879	4820-01-428-9695	249	33
78500	CSH5-24-38		128	4
			128	7
24346	CS22600-04	6680-01-438-6678	41	23
7Z588	CT 250L	4730-01-329-9151	28	6
		4730-01-329-9151	257	14
7Z588	CT 350L	4730-01-329-9147	28	3
7Z588	CT-300L	4730-01-207-5985	28	17
09990	CV101PX4879	4720-01-428-6849	249	35
15434	C0718103500	5305-01-273-6251	158	22
		5305-01-273-6251	202	8
		5305-01-273-6251	203	3
		5305-01-273-6251	245	9

CROSS REFERENCE INDEXES

PART NUMBER INDEX

FSCM	PART NUMBER	STOCK NUMBER	FIGURE NO	ITEM NO
		5305-01-273-6251	258	16
06721	C11472J		285	20
75160	C16054	4730-00-908-6294	26	23
		4730-00-908-6294	26	25
78500	C23201Q7895	3040-01-363-2386	129	10
09332	C5-20R	5315-01-224-1537	279	5
13174	C608-100BLK	4720-01-003-6706	BULK	6
09332	C7-15-R	5315-01-395-0142	166	9
09332	C7-20-R	5315-01-395-0140	166	7
78500	C73201Z7800		131	9
62380	DBW2020.40	2990-01-381-8678	260	1
15526	DIN 934 ST M6	5310-01-342-2739	3	13
		5310-01-342-2739	42	5
		5310-01-342-2739	43	21
		5310-01-342-2739	48	4
		5310-01-342-2739	69	17
		5310-01-342-2739	69	42
		5310-01-342-2739	70	9
		5310-01-342-2739	73	3
		5310-01-342-2739	77	3
		5310-01-342-2739	102	2
		5310-01-342-2739	148	4
		5310-01-342-2739	158	14
		5310-01-342-2739	190	6
		5310-01-342-2739	241	7
D8286	DIN128A-8FST	5310-12-162-2131	26	30
15526	DIN43650AF2	6150-01-K64-0407	83	8
1FH08	DIN555M8	5310-01-160-2032	26	31
		5310-01-160-2032	37	3
		5310-01-160-2032	46	51
		5310-01-160-2032	58	2
		5310-01-160-2032	149	22
		5310-01-160-2032	185	12
		5310-01-160-2032	207	2
		5310-01-160-2032	247	11
		5310-01-160-2032	252	10
		5310-01-160-2032	258	30
D8286	DIN9021-5,3-100H V-C-B3B	5310-12-196-5989	52	101
		5310-12-196-5989	78	3
		5310-12-196-5989	182	3
		5310-12-196-5989	185	22
		5310-12-196-5989	186	2
		5310-12-196-5989	187	2
		5310-12-196-5989	272	11
15526	DIN931-M12X10.9-A4C	5305-01-268-9099	119	16
15526	DIN933-M10X20-8.8-A4C	5306-01-264-6360	3	15
		5306-01-264-6360	257	22
21969	DIN933-M10X25-8.8-B3B	5306-01-338-3981	113	15

CROSS REFERENCE INDEXES

PART NUMBER INDEX

FSCM	PART NUMBER	STOCK NUMBER	FIGURE NO	ITEM NO
		5306-01-338-3981	117	17
15526	DIN933-M10X35-8.8-A4C	5305-01-274-1264	38	4
		5305-01-274-1264	172	36
		5305-01-274-1264	189	45
		5305-01-274-1264	285	12
15226	DIN933-M6X16-8.8-A4C	5305-01-268-3656	26	48
		5305-01-268-3656	36	7
		5305-01-268-3656	36	22
		5305-01-268-3656	57	4
		5305-01-268-3656	78	16
		5305-01-268-3656	106	3
		5305-01-268-3656	153	6
		5305-01-268-3656	158	16
		5305-01-268-3656	182	29
		5305-01-268-3656	202	7
		5305-01-268-3656	205	19
		5305-01-268-3656	241	3
		5305-01-268-3656	245	5
		5305-01-268-3656	258	6
		5305-01-268-3656	272	30
0H7H2	DJN439012	5310-01-364-4818	272	7
09990	DM104LD1X4879	4820-01-443-6578	249	27
09990	DM104LN8X4879	4820-01-417-9117	249	29
0TE27	DPL4	4730-01-394-4791	139	16
06721	DQ-6025	4730-01-417-3197	KITS	
09332	D16-30R	5315-01-367-6426	279	14
09332	D16-45R	5315-01-367-6425	274	5
81349	D63474/1-27	5310-01-416-4339	188	34
81349	D63474/1-30	5310-01-413-8475	250	8
81349	D63546/8-06G	5310-01-391-7887	173	19
		5310-01-391-7887	175	5
81349	D70329/1-A040	5310-01-407-4748	188	11
81349	D70336/1-20	5310-01-110-7933	67	3
81349	D70336/3-50	5310-01-439-2542	272	9
81349	D70336/3-52	5310-01-439-2543	272	6
09332	D8-50R-303	5315-01-406-9152	210	10
82484	E-003-17		50	41
82484	E-003-19		257	56
82484	E-003-20		50	33
82484	E-003-21		50	49
82484	E-003-22		50	37
82484	E-003-23		50	29
82484	E-003-24		51	19
82484	E-003-25		51	11
82484	E-003-027		51	7
82484	E-003-028		257	51
82484	E-003-035		51	15
82484	E-003-036	6220-01-376-3676	54	1
82484	E-003-055		50	45
82484	E-003-086	2540-01-361-5201	241	1

CROSS REFERENCE INDEXES

PART NUMBER INDEX

FSCM	PART NUMBER	STOCK NUMBER	FIGURE NO	ITEM NO
82484	E-013-001	6210-01-345-6315	50	30
		6210-01-345-6315	50	46
		6210-01-345-6315	51	14
		6210-01-345-6315	51	18
		6210-01-345-6315	51	22
		6210-01-345-6315	257	57
82484	E-013-002	6220-01-355-0001	50	34
		6220-01-355-0001	50	38
		6220-01-355-0001	50	42
		6220-01-355-0001	50	50
		6220-01-355-0001	51	10
		6220-01-355-0001	257	54
0AOE9	ECU-PMTA		231	11
18265	EEH00-2226	2990-01-363-2470	39	7
32171	EM7175-11SS	6680-01-443-3284	50	14
32171	EM7175-12	6680-01-439-2380	50	58
32171	EM7175-3	6620-01-376-1613	50	11
32171	EM7175-4	6620-01-374-9934	50	23
32171	EM7175-6SS		50	8
32171	EM7175-8	6680-01-365-8024	50	61
32171	EM7175-9	6680-01-382-8299	50	58
7V059	EPS-300 3/4 BLAC K	5970-01-379-7195	91	3
		5970-01-379-7195	92	3
		5970-01-379-7195	93	3
		5970-01-379-7195	94	3
		5970-01-379-7195	95	3
		5970-01-379-7195	96	3
		5970-01-379-7195	97	3
		5970-01-379-7195	98	3
		5970-01-379-7195	99	3
		5970-01-379-7195	100	3
01943	EXP25357	5340-01-381-3996	264	6
01943	EXP25358	5340-01-381-3770	264	5
01943	EXP25359	5340-01-383-9581	21	13
01943	EXP25360	5340-01-384-0867	124	1
78500	E403276P-16	2530-01-361-3966	133	3
01276	FF9311-36	4730-00-909-8627	26	37
16632	FLX5500-0010	4720-01-370-1306	43	38
16632	FLX5500-0011	4720-01-370-2818	43	26
16632	FLX5500-0013	4720-01-370-2821	41	30
16632	FLX5500-0015	4720-01-370-2820	41	29
16632	FLX550002028800	4720-01-370-2819	41	28
16632	FLX550012001200	4720-01-363-2253	43	14
7S918	F002	4010-01-386-8180	237	4
7S918	F007	4010-01-423-0892	172	39
81349	F02A32V25A	5920-01-273-5455	88	12
29944	F08568	2540-01-364-4623	202	16
29944	F08569	2540-01-364-4622	203	14
29944	F10852	2540-01-423-2336	201	13
08108	F40CW	6240-00-152-2987	229	6
0TE27	F4001-16		124	12

CROSS REFERENCE INDEXES

PART NUMBER INDEX

FSCM	PART NUMBER	STOCK NUMBER	FIGURE NO	ITEM NO
			124	24
75535	G-209-1018570		212	2
82484	GS-3909	2540-01-412-3853	241	2
18265	GSH001725	2940-01-417-2755	26	1
66842	G3042MB3200CU		232	1
71400	HFB	5920-01-292-6688	88	11
78500	HM813810	3110-00-606-9577	130	30
		3110-00-606-9577	132	30
78500	HM813844	3110-01-022-8163	130	31
		3110-01-022-8163	132	31
26952	HP5003-4204	4320-01-432-0321	248	1
56501	H0221	5975-00-894-9234	225	26
		5975-00-894-9234	229	1
71041	H1086RH	3020-01-294-8805	277	5
30780	H5EP		266	38
33287	J 35921-1	5120-01-389-0658	289	15
33287	J 35922-1	5120-01-389-1220	289	9
33287	J 35922-2	5120-01-389-1223	289	7
33287	J 38568-3	5120-01-390-1105	289	18
33287	J 38569	5120-01-390-1104	289	14
33287	J 38579	5120-01-391-5133	289	10
33287	J 38579-1	5120-01-391-6913	289	12
33287	J-35922-3	5120-01-K61-9491	289	8
33287	J-38548-1	5220-01-388-1460	287	30
33287	J-38565		289	13
33287	J-39354	5120-01-415-3558	288	31
0TE27	JM0412		268	30
60038	JM716610	3110-00-144-9455	129	53
		3110-00-144-9455	131	40
60038	JM716649	3110-00-144-9793	129	54
		3110-00-144-9793	131	41
33287	J35922	5120-01-391-3541	289	6
33287	J35923	5120-01-388-4436	289	1
33287	J35923-1	5120-01-388-4439	289	2
33287	J35923-2	5120-01-388-5623	289	3
33287	J35923-3	5120-01-388-5621	289	5
33287	J35923-4	5120-01-388-5617	289	4
33287	J38566	5120-01-414-7398	288	29
33287	J38573	5120-01-388-3660	289	16
33287	J38579-2	5120-01-391-5350	289	11
81343	J515-16-3		124	13
			124	23
81343	J515-4-1	5330-01-387-9490	126	5
		5330-01-387-9490	154	9
33287	J8092	5120-00-677-2259	289	17
81343	J844TYBSIZE 3/8 BLACK	4720-01-014-4915	BULK	7
78500	K-2412-Z	5315-01-179-9882	157	4
30327	KF08-04PS	4730-00-913-0766	41	25
78500	KIT4710	2520-01-390-8083	KITS	
		2520-01-390-8083	KITS	
06721	KN-20900	5355-01-372-8692	150	4

CROSS REFERENCE INDEXES

PART NUMBER INDEX

FSCM	PART NUMBER	STOCK NUMBER	FIGURE NO	ITEM NO
06721	KN-20901	5355-01-372-8693	150	3
78500	KT-16SB	2520-01-370-1360	KITS	
94222	K4-2338-12	5340-01-433-7299	182	12
S7622	K9639	5330-01-434-2867	194	2
26952	LH50000105	2540-01-374-1764	189	43
08928	LK-6162032S3.021	5355-01-443-8112	270	36
0TE27	LNU4222/127	4730-01-410-8063	139	15
78280	LP-3239-120	4720-01-086-8667	BULK	8
78280	LP-3239-152.4		35	13
78280	LP-3239-914.5		35	11
78280	LP-535	2910-00-646-9727	35	4
78280	LP1698CT	4730-01-412-5193	35	9
84256	LT1504-C10-16		249	1
84256	LT1504C6-16	4010-00-188-1643	189	30
		4010-00-188-1643	221	11
24825	M-01 383	2510-01-376-5661	198	9
71400	MGB1-4	5920-00-836-2517	69	58
81349	MIL-A-52767D		267	2
81349	MIL-F-21840	8315-00-006-9835	BULK	9
81348	MIL-R-3990 CL5-1 IN	5365-01-438-2640	271	8
		5365-01-438-2640	271	15
81349	MIL-W-70342/4	5310-01-372-5685	7	10
		5310-01-372-5685	188	8
		5310-01-372-5685	189	12
70628	MILH8796	4720-00-913-1937	BULK	10
27797	MM6465		203	13
27797	MM6511		202	15
27797	MM6513		203	7
27797	MM6515		201	7
27797	MM6538		201	8
27797	MM6542L		201	6
			203	6
27797	MM6542R		202	10
27797	MM6558L		202	13
27797	MM6558R		201	8
			203	8
27797	MM6564		201	11
27797	MM6566		201	6
27797	MM6686L		201	8
			203	8
27797	MM6686R		202	13
78500	MN308		133	22
			134	26
78500	MPS-4285	2530-01-361-2346	KITS	
		2530-01-361-2346	KITS	
78500	MPS4012	2530-01-391-3228	KITS	
		2530-01-391-3228	KITS	
12195	MSPN32764	2610-01-356-9098	156	1
96906	MS14314-2X	4730-00-011-2578	141	3
96906	MS14314-3X	4730-00-011-2304	149	12
96906	MS14315-4	4730-00-817-6578	268	5

CROSS REFERENCE INDEXES

PART NUMBER INDEX

FSCM	PART NUMBER	STOCK NUMBER	FIGURE NO	ITEM NO
96906	MS15002-1	4730-00-172-0010	279	12
96906	MS15003-1	4730-00-050-4208	173	11
		4730-00-050-4208	175	10
		4730-00-050-4208	238	20
96906	MS15003-3	4730-00-172-0025	238	21
96906	MS15003-4	4730-00-172-0028	171	2
96906	MS15003-6	4730-00-172-0034	173	5
96906	MS15796-803	5310-00-595-6211	225	18
		5310-00-595-6211	227	10
96906	MS15795-807	5310-00-880-5978	226	5
		5310-00-880-5978	227	12
		5310-00-880-5978	231	12
96906	MS15795-808	5310-00-619-1148	213	3
		5310-00-619-1148	227	6
96906	MS15795-809	5310-00-550-5054	266	8
96906	MS15795-810	5310-00-582-5677	218	31
		5310-00-582-5677	233	14
		5310-00-582-5677	234	17
		5310-00-582-5677	266	51
96906	MS15795-811	5310-00-880-5977	215	22
96906	MS15795-812	5310-00-625-5756	217	14
		5310-00-625-5756	218	23
		5310-00-625-5756	219	30
		5310-00-625-5756	220	12
96906	MS15795-813	5310-00-802-4701	69	29
96906	MS15795-814	5310-00-773-7618	211	4
		5310-00-773-7618	234	5
96906	MS15795-815	5310-00-595-6057	215	15
96906	MS15795-820	5310-00-614-3505	218	13
		5310-00-614-3505	219	15
		5310-00-614-3505	220	5
96906	MS15795-847	5310-00-763-3413	52	55
		5310-00-763-3413	53	68
		5310-00-763-3413	78	20
		5310-00-763-3413	220	18
		5310-00-763-3413	233	4
96906	MS15795-852	5310-01-304-8733	221	3
96906	MS15795-908	5310-00-045-5207	58	16
96906	MS15795-913	5310-00-045-5213	69	7
96906	MS16228-10C	5310-00-245-8826	218	12
		5310-00-245-8826	219	14
		5310-00-245-8826	220	6
96906	MS16228-5C	5310-00-241-6638	218	27
		5310-00-241-6638	219	31
		5310-00-241-6638	220	23
96906	MS16561-142	5315-00-058-6115	238	14
96906	MS16562-146	5315-00-853-3814	238	9
96906	MS16562-162	5315-00-051-6613	172	31
96906	MS16562-238	5315-00-753-3894	219	20
96906	MS16562-240	5315-00-200-3183	219	21
96906	MS16562-256	5315-00-753-3895	169	8
		5315-00-753-3895	170	2

CROSS REFERENCE INDEXES

PART NUMBER INDEX

FSCM	PART NUMBER	STOCK NUMBER	FIGURE NO	ITEM NO
96906	MS16562-50	5315-00-814-3531	237	71
96906	MS16624-1087	5365-00-804-2025	277	1
96906	MS16633-1031	5325-00-682-1762	31	2
96906	MS16995-81	5305-00-992-6147	211	5
96906	MS16996-10	5305-00-052-6456	45	26
96906	MS16997-60	5305-00-983-8084	216	2
96906	MS16997-62	5305-00-978-9385	216	10
96906	MS16997-99	5305-00-978-9394	154	7
		5305-00-978-9394	160	6
96906	MS16998-61L	5305-01-211-3097	45	6
96906	MS171658	5315-01-305-7675	218	34
96906	MS171659	5315-00-846-8337	218	10
		5315-00-846-8337	219	13
96906	MS171661	5315-01-283-0544	218	16
96906	MS17984C735	5315-01-416-7214	253	20
96906	MS17987C422	5315-00-182-9723	216	12
96906	MS20392-3C45	5315-00-811-9107	218	6
		5315-00-811-9107	219	7
96906	MS20392-4P25		149	23
96906	MS20500-524	5310-00-208-4023	38	11
		5310-00-208-4023	39	10
96906	MS20659-104	5940-00-107-1481	71	18
		5940-00-107-1481	80	4
		5940-00-107-1481	82	7
		5940-00-107-1481	84	8
		5940-00-107-1481	85	16
		5940-00-107-1481	86	24
		5940-00-107-1481	101	5
		5940-00-107-1481	259	20
96906	MS20659-105	5940-00-114-1300	71	17
		5940-00-114-1300	80	6
		5940-00-114-1300	84	7
		5940-00-114-1300	86	10
96906	MS20659-106	5940-00-113-9819	83	7
		5940-00-113-9819	84	17
		5940-00-113-9819	85	10
		5940-00-113-9819	86	19
		5940-00-113-9819	87	10
		5940-00-113-9819	88	15
96906	MS20659-111	5940-00-115-2678	96	2
96906	MS20659-112	5940-00-115-4995	94	2
		5940-00-115-4995	95	2
96906	MS20659-118	5940-00-115-2684	92	2
		5940-00-115-2684	93	6
		5940-00-115-2684	99	2
		5940-00-115-2684	100	2
96906	MS20659-120	5940-00-115-5004	91	6
		5940-00-115-5004	97	2
		5940-00-115-5004	98	2
96906	MS20659-127	5940-00-113-3147	76	7
		5940-00-113-3147	84	10
		5940-00-113-3147	85	7

CROSS REFERENCE INDEXES

PART NUMBER INDEX

FSCM	PART NUMBER	STOCK NUMBER	FIGURE NO	ITEM NO
		5940-00-113-3147	86	13
96906	MS20659-128	5940-00-113-9820	84	9
		5940-00-113-9820	82	8
		5940-00-113-9820	86	11
		5940-00-113-9820	87	9
		5940-00-113-9820	88	16
96906	MS20659-132	5940-00-115-2679	94	6
		5940-00-115-2679	95	6
		5940-00-115-2679	96	6
96906	MS20659-136	5940-00-115-2686	91	2
		5940-00-115-2686	97	6
96906	MS20659-144	5940-00-115-2677	262	5
96906	MS20659-151	5940-00-115-2683	93	2
96906	MS20659-163	5940-00-113-3145	71	19
		5940-00-113-3145	84	11
		5940-00-113-3145	86	12
96906	MS20659-164	5940-00-113-3148	86	23
96906	MS20659-166	5940-00-113-9821	86	22
78500	MS208020		133	20
			134	24
96906	MS20913-6S	4730-00-221-2140	255	21
		4730-00-221-2140	256	21
78500	MS210035-2-A	5305-01-390-8483	130	26
		5305-01-390-8483	132	26
96906	MS21042-04	5310-00-811-6419	270	29
96906	MS21042-5	5310-00-807-1469	217	15
96906	MS21044-N4	5310-00-877-5796	242	2
96906	MS21044C08	5310-00-982-6814	227	11
96906	MS21044C4	5310-00-889-2589	266	17
96906	MS21045L5	5310-00-857-5559	124	20
96906	MS21046C5	5310-00-059-9266	41	19
96906	MS21083N08	5310-00-941-6019	50	10
		5310-00-941-6019	50	13
		5310-00-941-6019	50	16
		5310-00-941-6019	50	19
		5310-00-941-6019	50	22
		5310-00-941-6019	50	25
		5310-00-941-6019	50	60
		5310-00-941-6019	50	63
		5310-00-941-6019	210	3
96906	MS21083N6	5310-00-926-1852	257	6
78500	MS212035-2-A	5305-01-390-8482	130	1
		5305-01-390-8482	130	18
		5305-01-390-8482	132	1
		5305-01-390-8482	132	18
78500	MS212080-2	5306-01-380-9991	130	7
		5306-01-380-9991	132	7
96906	MS21266-2N	5325-00-074-3301	30	8
		5325-00-074-3301	51	3
		5325-00-074-3301	78	7
		5325-00-074-3301	257	47
		5325-00-074-3301	272	2

CROSS REFERENCE INDEXES

PART NUMBER INDEX

FSCM	PART NUMBER	STOCK NUMBER	FIGURE NO	ITEM NO
96906	MS21266-3N	5325-00-926-1394	78	35
96906	MS21266-4N	5325-00-923-9512	42	9
		5325-00-923-9512	249	10
96906	MS21266-5N	5325-00-783-4754	249	12
		5325-00-783-4754	250	9
96906	MS21314-18	5340-00-190-6812	263	2
96906	MS21318-48	5305-00-253-5627	255	5
		5305-00-253-5627	256	5
96906	MS21333-107	5340-00-809-1500	3	12
		5340-00-809-1500	70	8
96906	MS21333-125	5340-00-725-5280	70	1
96906	MS21919WCH10	5340-01-140-6429	266	29
96906	MS24520-11	4730-01-383-5276	258	26
96906	MS24523-30	5930-00-683-1626	270	30
96906	MS24524-22	5930-00-655-4247	231	2
96906	MS24524-23	5930-00-655-4241	231	20
96906	MS24625-47	5305-01-296-2849	219	23
		5305-01-296-2849	225	36
		5305-01-296-2849	229	7
96906	MS24627-37	5305-00-052-6867	209	2
96906	MS24630-36	5305-00-052-9051	219	41
		5305-00-052-9051	222	12
		5305-00-052-9051	223	10
96906	MS24665-151	5315-00-815-1405	36	31
96906	MS24665-300	5315-00-234-1863	209	5
	MS24665-385	5315-00-187-9382	188	42
		5315-00-187-9382	253	15
		5315-00-187-9382	283	21
96906	MS24665-423	5315-00-013-7228	159	10
96906	MS24665-457	5315-00-187-9393	188	6
96906	MS24665-459	5315-00-187-9394	250	7
		5315-00-187-9394	251	3
96906	MS24665-69	5315-00-828-8190	205	8
96906	MS24671-76	5305-00-990-8350	69	38
96906	MS24693-C143	5305-01-302-2424	215	4
96906	MS24693-C144	5305-00-613-7439	215	12
96906	MS24693-144		224	3
96906	MS25010A11	6210-00-299-6656	259	22
96906	MS25036-107	5940-00-113-8179	52	16
		5940-00-113-8179	53	16
96906	MS25036-108	5940-00-143-4780	52	21
		5940-00-143-4780	53	25
		5940-00-143-4780	72	10
96906	MS25036-109	5940-00-283-5281	52	85
		5940-00-283-5281	53	100
96906	MS25036-112	5940-00-143-4794	52	36
		5940-00-143-4794	53	40
96906	MS25036-113	5940-00-113-8183	52	84
		5940-00-113-8183	53	99
96906	MS25036-122	5940-00-113-8190	281	18
96906	MS25036-147	5940-00-557-1630	72	9
96906	MS25036-150	5940-00-113-8184	53	50

CROSS REFERENCE INDEXES

PART NUMBER INDEX

FSCM	PART NUMBER	STOCK NUMBER	FIGURE NO	ITEM NO
96906	MS25036-154	5940-00-230-0515	71	20
96906	MS25036-155	5940-00-660-3633	272	34
96906	MS25036-157	5940-00-143-4777	52	82
		5940-00-143-4777	53	97
96906	MS25043-14DA	5935-01-181-6651	225	21
96906	MS25043-18DA	5935-01-175-8419	225	16
96906	MS25043-22DA	5935-01-176-1708	235	12
96906	MS25082-21	5310-00-616-2973	231	3
96906	MS25223-2	5930-00-615-7952	231	6
96906	MS25224-3	5930-00-617-9718	270	35
96906	MS25226-4-2	6150-00-557-7653	259	21
96906	MS25226-4-3	6150-00-557-7656	259	9
96906	MS25237-387R	6240-01-074-4600	259	23
96906	MS25281F4	5340-00-943-6041	69	57
96906	MS25440-4	5310-00-841-2576	31	21
96906	MS27130-S148	5310-01-370-5548	224	1
96906	MS27130-S34	5310-01-108-8404	221	5
96906	MS27130-S56	5310-01-065-4786	270	34
96906	MS27130S135	5310-00-177-0994	217	10
		5310-00-177-0994	221	6
96906	MS27142-3	5935-00-115-2306	52	41
		5935-00-115-2306	53	51
		5935-00-115-2306	85	9
96906	MS27144-2	5935-00-115-2307	71	15
		5935-00-115-2307	79	2
		5935-00-115-2307	80	5
		5935-00-115-2307	82	6
		5935-00-115-2307	84	6
		5935-00-115-2307	85	6
		5935-00-115-2307	101	4
		5935-00-115-2307	266	67
96906	MS27148-2	5999-00-057-2929	60	7
		5999-00-057-2929	65	14
96906	MS27183-10	5310-00-809-4058	158	15
		5310-00-809-4058	205	16
		5310-00-809-4058	213	19
		5310-00-809-4058	225	43
		5310-00-809-4058	242	3
		5310-00-809-4058	263	15
96906	MS27183-12	5310-00-081-4219	214	3
		5310-00-081-4219	277	26
		5310-00-081-4219	278	5
		5310-00-081-4219	278	5
96906	MS27183-14	5310-00-080-6004	272	23
96906	MS27183-18	5310-00-809-5998	134	6
		5310-00-809-5998	255	18
96906	MS27183-20	5310-00-068-5285	279	6
96906	MS27183-41	5310-00-765-3197	281	20
96906	MS27183-42	5310-00-014-5850	234	11
		5310-00-014-5850	235	5
		5310-00-014-5850	235	5
96906	MS27183-48	5310-01-308-8205	256	29

CROSS REFERENCE INDEXES

PART NUMBER INDEX

FSCM	PART NUMBER	STOCK NUMBER	FIGURE NO	ITEM NO
96906	MS27183-52	5310-01-274-3255	52	65
		5310-01-274-3255	53	79
		5310-01-274-3255	209	7
96906	MS27183-55	5310-01-312-4960	270	19
96906	MS27183-8	5310-00-809-8546	277	14
96906	MS27212-2-16	5940-00-950-7784	259	18
96906	MS27488-16	5935-00-235-8970	75	5
96906	MS27769C5	4730-00-188-3507	254	20
96906	MS28778-10	5330-00-285-9842	252	17
		5330-00-285-9842	252	21
		5330-00-285-9842	252	25
96906	MS28778-12	5330-00-251-8839	252	5
96906	MS28778-16	5330-00-804-5694	160	2
96906	MS28778-20	5330-00-816-3546	252	8
		5330-00-816-3546	252	39
		5330-00-816-3546	252	41
96906	MS28778-4	5330-00-805-2966	247	8
		5330-00-805-2966	248	3
		5330-00-805-2966	248	9
		5330-00-805-2966	248	11
		5330-00-805-2966	249	23
		5330-00-805-2966	249	42
		5330-00-805-2966	251	6
		5330-00-805-2966	251	12
		5330-00-805-2966	253	2
96906	MS28778-6	5330-00-804-5695	29	34
		5330-00-804-5695	239	4
96906	MS28778-8	5330-00-808-0794	30	24
		5330-00-808-0794	43	23
		5330-00-808-0794	252	33
96906	MS29513-115	5330-00-248-3847	218	36
96906	MS3102R18-10S	5935-00-828-6550	225	19
96906	MS3102R18-11SC	5935-00-842-6316	225	15
96906	MS3102R22-23P	5935-00-725-0887	235	14
96906	MS3106E18-10P	5935-00-683-1229	266	63
96906	MS3106F14S-7S	5935-00-192-6336	266	55
96906	MS3106F18-11S	5935-00-233-3990	267	10
96906	MS3106R18-11P	5935-00-879-3265	267	8
96906	MS310614S9P	5935-00-581-1080	266	65
96906	MS3108E18-10S	5935-00-878-5562	266	61
96906	MS3108R14S7P	5935-00-849-3867	266	53
96906	MS3181-14N	5935-00-990-5580	86	7
96906	MS3217-1137	5365-00-174-8678	239	32
		5365-00-174-8678	239	39
96906	MS3367-1-0	5975-00-984-6582	258	36
96906	MS3367-2-0	5975-00-899-4606	258	23
96906	MS3452W14S-7P	5935-01-092-1049	225	20
96906	MS3474E20-16S	5935-01-111-6748	259	17
96906	MS3474W14-5S	5935-01-111-6744	86	6
96906	MS3474W16-8S	5935-01-111-4580	261	2
96906	MS3476W20-16P	5935-01-109-7518	261	5
96906	MS35190-253	5305-00-059-4568	166	5

CROSS REFERENCE INDEXES

PART NUMBER INDEX

FSCM	PART NUMBER	STOCK NUMBER	FIGURE NO	ITEM NO
96906	MS35206-217	5305-00-889-2999	270	32
96906	MS35206-218	5305-00-983-6730	235	13
96906	MS35206-230	5305-00-889-3000	78	18
		5305-00-889-3000	281	7
96906	MS35206-233	5305-00-984-4993	61	6
		5305-00-984-4993	62	5
96906	MS35206-243	5305-00-984-6191	47	13
96906	MS35206-244	5305-00-984-6192	69	21
96906	MS35206-245	5305-00-984-6193	210	6
96906	MS35206-261	5305-00-984-6208	61	8
		5305-00-984-6208	62	7
		5305-00-984-6208	230	2
96906	MS35206-263	5305-00-984-6210	60	14
		5305-00-984-6210	65	12
96906	MS35206-265	5305-00-984-6212	277	12
96906	MS35206-320	5305-00-151-5795	281	3
96906	MS35207-264	5305-00-989-7435	234	9
96906	MS35207-265	5305-00-993-1848	233	7
96906	MS35215-53	5305-00-206-2508	58	14
96906	MS35215-60	5305-00-954-8153	30	14
96906	MS35266-79	5305-00-514-8005	263	14
96906	MS35307-303	5305-00-719-3997	52	64
		5305-00-719-3997	53	78
		5305-00-719-3997	266	9
96906	MS35307-305	5305-00-021-3616	233	16
96906	MS35307-306	5305-00-702-4523	266	36
96906	MS35307-308	5305-00-207-8253	52	83
		5305-00-207-8253	53	98
		5305-00-207-8253	217	6
		5305-00-207-8253	221	1
96906	MS35307-334	5306-00-543-4405	52	87
		5306-00-543-4405	53	102
96906	MS35307-335	5306-00-720-8260	218	22
		5306-00-720-8260	219	29
		5306-00-720-8260	220	11
96906	MS35307-337	5306-00-576-0529	214	1
96906	MS35307-344	5306-00-720-8258	218	29
		5306-00-720-8258	219	5
		5306-00-720-8258	220	21
96906	MS35307-345	5306-00-720-8259	218	28
		5306-00-720-8259	219	4
		5306-00-720-8259	220	22
96906	MS35307-362	5305-00-717-5467	215	13
96906	MS35308-308	5305-00-207-8253	233	12
		5305-00-207-8253	266	16
96906	MS35333-121	5310-00-905-5454	231	5
96906	MS35333-78	5310-00-261-7156	259	4
96906	MS35335-30	5310-00-209-0788	52	61
		5310-00-209-0788	53	75
		5310-00-209-0788	78	19
96906	MS35335-31	5310-00-596-7693	269	8
96906	MS35335-38	5310-00-616-6354	78	10

CROSS REFERENCE INDEXES

PART NUMBER INDEX

FSCM	PART NUMBER	STOCK NUMBER	FIGURE NO	ITEM NO
		5310-00-616-6354	102	10
96906	MS35335-58	5310-00-209-1366	61	5
		5310-00-209-1366	62	4
96906	MS35335-61	5310-00-527-3634	52	69
		5310-00-527-3634	53	82
		5310-00-527-3634	78	14
96906	MS35335-62	5310-00-184-9562	52	86
		5310-00-184-9562	53	101
96906	MS35338-100	5310-00-261-8278	58	15
96906	MS35338-103	5310-00-184-8971	58	12
		5310-00-184-8971	69	8
96906	MS35338-135	5310-00-933-8118	225	14
		5310-00-933-8118	227	2
		5310-00-933-8118	235	10
96906	MS35338-137	5310-00-933-8119	52	56
		5310-00-933-8119	53	69
		5310-00-933-8119	78	21
		5310-00-933-8119	215	10
		5310-00-933-8119	226	4
		5310-00-933-8119	231	13
96906	MS35338-138	5310-00-933-8120	213	2
		5310-00-933-8120	217	4
		5310-00-933-8120	220	17
		5310-00-933-8120	227	7
		5310-00-933-8120	230	6
		5310-00-933-8120	233	3
		5310-00-933-8120	234	10
		5310-00-933-8120	235	6
		5310-00-933-8120	235	6
		5310-00-933-8120	259	16
		5310-00-933-8120	266	32
96906	MS35338-139	5310-00-933-8121	216	9
		5310-00-933-8121	232	14
		5310-00-933-8121	233	13
		5310-00-933-8121	234	18
		5310-00-933-8121	266	5
96906	MS35338-140	5310-00-974-6623	215	21
96906	MS35338-141	5310-00-984-7042	69	31
		5310-00-984-7042	215	14
		5310-00-984-7042	234	7
96906	MS35338-158	5310-00-883-9417	217	7
		5310-00-883-9417	221	2
96906	MS35338-43	5310-00-045-3296	149	9
		5310-00-045-3296	277	13
96906	MS35338-44	5310-00-582-5965	59	7
96906	MS35338-45	5310-00-407-9566	45	7
		5310-00-407-9566	214	2
		5310-00-407-9566	277	27
		5310-00-407-9566	278	6
		5310-00-407-9566	278	6
96906	MS35338-46	5310-00-637-9541	58	3
		5310-00-637-9541	63	1

CROSS REFERENCE INDEXES

PART NUMBER INDEX

FSCM	PART NUMBER	STOCK NUMBER	FIGURE NO	ITEM NO
		5310-00-637-9541	64	8
		5310-00-637-9541	65	2
		5310-00-637-9541	211	3
		5310-00-637-9541	272	22
		5310-00-637-9541	274	14
96906	MS35338-48	5310-00-584-5272	255	10
		5310-00-584-5272	256	10
96906	MS35338-98	5310-00-184-8977	231	4
96906	MS35340-44	5310-00-682-5930	216	3
96906	MS35387-1	9905-00-205-2795	244	2
96906	MS35387-2	9905-00-202-3639	243	2
96906	MS35421-1	6220-00-299-7425	61	9
		6220-00-299-7425	230	3
96906	MS35421-2	6220-00-299-7426	62	8
		6220-00-299-7426	230	3
96906	MS35423-3	6220-00-113-0986	230	1
96906	MS35423-4	6220-00-741-1843	230	1
96906	MS35426-27	5310-01-100-5199	35	3
96906	MS35489-141	5325-01-288-7881	259	15
96906	MS35489-23X	5325-01-340-1286	245	2
96906	MS35489-6	5325-00-263-6632	205	7
		5325-00-263-6632	240	9
96906	MS35489-94	5325-00-262-9162	266	14
96906	MS35493-78	5305-00-180-1991	218	20
96906	MS35649-103	5310-00-852-8593	149	10
96906	MS35649-2254	5310-00-250-9477	52	70
		5310-00-250-9477	53	83
		5310-00-250-9477	266	6
96906	MS35649-244	5310-00-934-9748	225	13
		5310-00-934-9748	235	9
96906	MS35649-262	5310-00-934-9747	52	60
		5310-00-934-9747	53	74
		5310-00-934-9747	78	25
		5310-00-934-9747	281	11
96906	MS35649-264	5310-00-934-9761	61	4
		5310-00-934-9761	62	3
96906	MS35649-282	5310-00-934-9757	269	9
		5310-00-934-9757	281	16
96906	MS35649-284	5310-00-934-9759	52	57
		5310-00-934-9759	53	70
		5310-00-934-9759	78	22
96906	MS35650-304	5310-00-934-9765	259	8
96906	MS35650-3252	5310-00-043-0520	263	8
96906	MS35650-3254	5310-00-400-5503	234	19
96906	MS35650-3384	5310-00-245-3612	234	6
96906	MS35650-344	5310-00-938-2012	227	9
96906	MS35690-804	5310-00-808-8019	134	7
96906	MS35691-33	5310-00-834-8732	30	29
96906	MS35691-53	5310-00-835-2037	155	24
		5310-00-835-2037	155	30
96906	MS35751-164	5306-00-268-2440	218	40
		5306-00-268-2440	219	6

CROSS REFERENCE INDEXES

PART NUMBER INDEX

FSCM	PART NUMBER	STOCK NUMBER	FIGURE NO	ITEM NO
		5306-00-268-2440	220	19
96906	MS35756-9	5315-00-616-5525	6	5
		5315-00-616-5525	11	4
96906	MS35842-11	4730-00-908-3194	26	34
96906	MS35842-14	4730-00-908-6292	257	33
		4730-00-908-6292	263	4
96906	MS35869-22	4730-00-266-0533	137	20
96906	MS35869-45	4730-00-266-0543	285	3
96906	MS39324-12-10	4730-01-096-9138	252	24
96906	MS51074-1	2590-00-683-0598	68	2
96906	MS51113-1	5930-00-307-8856	50	1
96906	MS51117-1	2540-00-047-3926	171	6
96906	MS51414-1	5310-01-235-2057	281	6
96906	MS51414-2	5310-01-310-1098	281	19
96906	MS51492-03	5305-01-334-6785	52	66
		5305-01-334-6785	53	80
96906	MS51500A10	4730-00-278-4311	43	36
96906	MS51504A4	4730-00-647-3207	154	10
96906	MS51515A4	4730-00-443-4738	251	9
96906	MS51516A12S	4730-00-194-4518	252	49
96906	MS51520A4	4730-00-679-9280	250	14
96906	MS51525A12	4730-00-710-5571	252	4
96906	MS51525A4	4730-01-007-5232	154	8
		4730-01-007-5232	247	7
		4730-01-007-5232	248	10
		4730-01-007-5232	251	11
96906	MS51527A16	4730-00-840-7236	160	1
96906	MS51527A20	4730-00-019-1489	252	7
96906	MS51527A4P	4730-00-811-1848	250	6
96906	MS51527A4Z	4730-01-025-6805	248	2
		4730-01-025-6805	251	5
		4730-01-025-6805	253	1
96906	MS51527A6	4730-00-143-3941	29	25
		4730-00-143-3941	160	4
96906	MS51527A8	4730-00-822-5609	43	9
		4730-00-822-5609	44	6
		4730-00-822-5609	252	32
96906	MS51534A6-4	4730-00-706-8711	16	18
96906	MS51553-518	5310-01-394-5970	207	14
96906	MS51844-66	4030-01-209-7478	166	3
96906	MS51848-50	5310-01-033-8615	213	20
96906	MS51849-65	5305-01-006-2052	69	5
		5305-01-006-2052	69	49
96906	MS51849-66	5305-00-179-8946	50	6
96906	MS51849-67	5305-00-174-4500	69	44
96906	MS51849-75	5305-01-006-2053	26	19
96906	MS51859-10	5310-01-006-3919	270	23
96906	MS51859-16	5310-01-381-9990	259	12
96906	MS51860-58	4730-01-093-8464	252	45
96906	MS51861-46C	5305-00-477-0120	69	55
96906	MS51922-1	5310-00-088-1251	189	9
96906	MS51922-33	5310-00-269-4040	281	15

CROSS REFERENCE INDEXES

PART NUMBER INDEX

FSCM	PART NUMBER	STOCK NUMBER	FIGURE NO	ITEM NO
96906	MS51922-38	5310-00-171-2444	172	9
96906	MS51922-49	5310-00-269-4040	279	3
96906	MS51922-9	5310-00-984-3806	270	8
		5310-00-984-3806	270	18
96906	MS51929-3	5340-00-297-6637	271	19
96906	MS51937-10	5306-00-211-8002	282	4
96906	MS51943-52	5310-00-241-6666	163	32
		5310-00-241-6666	164	22
		5310-00-241-6666	207	21
96906	MS51953-10	4730-00-196-1482	189	20
96906	MS51957-17	5305-00-054-5651	225	17
		5305-00-054-5651	227	1
96906	MS51957-24	5305-00-054-6648	259	6
96906	MS51957-28	5305-00-054-6652	221	12
96906	MS51957-30	5305-00-054-6654	221	15
96906	MS51957-37	5305-00-054-6661	215	11
96906	MS51957-45	5305-00-054-6670	226	3
		5305-00-054-6670	227	14
		5305-00-054-6670	235	7
		5305-00-054-6670	235	7
96906	MS51957-48	5305-00-054-6673	231	15
96906	MS51957-51	5305-00-054-6676	231	14
96906	MS51957-55	5305-00-054-6682	52	50
		5305-00-054-6682	53	85
96906	MS51957-65	5305-00-050-9231	220	16
96906	MS51957-7	5305-00-054-5641	259	11
96906	MS51957-81	5305-00-082-6721	221	8
		5305-00-082-6721	225	42
		5305-00-082-6721	232	12
96906	MS51957-96	5305-00-051-0837	215	20
96906	MS51958-60	5305-00-059-3656	259	3
96906	MS51958-62	5305-00-059-3658	231	9
96906	MS51958-63	5305-00-059-3659	46	14
		5305-00-059-3659	266	33
		5305-00-059-3659	273	1
96906	MS51958-65	5305-00-059-3661	227	8
		5305-00-059-3661	230	5
96906	MS51958-66	5305-00-059-3662	213	1
96906	MS51958-68	5305-00-059-3664	217	5
96906	MS51958-70	5305-00-059-3666	225	37
96906	MS51958-84	5305-00-171-2094	234	15
96906	MS51959-84	5305-00-719-5003	215	19
96906	MS51967-14	5310-00-768-0318	69	36
		5310-00-768-0318	255	9
		5310-00-768-0318	256	9
		5310-00-768-0318	270	24
96906	MS51967-17	5310-00-763-8913	129	7
96906	MS51967-2	5310-00-761-6882	266	48
96906	MS51967-5	5310-00-880-7744	278	7
		5310-00-880-7744	278	7
		5310-00-880-7744	285	22
96906	MS51967-8	5310-00-732-0558	64	9

CROSS REFERENCE INDEXES

PART NUMBER INDEX

FSCM	PART NUMBER	STOCK NUMBER	FIGURE NO	ITEM NO
		5310-00-732-0558	272	24
96906	MS51968-14	5310-00-732-0560	255	16
		5310-00-732-0560	256	15
96906	MS51968-2	5310-00-768-0319	59	1
		5310-00-768-0319	59	8
96906	MS51968-23	5310-00-763-8901	154	16
96906	MS51969-3	5310-00-903-3994	69	9
96906	MS51971-3	5310-00-913-8881	69	28
96906	MS51975-16	5305-00-914-3821	214	9
96906	MS51975-28	5305-00-914-4171	214	6
96906	MS51988-3	5310-00-159-1577	208	1
96906	MS52125-1	6220-00-134-9098	60	3
96906	MS52126-1	6220-01-343-7564	65	3
96906	MS52149-2	6140-01-051-4900	69	25
96906	MS53007-1	9905-00-999-7370	135	9
96906	MS75021-2	5935-00-846-3884	73	11
96906	MS9021-225	5330-00-527-7939	44	9
96906	MS9025-23	5340-00-027-8737	43	18
96906	MS90558C44412P	5935-01-103-6064	234	14
96906	MS90558C44412S	5935-01-093-5199	234	16
96906	MS90724-40	5310-00-490-4639	182	23
96906	MS90725-113	5305-01-325-8388	255	12
		5305-01-325-8388	256	16
		5305-01-325-8388	277	15
96906	MS90725-33	5306-00-225-8498	277	19
96906	MS90725-38	5306-00-225-8503	278	3
		5306-00-225-8503	278	3
96906	MS90725-6	5305-00-068-0502	47	22
96906	MS90725-71	5305-00-269-3221	274	15
96906	MS90726-64	5305-00-269-3240	267	6
96906	MS90727-58	5305-00-269-3234	155	9
96906	MS90728-8	5305-00-225-3843	213	21
96906	MS9352-10	5340-00-005-0537	258	29
96906	MS9352-18	5340-01-090-8916	258	34
96906	MS9770-116	5330-01-388-4084	188	39
96906	MS9955-113	5330-01-374-2325	188	2
57094	MT8002-13-1	5325-01-423-0783	88	10
57094	MT92374	5935-01-390-0329	86	18
81349	MW-C6 (133) J4	6145-00-926-6300	BULK	11
78500	MWA-510	5310-01-333-3561	130	27
		5310-01-333-3561	132	27
35510	M0017703MD	2920-01-364-1598	47	2
35510	M002071025	2920-00-728-2040	47	23
35510	M010071035	5977-00-758-9555	47	14
35510	M012225340		47	20
35510	M014225337		47	46
05824	M10X1.5X30 DIN93 3 ST	5305-01-140-2490	30	9
		5305-01-140-2490	34	11
		5305-01-140-2490	38	1
		5305-01-140-2490	39	4
		5305-01-140-2490	40	10

CROSS REFERENCE INDEXES

PART NUMBER INDEX

FSCM	PART NUMBER	STOCK NUMBER	FIGURE NO	ITEM NO
		5305-01-140-2490	69	51
		5305-01-140-2490	189	13
		5305-01-140-2490	247	2
81349	M13444T1.25X12		258	19
81349	M13444T1.25X3		258	15
81349	M13444T1.25X3.5		258	13
81349	M13444T1.25X48		258	20
81349	M13444T1.250		30	20
			268	6
81349	M13444T1.250X140		264	22
81349	M13444T1.250X144		264	21
81349	M13444T1.250X72		264	39
81349	M13444T1.31X23		41	20
81349	M13444T1.375X14		266	43
81349	M13444T1.375X23		266	39
81349	M13444T1.375X24		34	9
81349	M13444T1.375X30		266	40
81349	M13444T1.375X72		266	30
81349	M16878/14BKE9	6145-01-229-4134	BULK	12
81349	M16878/14BKE90		BULK	13
81349	M16878/14BKE91		BULK	14
81349	M16878/14BKE92		BULK	15
81349	M16878/16-BKE0		BULK	16
81349	M16878/16-BKE1		BULK	17
81349	M16878/16-BKE2		BULK	18
81349	M16878/16-BKE4		BULK	19
81349	M16878/16-BKE5		BULK	20
81349	M16878/16-BKE6		BULK	21
81349	M16878/16-BKE9		BULK	22
81349	M16878/16-BLE0		BULK	23
81349	M16878/16-BLE1		BULK	24
81349	M16878/16-BLE2		BULK	25
81349	M16878/16-BLE4		BULK	26
81349	M16878/16-BLE5		BULK	27
81349	M16878/16-BLE9		BULK	28
81349	M16878/16-BLG6		BULK	29
81349	M16878/16-BMG0		BULK	30
81349	M16878/16-BMG2		BULK	31
81349	M16878/16-BMG5		BULK	32
81349	M16878/16-BMG6		BULK	33
81349	M16878/16-BMG9		BULK	34
81349	M16878/16-BPL0		BULK	35
81349	M16878/16-BPL2		BULK	36
81349	M16878/16-BPL5		BULK	37
81349	M16878/16-BPL6		BULK	38
81349	M16878/16-BPL9		BULK	39
81349	M16878/16-BSL0		BULK	40
81349	M16878/16-BSL2		BULK	41
81349	M16878/16-BSL6		BULK	42
81349	M16878/16-BSP5		BULK	43
81349	M16878/16-BSP9		BULK	44
81349	M16878/16BRL0	6145-01-419-3345	BULK	45

CROSS REFERENCE INDEXES

PART NUMBER INDEX

FSCM	PART NUMBER	STOCK NUMBER	FIGURE NO	ITEM NO
81349	M16878/16BUS0	6145-01-419-3913	BULK	46
81349	M16878/16BWT0		BULK	47
81349	M16879/14BJE9	6145-01-241-0961	259	19
81349	M23053/4-302-0	5970-01-161-6796	90	7
81349	M23053/5-207C	5970-00-727-6728	261	4
81349	M24243/1-B302	5320-00-999-0397	246	2
81349	M25988/1-246	5330-01-189-6351	64	3
81349	M28840/24HA	5935-01-421-9754	78	24
81349	M39029/4-111	5999-00-172-8254	90	8
D8286	M4X12DIN7985-8-8 -B3B	5305-12-187-5147	260	18
		5305-12-187-5147	265	13
81349	M43436/1-1	9905-00-752-4649	52	6
		9905-00-752-4649	53	6
		9905-00-752-4649	71	14
		9905-00-752-4649	76	8
		9905-00-752-4649	79	3
		9905-00-752-4649	80	3
		9905-00-752-4649	81	3
		9905-00-752-4649	82	5
		9905-00-752-4649	83	6
		9905-00-752-4649	84	5
		9905-00-752-4649	85	5
		9905-00-752-4649	86	8
		9905-00-752-4649	87	8
		9905-00-752-4649	88	14
		9905-00-752-4649	90	6
		9905-00-752-4649	101	3
		9905-00-752-4649	104	11
		9905-00-752-4649	266	66
81349	M43436/1-2	9905-00-841-4445	52	7
		9905-00-841-4445	53	7
		9905-00-841-4445	71	8
		9905-00-841-4445	73	9
		9905-00-841-4445	79	4
		9905-00-841-4445	83	5
		9905-00-841-4445	86	9
		9905-00-841-4445	87	4
		9905-00-841-4445	88	4
		9905-00-841-4445	94	4
		9905-00-841-4445	95	4
		9905-00-841-4445	96	4
		9905-00-841-4445	104	15
81349	M43436/1-3	9905-00-893-3570	52	13
		9905-00-893-3570	53	13
		9905-00-893-3570	71	2
		9905-00-893-3570	72	4
		9905-00-893-3570	76	4
		9905-00-893-3570	77	7
		9905-00-893-3570	84	12
		9905-00-893-3570	85	14
		9905-00-893-3570	86	5

CROSS REFERENCE INDEXES

PART NUMBER INDEX

FSCM	PART NUMBER	STOCK NUMBER	FIGURE NO	ITEM NO
		9905-00-893-3570	88	7
		9905-00-893-3570	91	4
		9905-00-893-3570	92	4
		9905-00-893-3570	93	4
		9905-00-893-3570	97	4
		9905-00-893-3570	98	4
		9905-00-893-3570	99	4
		9905-00-893-3570	100	4
		9905-00-893-3570	104	2
		9905-00-893-3570	261	4
		9905-00-893-3570	262	4
		9905-00-893-3570	266	54
		9905-00-893-3570	266	58
		9905-00-893-3570	266	62
81349	M43436/1-4	9905-00-945-7637	267	9
		9905-00-945-7637	71	7
		9905-00-945-7637	72	3
		9905-00-945-7637	75	6
		9905-00-945-7637	84	4
		9905-00-945-7637	85	4
81349	M45595/1-12	5310-01-314-6722	259	14
81349	M45952/1-C10-20	5315-01-K63-8262	189	27
81349	M45952/1C4-16	5315-01-048-5055	221	10
D8286	M5X12DIN7985-4-8 A2P	5305-12-142-5547	260	31
96906	M51321-2-24H1		266	41
81349	M55149/08-NA-01	5940-00-937-5237	234	2
81349	M55149/08-NA-02	5940-00-926-8162	234	4
81349	M55629/2-127	5925-00-570-4602	259	7
81349	M6202823121715	4720-01-442-7836	257	20
81349	M6202823444884	4720-01-386-5655	263	1
81349	M62217/1-10-BULK	4720-01-132-7124	BULK	48
81349	M62217/1-10-4		264	25
81349	M62217/1-10-6		264	23
81349	M62217/1-10BULK	4720-01-132-7124	BULK	49
81349	M62217/1-12-BULK LG	4720-01-047-9541	BULK	50
81349	M62217/1-12-165		264	27
81349	M62217/1-12-180		264	36
81349	M62217/1-12-3.50		264	17
81349	M62217/1-12-66		257	2
81349	M62217/1-16-16		258	25
81349	M62217/1-16-38		258	27
81349	M62217/1-16-40		258	24
81349	M62217/1-16-5		258	37
81349	M62217/1-16-80		257	34
81349	M62217/1-16BULK	4720-01-122-9847	BULK	51
81349	M62217/1-24-15		257	15
81349	M62217/1-24-2.31		258	11
81349	M81940/2-1	4820-01-298-8416	252	43
81349	M83248-2-908	5330-00-167-5173	35	16
81349	M83248/1-906	5330-00-020-0186	47	47

CROSS REFERENCE INDEXES

PART NUMBER INDEX

FSCM	PART NUMBER	STOCK NUMBER	FIGURE NO	ITEM NO
81349	M83420/4-005	4010-01-026-1855	BULK	52
		4010-01-026-1855	166	2
81349	M83461/1-438	5330-01-160-4337	247	35
81349	M83461/1-442	5330-01-183-0987	247	82
81349	M85049/51-1-20W	5935-01-186-5610	261	6
81349	M85049/52-1-16W	5935-01-171-1966	261	3
06721	N-11728-ST		285	26
06721	N11728-SV		285	25
06721	N11728-SZ		285	24
06721	N-14149-F		285	37
06721	N-20415-NB	3040-01-382-8736	135	5
		3040-01-382-8736	136	12
06721	N-20415-PB	4730-01-384-1441	135	2
		4730-01-384-1441	136	9
06721	N-20455	4820-01-359-6361	141	4
06721	N-30250-A		285	19
06721	N-30255	2540-01-337-4105	149	11
06721	N-30256-C	4820-01-363-2117	138	4
06721	N-30257-A		135	1
06721	N-32061-B	4820-01-372-8139	138	11
06721	N-30263	2530-01-361-2211	150	6
06721	N-50000	4820-01-360-6152	138	25
		4820-01-360-6152	144	5
		4820-01-360-6152	151	7
		4820-01-360-6152	152	4
06721	N-50002	2530-01-383-5209	145	3
06721	N-50004	2530-01-332-1583	143	7
06721	N-50009	2530-01-332-1326	137	3
06721	N-50012	2530-01-360-4446	141	2
06721	N-50016A	2530-01-384-9002	140	8
06721	N-50024	2530-01-360-9193	142	4
80205	NAS1149C0463R	5310-01-352-9593	216	4
80205	NAS1329S3B130	5310-00-177-7628	225	32
80205	NAS1330S3B166	5310-00-881-1616	234	13
		5310-00-881-1616	235	3
		5310-00-881-1616	235	16
80205	NAS1454C6-0300	5307-01-111-9509	234	8
80205	NAS3106-15-14	5306-01-442-4848	257	5
55719	NDM60A	5120-01-335-1023	288	22
85814	NSM-18-12F-CANNO N	5930-01-384-5419	66	6
79470	NT-100-6	4720-01-014-4915	BULK	53
79470	NT-10004-BLK	4720-00-443-4746	BULK	54
06721	N10949F		285	38
06721	N11728BC		285	40
06721	N11728GP		285	17
06721	N11728GT		285	43
76761	N1216-1	6115-01-433-8557	272	35
06721	N13526H	4820-00-633-3523	138	16
06721	N13552AD	4810-01-368-0058	285	16
76761	N1506-1	6115-01-419-4033	46	1
05779	N3-15CN-2-10B-15	4330-01-383-2290	254	22

CROSS REFERENCE INDEXES

PART NUMBER INDEX

FSCM	PART NUMBER	STOCK NUMBER	FIGURE NO	ITEM NO
	158			
06721	N30252B	4820-01-443-5012	135	18
06721	N30257	2530-01-422-2827	136	8
06721	N32062	2530-01-383-5846	150	9
76761	N3029	6110-01-438-6252	273	36
76761	N3030	6110-01-420-1229	46	30
06721	N50013D	2530-01-361-5075	154	1
05779	N72143		254	24
76761	N7309	6115-01-349-5320	273	40
76761	N7312	2920-01-363-5173	273	21
76761	N7357	2920-01-363-5172	273	28
76761	N7358	2920-01-363-5147	273	30
76761	N7395	2920-01-363-5182	273	31
76761	N7401	2920-01-399-0794	46	21
76761	N7427	5340-01-422-4327	46	13
76761	N7428	5950-01-424-4089	46	20
76761	N7429	6105-01-423-0136	46	19
76761	N7431	6115-01-423-0138	46	17
76761	N7441	5999-01-440-0370	273	7
76761	N7442	5999-01-440-0342	273	11
76761	N9005	5305-01-032-4165	46	4
		5305-01-032-4165	273	14
76761	N9008	5325-01-032-4222	273	17
76761	N9009	5325-01-034-2757	273	13
76761	N9010	3110-01-037-4661	273	12
76761	N9014	5306-01-179-3346	273	8
76761	N9015	5310-01-046-0186	46	42
		5310-01-046-0186	273	9
76761	N9016	5310-01-032-4169	46	16
		5310-01-032-4169	273	3
76761	N9018	5310-01-032-4827	46	15
		5310-01-032-4827	273	2
76761	N9040	5315-01-166-2355	273	29
76761	N9062	5310-01-232-1363	46	39
76761	N9063	5310-01-050-6565	46	27
		5310-01-050-6565	273	42
76761	N9077	5306-01-223-4345	273	43
76761	N9091	5310-01-050-5005	273	23
76761	N9099	5310-01-165-1312	46	12
		5310-01-165-1312	273	10
76761	N9199	5305-01-362-6121	273	37
76761	N9256	5325-01-136-4880	46	11
76761	N9260	5325-01-136-7662	46	8
76761	N9265	5310-01-136-4888	46	5
		5310-01-136-4888	273	15
76761	N9320	5310-01-166-2373	273	22
76761	N9331	5310-01-232-1361	273	25
76761	N9338	5310-01-232-1362	46	25
		5310-01-232-1362	273	44
76761	N9374	5310-01-362-7266	273	5
76761	N9385	3110-01-348-4867	46	23
		3110-01-348-4867	273	32

CROSS REFERENCE INDEXES

PART NUMBER INDEX

FSCM	PART NUMBER	STOCK NUMBER	FIGURE NO	ITEM NO
76761	N9393	5310-01-348-8384	46	3
76761	N9395	3120-01-362-4502	273	6
76761	N9405	3120-01-362-5055	273	33
76761	N9406	5310-01-362-6171	273	4
76761	N9410	5310-01-348-8398	46	34
		5310-01-348-8398	273	39
76761	N9413	5920-01-440-2790	273	24
76761	N9416	5310-01-348-8360	46	2
76761	N9438	2920-01-363-5179	273	16
76761	N9451	5315-01-348-6880	46	18
76761	N9453	5310-01-348-8314	273	27
76761	N9455	5310-01-348-8385	46	37
		5310-01-348-8395	273	20
76761	N9459	5310-01-348-8393	46	32
76761	N9461	5310-01-348-8392	273	26
76761	N9465	5310-01-350-8549	46	44
		5310-01-350-8549	273	35
76761	N9467	5310-01-350-4257	46	43
		5310-01-350-4257	273	34
76761	N9486	3130-01-396-8388	46	10
76761	N9491	4140-01-397-2228	46	29
76761	N9492	3120-01-424-1525	46	7
76761	N9493	5340-01-396-3950	46	6
76761	N9494	5325-01-396-4320	46	9
76761	N9495	5306-01-430-8802	46	24
76761	N9498	5306-01-430-8791	46	41
		5306-01-430-8791	273	18
76761	N9501	4140-01-439-1956	273	45
76761	N9544	5310-01-423-0781	273	47
76761	N9545	3120-01-424-1028	46	22
76761	N9553	5305-00-021-3620	46	31
76761	N9554	5310-01-422-8575	46	38
76761	N9555	5920-01-422-3648	46	35
76761	N9556	5310-01-423-0880	46	40
76761	N9557		46	36
76761	N9558	4140-01-422-2618	46	26
76761	N9574	5310-01-439-0818	273	19
76761	N9575	3120-01-439-4848	273	46
20076	OR420A	5330-01-389-6028	155	5
98624	OS5763	5340-01-383-2413	30	23
81349	PB08NA01	5940-00-937-5237	225	9
81349	PB08NA02	5940-00-926-8162	225	8
61424	PFT-10B-BLK-100	4720-01-009-9058	BULK	55
58451	PL1309	6240-00-060-4707	228	2
0TE27	PM0616	4730-01-377-7523	67	4
26952	PP790900	2590-01-421-1655	189	42
26952	PP938900-1	2510-01-417-2285	189	37
26952	PP939900-1	2510-01-417-2280	189	14
26952	PP941900	3040-01-429-8345	189	8
4B046	PP975900	4820-01-438-1521	189	3
72629	PTMC125	5340-00-190-6767	258	33
18265	P01-6972	5330-00-477-0338	26	15

CROSS REFERENCE INDEXES

PART NUMBER INDEX

FSCM	PART NUMBER	STOCK NUMBER	FIGURE NO	ITEM NO
18265	P10-9270	2990-01-385-5730	26	7
18265	P10-9281	5315-01-370-7199	26	6
18265	P11-3550	5330-01-370-0662	26	8
18265	P128160	4730-01-081-6467	26	2
18265	P20-6606	5340-01-386-8163	38	10
		5340-01-386-8163	39	9
		5340-01-386-8163	268	33
18265	P215432		38	6
21649	P3-90108	5930-01-406-7217	50	4
01226	P304B	5340-00-839-1981	270	33
18265	P52-7750	2940-01-361-2407	26	16
18265	P52-7751	5340-01-369-3441	26	12
18265	P530245	2940-01-393-0970	26	10
18265	P530288	5340-01-371-0943	26	14
18265	P530414	2940-01-442-7349	26	24
18265	P530516	4710-01-370-5542	26	44
18265	P530946	5340-01-398-2818	26	11
18265	P535537	4720-01-K65-1431	26	38
18265	P535538	4720-01-439-5075	26	47
0FW39	P539693		26	13
18265	P5539	4720-01-440-7367	26	27
18265	P5540	4720-01-439-5076	26	27
61112	QA-3-1TC	2910-01-190-4206	35	14
66842	QJ23B200X		232	4
03010	QOU150	5925-01-395-1496	281	2
61112	QS-1181	5330-01-058-3788	35	10
78280	QS-1428	4730-01-389-9629	35	15
78280	QS5-5CTP	4810-01-442-8695	35	8
66842	Q330	5925-00-124-5015	232	9
39572	Q350	5925-01-271-0695	232	8
77060	R-67587	4720-01-423-2965	BULK	56
77060	R-68234	4720-01-421-9723	BULK	57
77060	R-71305	4720-01-422-0242	BULK	58
56501	RA257	5940-00-436-1632	53	73
78500	RDA-1550-873		134	1
78500	RDA-1550-874		134	1
78500	REBC16S	5340-01-161-6344	128	1
78500	RF-12611-NFSF-7-780	2520-01-357-1585	129	1
55752	RK11-1677	5340-01-416-9971	34	3
55752	RK22140		34	4
55752	RK22141	2910-01-418-7593	34	7
06721	RN-60-A	4440-01-337-7324	KITS	
00062	RPPD-200	5945-01-440-9799	272	5
78500	RS-15611-NFSF-4-	2520-01-361-2516	131	1
78500	RSA-1550-869		133	1
78500	RSA-1550-870		133	1
55752	R22146	2910-01-360-6366	34	5
04071	R354273-11	5999-01-153-9432	52	18
78500	R674X	2520-01-362-1089	KITS	
		2520-01-362-1089	KITS	
78500	S-21416-A-2	5305-01-392-1634	129	15

CROSS REFERENCE INDEXES

PART NUMBER INDEX

FSCM	PART NUMBER	STOCK NUMBER	FIGURE NO	ITEM NO
78500	S-21418-A-2	5305-01-407-1612	129	3
78500	S-2924-2-A	5305-01-390-8490	131	7
75535	S-421-1/2	4030-01-255-2753	237	67
82484	S-4706		241	14
81343	SAE J1508-06	4730-00-908-3195	149	14
		4730-00-908-3195	266	28
81343	SAE J30R2TYPE1-1 /2 IN ID	4720-01-394-8135	BULK	59
81343	SAE J30R2TYPE1-3 /8 IN ID	4720-01-394-8138	BULK	60
81343	SAE100R4-16	4720-00-882-1379	268	11
68505	SBC-4401E-1	2920-01-361-5802	48	2
81337	SC-B-200153	5365-01-344-6854	217	9
80063	SC-C-200154	5410-00-231-6429	217	8
20999	SCS-HB21	7690-01-423-0249	91	5
		7690-01-423-0249	92	5
		7690-01-423-0249	93	5
		7690-01-423-0249	94	5
		7690-01-423-0249	95	5
		7690-01-423-0249	96	5
		7690-01-423-0249	97	5
		7690-01-423-0249	98	5
		7690-01-423-0249	99	5
		7690-01-423-0249	100	5
09922	SC14M-1TK6	5999-01-340-7698	52	26
		5999-01-340-7698	53	30
		5999-01-340-7698	71	6
		5999-01-340-7698	84	3
		5999-01-340-7698	87	3
		5999-01-340-7698	88	3
09922	SC16M-1TK6	5999-01-195-0606	52	25
		5999-01-195-0606	53	29
		5999-01-195-0606	72	5
07707	SD52BS	5320-00-850-3248	182	13
09990	SK10-2	5330-01-350-4474	249	36
09990	SK10-3	5330-01-350-4472	249	34
09990	SK10-4	5330-01-343-2745	249	28
		5330-01-343-2745	249	30
80063	SM-A-937236S2B1		221	17
80063	SM-A-937236S7B4		215	2
81337	SM-B-162197	5365-01-344-6855	217	12
80063	SM-B-650093	5340-01-065-8967	218	32
80063	SM-C-563711-12	5310-01-283-1104	215	17
80063	SM-C-563711-13		215	23
			218	25
			219	27
			220	14
80063	SM-C-563711-2	5310-00-929-6452	233	2
80063	SMD331453-1	5305-00-521-8636	247	33
09922	SMS12P-1	5935-01-108-4522	71	4
		5935-01-108-4522	86	2
09922	SMS12R-1	5935-01-013-9680	52	24

CROSS REFERENCE INDEXES

PART NUMBER INDEX

FSCM	PART NUMBER	STOCK NUMBER	FIGURE NO	ITEM NO
		5935-01-013-9680	53	28
		5935-01-013-9680	72	6
09922	SMS18P-1	5935-01-222-2700	52	38
		5935-01-222-2700	53	47
		5935-01-222-2700	85	2
		5935-01-222-2700	104	18
09922	SMS18R-1		52	37
			53	46
			84	2
			87	2
09922	SMS24P-1	5935-01-072-3922	104	20
09922	SMS24R-1	5935-01-095-1563	88	2
09922	SMS36P-1	5935-01-072-3924	52	23
		5935-01-072-3924	53	27
09922	SMS36R-1	5935-01-160-0013	71	5
09922	SMS9P-1	5935-01-422-8717	86	25
09922	SMS9R-1	5935-01-422-0363	72	7
09922	SM14M-1TK6	5999-01-327-6598	52	39
		5999-01-327-6598	53	48
		5999-01-327-6598	71	3
		5999-01-327-6598	85	3
		5999-01-327-6598	86	3
		5999-01-327-6598	104	19
09922	SM16M-1TK6	5999-01-195-0605	52	22
		5999-01-195-0605	53	26
		5999-01-195-0605	86	4
		5999-01-195-0605	104	17
78500	SP-1013		128	2
56493	SP-610-B		50	7
65664	SPHS-224-9		52	53
			53	66
65664	SPHS-274-9		52	54
			53	67
98624	SS5219	2910-01-372-1552	30	22
98624	SS5756	2590-01-372-6500	30	30
98624	SS5766REVE	4320-01-374-4316	254	15
98624	SS5809	2590-01-388-4717	254	13
98624	SS5811	5340-01-372-0377	254	1
18265	STB140202REV14		26	5
16632	STE1002	4720-01-370-2999	28	7
		4720-01-370-2999	41	16
		4720-01-370-2999	124	15
0VXY8	STN2.38X.5	5330-01-440-1092	BULK	61
98255	SW26098	5935-01-360-3994	87	13
03481	S10-266	5310-01-397-8760	213	4
03481	S10-330	5310-00-426-2651	217	1
03481	S25B200	5310-00-827-8976	232	15
03481	S25B331	5310-00-403-5855	213	18
		5310-00-403-5855	216	7
03481	S25KB211	5310-00-413-4838	216	6
78500	S255Z	5305-01-357-1656	133	16
		5305-01-357-1656	134	22

CROSS REFERENCE INDEXES

PART NUMBER INDEX

FSCM	PART NUMBER	STOCK NUMBER	FIGURE NO	ITEM NO
78500	S2922A2	5305-01-390-8485	129	62
25472	S31B350	5310-00-934-0222	214	10
03481	S37B200	5310-00-929-6454	211	2
18076	S463H-56	5340-01-377-1548	148	16
		5340-01-377-1548	252	52
25472	S6-160	5310-00-616-3823	221	14
0VK23	S6B321		215	7
18076	S630H-10		70	7
			78	2
18076	S630H-12		148	19
18076	S630H-16		189	21
			250	13
			148	23
			70	4
			148	2
			250	12
18076	S630H-20	5340-01-423-0972	41	35
		5340-01-423-0972	148	18
18076	S630H-24	5340-01-377-6171	102	6
		5340-01-377-6171	148	5
		5340-01-377-6171	161	5
		5340-01-377-6171	268	26
18076	S630H-32		41	37
			148	13
			252	53
18076	S630H-36		26	49
			148	11
			247	17
18076	S630H-40		78	34
			148	9
18076	S630H-8		272	31
25472	S8B161	5310-01-240-1604	220	8
62161	T 1001	2530-01-370-5462	155	8
06481	T-218758	4730-00-908-6293	26	26
		4730-00-908-6293	268	36
08992	TA330-10-10-R	4820-01-204-8364	255	7
		4820-01-204-8364	256	7
78799	THINWALL1INCH	5975-00-178-1218	BULK	62
85814	TM-9A-230R-CANNO	2990-01-439-3058	66	4
0FW39	TVS15400		181	18
0FW39	TVS20772		181	13
			181	36
0FW39	TV950049-001	2530-01-K64-9258	158	24
0FW39	TV950079-001	6630-01-435-7338	69	56
0FW39	TV980007		241	17
81348	TYIV/CL1/TRVC8	2640-01-098-2029	155	33
81348	TYV/CL2/TR C1	2640-00-050-1229	155	34
0FW39	T12415310	5340-01-389-2408	181	49
0FW39	T12415311	5340-01-389-2367	181	35
81345	UL514A2.25X4.25		225	22
26952	UTTN91008.19	3040-01-370-5486	251	8
62380	U4810	4320-01-381-2850	264	12

CROSS REFERENCE INDEXES

PART NUMBER INDEX

FSCM	PART NUMBER	STOCK NUMBER	FIGURE NO	ITEM NO
24825	V-100-12418384-0 01	2510-01-377-4333	200	6
77342	VF4-15F11-S05	5945-01-382-8214	52	79
		5945-01-382-8214	53	96
77342	VF4-15F11-S05	5945-01-382-8925	52	81
		5945-01-382-8925	53	94
17875	VS1090	2640-01-367-5015	155	32
2K677	V192120002	2510-01-364-8306	193	10
91929	V31D8	5930-01-279-4428	227	3
93061	V50SS-16	4820-01-383-5329	257	12
81348	W-L-00111/60	6240-00-155-8717	61	7
		6240-00-155-8717	62	6
		6240-00-155-8717	230	4
81348	W-L-00111/66	6240-00-143-3159	60	12
		6240-00-143-3159	65	4
82484	W-22-105	4720-01-209-3352	240	2
0PKM9	WCSI-847301	5340-01-424-3550	172	40
81348	WC375/05-001	5925-00-413-1210	232	11
81348	WC375/05-002	5925-01-097-2535	232	10
27797	WM1058		201	2
			202	2
			203	2
27797	WM1059		201	1
			202	1
			203	1
51814	WST-300	5325-01-368-2733	277	18
81348	WS896/2-03A-G		225	23
81348	WS896/2-06A-6		225	40
QPKM9	WW-8X500		271	16
66295	WWD48-58H	4730-00-908-3193	21	7
		4730-00-908-3193	258	12
73287	WW519S18	5310-00-970-4387	218	9
		5310-00-970-4387	219	12
62292	W2E 200-HH86-01		233	6
77342	W23X1A1G-20	5925-00-399-5055	231	7
77342	W23X1A1G-5	5925-00-074-9180	231	8
74410	XB-781-1	5315-01-369-1346	171	7
27797	XP1113		203	12
27797	XP6560		201	10
			202	11
			203	10
27797	XP6561		201	12
			201	12
			202	14
			203	11
27797	XP6569		201	9
			201	9
			202	12
			203	9
78500	X24-3276J-10	2530-01-394-8332	134	5
59197	X57-360.367	2530-01-372-4988	67	1
81348	ZZR765/03-001A7	9390-01-420-4560	78	12

CROSS REFERENCE INDEXES

PART NUMBER INDEX

FSCM	PART NUMBER	STOCK NUMBER	FIGURE NO	ITEM NO
35510	Z053-074979	5330-00-579-6495	47	32
35510	Z0930-78423	5310-01-120-6997	47	3
35510	Z095077721	3120-01-302-9301	47	39
64678	000084006134	5305-01-250-9209	194	10
29944	00041	5365-01-433-1005	201	14
		5365-01-433-1005	202	22
		5365-01-433-1005	203	17
64678	000933 006058	5305-01-299-4602	3	10
		5305-01-299-4602	43	16
		5305-01-299-4602	58	10
		5305-01-299-4602	69	33
		5305-01-299-4602	70	10
		5305-01-299-4602	73	1
		5305-01-299-4602	77	1
		5305-01-299-4602	148	12
		5305-01-299-4602	148	12
		5305-01-299-4602	199	8
		5305-01-299-4602	200	5
		5305-01-299-4602	264	10
64678	007349010003	5310-01-239-7188	30	5
		5310-01-239-7188	248	6
25281	024S9	4730-01-447-4312	161	9
25281	026S9	4730-01-434-2163	43	25
20076	03-18946-00	5306-01-369-8892	155	4
71468	031-0560-161	5935-01-148-4523	53	17
		5935-01-148-4523	75	2
25281	032S9	4730-01-447-4313	161	12
8R302	0384-5-78	9390-01-446-0572	268	14
20076	05-10058-00	2530-01-370-5530	155	1
20076	05-10107-00	2530-01-371-5836	155	6
20076	05-10110-00	2530-01-371-1488	155	2
25281	050S9	4730-01-436-2123	43	13
11083	061-8384	3030-01-423-6537	44	13
6V370	0636010109	5305-01-259-8683	252	30
0LEB5	0637 009 111	5310-01-423-3722	158	10
25281	065S9	4730-01-434-1983	41	4
		4730-01-434-1983	124	14
81495	071 310 24	5305-01-263-6154	127	3
81495	071 408 32	5306-01-266-7779	21	15
		5306-01-266-7779	26	28
		5306-01-266-7779	112	2
		5306-01-266-7779	124	4
		5306-01-266-7779	137	7
		5306-01-266-7779	139	10
		5306-01-266-7779	141	8
		5306-01-266-7779	142	5
		5306-01-266-7779	143	5
		5306-01-266-7779	144	3
		5306-01-266-7779	145	7
		5306-01-266-7779	147	8
		5306-01-266-7779	149	6
		5306-01-266-7779	181	2

CROSS REFERENCE INDEXES

PART NUMBER INDEX

FSCM	PART NUMBER	STOCK NUMBER	FIGURE NO	ITEM NO
		5306-01-266-7779	181	42
		5306-01-266-7779	196	7
		5306-01-266-7779	242	11
		5306-01-266-7779	247	3
		5306-01-266-7779	283	10
81495	071 410 36	5306-01-270-4217	36	34
		5306-01-270-4217	69	53
		5306-01-270-4217	119	15
		5306-01-270-4217	264	47
0LEB5	0770 002 068	5306-01-423-9937	158	8
		5306-01-423-9937	158	13
0LEB5	0770 020 013	4730-01-K65-0946	159	13
0LEB5	0770 023 003	5310-01-423-3725	158	9
		5310-01-423-3725	158	12
6V370	0770 032 935	5330-01-387-2165	162	3
24995	09288	5305-01-389-8022	46	45
30780	1-8MR0S	4730-00-247-9105	150	2
11083	1B5170	4730-01-022-6066	8	23
11083	1J9671	5330-00-613-6500	4	4
91929	1LS10	5930-00-126-0527	225	38
11083	1P8116	5330-01-066-0673	25	2
11083	1R0739	2940-00-029-0388	20	9
11083	1S2563	5340-01-148-6673	21	16
11083	1S7057	5330-00-105-0339	16	3
11083	1T1068	5330-01-336-8776	31	18
11083	1U6672	5120-01-373-3281	288	6
11083	1U6673	5120-01-372-4376	288	23
11083	1U6675	5120-01-372-4380	288	11
11083	1U6678	4910-01-360-8093	288	17
11083	1U6679	5210-01-366-4383	288	18
11083	1U6680	5180-01-356-8155	288	1
11083	1U6681	5120-01-372-3966	288	24
11083	1U7305	5120-01-372-3812	288	7
11083	1U7430	5120-01-362-2026	288	32
11083	1U7523	5120-01-372-2987	288	5
11083	1U7563	5120-01-291-3566	288	9
11083	1U7564	5120-01-289-6531	288	10
11083	1U7598	5120-01-362-2027	288	33
11083	1U8702	2910-01-360-6314	288	3
11083	1U8815	5210-01-372-3968	288	8
11083	1U9563	5120-01-372-4375	288	27
11083	1W2713	4820-01-360-4399	15	14
11083	1W2715	2815-01-361-8316	15	1
11083	1W8407	3120-01-350-6845	35	1
81343	1010 070120CA	4730-00-906-0721	252	20
77820	10-36675-18	5330-00-298-0190	281	9
81343	10-4 070102	4730-01-439-9884	139	37
81343	10-6 100102BA	4730-01-082-8799	139	4
81343	10-8 100202BA	4730-01-102-4123	138	23
		4730-01-102-4123	139	2
		4730-01-102-4123	285	8
81343	10-8-070320C	4730-01-384-6270	43	22

CROSS REFERENCE INDEXES

PART NUMBER INDEX

FSCM	PART NUMBER	STOCK NUMBER	FIGURE NO	ITEM NO
89619	10QH 310P1	2530-01-149-6787	157	1
89619	10QH39P1	2530-00-815-3175	157	3
78500	10X1563	5305-01-362-4399	129	24
		5305-01-362-4399	131	11
11083	100-4948		5	2
11083	100-6599	2815-01-361-6526	24	2
71643	100S	9320-00-324-5629	BULK	63
71643	100SX		213	6
			266	4
32498	1000B-1	5945-01-383-8377	55	3
51377	1002-07950-32	2990-01-393-7761	66	3
36378	1003292-07	5935-01-023-4871	52	17
06721	100696E	2940-01-213-1135	285	32
2E480	100760	6110-01-420-7840	52	68
		6110-01-420-7840	53	81
62380	101.660	7690-01-421-7857	260	30
62380	101.804	6150-01-395-2545	260	66
62380	101.830	4520-12-336-7642	260	26
28022	101-01156-03	5930-01-423-6887	66	1
29944	10113	5310-01-443-2558	202	21
		5310-01-443-2558	203	18
06852	101450	4820-01-439-7484	138	27
62380	101660	9905-01-397-7508	265	8
75535	1018892	4030-01-424-6542	253	16
11083	102-7459	5310-01-438-3539	32	2
0PFG7	10241	5310-01-416-3010	247	59
45225	10261	5310-00-725-7674	247	72
45225	10263	5310-00-725-7671	247	44
06721	102636-A		285	42
06721	102642		285	29
06721	102643		285	33
06721	102651	4730-01-367-9967	285	36
06721	102664A		285	30
18876	10280870		225	1
62380	103.512	4730-01-K62-5438	260	61
62380	104.012	5930-01-406-2359	260	76
82484	104.385	4820-01-375-3299	240	4
54225	10423	3110-01-299-8150	247	38
0PFG7	10442	5310-01-421-3089	247	37
45225	10445	5360-01-279-2215	247	36
74025	10476-103	5940-00-926-0085	52	52
		5940-00-926-0085	53	65
		5940-00-926-0085	79	6
		5940-00-926-0085	80	2
		5940-00-926-0085	81	2
		5940-00-926-0085	101	2
06721	1048011	2940-01-385-8931	135	3
		2940-01-385-8931	135	6
		2940-01-385-8931	136	10
		2940-01-385-8931	136	13
11083	105-1725	2815-01-399-0833	6	4
11083	105-1776	2815-01-434-5168	14	5

CROSS REFERENCE INDEXES

PART NUMBER INDEX

FSCM	PART NUMBER	STOCK NUMBER	FIGURE NO	ITEM NO
11083	105-1779	2815-01-424-6156	15	12
56161	10501380	5305-01-190-5705	127	93
56161	10501611	5305-01-157-1391	8	18
		5305-01-157-1391	8	29
56161	10501625	5310-01-155-5396	159	9
56161	10501757	5305-01-155-5439	260	69
		5305-01-155-5439	265	44
56161	10501759	5305-01-159-0065	66	13
		5305-01-159-0065	127	16
56161	10501882	5305-01-158-3212	127	98
56161	10503407	5305-01-163-1415	127	2
56161	10503516	5305-01-158-3206	194	8
56161	10503657	5305-01-158-0826	185	11
		5305-01-158-0826	189	36
		5305-01-158-0826	284	1
56161	10503770	5305-01-166-0615	102	14
		5305-01-166-0615	148	15
		5305-01-166-0615	148	15
56161	10503777	5305-01-166-0613	26	17
		5305-01-166-0613	204	2
56161	10503805	5305-01-178-7349	36	23
		5305-01-178-7349	41	36
		5305-01-178-7349	42	3
		5305-01-178-7349	48	1
		5305-01-178-7349	68	3
		5305-01-178-7349	69	19
		5305-01-178-7349	70	6
		5305-01-178-7349	77	12
		5305-01-178-7349	78	29
		5305-01-178-7349	102	3
		5305-01-178-7349	105	1
		5305-01-178-7349	106	1
		5305-01-178-7349	108	3
		5305-01-178-7349	148	1
		5305-01-178-7349	161	4
		5305-01-178-7349	183	8
		5305-01-178-7349	189	7
		5305-01-178-7349	189	22
		5305-01-178-7349	199	7
		5305-01-178-7349	200	14
		5305-01-178-7349	247	13
		5305-01-178-7349	250	11
		5305-01-178-7349	252	50
		5305-01-178-7349	257	41
		5305-01-178-7349	263	12
		5305-01-178-7349	268	28
		5305-01-178-7349	283	12
56161	10503847	5305-01-167-8107	141	13
56161	10504005	5305-01-158-0834	106	5
56161	10504502	5305-01-166-0616	243	1
		5305-01-166-0616	244	1
56161	10505582	5305-01-158-0793	78	6

CROSS REFERENCE INDEXES

PART NUMBER INDEX

FSCM	PART NUMBER	STOCK NUMBER	FIGURE NO	ITEM NO
		5305-01-158-0793	158	3
		5305-01-158-0793	258	5
		5305-01-158-0793	260	48
		5305-01-158-0793	265	69
56161	10524332	5305-01-158-2041	66	11
19207	105373		259	5
62380	106.082	6105-01-394-8589	260	36
82484	106.731	2540-01-377-3038	241	15
11873	10613-64004	2920-01-388-5637	52	51
		2920-01-388-5637	53	64
11083	107-7548	2815-01-432-0183	9	3
11083	107-7602	3120-01-399-1541	6	1
11083	107-7694	3040-01-361-2509	11	2
11083	107-7722	2815-01-398-9928	14	1
0TE27	1074X4	4730-01-375-3572	286	3
29944	10767	5305-01-420-3156	201	18
		5305-01-420-3156	202	20
		5305-01-420-3156	203	20
11083	1077749	4710-01-361-3984	29	9
11083	1077791	2815-01-361-2838	9	12
0SHR6	108P00002		222	10
			223	9
09990	108X4K	4730-01-418-9501	249	41
0PFG7	10807	5305-01-416-6662	247	79
19207	10890481	8105-00-477-3716	255	25
		8105-00-477-3716	256	28
62380	109.492		260	9
11083	109-2988	6680-01-433-1894	21	5
75418	1090-08000-01	2930-01-331-6660	45	5
51377	1090-08000-03	2930-01-362-1098	45	5
19207	10938443-1	5310-00-141-0447	155	12
19207	10938443-2	5310-00-480-7606	155	12
19207	10938444-1	5310-00-176-6525	155	23
19207	10938444-2	5310-00-176-6521	155	23
19207	10942521	5940-00-738-6272	69	27
0PFG7	10970	4730-01-416-6798	247	71
50153	11M011	2530-01-095-3561	134	3
62445	110 7289	5310-01-246-1387	176	4
		5310-01-246-1387	185	17
71468	110-238-0446	5999-01-385-8325	52	14
		5999-01-385-8325	53	14
0SHR6	110F00614		222	1
0SHR6	110F00940		223	1
0SHR6	110F00966		219	33
71468	110238-0195	5315-01-156-6314	52	8
		5315-01-156-6314	53	8
		5315-01-156-6314	71	11
		5315-01-156-6314	73	6
		5315-01-156-6314	76	3
		5315-01-156-6314	77	11
		5315-01-156-6314	81	6
		5315-01-156-6314	82	2

CROSS REFERENCE INDEXES

PART NUMBER INDEX

FSCM	PART NUMBER	STOCK NUMBER	FIGURE NO	ITEM NO
		5315-01-156-6314	83	2
		5315-01-156-6314	84	14
		5315-01-156-6314	85	12
		5315-01-156-6314	86	14
		5315-01-156-6314	87	6
		5315-01-156-6314	90	4
		5315-01-156-6314	104	9
0PFG7	11034	5325-01-416-3098	247	68
0PFG7	11048	4730-01-416-6800	247	83
24995	11089	6160-01-442-9795	69	35
62445	111 2290	5306-01-281-0554	122	13
62380	111.372	4710-01-350-7835	265	35
62380	111.375	4710-12-325-1896	260	94
0PFG7	11151	5305-01-416-6664	247	24
11083	113-6250	5330-01-360-5933	23	9
62445	1131132	5310-01-288-1429	272	8
11083	1136200	5330-01-424-3523	24	1
11083	114-8718	5330-01-348-2720	25	3
11139	114017	5935-01-174-1235	53	45
13841	11446	5330-00-247-4174	247	62
58864	11486	5310-01-223-7136	237	29
11083	115-4109	5330-01-361-1456	6	9
11083	115-4165	2815-01-434-5169	4	7
11083	115-4202		17	10
11083	115-4204	3020-01-433-8134	44	16
24995	11500137	6160-01-433-5002	69	32
72582	11500725	5305-01-129-6705	127	35
73342	11505232	5305-01-360-2038	8	20
		5305-01-360-2038	8	32
73342	11505242	5305-01-360-1137	113	1
73342	11505328	5305-01-360-1136	120	2
73342	11506706	5320-01-360-0925	120	4
73342	11513011	5315-01-360-4772	122	74
73342	11515190	5306-01-360-2033	119	17
73342	11515310	5306-01-359-9429	122	2
73342	11515315	5305-01-359-8003	122	52
73342	11515355	5305-01-388-2091	120	19
73342	11515371	5306-01-362-4444	119	14
73342	11515393	5305-01-424-0075	8	25
73342	11515469	5305-01-359-9445	119	9
4Y355	115200860015	5340-01-375-7249	240	8
11083	1154232	4710-01-361-2533	29	23
92489	11557-3	5340-01-434-1338	69	54
11083	1158543	3040-01-434-8709	31	30
27647	1159	5325-01-397-0332	276	19
0EJ14	11603	2530-01-251-5296	237	15
19207	11621436-3	5365-01-031-8183	23	5
		5365-01-031-8183	44	3
19207	11630529	1095-00-763-7348	284	3
19207	11630581	5340-00-455-5899	284	4
19207	11630594	2590-00-264-8828	284	5
19207	11639519-1	4330-00-463-0200	65	6

CROSS REFERENCE INDEXES

PART NUMBER INDEX

FSCM	PART NUMBER	STOCK NUMBER	FIGURE NO	ITEM NO
19207	11639519-2	5330-00-462-0907	60	9
19207	11639520	6220-01-067-4717	60	4
19207	11639535	6220-00-179-4324	60	13
19207	11639537	6220-01-108-5105	60	20
19207	11639538-1	6220-01-210-3225	60	18
5A910	11639538-2	6220-01-354-5261	65	9
19207	11639546	6220-00-179-4325	65	7
19207	11643398	9905-00-198-2728	246	7
19207	11649930	5310-00-402-5220	46	28
		5310-00-402-5220	273	41
19207	11668979	5310-01-100-2067	64	6
19207	11682088-1	5340-01-114-7712	270	25
34495	11840	5340-01-367-9135	277	11
45225	11863-012	5330-01-417-7795	247	40
11083	119-2924	4320-01-360-9221	17	1
11083	119-2940	5330-01-424-7905	13	4
11083	119-2960	2815-01-434-5171	13	3
11083	119-3036		15	4
11083	119-3061	2815-01-362-1159	15	9
11083	119-3075	6685-01-438-6660	43	5
0SHR6	119S00003		222	38
0EJ14	11954	2520-01-344-9376	237	13
0EJ14	11969	5306-01-346-5613	237	16
78500	119-B-3226	4730-01-082-3178	129	2
78500	1199R2176	5315-00-880-6027	130	38
		5315-00-880-6027	132	38
81343	12-12 430160C	4730-01-383-5786	264	31
81343	12-12 430220C	4730-01-381-8286	257	35
81343	12-12 430260B	4730-01-168-1906	264	33
81343	12-12 430360CA	4730-01-381-8927	154	12
		4730-01-381-8927	257	16
81343	12-16 430160C	4730-01-383-5173	257	4
94135	12Z5056-35	5315-00-234-1861	149	24
71468	120-1809-000	5935-01-152-6814	70	11
		5935-01-152-6814	245	32
71468	120-1870-000	5935-01-153-8291	73	7
71468	120-1873-000	5935-01-153-7519	84	16
		5935-01-153-7519	85	11
71468	120-1874-000	5935-01-155-7718	77	9
11862	12004007	5920-01-123-5211	106	8
77060	12010293	5975-01-226-8078	87	14
77060	1203 4398	5935-01-336-6408	52	46
77060	12040753	5935-01-319-2334	86	21
77060	12048074	5940-01-366-1563	52	42
		5940-01-366-1563	53	52
78500	1205-B-2004	5330-01-292-9573	133	11
		5330-01-292-9573	134	13
78500	1205-C-2005	5330-01-271-9347	133	4
		5330-01-271-9347	134	8
78500	1205F2164	5330-01-362-3392	129	17
77060	12059168	5935-01-365-1035	52	43
		5935-01-365-1035	53	53

CROSS REFERENCE INDEXES

PART NUMBER INDEX

FSCM	PART NUMBER	STOCK NUMBER	FIGURE NO	ITEM NO
13445	12080	5935-01-372-1986	77	5
27618	12084P11	5310-00-274-8041	8	31
0EJ14	12088	2520-01-346-0053	237	23
73342	12092196	5340-01-359-8809	120	20
77060	12103881	5940-01-370-5059	52	47
		5940-01-370-5059	86	20
		5940-01-370-5059	87	12
30327	122B1-2X1-2	4730-00-595-3108	138	10
78500	1225K1259	3120-01-362-4365	129	19
78500	1225K817	3120-01-131-2083	129	14
		3120-01-131-2083	129	59
19207	12258937-1	6625-01-169-2437	58	11
19207	12258940-4	5935-01-154-6233	52	9
		5935-01-154-6233	53	9
		5935-01-154-6233	71	16
		5935-01-154-6233	104	8
19207	12258943	5935-01-114-5354	78	28
19207	12269868	4020-01-092-0331	69	22
78500	1227E1487	5310-01-391-5248	133	8
		5310-01-391-5248	134	15
19207	12277381	5340-01-128-9558	35	2
78500	1228H1152	3120-01-362-4366	129	51
		3120-01-362-4366	131	38
78500	1228J1154	3120-01-362-4370	129	27
		3120-01-362-4370	131	14
78500	1228K1155	3120-01-362-4367	129	48
		3120-01-362-4367	131	35
19207	12287561-1	5306-01-083-5536	64	10
78500	1229-C-1511	5310-01-325-7280	130	2
		5310-01-325-7280	130	17
		5310-01-325-7280	132	2
		5310-01-325-7280	132	17
78500	1229-M-1625	5310-01-059-7130	129	4
78500	1229-S-513-C	5310-01-062-3384	133	17
		5310-01-062-3384	134	23
78500	1229-T-4570	3120-01-391-2219	129	13
		3120-01-391-2219	129	58
78500	1229-Y-1507	5310-01-205-2830	129	61
		5310-01-205-2830	131	6
78500	1229A4161	3120-01-362-4371	129	26
		3120-01-362-4371	131	13
78500	1229C1121	5325-01-362-4998	131	3
78500	1229G4401	5310-01-363-7164	130	36
		5310-01-363-7164	132	36
78500	1229K3131	5325-01-362-6127	129	36
		5325-01-362-6127	131	23
78500	1229K4119	3120-01-392-4364	129	18
78500	1229L4276	3120-01-362-4363	130	12
		3120-01-362-4363	132	12
78500	1229W4157	3120-01-362-4369	129	47
		3120-01-362-4369	131	34
78500	1229X4106	3120-01-362-4362	130	10

CROSS REFERENCE INDEXES

PART NUMBER INDEX

FSCM	PART NUMBER	STOCK NUMBER	FIGURE NO	ITEM NO
78500	1229Z4160	3120-01-362-4362	132	10
		3120-01-362-4368	129	49
		3120-01-362-4368	131	36
19207	12301125	5310-01-210-0199	155	7
11862	12337902	5305-01-251-1626	113	2
		5305-01-251-1626	117	2
		5305-01-251-1626	120	17
		5305-01-251-1626	125	3
19207	12338078	2520-01-268-1051	255	8
		2520-01-268-1051	256	8
19207	12340917	7690-01-256-4909	246	3
19207	12342303	6150-01-317-5853	69	20
19207	12342306	5340-01-315-7223	69	23
19207	12357896	6695-01-326-4706	60	19
		6695-01-326-4706	65	10
19207	12357897	6220-01-319-5509	60	17
		6220-01-319-5509	65	8
19207	12360840-2		64	4
19207	12360850-2	6220-01-387-4250	60	10
5A910	12360865-1	6220-01-354-1221	65	17
19207	12360870-1	6220-01-293-2627	60	8
19207	12360910-2	6220-01-364-1671	64	1
19207	12360911		64	5
34623	12360912	6220-01-411-3584	64	2
0EJ14	12375	3020-01-375-1522	237	50
0EJ14	12376	3040-01-374-5548	237	17
0EJ14	12377	2530-01-345-0815	237	26
19207	12378369-003	4710-01-370-4818	28	13
0FW39	12378442	2510-01-372-1556	50	2
0FW39	12378442-001		50	2
19207	12378452	2510-01-383-2372	51	4
		2510-01-383-2372	257	50
19207	12378453	2510-01-385-8887	51	1
		2510-01-385-8887	257	48
19207	12378483	2510-01-395-7278	207	1
0FW39	12378484	2510-01-375-1900	206	1
0FW39	12378502	6150-01-373-8336	73	4
19207	12378618-004	5930-01-372-2263	50	36
19207	12378618-005	5930-01-372-2261	50	52
19207	12378618-006	5930-01-372-2264	50	40
19207	12378618-007	5930-01-372-2262	50	32
0FW39	12378618-008	5895-01-443-0848	51	20
19207	12378618-009	5930-01-K64-0241	51	12
19207	12378618-011	5930-01-K64-6314	51	8
19207	12378618-023	7690-01-433-1895	50	48
19207	12378620-001	5930-01-372-5385	50	43
		5930-01-372-5385	50	47
19207	12378620-002	5930-01-381-7489	50	31
		5930-01-381-7489	50	35
		5930-01-381-7489	50	39
		5930-01-381-7489	50	51
		5930-01-381-7489	51	9

CROSS REFERENCE INDEXES

PART NUMBER INDEX

FSCM	PART NUMBER	STOCK NUMBER	FIGURE NO	ITEM NO
		5930-01-381-7489	51	13
		5930-01-381-7489	51	21
		5930-01-381-7489	257	53
		5930-01-381-7489	257	58
19207	12378685-001	6150-01-376-7889	103	1
19207	12378750	5340-01-384-9527	149	5
19207	12378753	5360-01-386-6087	158	6
0FW39	12378759	5365-01-374-9853	190	2
19207	12378772	5340-01-370-7166	179	8
19207	12378774	5306-01-371-0876	174	6
19207	12378784	6110-01-376-2260	57	9
19207	12378796	6625-01-383-2558	50	17
0FW39	12378798-002	6620-01-376-3744	50	20
19207	12378806		179	12
0FW39	12378865-001		30	15
67049	12378882-004		41	1
19207	12378887	2590-01-384-0894	124	8
19207	12378889-001	4710-01-377-6616	161	8
19207	12378893	5340-01-372-5693	41	9
0FW39	12378898	2590-01-373-6358	41	14
19207	12412478-04	5310-01-381-9901	69	3
		5310-01-381-9901	69	48
19207	12414243	5930-01-384-9598	151	6
19207	12414256	8145-01-413-8521	256	1
19207	12414260-002	5935-01-375-0563	52	11
		5935-01-375-0563	53	11
19207	12414262	5935-01-388-7318	52	67
		5935-01-388-7318	53	84
19207	12414270-001	5945-01-360-3099	52	77
		5945-01-360-3099	53	92
19207	12414270-002	5945-01-360-6118	52	80
		5945-01-360-6118	53	95
19207	12414285	2510-01-374-2429	2	9
19207	12414286	2590-01-363-7325	3	8
19207	12414287	2510-01-365-8977	3	6
19207	12414289-001	2510-01-389-9627	2	4
19207	12414290-001	2510-01-390-1448	2	2
0FW39	12414306-001	2590-01-443-2208	46	53
19207	12414307-014	5306-01-386-9065	268	42
19207	12414307-016	5306-01-385-7034	252	47
19207	12414307-023	5306-01-374-1078	28	15
		5306-01-374-1078	35	1
		5306-01-374-1078	40	1
		5306-01-374-1078	195	17
		5306-01-374-1078	254	6
		5306-01-374-1078	264	28
19207	12414307-024	5306-01-384-3431	35	5
		5306-01-384-3431	191	5
		5306-01-384-3431	195	19
19207	12414307-025	5306-01-385-6980	191	1
		5306-01-385-6980	195	1
		5306-01-385-6980	264	16

CROSS REFERENCE INDEXES

PART NUMBER INDEX

FSCM	PART NUMBER	STOCK NUMBER	FIGURE NO	ITEM NO
19207	12414307-035	5306-01-369-6095	41	10
		5306-01-369-6095	212	7
19207	12414307-037	5306-01-330-8490	2	13
		5306-01-330-8490	28	8
		5306-01-330-8490	168	8
		5306-01-330-8490	204	1
		5306-01-330-8490	249	13
		5306-01-330-8490	272	3
19207	12414307-038		168	3
19207	12414307-039	5305-01-395-0143	204	4
		5305-01-395-0143	207	6
19207	12414307-040		268	39
19207	12414307-049	5306-01-377-0771	26	45
19207	12414307-050	5306-01-377-0852	26	40
19207	12414307-062	5306-01-377-0960	167	12
19207	12414307-063	5306-01-369-8191	26	36
		5306-01-369-8191	39	1
		5306-01-369-8191	41	13
		5306-01-369-8191	167	7
		5306-01-369-8191	247	12
19207	12414307-064	5306-01-369-0765	39	1
		5306-01-369-0765	41	33
		5306-01-369-0765	148	10
		5306-01-369-0765	161	2
		5306-01-369-0765	162	10
		5306-01-369-0765	165	2
		5306-01-369-0765	165	2
		5306-01-369-0765	172	3
		5306-01-369-0765	189	23
		5306-01-369-0765	238	12
19207	12414307-065	5306-01-382-5054	47	50
19207	12414307-066	5306-01-377-1072	167	5
		5306-01-377-1072	238	40
19207	12414307-069	5306-01-387-6046	254	3
		5306-01-387-6046	257	8
19207	12414307-070	5306-01-389-0139	172	12
19207	12414307-077	5305-01-374-1086	111	4
		5305-01-374-1086	167	14
19207	12414307-078	5306-01-369-8193	2	6
		5306-01-369-8193	102	7
		5306-01-369-8193	188	29
19207	12414307-079	5306-01-381-9941	2	7
		5306-01-381-9941	174	7
		5306-01-381-9941	177	13
		5306-01-381-9941	206	4
		5306-01-381-9941	238	2
19207	12414307-080	5306-01-381-9928	177	14
19207	12414307-081	5306-01-371-7162	172	6
19207	12414307-087	5306-01-387-8001	2	14
19207	12414307-088	5305-01-373-4832	179	7
		5305-01-373-4832	238	26
19207	12414307-092	5306-01-389-0093	30	11

CROSS REFERENCE INDEXES

PART NUMBER INDEX

FSCM	PART NUMBER	STOCK NUMBER	FIGURE NO	ITEM NO
19207	12414307-138	5306-01-372-0786	30	1
		5306-01-372-0786	164	25
		5306-01-372-0786	167	2
		5306-01-372-0786	173	9
		5306-01-372-0786	176	1
		5306-01-372-0786	254	8
		5306-01-372-0786	264	2
19207	12414307-139	5306-01-386-7853	164	36
		5306-01-386-7853	164	44
19207	12414307-140	5306-01-372-3536	41	8
		5306-01-372-3536	159	2
		5306-01-372-3536	163	16
		5306-01-372-3536	163	38
		5306-01-372-3536	164	16
		5306-01-372-3536	164	46
		5306-01-372-3536	165	2
		5306-01-372-3536	172	14
		5306-01-372-3536	207	9
		5306-01-372-3536	254	10
19207	12414307-141	5306-01-371-7161	111	7
		5306-01-371-7161	163	31
		5306-01-371-7161	164	32
		5306-01-371-7161	172	19
		5306-01-371-7161	237	6
19207	12414307-142	5306-01-372-3537	164	21
		5306-01-372-3537	171	5
19207	12414307-143	5306-01-372-0787	30	3
		5306-01-372-0787	163	15
		5306-01-372-0787	164	35
		5306-01-372-0787	172	14
		5306-01-372-0787	237	5
19207	12414307-144	5306-01-387-0075	159	3
19207	12414307-145	5306-01-386-3966	69	15
		5306-01-386-3966	173	1
19207	12414307-146	5306-01-381-9797	159	4
		5306-01-381-9797	163	11
		5306-01-381-9797	167	1
		5306-01-381-9797	238	24
19207	12414307-147	5306-01-377-0750	163	27
		5306-01-377-0750	164	36
		5306-01-377-0750	173	10
19207	12414307-149	5306-01-384-3485	111	3
		5306-01-384-3485	167	17
		5306-01-384-3485	172	13
		5306-01-384-3485	173	25
		5306-01-384-3485	254	9
19207	12414307-150	5306-01-390-1141	30	4
		5306-01-390-1141	164	39
		5306-01-390-1141	172	13
19207	12414307-151	5306-01-389-0076	69	24
19207	12414307-173	5306-01-382-7538	159	1
		5306-01-382-7538	163	5

CROSS REFERENCE INDEXES

PART NUMBER INDEX

FSCM	PART NUMBER	STOCK NUMBER	FIGURE NO	ITEM NO
		5306-01-382-7538	164	7
19207	12414307-174	5306-01-387-0097	166	11
19207	12414307-194	5305-01-374-1087	2	1
19207	12414308-002	5310-01-381-9819	26	51
		5310-01-381-9819	41	38
		5310-01-381-9819	58	9
		5310-01-381-9819	139	14
		5310-01-381-9819	148	7
		5310-01-381-9819	161	3
		5310-01-381-9819	189	1
		5310-01-381-9819	247	16
		5310-01-381-9819	252	54
		5310-01-381-9819	257	37
		5310-01-381-9819	258	31
		5310-01-381-9819	264	11
		5310-01-381-9819	268	29
19207	12414308-004	5310-01-369-5703	168	2
		5310-01-369-5703	257	11
		5310-01-369-5703	268	43
19207	12414308-005	5310-01-390-9049	257	21
19207	12414308-007	5310-01-369-6073	46	61
		5310-01-369-6073	102	4
		5310-01-369-6073	174	2
		5310-01-369-6073	177	12
		5310-01-369-6073	206	5
19207	12414308-016	5310-01-381-9945	272	33
19207	12414308-017	5310-01-381-9830	28	11
		5310-01-381-9830	35	6
		5310-01-381-9830	40	2
		5310-01-381-9830	102	11
		5310-01-381-9830	147	1
		5310-01-381-9830	191	3
		5310-01-381-9830	195	7
		5310-01-381-9830	254	4
19207	12414308-018	5310-01-369-3337	2	15
		5310-01-369-3337	204	13
		5310-01-369-3337	249	18
		5310-01-369-3337	252	31
		5310-01-369-3337	268	24
		5310-01-369-3337	272	27
19207	12414308-019	5310-01-369-9522	26	41
		5310-01-369-9522	30	10
		5310-01-369-9522	38	7
		5310-01-369-9522	39	3
		5310-01-369-9522	40	11
		5310-01-369-9522	41	7
		5310-01-369-9522	41	34
		5310-01-369-9522	148	6
		5310-01-369-9522	161	7
		5310-01-369-9522	162	9
		5310-01-369-9522	165	4
		5310-01-369-9522	165	4

CROSS REFERENCE INDEXES

PART NUMBER INDEX

FSCM	PART NUMBER	STOCK NUMBER	FIGURE NO	ITEM NO
		5310-01-369-9522	167	9
		5310-01-369-9522	172	4
		5310-01-369-9522	172	4
		5310-01-369-9522	189	31
		5310-01-369-9522	238	10
		5310-01-369-9522	247	14
		5310-01-369-9522	254	5
19207	12414308-020	5310-01-381-9849	26	42
		5310-01-381-9849	26	42
19207	12414308-021	5310-01-369-3338	2	8
		5310-01-369-3338	102	8
		5310-01-369-3338	167	16
		5310-01-369-3338	172	10
		5310-01-369-3338	179	9
		5310-01-369-3338	188	36
		5310-01-369-3338	238	1
		5310-01-369-3338	253	10
19207	12414308-022	5310-01-417-1262	189	19
		5310-01-417-1262	282	8
19207	12414308-025	5310-01-369-6706	30	28
		5310-01-369-6706	41	6
		5310-01-369-6706	69	16
		5310-01-369-6706	111	6
		5310-01-369-6706	159	5
		5310-01-369-6706	163	1
		5310-01-369-6706	163	37
		5310-01-369-6706	164	2
		5310-01-369-6706	164	42
		5310-01-369-6706	165	4
		5310-01-369-6706	167	4
		5310-01-369-6706	171	3
		5310-01-369-6706	172	15
		5310-01-369-6706	172	17
		5310-01-369-6706	173	3
		5310-01-369-6706	176	2
		5310-01-369-6706	177	1
		5310-01-369-6706	178	4
		5310-01-369-6706	207	10
		5310-01-369-6706	237	1
		5310-01-369-6706	238	22
		5310-01-369-6706	254	7
19207	12414308-027	5310-01-369-3339	163	4
		5310-01-369-3339	164	6
		5310-01-369-3339	166	10
		5310-01-369-3339	177	8
		5310-01-369-3339	179	4
19207	12414309-022	5305-01-385-0754	153	18
		5305-01-385-0754	257	44
19207	12414309-034	5305-01-389-7009	252	34
19207	12414309-046	5306-01-387-3083	238	28
19207	12414309-048	5306-01-K62-5199	140	7
19207	12414310-014	5305-01-375-2860	194	15

CROSS REFERENCE INDEXES

PART NUMBER INDEX

FSCM	PART NUMBER	STOCK NUMBER	FIGURE NO	ITEM NO
19207	12414310-026		182	17
			266	12
19207	12414310-033	5305-12-142-5728	182	10
19207	12414310-044	5305-01-384-3487	57	10
		5305-01-384-3487	182	22
19207	12414310-046	5305-01-374-5394	182	2
		5305-01-374-5394	182	2
		5305-01-374-5394	194	4
		5305-01-374-5394	194	4
		5305-01-374-5394	198	2
19207	12414310-048	5305-01-375-7158	183	7
		5305-01-375-7158	185	9
		5305-01-375-7158	199	3
19207	12414314-004	5310-01-389-8037	252	51
19207	12414315-002	5310-01-374-1381	62	1
		5310-01-374-1381	67	2
		5310-01-374-1381	102	16
		5310-01-374-1381	186	3
19207	12414315-003	5310-01-374-1382	58	8
		5310-01-374-1382	243	3
		5310-01-374-1382	244	3
		5310-01-374-1382	263	18
		5310-01-374-1382	272	10
19207	12414315-006	5310-01-369-3332	21	11
		5310-01-369-3332	46	56
		5310-01-369-3332	78	8
		5310-01-369-3332	112	3
		5310-01-369-3332	124	2
		5310-01-369-3332	137	1
		5310-01-369-3332	139	9
		5310-01-369-3332	140	4
		5310-01-369-3332	141	6
		5310-01-369-3332	142	11
		5310-01-369-3332	143	11
		5310-01-369-3332	144	6
		5310-01-369-3332	145	9
		5310-01-369-3332	147	9
		5310-01-369-3332	149	2
		5310-01-369-3332	151	11
		5310-01-369-3332	152	7
		5310-01-369-3332	172	17
		5310-01-369-3332	196	3
		5310-01-369-3332	242	6
		5310-01-369-3332	252	26
19207	12414315-009	5310-01-365-7236	36	17
		5310-01-365-7236	40	12
		5310-01-365-7236	63	6
		5310-01-365-7236	189	44
		5310-01-365-7236	238	31
		5310-01-365-7236	247	5
		5310-01-365-7236	264	43
		5310-01-365-7236	285	10

CROSS REFERENCE INDEXES

PART NUMBER INDEX

FSCM	PART NUMBER	STOCK NUMBER	FIGURE NO	ITEM NO
19207	12414315-011	5310-01-368-8667	173	6
		5310-01-368-8667	175	9
		5310-01-368-8667	238	35
19207	12414315-012	5310-01-369-3331	40	4
		5310-01-369-3331	138	30
		5310-01-369-3331	140	12
19207	12414315-017	5310-01-368-8065	188	4
19207	12414315-020	5310-01-372-6337	188	15
19207	12414315-021	5310-01-434-3778	178	7
19207	12414319-024	5305-01-389-7965	181	10
		5305-01-389-7965	181	41
19207	12414319-026	5305-01-374-2294	181	9
		5305-01-374-2294	181	37
78385	12414334-001	2520-01-361-8237	124	18
19207	12414337	5340-01-362-4582	46	57
19207	12414341	2920-01-362-5734	272	37
19207	12414341-001	5340-01-444-2639	46	52
0FW39	12414355-001	2510-01-436-1359	194	25
0FW39	12414355-002	2510-01-363-2562	194	14
0FW39	12414356-001	2510-01-364-1626	193	9
0FW39	12414357	2510-01-372-4839	177	9
		2510-01-372-4839	178	3
0FW39	12414360	2510-01-365-7152	192	9
0FW39	12414366-001		285	15
0FW39	12414369-001	4310-01-372-4220	138	5
19207	12414369-002	4310-01-372-5070	138	2
0FW39	12414373	3040-01-389-7019	160	9
19207	12414374	5340-01-362-6229	7	16
19207	12414377	2920-01-363-2525	7	14
0FW39	12414381-001	4710-01-370-4819	124	16
19207	12414388	5340-01-361-7907	154	2
19207	12414397	8145-01-413-8516	255	1
0FW39	12414398-003	2815-01-419-0222	1	1
19207	12414401	2510-01-364-5702	3	14
0FW39	12414411-004	2530-01-439-7482	141	5
19207	12414419-039	5305-01-386-7845	51	5
		5305-01-386-7845	205	3
		5305-01-386-7845	205	15
		5305-01-386-7845	257	55
19207	12414419-040	5305-01-387-6195	50	26
19207	12414419-042	5305-01-372-1266	50	57
		5305-01-372-1266	61	10
		5305-01-372-1266	78	4
		5305-01-372-1266	105	5
19207	12414419-045	5305-01-387-3059	62	9
19207	12414419-054	5305-01-382-4111	51	2
		5305-01-382-4111	56	1
		5305-01-382-4111	257	49
19207	1241414419-055	5305-01-387-2156	56	2
		5305-01-387-2156	249	16
0FW39	12414419-056	5305-01-375-2855	182	26
		5305-01-375-2855	186	21

CROSS REFERENCE INDEXES

PART NUMBER INDEX

FSCM	PART NUMBER	STOCK NUMBER	FIGURE NO	ITEM NO
		5305-01-375-2855	246	20
19207	12414419-058	5305-01-375-2856	58	6
		5305-01-375-2856	187	4
		5305-01-375-2856	189	33
19207	12414419-077		190	1
19207	12414419-080	5305-01-268-9100	102	18
		5305-01-268-9100	148	22
19207	12414419-081	5305-01-395-0138	139	17
19207	12414419-089	5305-01-386-3501	253	22
19207	12414419-093	5306-01-266-7779	249	2
19207	12414419-095	5305-01-K63-8222	249	6
19207	12414419-097	5305-01-441-3346	21	15
19207	12414419-104	5305-01-334-9657	140	11
19207	12414419-106	5305-01-394-9284	37	7
19207	12414419-109	5305-01-389-1253	26	17
19207	12414419-112	5305-01-362-9797	7	11
		5305-01-362-9797	63	3
		5305-01-362-9797	154	6
		5305-01-362-9797	188	28
0FW39	12414419-117	5305-01-K64-4066	172	37
19207	12414419-128	5305-01-377-0696	195	15
19207	12414419-135	5305-01-231-7406	189	28
19207	12414419-136	5305-01-387-6177	40	3
		5305-01-387-6177	138	39
		5305-01-387-6177	189	32
		5305-01-387-6177	283	2
19207	12414419-459		181	44
19207	12414420-002	5340-01-388-9103	155	10
19207	12414420-004	5310-01-370-0010	155	11
0FW39	12414424	4720-01-370-0263	28	9
0FW39	12414432	5340-01-365-8143	3	9
19207	12414435-003	4710-01-362-5600	43	15
19207	12414437	4710-01-384-6229	124	21
0FW39	12414438-003	2520-01-418-9010	110	1
19207	12414442	4710-01-384-6214	21	9
19207	12414449-001	4710-01-363-2597	43	27
19207	12414450-001	4710-01-390-4471	43	30
19207	12414454-001	5340-01-378-0022	138	1
19207	12414454-002	5340-01-378-0021	138	3
19207	12414461	5340-01-384-0746	21	12
19207	12414463-001	4710-01-362-5599	43	31
0FW39	12414473-001		245	4
19207	12414473-008		182	16
19207	12414473-009	5310-01-384-1977	50	27
19207	12414473-010	5310-01-374-6990	69	4
		5310-01-374-6990	69	47
		5310-01-374-6990	198	1
		5310-01-374-6990	263	17
		5310-01-374-6990	284	2
19207	12414473-011		108	2
			190	5
19207	12414473-014	5310-01-363-0740	7	12

CROSS REFERENCE INDEXES

PART NUMBER INDEX

FSCM	PART NUMBER	STOCK NUMBER	FIGURE NO	ITEM NO
		5310-01-363-0740	26	18
		5310-01-363-0740	34	12
		5310-01-363-0740	36	18
		5310-01-363-0740	69	39
		5310-01-363-0740	154	5
		5310-01-363-0740	189	41
		5310-01-363-0740	191	10
		5310-01-363-0740	195	2
		5310-01-363-0740	204	3
		5310-01-363-0740	257	7
		5310-01-363-0740	264	42
		5310-01-363-0740	285	11
19207	12414473-016	5310-01-375-0659	46	58
		5310-01-375-0659	188	1
19207	12414473-020	5310-01-369-8923	177	7
		5310-01-369-8923	178	6
19207	12414474-008	5310-01-064-3613	205	5
		5310-01-064-3613	205	11
19207	12414474-009	5310-01-378-3135	185	23
		5310-01-378-3135	187	1
		5310-01-378-3135	246	23
19207	12414474-010	5310-01-370-7447	36	11
		5310-01-370-7447	36	33
		5310-01-370-7447	57	7
		5310-01-370-7447	78	13
		5310-01-370-7447	181	17
		5310-01-370-7447	181	31
		5310-01-370-7447	182	28
		5310-01-370-7447	186	15
		5310-01-370-7447	205	13
		5310-01-370-7447	263	10
19207	12414474-011	5310-01-370-4879	191	13
		5310-01-363-4879	195	11
		5310-01-363-4879	263	6
19207	12414474-014	5310-01-369-8654	174	4
		5310-01-369-8654	191	11
19207	12414474-015	5310-01-363-4881	69	40
		5310-01-363-4881	195	10
		5310-01-363-4881	257	29
19207	12414474-017	5310-01-370-9104	176	3
19207	12414474-018	5310-01-376-0488	188	35
19207	12414474-019	5310-01-384-2526	264	4
19207	12414474-023	5310-01-395-0816	207	17
19207	12414475-059	5305-01-439-4830	272	14
19207	12414475-068	5305-01-374-1790	181	26
		5305-01-374-1790	242	10
19207	12414475-081	5305-01-374-1787	185	15
19207	12414475-087	5305-01-369-7507	155	29
19207	12414475-115	5305-01-372-4711	188	7
19207	12414475-125	5305-01-372-4712	188	10
19207	12414475-131	5305-01-363-0703	40	7
19207	12414502	4720-01-363-2320	26	32

CROSS REFERENCE INDEXES

PART NUMBER INDEX

FSCM	PART NUMBER	STOCK NUMBER	FIGURE NO	ITEM NO
19207	12414504-001	4710-01-390-5716	154	11
0FW39	12414510	2510-01-377-6603	163	18
		2510-01-377-6603	164	17
19207	12414511	2510-01-377-3124	163	21
		2510-01-377-3124	164	24
19207	12414512	2590-01-426-2347	163	34
		2590-01-426-2347	164	23
19207	12414551-010	5306-01-439-0022	147	6
19207	12414551-052	5306-01-369-7504	173	2
		5306-01-369-7504	175	8
19207	12414551-124	5306-01-369-8192	177	4
		5306-01-369-8192	179	13
		5306-01-369-8192	188	23
19207	12414551-126	5305-01-369-3264	179	10
19207	12414551-133	5306-01-434-0875	178	5
19207	12414553-002	4720-01-439-5077	43	17
19207	12414554-001	4710-01-363-2594	43	37
19207	12414555-001	4710-01-363-2596	43	24
19207	12414556	5905-01-407-0037	66	7
19207	12414559-021	5310-01-374-4517	36	8
19207	12414560-011	5310-01-421-9556	58	7
		5310-01-421-9556	246	21
19207	12414560-013	5310-12-319-0394	69	18
19207	12414560-014	5310-01-384-0162	26	50
19207	12414560-018	5310-01-381-3281	158	23
		5310-01-381-3281	241	12
		5310-01-381-3281	241	12
		5310-01-381-3281	247	9
19207	12414560-019	5310-01-369-6074	172	38
		5310-01-369-6074	174	3
19207	12414560-021	5310-01-442-1717	35	7
19207	12414560-029	5310-01-395-0817	207	18
19207	12414566-001	5305-01-362-9796	2	3
		5305-01-362-9796	3	7
		5305-01-362-9796	46	59
19207	12414566-002	5305-01-362-9795	3	5
19207	12414570-012	5310-01-382-7024	258	4
19207	12414570-013	5310-01-374-4515	60	1
		5310-01-374-4515	77	2
19207	12414570-015	5310-01-388-2043	68	4
		5310-01-388-2043	102	17
		5310-01-388-2043	148	14
19207	12414570-021	5310-01-374-4516	63	4
		5310-01-374-4516	102	12
0FW39	12414572-004	2990-01-363-2469	38	9
19207	12414575-047		200	1
19207	12414576-169	5307-01-390-1878	46	55
19207	12414577	2510-01-377-6604	163	39
		2510-01-377-6604	164	47
19207	12414578	5340-04-372-0145	140	5
0FW39	12414579-001	5340-01-448-0474	254	2
0FW39	12414582-004	5365-01-377-1995	180	5

CROSS REFERENCE INDEXES

PART NUMBER INDEX

FSCM	PART NUMBER	STOCK NUMBER	FIGURE NO	ITEM NO
		5365-01-377-1995	181	3
		5365-01-377-1995	181	45
		5365-01-377-1995	196	4
		5365-01-377-1995	283	7
19207	12414582-006	5310-01-372-5686	188	31
		5310-01-372-5686	238	34
19207	12414586	2530-01-384-1284	159	11
19207	12414592	5340-01-376-9486	163	3
		5340-01-376-9486	164	4
0FW39	12414610-004	2990-01-372-5033	38	3
0FW39	12414611-001		39	8
0FW39	12414627-003	2990-01-387-7205	40	5
0FW39	12414629-005	2990-01-370-6089	40	9
19207	12414630	2990-01-375-8110	39	2
19207	12414636	4710-01-383-5064	26	33
0FW39	12414643	4820-01-374-2819	19	4
		4820-01-374-2819	126	3
19207	12414665	5365-01-375-2172	2	16
0FW39	12414669-001X235		30	32
19207	12414669-002X416		30	31
19207	12414669-003X378		254	12
98624	12414669-004X241		254	14
19207	12414675-013	5365-12-156-4447	172	25
19205	12414675-048	5325-01-381-9806	158	2
49058	12414686	4720-01-363-8971	28	4
19207	12414694-001	4720-01-439-9698	137	10
19207	12414694-002	4720-01-439-9700	137	11
19207	12414698-001	4710-01-K65-1577	252	19
19207	12414698-002	4720-01-K65-1578	252	18
19207	12414699-001	4720-01-440-3701	252	6
19207	12414714	5340-01-371-7188	105	3
0FW39	12414730-001	9905-01-K60-8907	246	9
19207	12414732	9905-01-393-6277	246	9
19207	12414739	2510-01-400-2670	210	9
19207	12414742	2590-01-384-0717	206	7
		2590-01-384-0717	207	12
0FW39	12414743	5340-01-438-8908	210	1
0FW39	12414744	2510-01-374-3022	180	1
0FW39	12414915	2510-01-375-1901	180	3
0FW39	12414916	2510-01-374-3120	180	3
0FW39	12414944		181	1
19207	12415050	2510-01-417-5847	181	6
19207	12415120	2510-01-417-9339	181	20
19207	12415145	2510-01-399-1816	181	15
19207	12415160	2510-01-411-3968	181	21
19207	12415180	2510-01-417-6192	181	51
19207	12415210	2510-01-417-6193	181	38
19207	12415240	2510-01-417-6190	181	48
19207	12415265	2510-01-398-5570	181	29
0FW39	12415300	3040-01-375-7325	181	11
		3040-01-375-7325	181	40
19207	12415301	5340-01-377-7216	181	8

CROSS REFERENCE INDEXES

PART NUMBER INDEX

FSCM	PART NUMBER	STOCK NUMBER	FIGURE NO	ITEM NO
		5340-01-377-7216	181	32
0FW39	12415302	5340-01-377-1545	181	12
		5340-01-377-1545	181	39
0FW39	12415304	5340-01-389-2348	181	24
0FW39	12415305	2510-01-375-7990	181	14
0FW39	12415306	5340-01-376-2889	181	23
0FW39	12415307	5340-01-376-0672	181	47
0FW39	12415308	2510-01-375-7991	181	4
0FW39	12415309	2510-01-375-7992	181	50
0FW39	12415312	2510-01-375-7993	181	34
0FW39	12415313	4910-01-378-8897	181	28
0FW39	12415314	4910-01-393-4531	181	25
0FW39	12415320	2510-01-375-6294	180	2
		2510-01-375-6294	181	46
0FW39	12415321	2510-01-375-7117	180	6
		2510-01-375-7117	181	52
0FW39	12415322	2510-01-376-0667	180	6
		2510-01-376-0667	181	43
19207	12415745		211	1
0FW39	12415763		236	8
19207	12416350		266	35
19207	12416354	5975-01-382-5358	235	2
19207	12416357-001		233	9
19207	12416357-002		233	11
19207	12416360		211	6
19207	12416367		220	2
19207	12416368		218	2
19207	12416370		212	1
19207	12416372	5340-01-384-0377	220	1
0FW39	12416372-002		220	9
19207	12416374	5340-01-386-8153	218	1
0FW39	12416376	2540-01-398-4505	218	7
		2540-01-398-4505	219	16
19207	12416380	2510-01-381-1817	215	1
19207	12416382	5305-01-398-1288	218	30
19207	12416384		220	10
19207	12416386		221	7
19207	12416387		221	4
19207	12416388	2540-01-386-6897	221	9
19207	12416389		221	18
19207	12416407	5340-01-386-3522	215	3
19207	12416408	5340-01-386-3479	215	16
0FW39	12416413		225	5
19207	12416414		231	21
19207	12416417		218	3
			219	32
			220	3
0FW39	12416443	5365-01-408-5884	218	5
		5365-01-408-5884	219	11
0FW39	12416444-002	5365-01-397-5097	218	4
		5365-01-397-5097	219	17
19207	12416444-003	5365-01-397-5098	218	19

CROSS REFERENCE INDEXES

PART NUMBER INDEX

FSCM	PART NUMBER	STOCK NUMBER	FIGURE NO	ITEM NO
19207	12416444-004		219	22
19207	12416447	3040-01-398-8354	218	11
		3040-01-398-8354	219	8
19207	12416448	5365-01-398-2344	218	37
19207	12416449-001		218	33
19207	12416449-002	2540-01-398-8355	218	18
19207	12416450	3040-01-406-3930	218	21
19207	12416455		218	35
19207	12416456		217	13
0FW39	12416457	5340-01-384-9538	217	3
0FW39	12416458-001	5365-01-384-6869	217	2
19207	12416467	5330-01-385-3769	215	6
19207	12416468	5340-01-384-0113	215	5
19207	12416481-001		236	9
19207	12416481-002		236	10
19207	12416502	5340-01-410-9095	235	8
19207	12416511		232	13
19207	12416541		215	25
19207	12416546	9905-01-388-3659	236	2
19207	12416547	9905-01-387-7439	236	6
19207	12416548	9905-01-387-3975	236	3
19207	12416549	9905-01-387-7385	236	7
19207	12416550	9905-01-388-2276	236	5
19207	12416551	9905-01-388-7836	236	4
19207	12416552-001		236	12
19207	12416552-002		236	14
19207	12416554	9905-01-400-1415	236	11
19207	12416555	9905-01-410-8866	236	13
19207	12416557		218	15
			219	46
19207	12416563	4730-01-398-5654	218	14
		4730-01-398-5654	219	45
19207	12416565		218	39
			219	44
19207	12416566		218	38
19207	12416573		221	13
19207	12416576		236	15
0FW39	12416588	3940-01-411-0389	214	4
19207	12416589	5340-01-410-7118	214	8
19207	12416591		215	18
19207	12416599	2590-01-K63-1549	214	7
0FW39	12416602	2930-01-411-3967	233	1
0FW39	12416603-001	2540-01-399-4208	220	15
19207	12416603-002	2540-01-398-6969	220	7
19207	12416641		267	7
19207	12416646-001		267	4
19207	12416646-002		267	3
19207	12417246		208	14
19207	12417248-001		206	10
			207	20
19207	12417249		210	8
19207	12417250	2510-01-439-5269	163	36

CROSS REFERENCE INDEXES

PART NUMBER INDEX

FSCM	PART NUMBER	STOCK NUMBER	FIGURE NO	ITEM NO
19207	12417261	2510-01-439-5301	163	35
0FW39	12417262-002	4720-01-443-6457	250	5
19207	12417262-005		250	10
19207	12417273	5340-01-369-3356	174	8
19207	12417274	5340-01-369-5525	174	1
0FW39	12417277	2510-01-364-8303	173	24
		2510-01-364-8303	175	1
19207	12417279	6150-01-374-7777	90	1
19207	12417307	2530-01-377-6617	159	14
19207	12417310-002	4720-01-370-5417	28	18
19207	12417311	4720-01-K65-1580	252	37
19207	12417312	4720-01-442-2837	252	9
19207	12417313-002	4720-01-K65-1582	252	23
19207	12417316	9905-01-377-9725	246	14
19207	12417317	9905-01-377-7789	246	19
0T1J0	12417328	2510-01-377-4287	195	6
0FW39	12417329	2540-01-377-3121	191	4
		2540-01-377-3121	195	14
		2540-01-377-3121	195	14
4K133	12417329-001	2540-01-439-5684	195	14
0FW39	12417332-001	5306-01-369-8893	155	3
19207	12417337	2510-01-374-3119	206	6
		2510-01-374-3119	207	11
19207	12417346	5340-01-381-3940	30	7
19207	12417347	2815-01-374-3996	254	11
19207	12417378	5340-01-435-9087	195	4
19207	12417379	5340-01-384-3471	56	3
19207	12417381	5930-01-372-9484	138	7
0FW39	12417386	3815-01-387-5655	238	11
19207	12417388	2510-01-388-1204	175	4
19207	12417390	5315-01-434-0915	173	18
		5315-01-434-0915	173	23
19207	12417391	2590-01-377-6605	163	24
		2590-01-377-6605	164	30
0FW39	12417393	5340-01-371-1077	175	3
19207	12417395	5340-01-369-5626	173	15
19207	12417403	2510-01-377-3040	163	22
		2510-01-377-3040	164	28
19207	12417405	2510-01-374-2462	173	16
0FW39	12417407	2510-01-370-2726	173	7
0FW39	12417411	2510-01-387-8469	173	8
0FW39	12417416		173	21
0FW39	12417451	2510-01-373-7683	175	1
19207	12417452-001		163	2
19207	12417452-009		164	3
19207	12417457	3120-01-387-9781	238	18
19207	12417458	3040-01-393-0945	238	19
19207	12417459	3040-01-387-4726	238	23
19207	12417460	5340-01-372-5695	41	12
0FW39	12417461	3040-01-375-8191	36	10
0FW39	12417462	5330-01-375-2906	183	5
0FW39	12417464	5340-01-375-7613	194	12

CROSS REFERENCE INDEXES

PART NUMBER INDEX

FSCM	PART NUMBER	STOCK NUMBER	FIGURE NO	ITEM NO
0FW39	12417468	5330-01-375-2905	194	19
0FW39	12417469	5330-01-375-2907	BULK	64
0FW39	12417469X540		194	18
19207	12417470-003	3040-01-375-7396	185	16
0FW39	12417471-003	5340-01-375-4171	185	20
0FW39	12417472	5340-01-376-0676	194	16
0FW39	12417473	5355-01-376-3675	185	3
19207	12417474	5307-01-385-3377	186	1
0FW39	12417475	3010-01-375-7321	186	22
0FW39	12417476	3010-01-375-7322	186	5
0FW39	12417477	2540-01-375-7994	186	23
0FW39	12417478	2540-01-375-7995	186	4
0FW39	12417479-001	5340-01-375-7257	186	9
19207	12417480	5365-01-375-0493	186	8
0FW39	12417481	3010-01-375-7323	186	24
0FW39	12417482	3010-01-375-6805	186	19
0FW39	12417485	5330-01-375-2909	198	7
0FW39	12417486	2590-01-393-2153	198	3
0FW39	12417487	2590-01-377-4295	198	5
0FW39	12417488	5365-01-375-5170	241	5
0FW39	12417489	5340-01-407-0493	199	9
		5340-01-407-0493	200	3
0FW39	12417490	2540-01-375-7317	240	7
0FW39	12417493		186	11
0FW39	12417493-003	5340-01-375-9070	186	12
0FW39	12417494	5315-01-375-7279	185	21
0FW39	12417502	2540-01-378-9352	185	5
19207	12417503	5310-01-406-6326	36	19
0FW39	12417511	2430-01-377-6614	158	18
19207	12417517	2530-01-378-5649	158	21
0FW39	12417518-001		149	29
0FW39	12417519	2540-01-375-8121	36	6
19207	12417523-016	5330-01-381-9897	161	14
0FW39	12417525	5340-01-375-2864	240	10
0FW39	12417526	5340-01-375-3042	197	1
		5340-01-375-3042	197	1
0FW39	12417527	5340-01-377-1543	197	2
0FW39	12417562	4820-01-443-9908	197	3
0FW39	12417565	4730-01-375-6304	240	3
19207	12417568	2510-01-384-1051	283	6
0FW39	12417577	6220-01-384-0085	167	6
0FW39	12417578	6220-01-384-0399	167	3
19207	12417585	2540-01-390-1042	149	20
0FW39	12417587	5355-01-376-3674	36	2
19207	12417598	5325-01-375-1299	240	6
19207	12417599	5340-01-381-3855	197	4
		5340-01-381-3855	197	47
0FW39	12417614	2510-01-377-8986	111	5
0FW39	12417615	2510-01-374-3735	111	2
19207	12417616	9905-01-377-9117	246	5
19207	12417618	9905-01-392-8089	246	18
19207	12417630	4810-01-375-3510	56	5

CROSS REFERENCE INDEXES

PART NUMBER INDEX

FSCM	PART NUMBER	STOCK NUMBER	FIGURE NO	ITEM NO
19207	12417632	2590-01-390-1041	41	15
19207	12417634	9905-01-377-4799	246	4
19207	12417640	5340-01-371-9405	30	2
19207	12417644	5340-01-386-9663	238	13
19207	12417650	6110-01-420-7839	52	63
		6110-01-420-7839	53	77
19207	12417652	2510-01-369-2054	179	11
19207	12417653-195	5315-01-388-8569	251	4
0FW39	12417654-003	6220-01-383-0792	61	3
0FW39	12417654-004	6220-01-375-3532	62	2
19207	12417678	5935-01-376-1385	52	44
		5935-01-376-1385	53	54
19207	12417681	5340-01-371-9882	163	30
		5340-01-371-9882	164	33
19207	12417684	5340-01-377-1609	163	33
		5340-01-377-1609	164	31
19207	12417692	2590-01-372-8155	172	34
19207	12417696	2590-01-372-8070	257	36
19207	12417700	3120-01-369-6733	21	14
		3120-01-369-6733	172	21
		3120-01-369-6733	257	24
0FW39	12417705-001	2540-01-375-3950	194	13
19207	12417706-001	2540-01-375-1903	194	26
19207	12417707	5310-01-381-3878	185	4
19207	12417714	5306-01-375-7128	185	18
19207	12417717	5340-01-375-3104	194	9
0FW39	12417721	3040-01-375-6341	186	25
0FW39	12417722	3040-01-375-7397	186	17
0FW39	12417723	3040-01-375-6342	186	16
0FW39	12417724	3040-01-375-6343	186	18
0FW39	12417725	5330-01-375-2908	186	20
0FW39	12417731	5330-01-376-5259	192	8
0FW39	12417733	5330-01-377-1997	192	2
0FW39	12417734	5330-01-375-4279	192	7
0FW39	12417747	2590-01-376-4484	241	4
0FW39	12417758	2540-01-384-0975	199	4
		2540-01-384-0975	200	2
0FW39	12417765	2510-01-374-3117	196	9
0FW39	12417766	2510-01-375-1673	196	9
19207	12417770	5310-01-375-7175	196	11
0FW39	12417784	5330-01-375-4280	192	5
0FW39	12417785	2540-01-375-7316	240	5
0FW39	12417794-001	2510-01-375-8116	190	4
0FW39	12417804-001	2540-01-377-4296	184	5
0FW39	12417805-001	2540-01-375-7404	184	4
19207	12417807-001		184	3
19207	12417811	2590-01-407-9283	196	14
19207	12417812	2590-01-388-5469	196	14
19207	12417815	5340-01-375-2927	185	10
19207	12417830-001	2510-01-375-1500	198	6
19207	12417830-002	2510-01-375-3694	198	4
19207	12417830-003	2540-01-374-6939	198	6

CROSS REFERENCE INDEXES

PART NUMBER INDEX

FSCM	PART NUMBER	STOCK NUMBER	FIGURE NO	ITEM NO
19207	12417830-004	2540-01-375-7119	198	4
19207	12417853-001	5330-01-377-1638	193	8
19207	12417853-002	5330-01-377-1534	193	11
0FW39	12417855	2510-01-388-4847	193	4
19207	12417856	5330-01-377-1535	193	5
82484	12417860	2540-01-384-6247	241	14
19207	12417872	5330-01-407-0494	36	20
19207	12417875	5340-01-344-0296	78	27
19207	12417877	6350-01-378-0973	68	1
0FW39	12417884	2530-01-378-6001	158	1
19207	12417885	3040-01-417-2746	172	32
19207	12417886	2530-01-371-7762	172	30
19207	12417888	5315-01-369-4912	172	27
19207	12417889	3010-01-370-2955	172	24
19207	12417890	5315-01-369-3376	172	26
19207	12417891	2590-01-417-1737	172	23
0FW39	12417895	6220-01-387-4799	163	25
		6220-01-387-4799	164	37
0FW39	12417896	6220-01-387-4576	163	29
		6220-01-387-4576	164	34
19207	12417897	2590-01-407-1906	163	7
		2590-01-407-1906	164	9
19207	12417904-002	5306-01-371-3099	173	14
		5306-01-371-3099	175	2
19207	12417905	3040-01-372-1486	250	1
19207	12417907	5340-01-377-0914	163	19
		5340-01-377-0914	164	19
19207	12417908	5340-01-377-1066	163	14
		5340-01-377-1066	164	15
0FW39	12417916	4730-01-370-5378	155	13
0FW39	12417918	3120-01-369-8978	175	12
0FW39	12417919	2590-01-374-3851	173	12
19207	12417921	2590-01-374-1844	173	4
		2590-01-374-1844	175	11
19207	12417922	5340-01-369-8172	173	13
19207	12417924	5340-01-371-7958	250	3
19207	12417925	2510-01-372-8454	173	26
		4720-01-439-9699	175	13
19207	12417926-001	4720-01-K65-1513	285	4
19207	12417926-002	4720-01-439-9703	285	7
19207	12417926-004	5305-01-375-7357	285	2
19207	12417929	5305-01-440-1298	253	5
19207	12417929-001	5315-01-376-0576	253	5
0FW39	12417930	5315-01-376-0576	169	2
		5315-01-376-0576	170	8
		5315-01-376-0576	187	7
		5315-01-376-0576	253	6
19207	12417937-004	4710-01-381-8667	257	46
19207	12417940	4710-01-383-5344	264	24
0FW39	12417942	2540-01-377-6607	167	10
19207	12417948-001	5310-01-386-9041	189	34
19207	12417948-002	5310-01-387-9787	42	4

CROSS REFERENCE INDEXES

PART NUMBER INDEX

FSCM	PART NUMBER	STOCK NUMBER	FIGURE NO	ITEM NO
19207	12417948-004	5365-01-436-8308	40	8
		5365-01-436-8308	195	13
19207	12417948-005	5310-01-381-9974	283	4
19207	12417951	5306-01-444-0593	177	11
19207	12417958-006	5306-01-440-1293	195	3
19207	12417958-007	5305-01-377-0867	195	12
19207	12417958-009	5306-01-394-9295	46	47
19207	12417958-016	5306-01-421-6167	102	13
19207	12417958-041	5306-01-387-6223	191	9
19207	12417959-068	5305-01-433-6841	186	10
19207	12417959-069	5305-01-389-2387	181	7
		5305-01-389-2387	181	33
19207	12417959-073	5305-01-434-0879	186	6
19207	12417962-046	5315-01-371-7218	188	41
0FW39	12417962-081	5315-01-447-2297	188	37
19207	12417962-088	5315-01-433-9938	188	27
19207	12417963-004	5310-01-411-5798	73	2
		5310-01-411-5798	148	21
19207	12417963-014	5310-01-155-0057	179	14
19207	12417964-017	5315-01-434-5844	173	17
		5315-01-434-5844	173	22
19207	12417975-005	5310-12-196-5989	26	20
19207	12417975-006	5365-01-374-6928	48	3
		5365-01-374-6928	57	6
		5365-01-374-6928	69	34
		5365-01-374-6928	78	15
		5365-01-374-6928	105	2
		5365-01-374-6928	148	3
		5365-01-374-6928	182	19
		5365-01-374-6928	184	2
		5365-01-374-6928	194	7
		5365-01-374-6928	205	12
		5365-01-374-6928	205	20
		5365-01-374-6928	252	48
19207	12417975-008	5310-01-376-5302	68	6
		5310-01-376-5302	78	9
		5310-01-376-5302	151	10
		5310-01-376-5302	152	18
		5310-01-376-5302	185	19
		5310-01-376-5302	190	12
		5310-01-376-5302	196	2
19207	12417975-020		181	16
			181	30
19207	12417980	2540-01-377-7499	167	13
19207	12417981	5340-01-406-9697	167	15
19207	12417982	2540-01-377-7500	167	8
19207	12417993	2540-01-388-2781	149	19
19207	12418003	4720-01-392-0316	19	1
0FW39	12418004-001	4720-01-443-6472	126	1
0FW39	12418004-002		126	1
19207	12418005	5340-01-374-0422	19	3
19207	12418012-001	5305-01-371-9850	178	1

CROSS REFERENCE INDEXES

PART NUMBER INDEX

FSCM	PART NUMBER	STOCK NUMBER	FIGURE NO	ITEM NO
19207	12418012-004	5305-01-369-8253	177	3
19207	12418014	5340-01-383-8847	177	15
19207	12418016	2590-01-373-5499	177	10
19207	12418022	5340-01-371-1092	176	5
19207	12418023	5305-01-369-3263	176	7
0FW39	12418030	5340-01-368-5803	176	6
0FW39	12418037		161	13
19207	12418039	4720-01-395-2232	41	5
0FW39	12418040	4720-01-377-6618	161	11
0FW39	12418041	4720-01-444-2333	161	1
19207	12418045-006		161	15
19207	12418065-004	4730-01-375-1450	197	6
19207	12418065-005	4730-01-375-0329	197	5
19207	12418070	5340-01-383-8797	252	46
19207	12418084	5310-01-371-8419	173	20
		5310-01-371-8419	175	6
19207	12418088	9905-01-K60-8909	246	9
19207	12418102	5306-01-377-1546	158	5
0FW39	12418116-001		246	11
19207	12418124-001	4720-01-372-4876	30	19
19207	12418124-002	4720-01-372-4877	30	18
19207	12418124-003		257	39
0FW39	12418124-004		257	45
19207	12418136-001	2510-01-413-2594	193	6
0FW39	12418136-002	2510-01-413-2594	193	1
0FW39	12418138	2510-01-376-2624	192	4
0FW39	12418142	6680-01-373-5740	254	17
19207	12418153	5306-01-372-3017	188	30
19207	12418154	5310-01-411-5797	188	16
19207	12418155	3120-01-371-7961	188	13
19207	12418156	5310-01-372-3024	188	12
19207	12418157-001		163	13
19207	12418157-009		164	14
19207	12418158	5365-01-371-9887	188	20
19207	12418159	5365-01-371-9556	188	14
19207	12418160	3130-01-372-3043	188	43
19207	12418162-001	4720-01-383-5395	264	14
19207	12418162-002	4720-01-383-5284	264	30
19207	12418162-003	4720-01-384-6531	264	34
19207	12418167	5340-01-371-7184	188	33
19207	12418168	2510-01-420-9972	188	22
19207	12418177	3130-01-372-3044	188	9
19207	12418216	2530-01-420-9976	188	26
19207	12418217	2590-01-422-7146	188	38
19207	12418218	3120-01-371-8487	188	40
19207	12418219	5365-01-371-9888	188	24
19207	12418220	5310-01-372-3495	250	2
19207	12418221	5306-01-379-5092	188	5
19207	12418222	5365-01-420-8859	188	3
19207	12418228-001	5340-01-369-5039	38	8
		5340-01-369-5039	39	5
19207	12418231	5340-01-381-3813	264	7

CROSS REFERENCE INDEXES

PART NUMBER INDEX

FSCM	PART NUMBER	STOCK NUMBER	FIGURE NO	ITEM NO
19207	12418248	5340-01-377-7217	158	17
19207	12418261	9905-01-386-5295	246	9
19207	12418270	3940-01-379-7371	168	1
19207	12418278	5340-01-378-2532	138	35
19207	12418280	2590-01-374-1842	177	2
19207	12418298-002	4710-01-375-3417	245	1
19207	12418303	5340-01-379-8747	148	8
		5340-01-379-8747	161	6
19207	12418314		171	4
0FW39	12418315-001	2510-01-376-0668	183	10
19207	12418323	2510-01-375-1492	183	2
19207	12418327	5365-01-381-3976	283	5
19207	12418329	2540-01-375-1315	205	1
19207	12418329-001	2540-01-411-2142	205	1
19207	12418330	2540-01-375-1316	205	1
19207	12418330-001	2540-01-411-2141	205	1
0FW39	12418337	2510-01-375-8117	199	11
0FW39	12418338	2510-01-374-3020	199	10
0FW39	12418339-001	2510-01-429-1301	199	5
19207	12418342	5961-01-375-0478	52	78
		5961-01-375-0478	53	93
19207	12418348	5340-01-384-0869	197	7
19207	12418357		205	18
19207	12418358		205	18
19207	12418359-001	5340-01-410-8398	205	2
19207	12418359-002	5340-01-410-8396	205	2
19207	12418359-006	5340-01-410-8393	205	4
		5340-01-410-8393	205	17
19207	12418359-009	5340-01-412-1743	205	2
19207	12418359-010	5340-01-411-1620	205	2
19207	12418362-004	2590-01-382-6719	283	14
19207	12418366-012	2510-01-383-5135	283	22
19207	12418366-013		283	15
19207	12418370		202	5
19207	12418371	5340-01-410-8400	205	9
0FW39	12418379	2510-01-377-4283	200	17
19207	12418380	2510-01-377-6608	200	15
0FW39	12418381	2510-01-377-4284	200	18
0FW39	12418382	2510-01-377-4285	200	16
0FW39	12418383	2510-01-377-4286	200	9
19207	12418384-004	2510-01-428-9699	200	8
19207	12418384-005	2510-01-428-1691	200	12
19207	12418384-006	2510-01-428-1696	200	13
19207	12418384-007	2510-01-377-3041	200	7
19207	12418384-008	2510-01-377-3210	200	11
0FW39	12418392	2540-01-376-4001	194	11
0FW39	12418393	2540-01-428-6195	185	7
19207	12418395-001	5330-01-377-1640	193	7
19207	12418395-002	5330-01-377-1625	193	2
0FW39	12418400-001		246	12
19207	12418448	3020-01-387-5008	238	5
0FW39	12418449	3110-01-392-0167	238	7

CROSS REFERENCE INDEXES

PART NUMBER INDEX

FSCM	PART NUMBER	STOCK NUMBER	FIGURE NO	ITEM NO
19207	12418450	2835-01-406-3776	238	6
19207	12418455	3040-01-387-7220	238	33
19207	12418456	5975-01-387-5066	238	29
19207	12418458	5975-01-387-4800	238	27
19207	12418460-001		21	8
19207	12418460-002		124	7
0FW39	12418469	5320-01-376-0699	185	13
		5320-01-376-0699	199	6
		5320-01-376-0699	200	10
19207	12418476	2590-01-426-7041	195	5
19207	12418479-001	5306-01-377-0274	191	14
19207	12418479-003	5306-01-387-6182	195	16
19207	12418481	5340-01-387-6787	252	12
19207	12418482	3040-01-387-7213	238	37
19207	12418484	3120-01-388-1568	238	38
19207	12418488-001	5340-01-416-9965	191	16
19207	12418488-002	5340-01-416-9963	191	16
0FW39	12418489	5340-01-377-2458	191	12
4K133	12418490	2540-01-377-4293	191	15
19207	12418543-001	3040-01-389-7826	270	15
19207	12418543-002	3040-01-389-4265	270	10
19207	12418544-001	4710-01-383-5876	270	13
19207	12418545	2540-01-383-5134	270	17
19207	12418546	2540-01-383-5962	270	17
19207	12418547	2540-01-383-5543	270	17
19207	12418548	2540-01-442-5243	270	3
19207	12418551	5340-01-387-8231	270	5
19207	12418552	5340-01-397-0288	270	16
19207	12418555-002	2540-01-387-3972	270	2
19207	12418557-002	5315-01-388-0908	270	11
19207	12418558	5340-01-387-8265	270	6
19207	12418559-001	2540-01-383-5328	270	9
19207	12418559-002	2540-01-383-5416	270	14
19207	12418568-001		210	5
19207	12418595	5340-01-429-0964	210	2
19207	12418597		210	4
19207	12418608		209	9
19207	12418609	5340-01-396-7237	208	10
19207	12418616	5365-01-394-2734	209	1
19207	12418620	5365-01-394-2735	209	3
19207	12418621-001		209	4
19207	12418628	5340-01-389-9118	208	12
19207	12418629	5340-01-058-7384	208	6
19207	12418630	5340-01-393-8500	208	8
0FW39	12418631	5340-01-389-6992	208	11
19207	12418632	5330-01-377-5224	208	4
19207	12418633	5330-01-444-2514	208	3
19207	12418640-002		210	12
19207	12418640-003		210	10
19207	12418665-001	5340-01-376-1830	208	5
19207	12418665-002		208	13
19207	12418704	5340-01-410-9096	208	2

CROSS REFERENCE INDEXES

PART NUMBER INDEX

FSCM	PART NUMBER	STOCK NUMBER	FIGURE NO	ITEM NO
19207	12418755	2540-01-383-5754	270	3
19207	12418763-001		210	13
			210	17
19207	12418763-002		210	7
19207	12418763-003		216	17
19207	12418764	5315-01-381-1935	210	14
19207	12418774-001		210	16
19207	12418775	5340-01-383-9823	210	15
19207	12418778	2510-01-411-2433	164	45
19207	12418779	2510-01-411-2471	164	43
19207	12418831	4820-01-396-7750	166	1
19207	12418832	5315-01-396-5839	166	4
19207	12418834-001		210	4
19207	12418835	5340-01-428-4045	210	1
19207	12418861	5315-01-398-8682	166	6
19207	12418862	5315-01-394-2736	166	8
19207	12418909	2510-01-439-5681	166	12
19207	12418937	2510-01-384-0910	206	9
		2510-01-384-0910	207	16
0FW39	12418950	2540-01-394-9681	206	8
		2540-01-394-9681	207	15
19207	12418960	5340-01-420-3525	208	9
19207	12419003	5310-01-376-0773	241	18
19207	12419009	4820-01-377-3042	161	16
19207	12419014	5340-01-386-8504	237	2
19207	12419015	5340-01-386-8493	238	30
19207	12419018	5340-01-387-5389	237	3
19207	12419026	3120-01-369-8361	179	3
19207	12419029	5310-01-370-0596	179	1
19207	12419032	5340-01-431-8755	179	5
19207	12419034-001	2590-01-K65-1494	238	3
19207	12419037	3040-01-387-7055	238	8
19207	12419042	4720-01-K65-1583	252	44
0FW39	12419043	4720-01-442-4369	252	22
19207	12419051	3040-01-442-3643	177	6
19207	12419057-003	5340-01-390-3741	263	16
19207	12419086	4730-01-381-2828	264	26
19207	12419097-001	9905-01-446-5072	246	13
0FW39	12419098	9905-01-377-7788	246	15
19207	12419099	9905-01-377-5096	246	1
19207	12419100	9905-01-378-6628	246	2
0FW39	12419113	5340-01-406-9696	240	11
19207	12419124	9905-01-393-2581	246	17
0FW39	12419131-003		41	22
19207	12419146	5340-01-381-3947	257	32
19207	12419152	4720-01-383-5508	257	30
19207	12419153	5340-01-381-3852	264	29
19207	12419163	3040-01-377-4289	149	21
0FW39	12419164-001		149	20
19207	12419176	5935-01-381-4054	87	11
0FW39	12419182	5340-01-410-8397	205	10
19207	12419187	5340-01-374-0416	63	5

CROSS REFERENCE INDEXES

PART NUMBER INDEX

FSCM	PART NUMBER	STOCK NUMBER	FIGURE NO	ITEM NO
19207	12419190	2510-01-388-1196	175	7
19207	12419191-001		268	32
19207	12419191-003		268	34
19207	12419191-004		268	38
19207	12419202	5340-01-387-2170	238	4
19207	12419221	5306-01-379-5092	2	11
19207	12419222	5310-01-420-7615	2	12
19207	12419231	2990-01-407-9264	37	2
19207	12419232	2990-01-387-9524	37	1
19207	12419260	5340-01-381-3820	268	19
19207	12419265	5330-01-386-9019	264	9
19207	12419267	5340-01-371-7957	204	5
19207	12419270	2510-01-377-4279	163	8
		2510-01-377-4279	164	10
19207	12419283	2990-01-387-7201	40	13
19207	12419284-003		268	35
19207	12419802	4710-01-383-5247	268	22
0FW39	12419803-001X		37	5
0FW39	12419803-002X		37	6
19207	12419806	4010-01-377-0335	168	9
		4010-01-377-0335	212	6
19207	12419810	4730-01-384-0881	252	42
19207	12419827		26	35
19207	12419830-009	5310-01-376-4745	194	17
19207	12419831-001	5310-01-376-0772	183	4
		5310-01-376-0772	185	1
		5310-01-376-0772	198	8
		5310-01-376-0772	199	2
19207	12419833	5340-01-387-0556	238	32
19207	12419834	5340-01-387-4083	238	36
0FW39	12419834-003	5340-01-387-4083	238	36
19207	12419835	5315-01-410-9101	172	33
19207	12419844	5340-01-372-4781	153	1
19207	12419865		135	11
19207	12419869	3120-01-385-4540	149	26
4K133	12419875	5970-01-379-7352	195	8
19207	12419881	2590-04-399-0855	163	12
		2590-01-399-0855	164	13
0FW39	12419899	5340-01-375-6450	186	7
19207	12419900	5340-01-387-9831	196	16
19207	12419901	5340-01-383-9824	196	16
19207	12419904-001	5340-01-416-9967	38	2
19207	12419907	5340-01-378-3617	152	6
19207	12419910	5340-01-377-0893	148	20
19207	12419910-001	5340-01-439-7766	148	20
19207	12419914	5340-01-377-2804	147	5
19207	12419915	5340-01-377-1643	147	7
19207	12419916	2510-01-377-4334	163	28
		2510-01-377-4334	164	41
19207	12419920	5340-01-389-7004	43	19
19207	12419927-002	5999-01-374-6031	52	88
		5999-01-374-6031	53	103

CROSS REFERENCE INDEXES

PART NUMBER INDEX

FSCM	PART NUMBER	STOCK NUMBER	FIGURE NO	ITEM NO
19207	12419927-003	5999-01-374-5638	52	90
		5999-01-374-5638	53	106
0FW39	12419928-001	5940-01-374-8362	53	104
19207	12419928-002	5940-01-374-8361	52	95
		5940-01-374-8361	53	111
19207	12419928-006	5940-01-374-9838	52	98
		5940-01-374-9838	53	114
19207	12419928-008	5940-01-376-1907	52	99
		5940-01-376-1907	53	115
19207	12419939	9905-01-382-1109	246	8
19207	12419942-010		242	8
0FW39	12419942-011	2590-01-390-1038	242	4
0FW39	12419943-001	5340-01-375-1269	242	5
19207	12419944-001	5340-01-443-1360	242	13
19207	12419947	5935-01-377-1136	52	28
		5935-01-377-1136	53	32
19207	12419950-001	5340-01-408-2771	164	18
19207	12419950-002	5340-01-407-5392	164	1
19207	12419951	2590-01-434-5435	164	26
19207	12419953-053	5306-01-K65-4316	270	26
19207	12419954-179		207	19
19207	12419961	3120-01-420-8269	188	32
19207	12419962	5935-01-381-4308	88	9
19207	12419963	5340-01-439-0846	164	29
0FW39	12419976	2540-01-383-5509	258	1
0FW39	12419977	2510-01-388-1296	258	2
19207	12419978	4710-01-381-8909	258	28
19207	12419979	4710-01-382-2052	258	22
19207	12419993	2930-01-383-5391	258	18
0FW39	12420026	8145-01-K62-5221	255	2
19207	12420027	8145-01-397-7426	255	17
19207	12420028	2510-01-396-9061	255	24
19207	12420030	5340-01-394-0424	255	11
19207	12420031	5340-01-394-0429	255	13
19207	12420032	5340-01-394-6377	255	15
		5340-01-394-6377	256	17
19207	12420033	7690-01-418-9373	255	22
19207	12420036		255	19
			256	19
19207	12420037	5330-01-394-2410	255	3
0FW39	12420042	8145-01-396-8895	256	2
0FW39	12420043	8145-01-396-9507	256	18
19207	12420044	2510-01-396-8119	256	25
19207	12420045	5340-01-394-0430	256	26
19207	12420046	5340-01-394-0431	256	27
19207	12420047	5340-01-394-2395	256	13
19207	12420048	5340-01-394-0427	256	11
19207	12420049	5340-01-394-0428	256	12
19207	12420050	7690-01-399-0346	256	22
19207	12420056	5330-01-394-2411	256	3
19207	12420062-001	4720-01-426-7849	137	21
19207	12420062-002	4720-01-429-9895	143	9

CROSS REFERENCE INDEXES

PART NUMBER INDEX

FSCM	PART NUMBER	STOCK NUMBER	FIGURE NO	ITEM NO
19207	12420062-003	4720-01-429-9897	142	9
19207	12420062-004	4720-01-439-9696	139	26
0FW39	12420062-005	4720-01-430-2719	146	2
19207	12420063-002	4720-01-439-9708	139	36
19207	12420063-004	4720-01-439-9709	139	34
19207	12420064-001	4720-01-439-5563	139	31
19207	12420064-002	4720-01-439-9706	139	19
19207	12420064-005	4720-01-439-6728	139	32
19207	12420064-006	4720-01-439-6769	146	1
19207	12420064-007	4720-01-439-6919	146	10
19207	12420064-009	4720-01-439-3201	146	6
19207	12420065	2815-01-395-2233	42	1
0FW39	12420066	2815-01-412-0269	42	6
19207	12420082		69	52
19207	12420084-003	5307-01-388-0489	36	3
19207	12420085-002	2530-01-384-0805	36	5
19207	12420086-002		36	4
19207	12420087	5340-01-442-9165	69	2
0FW39	12420089-001		69	50
19207	12420090		69	45
19207	12420113-007	5340-01-391-9682	242	8
0FW39	12420113-008	2590-01-381-1559	242	4
19207	12420137-001	2590-01-382-2061	190	9
19207	12420137-002	2510-01-388-4276	190	10
19207	12420137-003	2510-01-390-3730	190	11
19207	12420137-004	2510-01-388-1131	190	13
19207	12420173	2510-01-388-1920	69	37
19207	12420174		69	14
19207	12420182	6625-01-388-8341	259	1
0FW39	12420183	6150-01-387-6375	261	1
19207	12420184	6150-01-382-5387	262	1
0FW39	12420196-003		253	21
19207	12420203	9905-01-395-2086	246	9
0FW39	12420205		246	9
0FW39	12420207-001	9905-01-392-6499	246	9
19207	12420226		259	10
19207	12420228	5340-01-381-2092	259	2
0FW39	12420230	6220-01-383-9914	269	2
19207	12420238	5340-01-420-7614	163	40
		5340-01-420-7614	164	48
19207	12420239	5340-01-381-3871	258	35
19207	12420264	5340-01-385-2003	57	8
19207	12420270	2590-01-389-2223	172	35
19207	12420271	5307-01-381-9863	259	13
19207	12420275	4710-01-391-3192	271	10
19207	12420277-007		271	9
0FW39	12420277-008	4020-01-386-8148	271	11
19207	12420277-009		271	13
19207	12420278-001	2540-01-387-3988	271	5
19207	12420278-002	2540-01-387-3991	271	3
19207	12420278-003	2540-01-387-3976	271	14
19207	12420279-002	4710-01-391-3193	271	4

CROSS REFERENCE INDEXES

PART NUMBER INDEX

FSCM	PART NUMBER	STOCK NUMBER	FIGURE NO	ITEM NO
19207	12420279-003	4710-01-388-5501	271	2
19207	12420280	5306-01-387-6028	271	12
		5306-01-387-6028	271	17
19207	12420281	2540-01-387-3987	271	7
0FW39	12420281-015		271	7
19207	12420291	5340-01-K65-3946	271	6
19207	12420293	5340-01-387-9853	149	1
19207	12420294	5340-01-384-3451	149	25
19207	12420296	2835-01-406-5474	184	1
19207	12420297-001	5340-01-434-8087	164	38
19207	12420297-002	5340-01-433-9842	164	40
19207	12420299-001	2540-01-434-4542	167	15
19207	12420299-002	2590-01-434-0592	167	8
0FW39	12420308X457		245	7
19207	12420312	5340-01-420-7613	163	26
19207	12420314	5999-01-398-4763	158	4
19207	12420315	5935-01-391-3153	52	19
		5935-01-391-3153	53	23
0FW39	12420316	5940-01-387-4708	52	20
		5940-01-387-4708	53	24
19207	12420323		159	6
19207	12420331	5340-01-394-5380	129	5
19207	12420333	5340-01-383-9586	241	20
19207	12420337	2990-01-387-5166	263	13
19207	12420348-001	5340-01-394-2731	170	4
19207	12420348-002	5340-01-394-2737	170	6
19207	12420349	2510-01-387-3998	257	23
19207	12420350	2990-01-388-1262	257	17
19207	12420352-001	5340-01-395-5097	102	5
19207	12420358	5330-01-408-0930	69	46
19207	12420361	5340-01-384-1036	252	27
19207	12420362	4710-01-K65-1574	124	10
19207	12420367	5340-01-394-6379	169	9
19207	12420368	3940-01-395-0606	169	6
19207	12420370-001	5315-01-394-7292	170	3
19207	12420370-002	5315-01-406-7426	170	5
19207	12420370-003	5315-01-394-2743	169	7
19207	12420370-004	5315-01-394-2739	169	5
19207	12420370-005	5315-01-394-2413	169	11
19207	12420371	3940-01-395-0608	169	10
19207	12420374	3940-01-395-0605	169	1
0FW39	12420376-001		246	6
19207	12420381-001	2510-01-388-5581	185	2
0FW39	12420381-002	2510-01-388-5475	185	2
19207	12420411	5340-01-427-9810	148	17
		5340-01-427-9810	247	15
19207	12420419-003	4720-01-439-9701	139	35
19207	12420419-004	4720-01-439-9705	139	40
0FW39	12420420-001		BULK	65
0FW39	12420420-002		BULK	66
0FW39	12420420-003		BULK	67
0FW39	12420420-1X1900		182	9

CROSS REFERENCE INDEXES

PART NUMBER INDEX

FSCM	PART NUMBER	STOCK NUMBER	FIGURE NO	ITEM NO
19207	12420420-1X2200		182	5
19207	12420420-2X2200		182	6
19207	12420420-2X45		182	31
19207	12420420-3X175		182	33
19207	12420420-3X2200		182	1
19207	12420420-3X660		42	8
0FW39	12420421	5330-01-389-6109	183	3
19207	12420422	5340-01-389-2419	26	43
0FW39	12420423-001		39	6
19207	12420425	4710-01-423-4906	21	9
19207	12420426	4710-01-423-4873	124	5
19207	12420434	5340-01-410-9102	257	9
19207	12420438		149	16
0FW39	12420459-001		246	16
19207	12420463-001		268	27
19207	12420463-002		268	25
19207	12420472	2590-01-434-5221	187	5
19207	12420477	5340-01-394-6380	207	3
19207	12420478	5340-01-394-6382	207	13
19207	12420479	5306-01-395-1389	207	4
19207	12420482	5315-01-439-3775	283	20
19207	12420483	5340-01-438-8924	283	19
19207	12420484	5340-01-439-0280	283	18
19207	12420485	5310-01-436-1664	187	6
0FW39	12420486	5340-01-421-4196	172	22
		5340-01-421-4196	187	10
19207	12420488	5340-01-435-3190	187	3
19207	12420489		181	19
19207	12420491	4730-01-411-3969	257	27
19207	12420493	4730-01-439-7485	124	17
19207	12420494	2510-01-437-0748	182	21
19207	12420495-004	2540-01-437-1411	182	4
19207	12420495-008	2540-01-437-1413	182	32
19207	12420495-009	2540-01-435-0593	182	8
19207	12420502	6150-01-412-7286	264	8
19207	12420512	5310-01-426-8406	190	8
		5310-01-426-8406	196	8
0FW39	12420525	5340-01-421-4197	238	39
0FW39	12420533-001	6220-01-440-4784	165	1
0FW39	12420533-002		165	3
0FW39	12420533-003	6220-01-440-3743	165	3
19207	12420534-001	5340-01-416-7227	189	38
19207	12420534-002	5340-01-416-7228	189	11
19207	12420535	2805-01-418-2057	28	2
0FW39	12420537	2540-01-420-7928	238	25
0FW39	12420543	2590-01-417-0860	124	5
19207	12420546	5365-01-433-7232	188	18
19207	12420550	5307-01-416-9968	172	20
19207	12420552	4010-01-417-4525	172	18
0FW39	12420555	5940-01-420-7315	52	58
		5940-01-420-7315	53	71
19207	12420558	5306-01-424-0079	36	12

CROSS REFERENCE INDEXES

PART NUMBER INDEX

FSCM	PART NUMBER	STOCK NUMBER	FIGURE NO	ITEM NO
19207	12420560	5340-01-438-7231	36	27
0FW39	12420561	2590-01-419-2991	36	9
19207	12420562	5340-01-423-1002	36	1
0FW39	12420564	3040-01-437-8112	36	13
19207	12420567		69	30
19207	12420569-001	2590-01-434-5433	172	16
19207	12420569-003	2590-01-443-2213	172	16
19207	12420571-001	2590-01-378-3023	163	6
19207	12420571-002	2590-01-434-5436	164	8
19207	12420572-004X	4720-00-443-4746	137	17
		4720-00-443-4746	139	27
		4720-00-443-4746	153	9
		4720-00-443-4746	189	4
		4720-00-443-4746	247	19
		4720-00-443-4746	285	14
19207	12420572-006X		135	15
			136	3
			137	14
			138	15
			139	11
			140	10
			141	9
			142	2
			143	1
			145	1
			150	7
			151	1
			152	9
			153	16
			268	2
19207	12420572-008X		135	20
			136	2
			137	8
			138	18
			139	7
			140	1
			141	10
			142	6
			143	3
			144	1
			145	4
			149	17
			151	2
			152	3
			153	8
19207	12420572-010X		139	3
			285	9
19207	12420585	5340-01-416-0498	189	40
19207	12420586	5365-01-423-0888	189	46
19207	12420591	2540-01-438-5919	270	4
19207	12420621	4730-01-420-4738	249	24
19207	12420633-001	5330-01-K65-1499	194	27

CROSS REFERENCE INDEXES

PART NUMBER INDEX

FSCM	PART NUMBER	STOCK NUMBER	FIGURE NO	ITEM NO
0FW39	12420633-002	5330-01-K65-1652	194	18
19207	12420634-003	4710-01-370-1140	41	17
19207	12420635	5365-01-436-3422	270	20
19207	12420636	2510-01-417-2276	189	10
19207	12420637	5340-01-423-0945	189	15
19207	12420641	5340-01-417-5114	189	2
0FW39	12420679-001		246	10
0FW39	12420680-001		246	10
0FW39	12420681		246	10
0FW39	12420682		246	10
0FW39	12420683		246	10
0FW39	12420684		246	10
0FW39	12420685		246	10
19207	12420692	5340-01-K65-1448	38	5
19207	12420702		204	8
0FW39	12420702-010		204	9
19207	12420702-011		204	11
19207	12420729	2540-01-417-2277	189	35
19207	12420733		249	21
19207	12420735	5340-01-439-0821	41	32
19207	12420739-001		136	15
19207	12420739-002		136	6
19207	12420742	5340-01-440-1540	36	21
19207	12420743	2510-01-437-4202	182	18
19207	12420744	6110-01-434-1486	182	14
19207	12420745-001	4720-01-428-6939	253	4
19207	12420745-002	4720-01-426-7042	253	3
19207	12420745-003	4720-01-429-3835	253	19
19207	12420745-004	4720-01-429-3835	253	23
19207	12420745-005	4720-01-428-9859	249	7
19207	12420745-006	4720-01-426-7848	248	4
19207	12420745-008	4720-01-430-2720	251	1
0FW39	12420745-009	4720-01-426-7854	247	6
0FW39	12420745-010	4720-01-426-7853	251	7
0FW39	12420747	4320-01-417-2269	248	5
19207	12420750	5340-01-418-2903	253	13
0FW39	12420754	2930-01-434-5219	42	2
19207	12420755	2930-01-434-5220	42	7
19207	12420756	5325-01-433-4746	197	8
0FW39	12420758		246	24
0FW39	12420759		246	22
19207	12420760	5340-01-416-7232	249	17
19207	12420765	5935-01-K64-0318	70	12
19207	12420771	5306-01-421-6054	270	22
19207	12420774		249	15
19207	12420775		249	20
19207	12420792-003	5340-01-440-7687	247	18
19207	12420793	3040-01-417-6191	253	24
19207	12420802	2540-01-417-4888	204	7
0FW39	12420806-001	2540-01-435-6228	194	24
0FW39	12420806-002	2540-01-436-1180	194	1
19207	12420810	3020-01-443-5093	272	36

CROSS REFERENCE INDEXES

PART NUMBER INDEX

FSCM	PART NUMBER	STOCK NUMBER	FIGURE NO	ITEM NO
19207	12420812	3020-01-365-3053	7	13
19207	12420826	6150-01-423-6332	74	2
19207	12420839	5325-01-442-3597	270	21
19207	12420840-001	5340-01-423-2345	2	5
0FW39	12420847	5340-01-441-1014	26	53
19207	12420848	5340-01-K65-1540	162	11
19207	12420854	6160-01-433-4985	69	1
19207	12420855		69	41
0FW39	12420856	6160-01-442-9783	69	43
19207	12420868-001	6150-01-422-3454	85	1
19207	12420869-001	6150-01-423-7736	84	1
0FW39	12420870	6150-01-422-3455	86	1
19207	12420871	6150-01-K64-0321	80	1
0FW39	12420872	6150-01-423-5385	101	1
19207	12420873	6150-01-423-7763	80	1
19207	12420874	6150-01-423-7745	79	1
19207	12420875	2990-01-420-9957	71	1
19207	12420876	6150-01-422-3450	72	1
0FW39	12420877	6150-01-421-3552	52	1
0FW39	12420879	6150-01-422-3453	77	4
0FW39	12420880	6150-01-422-3592	87	1
0FW39	12420881	6150-01-422-3459	83	1
19207	12420885-001		88	1
0FW39	12420887	6150-01-429-8189	104	1
0FW39	12420890-001	6150-01-422-3452	89	1
0FW39	12420891-001	6150-01-430-3540	76	1
0FW39	12420892	6150-01-420-9200	81	1
19207	12420893	6150-01-420-9199	82	1
19207	12420894	6140-01-421-8216	69	11
19207	12420895	6140-01-421-8207	69	13
19207	12420896	6140-01-421-8203	69	26
19207	12420897		91	1
19207	12420898		92	1
19207	12420899		93	1
19207	12420899-001		272	18
19207	12420900		94	1
19207	12420901		95	1
19207	12420902		96	1
19207	12420904		97	1
19207	12420905		98	1
19207	12420906		99	1
19207	12420906-001		272	20
19207	12420907	6140-01-421-8220	69	10
19207	12420915-003	5999-01-420-7757	52	33
		5999-01-420-7757	53	37
		5999-01-420-7757	104	7
19207	12420924-001		BULK	68
19207	12420924-001X		88	13
19207	12420924-002X		88	5
19207	12420924-003X		88	6
0FW39	12420924-004	4720-01-421-9718	BULK	69
0FW39	12420924-005	4720-01-423-2962	BULK	70

CROSS REFERENCE INDEXES

PART NUMBER INDEX

FSCM	PART NUMBER	STOCK NUMBER	FIGURE NO	ITEM NO
19207	12420924-008		BULK	71
19207	12420937-002	5925-01-422-4745	52	75
		5925-01-422-4745	53	90
19207	12420937-003	5925-01-K64-0349	52	72
		5925-01-K64-0349	53	87
19207	12420937-004	5925-01-422-4743	52	73
		5925-01-422-4743	52	102
		5925-01-422-4743	53	88
19207	12420937-005	5925-01-422-4747	52	74
		5925-01-422-4747	53	89
19207	12420937-006	5925-01-422-4746	52	71
		5925-01-422-4746	53	86
19207	12420938-004	5925-01-422-4748	52	76
		5925-01-422-4748	53	91
0FW39	12420955		100	1
0FW39	12420958-007	6695-01-433-1897	182	25
19207	12420959-001	5325-01-420-6138	78	23
19207	12420959-002	5325-01-420-6001	78	17
19207	12420960	5340-01-420-5139	78	31
19207	12421149	5340-01-440-6733	3	4
19207	12421150	5340-01-440-7686	26	52
19207	12421151-001		192	6
19207	12421151-002	2510-01-375-8328	192	1
19207	12421152	2990-01-417-3198	249	4
19207	12421153	4710-01-439-9712	26	54
19207	12421154	2990-01-417-2745	249	14
0FW39	12421155	5330-01-295-0115	83	9
19207	12421158	5365-01-417-3812	253	12
19207	12421160-001		194	23
19207	12421160-002		194	6
19207	12421160-003		194	21
19207	12421160-004		194	3
19207	12421160-005		194	22
19207	12421160-006		194	5
19207	12421161	2540-01-439-5674	206	3
		2540-01-439-5674	207	8
19207	12421165	3020-01-439-6621	46	46
0FW39	12421167	4820-01-418-6393	189	24
19207	12421172-001	5340-01-430-2354	28	14
19207	12421174	5905-01-422-9203	57	2
19207	12421179-001	5340-01-426-7635	28	12
19207	12421180	4010-01-417-4529	253	14
19207	12421186-001	5999-01-423-5170	70	3
		5999-01-423-5170	272	25
19207	12421186-002	5975-01-422-7556	70	2
19207	12421186-003	5340-01-426-4418	58	5
		5340-01-426-4418	272	26
0FW39	12421188-001	4710-01-447-2936	28	10
0FW39	12421190-001	2930-01-370-2867	41	21
19207	12421191	5340-01-423-0897	172	11
19207	12421192	5340-01-423-0782	172	7
19207	12421195	4010-01-423-0974	253	17

CROSS REFERENCE INDEXES

PART NUMBER INDEX

FSCM	PART NUMBER	STOCK NUMBER	FIGURE NO	ITEM NO
19207	12421196	5340-01-423-0894	253	18
19207	12421244	4810-01-439-5567	264	35
19207	12421262	5340-01-442-1027	242	12
19207	12421263	5340-01-426-4653	251	10
19207	12421264-001	5365-01-433-8467	181	5
19207	12421264-002	5365-01-433-7233	181	22
19207	12421266	5940-01-422-3593	58	4
19207	12421267	5340-01-443-1390	247	1
19207	12421269	2590-01-417-1733	172	5
19207	12421284-089	5305-01-433-6842	186	13
19207	12421341-001		272	17
19207	12421341-002		272	15
19207	12421341-003		272	19
19207	12421341-004		272	16
19207	12421341-005		272	17
19207	12421341-006		272	15
19207	12421341-007		272	19
19207	12421341-008		272	16
19207	12421344	5340-01-438-8822	272	12
19207	12421345-001	5340-01-439-3756	272	28
19207	12421345-002	5340-01-439-0820	272	4
19207	12421349-001		272	29
19207	12421349-002		272	32
19207	12421355		216	1
19207	12421356		216	15
19207	12421357		216	5
19207	12421358		216	8
19207	12421359		216	18
19207	12421364		216	16
19207	12421366	5305-01-439-3247	181	27
19207	12421370	4730-01-440-4855	257	13
0FW39	12421379-001		26	4
	SB			
19207	12421379-002		138	1
19207	12421379-003		138	3
19207	12421379-004		41	18
0FW39	12421379-005		124	19
19207	12421380		26	3
19207	12421384-001		191	7
19207	12421384-002		191	6
19207	12421386	5340-01-439-3757	191	2
		5310-01-439-3757	195	20
		5340-01-439-3757	195	20
19207	12421386-001	5340-01-439-3758	191	2
		5340-01-439-3758	195	20
0FW39	12421387-001	5340-01-K65-1602	191	8
		5340-01-K65-1602	195	18
0FW39	12421387-002	5340-01-K65-1603	191	8
		5340-01-K65-1603	195	18
19207	12421387-003	5340-01-439-3246	195	18
19207	12421387-004	5340-01-439-3347	195	18
19207	12421402	5325-01-440-2178	40	6

CROSS REFERENCE INDEXES

PART NUMBER INDEX

FSCM	PART NUMBER	STOCK NUMBER	FIGURE NO	ITEM NO
19207	12421404		270	37
19207	12421405	6150-01-442-8572	270	31
19207	12421415	5340-01-442-2651	270	28
19207	12421416	6150-01-442-8571	270	27
0FW39	12421421		215	9
19207	12421435	5850-01-K64-9178	105	10
19207	12421437-001X		105	8
19207	12421437-002X		105	9
19207	12421442		268	44
19207	12421443		268	40
19207	12421451		272	13
19207	12421454		185	8
19207	12421456		172	41
19207	12421457		236	1
19207	12421458		236	16
19207	12421459	5365-01-439-9017	249	5
0FW39	12421469		61	2
			230	7
19207	12421497-001		225	12
19207	12421497-002		225	10
19207	12421499		218	26
			219	3
			220	20
19207	12421503		211	1
19207	12421504-001		266	52
19207	12421504-002		266	56
19207	12421504-003		266	60
19207	12421504-004		266	64
19207	12421505		231	1
0FW39	12421506-001		226	8
0FW39	12421506-002		226	12
0FW39	12421506-003		226	10
0FW39	12421506-004		226	11
0FW39	12421506-005		226	7
0FW39	12421506-006		226	1
19207	12421507-001		226	9
19207	12421507-002		226	15
19207	12421507-003		226	14
19207	12421507-004		226	13
19207	12421507-005		226	2
19207	12421508		225	44
19207	12421509-001		224	14
19207	12421509-002		224	9
19207	12421509-003		224	13
19207	12421509-004		224	10
19207	12421509-005		224	12
19207	12421509-006		224	11
19207	12421509-007		224	8
19207	12421509-008		224	2
19207	12421509-009		224	7
19207	12421509-010		224	4
19207	12421509-011		224	6

CROSS REFERENCE INDEXES

PART NUMBER INDEX

FSCM	PART NUMBER	STOCK NUMBER	FIGURE NO	ITEM NO
19207	12421509-012		224	5
19207	12421510		235	17
19207	12421512		213	17
19207	12421514		219	26
19207	12421515		219	24
19207	12421516		219	43
19207	12421519-001		213	23
19207	12421519-002		213	11
19207	12421519-005		213	12
19207	12421519-006		213	14
19207	12421519-007		213	10
19207	12421519-008		213	8
19207	12421519-009		213	7
19207	12421519-010		213	16
19207	12421519-011		213	24
19207	12421519-015		213	13
19207	12421519-016		213	15
19207	12421519-018		213	22
19207	12421521		219	19
19207	12421524		219	9
19207	124215-25		219	2
19207	12421529-002		225	31
19207	12421529-003		225	28
19207	12421529-004		229	2
19207	12421529-005		229	5
19207	12421529-006		225	30
19207	12421529-007		225	39
19207	12421529-008		225	3
19207	12421529-009		225	11
19207	12421529-010		225	4
19207	12421529-011		225	25
19207	12421529-012		225	24
19207	12421538		266	13
19207	12421539		266	10
19207	12421551		233	5
19207	12421565		231	19
19207	12421568		229	8
19207	12421569		266	2
19207	12421573		215	1
19207	12421580		219	1
19207	12421589		225	41
19207	12421590-001		266	19
19207	12421590-002		266	22
19207	12421590-003		266	18
19207	12421599		266	7
19207	12421601		266	15
19207	12421602		266	3
19207	12421608		235	15
19207	12421644		215	8
19207	12421651-001		220	4
19207	12421653		215	24
19207	12421655		214	5

CROSS REFERENCE INDEXES

PART NUMBER INDEX

FSCM	PART NUMBER	STOCK NUMBER	FIGURE NO	ITEM NO
19207	12421656		235	1
19207	12421659		235	4
19207	12421662-001		228	3
19207	12421662-002		228	1
0FW39	12421663-002		BULK	72
19207	12421663-002X		225	34
19207	12421664-001		225	33
0FW39	12421665-001		233	10
19207	12421678		266	11
19207	12421681		227	13
19207	12421682		227	5
19207	12421685		213	5
19207	12421687		234	1
19207	12421689		234	12
19207	12421690		234	3
19207	12421697-001	5306-01-K65-4335	163	17
		5306-01-K65-4335	164	5
19207	12421697-002		163	20
			164	20
19207	12421697-003	5306-01-K65-4337	41	11
		5306-01-K65-4337	163	10
		5306-01-K65-4337	164	12
19207	12421697-004	5306-01-K65-4338	163	9
		5306-01-K65-4338	164	11
0FW39	12421721		245	6
0FW39	12421723 0	4810-01-418-0299	264	32
0FW39	12421754		192	3
			193	3
0FW39	12421779		264	18
0FW39	12421781		53	1
0FW39	12421783-001		75	1
0FW39	12421783-002		75	1
19207	12421784	4710-01-370-1139	28	5
0FW39	12421786		107	1
0FW39	12421787		108	1
19207	12421792		271	18
19207	12421820		282	3
0FW39	12421825		75	4
19207	12421832-001		53	63
19207	12421832-002		53	60
0FW39	12421832-003		75	3
19207	12421833		53	62
			75	7
0FW39	12421834		53	59
			75	10
0FW39	12421836		53	20
			75	9
19207	12421837		53	61
			75	8
0FW39	12421838		53	58
			75	11

CROSS REFERENCE INDEXES

PART NUMBER INDEX

FSCM	PART NUMBER	STOCK NUMBER	FIGURE NO	ITEM NO
19207	12421839		53	19
19207	12421840		53	22
19207	12421841		53	21
19207	12421842		53	18
19207	12421844		53	42
19207	12421845		53	41
19207	12421846		53	44
19207	12421847		53	43
19207	12421890-001		124	11
19207	12421891-001		124	22
0FW39	12421972		85	1
19207	12422053		282	9
19207	12422054		282	10
19207	12422055		282	7
19207	12422058		282	2
19207	12422059-001		282	5
19207	12422059-002		282	6
19207	12422073		207	7
19207	12422103		206	2
0FW39	12422254		235	11
0FW39	12422274		266	24
0FW39	12422289		266	23
78500	1246D342	5315-00-597-2723	130	35
		5315-00-597-2723	132	35
11083	125-8274	5330-01-360-6012	25	4
93061	125HBL-4-4	4730-00-200-0531	41	26
78500	1250-E-473	5365-01-180-2369	129	11
		5365-01-180-2369	131	8
78500	1250T1086	2530-01-364-4602	129	20
		2530-01-364-4602	131	2
0TE27	12510-6	4730-01-372-4862	150	11
19200	12524631-1	5310-01-115-0762	3	11
		5310-01-115-0762	36	28
		5310-01-115-0762	43	20
		5310-01-115-0762	55	2
		5310-01-115-0762	57	3
		5310-01-115-0762	102	15
		5310-01-115-0762	106	2
		5310-01-115-0762	153	19
		5310-01-115-0762	183	6
		5310-01-115-0762	186	14
		5310-01-115-0762	189	6
		5310-01-115-0762	199	1
		5310-01-115-0762	200	4
		5310-01-115-0762	241	6
		5310-01-115-0762	241	6
		5310-01-115-0762	242	9
		5310-01-115-0762	254	25
		5310-01-115-0762	257	40
		5310-01-115-0762	258	7
		5310-01-115-0762	263	11
		5310-01-115-0762	283	13

CROSS REFERENCE INDEXES

PART NUMBER INDEX

FSCM	PART NUMBER	STOCK NUMBER	FIGURE NO	ITEM NO
0EJ14	12543	4810-01-375-1207	237	31
11083	126-5874	2815-01-430-3787	8	22
0SHR6	126E00002		219	39
0SHR6	126E00003		219	42
0SHR6	126E00004		219	38
0SHR6	126E00005		219	40
0SHR6	126S00006		219	37
93019	12650 REV C	2530-01-377-3127	159	7
45225	12692	5360-01-300-1188	247	56
0EJ14	1270	5305-01-347-5242	237	39
0EJ14	12706	3040-01-375-3755	237	63
0EJ14	12719	3040-01-375-1571	237	21
0EJ14	12726	3040-01-376-4546	237	48
0EJ14	12729	3010-01-374-7584	237	66
0EJ14	12730	3010-01-375-2123	237	62
0EJ14	1279-P	5305-01-345-1702	237	38
93019	12877-KL		159	8
30327	129-B-08X24	4730-00-407-0571	136	5
		4730-00-407-0571	139	1
		4730-00-407-0571	146	8
		4730-00-407-0571	285	6
0EJ14	12930	3020-01-399-0840	237	73
84256	13-4CD	5325-01-386-8186	168	5
		5325-01-386-8186	169	3
		5325-01-386-8186	170	1
		5325-01-386-8186	172	28
		5325-01-386-8186	189	29
		5325-01-386-8186	212	3
		5325-01-386-8186	216	13
		5325-01-386-8186	238	16
		5325-01-386-8186	253	7
0SHR6	13S00012		222	22
			223	23
0EJ14	1309	5305-01-414-3650	237	69
18876	13142983-22/11	5306-01-281-0554	122	18
0EJ14	13148	3020-01-413-0077	237	59
0EJ14	13160	3040-01-413-3829	237	57
0EJ14	13161	3040-01-413-3889	237	68
0EJ14	13162	6105-01-398-1913	237	8
62380	132.748	2590-01-K62-5443	260	23
0EJ14	13247	3950-01-413-3666	237	53
06721	1325530		85	17
0EJ14	13260	5315-01-446-5592	237	76
0EJ14	13261	3040-01-399-0842	237	72
0EJ14	13262	5975-01-398-6915	237	77
0EJ14	13263	5975-01-398-6914	237	78
0SHR6	135P00002		222	14
			223	14
0SHR6	135S00003	2510-01-412-3855	222	13
0SHR6	135S00005		223	12
27647	13521	5945-01-397-2744	275	4
62380	136.190	5340-01-417-7793	260	10

CROSS REFERENCE INDEXES

PART NUMBER INDEX

FSCM	PART NUMBER	STOCK NUMBER	FIGURE NO	ITEM NO
62380	136.204	5340-01-180-8594	260	24
0SHR6	136P00002		222	17
0SHR6	136P00003		222	15
0SHR6	136P00004		223	18
0SHR6	136P00005		223	15
0SHR6	137P00002		222	19
			223	20
0SHR6	137S00003		222	18
			223	19
0EJ14	1376	5305-01-163-6473	237	46
27647	13799	2530-01-397-5308	276	17
0SHR6	138P00002		222	7
			223	4
27647	13826	3120-01-306-3577	276	8
27647	13830	3040-01-399-6250	276	16
27647	13831	3120-01-322-0469	276	13
27647	13839	3020-01-209-4603	276	5
27647	13848	5330-01-211-0717	276	3
27647	13850	5305-01-211-3101	276	1
27647	13874	3020-01-209-4606	276	4
0EJ14	1388	5310-01-162-5737	237	47
0SHR6	139P00002		222	11
0SHR6	139P00003		222	9
0SHR6	139P00004		223	11
0SHR6	139P00005		223	6
45225	13938	5360-01-300-1187	247	67
0EJ14	1395	5310-01-166-3657	237	61
11757	14-9-49	5365-01-043-7954	239	56
06383	14-14F	5940-01-053-0654	266	68
30780	14C		266	37
11757	14P15	5310-00-238-7560	239	11
62380	140.708	4330-01-439-0032	260	14
62380	140.716	2910-01-K62-5428	260	15
0EJ14	1402	5305-01-344-3859	237	43
11862	14028922	5306-01-149-6278	257	25
10001	1404491	6685-00-618-1822	255	4
		6685-00-618-1822	256	4
0SHR6	141P00075		222	4
29944	14117	5305-01-433-8406	201	16
0PFG7	14121	5330-01-416-9966	247	69
29944	14134	5365-01-433-1913	201	17
		5365-01-433-1913	202	19
		5365-01-433-1913	203	19
73342	141445	5305-01-360-2854	120	21
29944	14155	5305-01-348-8922	202	17
		5305-01-348-8922	203	15
0SHR6	142P00160		222	33
			223	35
0SHR6	142P00161		222	42
0SHR6	142P00618		223	39
29944	14219	5310-01-367-1804	201	15
		5310-01-367-1804	202	23

CROSS REFERENCE INDEXES

PART NUMBER INDEX

FSCM	PART NUMBER	STOCK NUMBER	FIGURE NO	ITEM NO
		5310-01-367-1804	203	16
45225	14265	4320-01-301-8429	247	57
26405	1432563-CU	2920-01-436-9862	272	21
55752	14339	2990-01-441-1649	257	43
93061	144F-6	4730-00-287-1701	268	3
27647	14401	2590-01-185-7949	276	6
27647	14402	3010-01-397-8592	276	7
0PFG7	14456	5305-01-416-6665	247	81
24617	145651	3110-00-100-6170	113	17
11083	146-7477		17	5
79470	1468X6X6	4730-01-096-9128	138	32
		4730-01-096-9128	141	12
		4730-01-096-9128	150	13
		4730-01-096-9128	153	15
		4730-01-096-9128	268	23
79470	1468X8	4730-01-091-8032	137	5
		4730-01-091-8032	149	15
		4730-01-091-8032	151	16
		4730-01-091-8032	152	11
		4730-01-091-8032	153	10
79470	1469X4X4	4730-01-086-4064	137	18
		4730-01-086-4064	138	12
		4730-01-086-4064	139	30
		4730-01-086-4064	247	20
62380	147.044	5310-01-395-7646	260	77
62380	147.834	5305-01-395-0822	265	9
0SHR6	147P00039		222	28
			223	30
0SHR6	147P00040		222	6
			223	3
0SHR6	147P00041		222	8
0SHR6	147P00131		223	5
79470	1472X8	4730-01-119-6895	139	13
62380	148.210	5305-01-395-0821	265	22
62380	148.245	5305-12-126-8925	260	54
62380	149.314	5365-01-244-6364	260	21
93061	149-F-6-4	4730-00-902-8991	146	3
0EJ14	1495	5310-01-161-2527	237	44
0PFG7	14972	4730-01-416-6801	247	31
0EJ14	1498	5310-01-161-7311	237	45
62380	150.754	4730-01-211-1836	260	85
		4730-01-211-1836	265	37
01276	1503-4	4720-00-836-7189	BULK	73
98343	1509	5330-00-172-1919	135	4
		5330-00-172-1919	135	7
		5330-00-172-1919	136	11
		5330-00-172-1919	136	14
62380	151.157	5330-01-244-6375	260	20
		5330-01-244-6375	265	36
93061	151F-6-4	4730-01-008-7827	146	7
11873	15195	2920-01-388-5639	52	62
		2920-01-388-5639	53	76

CROSS REFERENCE INDEXES

PART NUMBER INDEX

FSCM	PART NUMBER	STOCK NUMBER	FIGURE NO	ITEM NO
62380	152.269	5310-01-407-4764	260	19
		5310-01-407-4764	265	18
62380	152.544	5310-01-395-0823	260	91
		5310-01-395-0823	265	14
62380	152.552	5310-01-395-0825	265	10
62380	152.560	5310-01-285-4017	260	55
		5310-01-285-4017	265	45
62380	152.595	5310-01-395-7647	260	32
0PFG7	15426	4730-01-416-6795	247	78
0PFG7	15459	4310-01-417-2228	247	25
0SHR6	155P00003		222	20
			223	21
11862	15567924	5340-01-269-1361	36	16
0SHR6	157P00003		222	16
0SHR6	157P00013		223	16
45152	1588570	5930-01-292-6730	50	5
		5930-01-292-6730	51	6
		5930-01-292-6730	78	26
93061	159F-4-4	4730-01-283-8150	139	20
		4730-01-283-8150	268	8
24617	15961524		36	29
24617	15961525		36	30
81343	16-16 430260B		41	24
81343	16-16 430360B		41	24
73634	16037	5310-01-417-3814	172	119
0PFG7	16448	5360-01-416-3101	247	43
59150	1675-013	2920-01-390-3590	26	21
58275	1690071	3110-00-100-3532	239	9
1T176	16998	5310-01-435-1736	69	6
09990	17004-34		249	26
78500	1729B262	5310-00-964-7811	133	13
		5310-00-964-7811	134	17
24234	173048	2540-01-421-4592	245	50
0PFG7	17428	5305-01-416-6668	247	77
59150	1755-725	2940-01-372-1541	286	2
62380	176.494	5340-01-395-0141	265	43
62380	176.591	5935-01-178-7303	260	71
59150	1775-822	4720-01-375-3594	26	22
		4720-01-375-3594	286	1
62380	178.624	5995-01-212-7561	260	28
		5995-01-212-7561	265	7
62380	178.713	5940-01-209-8933	260	75
62380	178.802	5935-01-212-7127	260	13
71286	18L01-1-1AA	5325-01-441-7650	258	3
0SHR6	180P00002		222	32
			223	33
0SHR6	180P00003		222	41
0SHR6	180P00004		222	44
0SHR6	180P00008		223	37
0SHR6	180P00010		223	42
0SHR6	180S00007		222	31
			223	32

CROSS REFERENCE INDEXES

PART NUMBER INDEX

FSCM	PART NUMBER	STOCK NUMBER	FIGURE NO	ITEM NO
0SHR6	180S00009		223	36
0SHR6	180S00011		223	41
03956	1805607-40	5935-01-293-5988	52	34
		5935-01-293-5988	53	38
		5935-01-293-5988	104	6
78500	1850T 124	4730-01-391-0769	129	52
		4730-01-391-0769	131	39
84256	19-8CD	5325-01-436-6556	187	8
		5325-01-436-6556	216	11
84256	19-9CD		253	9
75755	19M7662	5305-01-330-8496	45	27
75755	19M7668	5305-01-330-7575	127	84
75755	19M7866	5306-01-326-4911	268	20
75755	19M8029	5305-01-329-7038	109	4
78500	19X1067	5315-01-391-2792	129	32
		5315-01-391-2792	131	19
45152	1913570	5930-01-344-7571	51	17
82484	192.518	4730-01-374-2959	240	1
0SHR6	193P00009		222	37
0B832	1946	5999-01-372-4231	102	9
0PFG7	19775	5330-01-415-9632	247	41
16764	1993991	2920-01-375-5830	47	1
19220	2-M6252-X	3020-01-043-0193	182	27
11757	2-P-458	3020-01-371-8206	239	58
11757	2-P-682	4730-01-386-6634	239	52
81343	2-130109NS		56	4
12361	2-195-1-00647	5985-01-394-4637	274	7
12361	2-195-1-00648	3040-01-411-5535	277	10
12361	2-195-1-00649	3040-01-395-7279	277	23
12361	2-195-1-00650	5340-01-394-2397	277	28
12361	2-195-1-00651	5925-01-411-1031	277	29
12361	2-195-3-00501		274	6
12361	2-195-9-00576		279	2
12361	2-195-9-00577		279	1
12361	2-195-9-00578	2510-01-443-4585	274	4
12361	2-195-9-00579	3950-01-368-7724	274	12
12361	2-195-9-00580	3040-01-368-8300	279	13
12361	2-195-9-00581	3040-01-368-8299	279	9
12361	2-195-9-00582	4010-01-367-9102	279	4
81343	2-2 140138C	4730-01-071-2859	26	9
81343	2-2-2 060401BA	4730-00-278-6242	35	12
81343	2-2-2 130438B	4730-00-719-2708	189	26
02697	2-210N674-7	5330-00-406-0883	177	5
45152	2AA855	5340-01-270-8588	70	5
		5340-01-270-8588	78	11
		5340-01-270-8588	102	1
45152	2AW725	5310-01-158-9053	178	2
		5310-01-158-9053	264	3
92026	2B	5340-00-847-0102	221	16
45152	2BG782	5945-01-217-3325	260	95
		5945-01-217-3325	265	40
45152	2CX333	5305-01-230-1659	239	21

CROSS REFERENCE INDEXES

PART NUMBER INDEX

FSCM	PART NUMBER	STOCK NUMBER	FIGURE NO	ITEM NO
11083	2D7325	4730-00-177-6166	12	29
45152	2HE692	6240-01-420-8320	59	11
11083	2M4453	5330-00-074-3768	44	10
11083	2M6471	5340-00-410-6762	4	6
		5340-00-410-6762	5	3
11083	2M9780	5330-00-939-0687	5	13
		5330-00-939-0687	16	11
		5330-00-939-0687	20	4
11083	2W0027	3120-01-360-5287	9	6
11083	2W6544	5340-01-360-1220	12	21
11083	2W7211	3120-01-361-1161	11	7
11083	2W7212	5330-01-347-3206	43	4
11083	2W7213	3120-01-360-7529	11	6
11083	2W7381	3040-01-361-2508	7	2
11083	2W7565	3040-01-361-2505	10	4
11083	2W7566	3120-01-360-5285	10	3
11083	2W8147	3020-01-360-6390	6	6
11083	2W8476	3020-01-361-2409	10	2
11083	2W9128	2815-01-360-6535	9	5
11083	2Y5829	5310-01-359-9329	14	3
81343	20-20 070320C	4730-00-420-4441	252	40
78500	20X1577	5306-01-363-1737	129	45
		5306-01-363-1737	131	32
78500	20X1578	5306-01-363-1749	129	45
		5306-01-363-1749	131	32
78500	20X2122	5305-01-362-4345	129	41
		5305-01-362-4345	131	28
78500	20X2123	5305-01-362-4344	129	41
		5305-01-362-4344	131	28
24234	200943	5305-01-421-6046	245	16
06721	201047-AA		285	47
06721	201051-A		285	39
06721	201054-A		285	28
06721	201089-G		285	46
06721	201117		285	45
24234	201870	5305-01-420-3756	245	12
0PFG7	202568	4820-01-421-3402	247	39
0PFG7	202613	5340-01-417-9898	247	66
0PFG7	202624	5330-01-417-7794	247	70
0FPG7	205674	5305-01-417-1174	247	51
45225	205679	5360-01-300-1191	247	50
24234	206057	5320-01-411-0081	245	57
01276	2062-12-20S	4730-01-184-6834	252	38
93061	207ACBH-4	4730-01-164-3365	266	34
93061	207ACBH-6	4730-00-511-1677	135	12
		4730-00-511-1677	137	9
		4730-00-511-1677	138	36
		4730-00-511-1677	150	10
		4730-00-511-1677	151	3
		4730-00-511-1677	152	15
		4730-00-511-1677	153	11
		4730-00-511-1677	268	21

CROSS REFERENCE INDEXES

PART NUMBER INDEX

FSCM	PART NUMBER	STOCK NUMBER	FIGURE NO	ITEM NO
93061	207ACBHS-4	4730-01-245-6925	137	19
		4730-01-245-6925	138	38
		4730-01-245-6925	139	18
		4730-01-245-6925	152	12
93061	209P-8-4	4730-01-348-6542	138	13
27647	2090	5975-01-135-9794	276	22
11757	21-P-482	3040-01-362-3515	239	33
75755	21M7285	5305-01-332-0106	245	24
K50754	21094	3120-99-730-3539	247	42
55752	21104	5355-01-364-8643	34	8
0PFG7	211054	5305-01-417-1175	247	58
0PFG7	211082	3040-01-417-2271	247	65
55156	2111B	5945-01-423-5549	58	1
11721	212-44		269	7
11721	212-5BH-P		269	5
11721	212-55		269	4
04368	21237LF	5306-01-377-1544	163	23
		5306-04-377-1544	164	27
		5306-01-377-1544	207	22
45225	21278-40	4820-01-418-6390	247	32
62380	21324A	5340-01-411-0870	260	8
0PFG7	214578	2910-01-417-6189	247	46
0PFG7	214586	5325-01-416-8895	247	47
62380	215.171	4520-01-214-4315	260	79
		4520-01-214-4315	265	50
78500	216N14-5A		128	5
			128	8
15434	219296	5340-01-163-7118	247	29
62380	219.495	2990-12-336-2740	KITS	
11757	22-P-53 NON-ASBE STOS	5330-01-382-9753	239	35
11757	22-P-92	5330-01-361-6962	239	20
0TE27	22BH-4-4	4730-01-381-3844	264	19
78500	2203-K-9761		130	29
			132	29
78500	2203-L-9762		130	29
			132	29
78500	2203J9500	5365-01-362-6151	129	31
		5365-01-362-6151	131	18
78500	2203K9501	5365-01-362-6152	129	31
		5365-01-362-6152	131	18
78500	2203L9502	5365-01-362-6153	129	31
		5365-01-362-6153	131	18
78500	2203M9503	5365-01-362-5013	129	31
		5365-01-362-5013	131	18
78500	2203N9504	5365-01-362-5014	129	31
		5365-01-362-5014	131	18
78500	2203Q9845	5365-01-362-6148	129	21
78500	2203R9846	5365-01-362-6149	129	21
78500	2203S9847	5365-01-362-6150	129	21
78500	2206D1018	4730-01-362-5652	129	42
		4730-01-362-5652	131	29

CROSS REFERENCE INDEXES

PART NUMBER INDEX

FSCM	PART NUMBER	STOCK NUMBER	FIGURE NO	ITEM NO
78500	2214H1100	3110-01-362-4302	130	4
		3110-01-362-4302	132	4
24234	222644	6240-01-420-7268	245	21
24234	222677	6150-01-422-5660	245	31
24234	222796	5930-01-424-5755	245	20
78500	2233E1123	3020-01-363-2414	130	13
		3020-01-363-2414	132	13
78500	2233J1102	3020-01-363-8104	129	50
		3020-01-363-8104	131	37
55752	22333		34	6
78500	2234E1201	3020-01-363-8103	129	30
		3020-01-363-8103	131	17
78500	2234F1202	3020-01-363-2415	129	28
		3020-01-363-2415	131	15
78500	2234Q1265	3020-01-363-2413	130	11
		3020-01-363-2413	132	11
35510	225087	6150-01-333-9318	47	5
35510	225322S		47	33
78500	2257-M-1001	5340-01-292-5552	133	19
		5340-01-292-5552	134	21
78500	2297-A-5331	2530-01-330-5049	133	10
		2530-01-330-5049	134	12
78500	2297-M-4823		133	10
			134	12
78500	2297N3888	2530-01-181-3621	130	22
		2530-01-181-3621	132	22
60038	2297P3838	2530-01-363-3764	129	44
		2530-01-363-3764	131	31
78500	2297R6648	5330-01-362-4993	129	37
		5330-01-362-4993	131	24
73342	23014057	5330-01-360-6016	122	37
73342	23015799	3110-00-557-6163	127	73
73342	23019664	5330-01-361-0235	122	94
		5330-01-361-0235	127	102
73342	23042198	2520-01-361-0567	127	51
73342	23042433	5330-01-360-7516	113	11
		5330-01-360-7516	117	8
73342	23042434	5330-01-360-5459	121	5
73342	23043446	5330-01-424-6629	122	95
		5330-01-424-6629	122	99
		5330-01-424-6629	127	32
73342	23045573	2520-01-361-0596	120	15
73342	23045582	3120-01-360-7779	121	7
73342	23045586	2510-01-360-8092	121	19
73342	23045588	2520-01-360-6319	121	24
73342	23045589	2520-01-360-6499	121	25
73342	23045611	5330-01-360-9099	121	11
73342	23045612	5330-01-360-9100	121	12
73342	23045613	5330-01-360-9101	121	13
73342	23045614	5330-01-360-9102	117	7
		5330-01-360-9102	121	17
73342	23045615	5330-01-360-9103	121	21

CROSS REFERENCE INDEXES

PART NUMBER INDEX

FSCM	PART NUMBER	STOCK NUMBER	FIGURE NO	ITEM NO
73342	23045618	5325-01-360-0964	121	22
73342	23045654	5330-01-360-9104	119	4
73342	23045655	5330-01-360-9105	119	5
73342	23045657	5325-01-360-0965	119	1
73342	23045812	5365-01-359-9402	113	9
73342	23045816	3110-01-360-7503	113	12
73342	23045918	3110-01-360-7492	109	29
73342	23046228	5310-01-360-1064	109	10
73342	23046236	2520-01-361-5191	109	15
73342	23046274	5330-01-360-6018	121	2
73342	23046291	5325-01-360-0963	121	16
73342	23046354	5315-01-360-5914	122	92
73342	23046376	5330-01-360-6006	122	12
73342	23046439	3110-01-360-7743	117	9
73342	23046868	2835-01-360-1757	109	14
73342	23047102	2520-01-388-4778	117	19
73342	23047219	2520-01-361-8280	121	23
73342	23047834	3110-01-360-7490	113	10
73342	23047854	3120-01-360-7540	114	3
		3120-01-360-7540	121	9
73342	23048037	5330-01-360-7520	117	15
73342	23048038	5340-01-360-1048	117	16
73342	23048044	3040-01-360-4449	117	6
73342	23048133	2520-01-361-0601	121	20
73342	23048146	3120-01-360-7531	117	5
73342	23048367	2520-01-361-0600	120	12
73342	23048530	2520-01-361-0745	121	30
73342	23048628	2520-01-361-0597	121	29
73342	23048692	2520-01-360-6325	121	14
73342	23048735	2520-01-361-3969	127	75
73342	23049304	5945-01-360-5163	122	22
		5945-01-360-5163	122	71
73342	23049306	5945-01-360-5162	122	35
73342	23049307	5315-01-360-6729	122	6
		5315-01-360-6729	122	38
		5315-01-360-6729	122	45
73342	23049312	4820-01-361-1924	122	65
73342	23049315	4820-01-360-2355	122	59
73342	23049316	4820-01-360-6160	122	64
73342	23049317	4820-01-360-4408	122	86
73342	23049318	4820-01-360-6162	122	82
73342	23049320	4820-01-360-6161	122	81
73342	23049321	4820-01-360-2354	122	43
73342	23049325	5360-01-359-7949	122	69
73342	23049326	5360-01-359-7946	122	60
73342	23049327	5360-01-359-7947	122	63
73342	23049329	5360-01-359-7953	122	85
73342	23049332	5360-01-359-7945	122	42
73342	23049337	5340-01-359-8850	122	61
73342	23049338	5340-01-359-8851	122	62
73342	23049339	5340-01-360-1076	122	87
73342	23049340	5340-01-359-8854	122	84

CROSS REFERENCE INDEXES

PART NUMBER INDEX

FSCM	PART NUMBER	STOCK NUMBER	FIGURE NO	ITEM NO
73342	23049341	5340-01-359-9416	122	78
73342	23049342	5340-01-360-1075	122	79
73342	23049343	5340-01-359-8849	122	41
73342	23049345	5340-01-360-5983	122	57
73342	23049372	5315-01-360-4771	122	46
73342	23049376	4320-01-361-5145	113	5
73342	23049377	5330-01-361-9052	109	31
73342	23049381	5310-01-359-8760	109	7
73342	23049391	5360-01-359-7951	122	80
35510	2313	5310-01-106-9929	47	24
0EJ14	2319	5360-01-225-9676	237	18
27647	23195	5305-01-397-5912	276	15
0SHR6	232W08038		222	27
			223	28
0SHR6	232W08050		222	24
			223	25
0EJ14	2322	5360-01-345-5384	237	15
0SHR6	233W08075		219	36
			222	45
			223	43
2E480	23433	5940-01-374-9839	52	97
		5940-01-374-9839	53	113
56329	2418974-1	5330-01-257-1709	BULK	74
24234	243105	2590-01-421-5159	245	22
35510	2434	5310-00-775-5139	47	25
0SHR6	245W10063		222	21
			223	22
0H7H2	2467.263	5355-01-378-3348	158	19
62380	248.401	5945-01-406-2360	260	37
0TLH4	25-05	5315-01-343-7322	238	15
11721	250-33-A		269	3
0PFG7	250192	5330-01-417-5105	247	55
09990	25110-02	4730-01-428-9693	249	39
09990	25110-03	2990-01-444-3688	249	38
0PFG7	251216	5330-01-417-5107	247	80
0PFG7	251217	5330-01-417-5104	247	26
0PFG7	251391	5310-01-417-1041	247	49
09990	25146-19	4820-01-428-9696	249	40
0PFG7	251507	6680-01-417-3362	247	22
56501	2521	5975-00-296-1669	281	13
09990	25228-01	4820-01-417-2268	249	32
09990	25228-02	4820-01-417-2267	249	31
35510	2523	5310-00-775-5182	47	21
27647	25523	3010-01-397-8591	276	9
27647	25530	5340-01-409-0209	275	5
27647	25531	3830-01-397-7048	275	3
27647	25534	5340-01-367-9191	274	8
01276	2556-06-0272	4720-01-363-2245	29	35
00624	2565-6	4720-00-278-4892	BULK	75
01276	2565-8	4720-00-670-6037	BULK	76
27647	25729	4010-01-369-3206	274	16
27647	25745	3950-01-399-4205	276	14

CROSS REFERENCE INDEXES

PART NUMBER INDEX

FSCM	PART NUMBER	STOCK NUMBER	FIGURE NO	ITEM NO
81860	25920-1	5340-01-371-7258	188	17
81860	25921-1	5340-01-432-9161	188	19
81860	25922	5340-01-372-5619	26	39
		5340-01-372-5619	204	6
81860	25923	5340-01-374-0501	111	1
81860	25926	5340-01-371-7973	188	21
81860	25950	5340-01-372-0382	174	5
81860	25951-1	5340-01-370-0643	179	2
81860	25952-1	5340-01-369-0893	179	6
06721	26W31008		285	35
78500	26X1024	5305-01-439-3258	129	6
62380	260.487	5330-01-157-6233	260	96
		5330-01-157-6233	265	38
62380	260.738	5330-01-244-6374	260	90
		5330-01-244-6374	265	61
81860	26112	5340-01-382-5021	2	10
28527	2616950G001	5310-00-615-1556	266	31
0SHR6	263W08050		222	40
17875	265	5310-01-271-5758	155	35
62380	26553A	2990-01-397-2316	265	81
98624	266AH	4710-01-422-5575	30	26
16236	269013000000	2540-01-076-9286	257	28
62380	270.903	5325-01-244-6382	260	60
0SHR6	270W10000		222	29
			223	29
93061	271NTA-8-8	4730-01-363-4266	138	20
93061	272NTA-8-6	4730-01-119-6895	152	16
93061	272NTA-8-8	4730-01-300-9031	138	19
62380	273.473	6110-01-394-5707	260	51
		6110-01-394-5707	265	65
62380	273.481	5305-01-244-6246	260	52
		5305-01-244-6246	265	66
62380	274.313	2540-01-244-6244	260	73
		2540-01-244-6244	265	47
62380	275.476	4710-01-209-3454	260	83
		4710-01-209-3454	265	59
62380	275.611	2990-12-185-7332	260	59
78500	2758W127	5360-00-482-4422	133	15
		5360-00-482-4422	134	19
62380	276.456	5340-01-395-1245	265	67
11757	276XMFJX-D5XK	2520-01-362-3573	239	8
01276	2766-8	4720-00-930-4515	BULK	77
62380	277.150	5305-01-397-0299	265	31
62380	277.282	5305-01-395-0145	260	92
		5305-01-395-0145	265	55
62380	277.479	5340-01-395-1261	260	62
62380	278.971	5340-01-394-7386	260	72
		5340-01-394-7386	265	46
27647	27863		276	2
27647	27882	5310-01-398-1126	275	8
62380	279.110	5305-01-244-6386	260	44
		5305-01-244-6386	265	75

CROSS REFERENCE INDEXES

PART NUMBER INDEX

FSCM	PART NUMBER	STOCK NUMBER	FIGURE NO	ITEM NO
11757	28-P-119	5330-01-044-6592	239	28
11757	28-P-120	5330-00-832-9514	239	40
11757	28-P-121	5330-01-064-6284	239	43
11757	28-P-190	5330-01-443-8050	239	15
11757	28-P-191	5330-01-361-6959	239	13
96879	28-P-192	5330-00-483-2296	239	31
96879	28-P-193	5330-00-483-2296	239	25
78500	2803-A-2783		130	29
			132	29
78500	2803-B-2784		130	29
			132	29
78500	2803-C-2785		130	29
			132	29
78500	2803-D-2786		130	29
			132	29
78500	2803-E-2787		130	29
			132	29
78500	2803-G-2763		130	33
			132	33
78500	2803-H-2764		130	33
			132	33
78500	2803-J-2766		130	33
			132	33
78500	2803-S-2775		130	29
			132	29
78500	2803-T-2776		130	29
			132	29
78500	2803-U-2777		130	29
			132	29
78500	2803-V-2778		130	29
			132	29
78500	2803-W-2779	5365-01-406-9213	130	29
		5365-01-406-9213	132	29
78500	2803-X-2780		130	29
			132	29
78500	2803-Y-2781		130	29
			132	29
78500	2803-Z-2782		130	29
			132	29
24234	280375	2540-01-421-8753	245	47
01276	2807-10	4720-00-898-5108	BULK	78
01276	2807-4	4720-00-254-5957	BULK	79
45225	28183	4320-01-301-8091	247	52
45225	28239	5330-01-300-1216	247	60
27647	28326	5305-01-397-5913	275	2
0PFG7	28400	2530-01-418-3385	247	64
27647	28515	2590-01-397-5305	275	10
27647	28519	2590-01-368-1119	274	2
27647	28572	6150-01-397-4819	275	6
27647	28573	6150-01-397-4820	275	7
27647	28579	5340-01-398-8683	275	9
62380	286.303	4320-01-K62-5455	260	65

CROSS REFERENCE INDEXES

PART NUMBER INDEX

FSCM	PART NUMBER	STOCK NUMBER	FIGURE NO	ITEM NO
62380	286.354	2510-01-244-6240	260	56
27647	28620	5340-01-397-0337	276	18
27647	28621	5340-01-397-0338	275	11
27647	28629	5360-01-398-6552	275	1
82484	288.457		54	5
82484	288.528		54	3
62380	288.640	5935-01-244-6425	260	49
62380	289.329	5340-01-395-1253	260	47
		5340-01-395-1253	265	74
24234	290214		245	48
24234	290247	5340-01-205-5809	245	23
24234	290267	4730-01-421-9633	245	34
27647	29467	6105-01-397-2828	276	21
27647	29468	3020-01-397-2324	276	10
27647	29470	2590-01-399-1404	275	12
27647	29471	3950-01-397-7047	276	12
73342	29500025	5310-01-359-8840	109	18
73342	29500034	5365-01-359-9336	122	96
		5365-01-359-9336	122	98
		5365-01-359-9336	127	31
73342	29500063	3110-01-360-7501	109	27
73342	29500064	5360-01-360-2023	109	26
73342	29500066	5310-01-360-1065	109	24
73342	29500068	3120-01-361-5297	109	25
73342	29500571	3020-01-360-7953	115	12
73342	29500573	3020-01-361-0576	114	12
73342	29500616	5306-01-360-1970	109	33
73342	29500645	4730-01-360-6224	125	5
73342	29500655	2520-01-361-1090	109	16
73342	29500667	5305-01-359-9390	109	17
73342	29500687	3040-01-361-0756	121	27
73342	29500689	5325-01-359-9360	114	6
		5325-01-359-9360	115	9
		5325-01-359-9360	116	3
73342	29500699	5325-01-356-9359	114	2
		5325-01-356-9359	115	3
73342	29500708	3120-01-360-7780	121	32
73342	29500767	3020-01-360-7989	118	5
73342	29500768	3120-01-360-7543	109	21
		3120-01-360-7543	118	4
73342	29500822	5340-01-360-7812	122	56
73342	29500823	5340-01-360-5984	122	58
73342	29500824	5340-01-360-1066	36	25
73342	29500867	2520-01-361-0603	119	2
73342	29500870	4820-01-360-9096	127	95
73342	29500871	5360-01-360-1951	127	96
73342	29500872	5340-01-360-1078	127	97
73342	29500873	5315-01-360-5916	127	92
73342	29500888	5945-01-360-2771	122	8
		5945-01-360-2771	127	86
73342	29500908	3120-01-360-7545	109	34
73342	29500939	2520-01-360-6353	109	13

CROSS REFERENCE INDEXES

PART NUMBER INDEX

FSCM	PART NUMBER	STOCK NUMBER	FIGURE NO	ITEM NO
73342	29500956	4820-01-361-0593	122	76
73342	29500963	5360-01-359-7948	122	66
73342	29500969	5330-01-360-7852	125	4
73342	29501026	3120-01-360-7535	127	83
73342	29501071	5360-01-359-7950	122	77
73342	29501076	2520-01-360-6310	121	6
73342	29501135	5315-01-360-5913	113	8
73342	29501144	5330-01-407-1644	125	1
73342	29501189	5330-01-360-5978	127	80
73342	29501190	5330-01-360-5979	127	81
73342	29501191	5325-01-360-1672	127	78
73342	29501192	5325-01-360-1670	127	71
73342	29501195	5325-01-360-1671	127	77
73342	29501202	2940-01-361-0628	123	6
73342	29501359		120	1
73342	29501360	3040-01-360-6019	120	14
73342	29501423	2520-01-361-3945	120	8
73342	29501424	2520-01-361-6433	120	10
73342	29501439	5330-01-388-1528	122	29
73342	29501447	2520-01-360-6312	120	3
73342	29501449	3040-01-360-6345	120	13
73342	29501469	5330-01-360-7724	123	4
73342	29501538	5325-01-359-9362	118	3
73342	29501539	3120-01-360-7533	115	7
73342	29501544	3010-01-360-4442	115	6
73342	29501551		115	1
73342	29501556	3040-01-360-6525	115	10
73342	29501557	3040-01-360-6524	114	8
73342	29501558	3110-01-360-7565	114	7
73342	29501560	5325-01-359-9361	115	8
73342	29501565		115	5
73342	29501568		114	1
73342	29501569		114	5
73342	29501570	3010-01-360-6338	114	9
73342	29501574	3040-01-360-6523	116	5
73342	29501575	5310-01-359-8811	116	4
73342	29502001	3020-01-360-7990	118	7
73342	29502030	4320-01-365-2837	113	7
73342	29502037	3120-01-360-7542	115	11
73342	29502040	3120-01-360-7541	114	10
73342	29502046		116	2
73342	29502048	3010-01-361-5151	116	6
73342	29502068	2940-01-360-3389	122	14
73342	29502105	5365-01-360-1717	127	10
73342	29502106	5365-01-360-1718	127	11
73342	29502107	5365-01-360-1025	127	12
73342	29502109	3110-01-360-7497	127	24
73342	29502110	3110-01-360-7494	127	25
73342	29502114	3110-01-360-7498	127	27
73342	29502115	3110-01-360-7495	127	28
73342	29502141	5325-01-360-0961	127	112
73342	29502153	5365-01-360-1732	127	49

CROSS REFERENCE INDEXES

PART NUMBER INDEX

FSCM	PART NUMBER	STOCK NUMBER	FIGURE NO	ITEM NO
73342	29502156	2520-01-361-0568	127	50
73342	29502161	5325-01-360-1675	127	47
73342	29502164	5325-01-360-1674	127	48
73342	29502167	3110-01-360-7744	127	34
73342	29502194	2940-01-360-7986	122	5
		2940-01-360-7986	127	91
73342	29502195	5360-01-359-7944	122	7
		5360-01-359-7944	122	30
		5360-01-359-7944	122	51
		5360-01-359-7944	127	90
73342	29502275	5365-01-360-1023	109	30
73342	29502276	5365-01-360-1024	109	30
73342	29502277	5365-01-360-1715	109	30
73342	29502320	3020-01-361-5169	117	10
73342	29502322	3040-01-360-6346	113	4
73342	29502370		117	117
73342	29502386	4730-01-388-5503	117	18
		4730-01-388-5503	268	31
73342	29502831	3020-01-361-5142	116	10
73342	29503042	3020-01-361-5691	8	13
73342	29503043	3020-01-388-4633	8	14
73342	29503045	5365-01-360-1998	8	15
		5365-01-360-1998	8	16
73342	29503046	3040-01-361-0760	8	12
73342	29503053	2520-01-361-0602	119	3
73342	29503066	3020-01-360-6386	114	4
73342	29503067	3020-01-360-6384	115	4
73342	29503079	3020-01-361-0636	120	6
73342	29503084		121	31
73342	29503141	2520-01-360-9265	121	28
73342	29503174	2520-01-361-8284	127	65
73342	29503185	5330-01-360-7518	127	69
73342	29503194		109	8
73342	29503195	2590-01-361-2371	109	9
73342	29503196	3120-01-360-7534	109	11
73342	29503197	5310-01-359-8839	109	12
73342	29503207	5340-01-360-1045	109	2
73342	29503208	5330-01-361-9785	109	3
73342	29503209	5325-01-360-1669	109	1
73342	29503215	2520-01-360-8091	121	15
73342	29503225	3120-01-360-7544	118	1
73342	29503226	5365-01-360-1039	116	1
73342	29503227	5365-01-360-1038	116	1
73342	29503228	5365-04-359-9403	116	1
73342	29503229	5365-01-360-1037	116	1
73342	29503230	5365-01-360-1040	116	1
73342	29503231	5365-01-360-1041	116	1
73342	29503232	5365-01-359-9404	116	1
73342	29503239	5325-01-360-0958	109	22
73342	29503251	3020-01-361-3957	121	8
73342	29503255		121	1
73342	29503263	5330-01-360-9034	122	16

CROSS REFERENCE INDEXES

PART NUMBER INDEX

FSCM	PART NUMBER	STOCK NUMBER	FIGURE NO	ITEM NO
73342	29503271	2520-01-361-0592	117	13
73342	29503278	3040-01-361-2338	121	3
73342	29503283	5330-01-360-9035	122	88
73342	29503288	5330-01-361-0274	117	14
73342	29503289		117	1
73342	29503297		113	3
73342	29503353	9905-01-361-3389	120	22
73342	29503360	5365-01-360-0937	122	93
		5365-01-360-0937	127	101
73342	29503380	5330-01-360-6014	122	9
		5330-01-360-6014	122	34
		5330-01-360-6014	122	48
		5330-01-360-6014	127	87
73342	29503381	5330-01-360-6015	122	23
		5330-01-360-6015	122	36
		5330-01-360-6015	122	73
73342	29503382	5330-01-360-6013	122	10
		5330-01-360-6013	122	33
		5330-01-360-6013	122	49
		5330-01-360-6013	127	88
73342	29503383	5330-01-360-6017	66	9
		5330-01-360-6017	122	24
		5330-01-360-6017	122	72
73342	29503397	3110-01-360-7504	114	11
73342	29503398	3110-01-360-7491	115	13
73342	29503519		122	1
73342	29503525	2520-01-360-6311	8	19
73342	29503531	6695-01-370-8679	122	53
73342	29503542	4730-01-388-5390	122	4
73342	29503564	4810-01-360-4314	122	11
		4810-01-360-4314	122	31
		4810-01-360-4314	122	50
		4810-01-360-4314	127	89
73342	29503565	4810-01-388-5428	122	25
73342	29503588	5365-01-359-9408	122	54
73342	29503595		122	40
73342	29503596		122	26
73342	29503631	3040-01-361-0758	36	32
73342	29503633	2520-01-388-5818	109	28
73342	29503641	5305-01-359-7999	122	27
73342	29503662	6150-01-362-5197	122	21
73342	29503663	5340-01-359-8852	122	67
73342	29503670	4730-01-360-4458	122	15
73342	29503673	4820-01-360-9095	122	70
73342	29503674	5340-01-359-8853	122	68
73342	29503675		122	55
73342	29503797	5365-01-360-2007	8	17
73342	29503829		KITS	
73342	29503837	2520-01-360-6324	120	5
73342	29503843	5340-01-360-1033	66	10
73342	29503969	5325-01-360-1973	117	11
73342	29503970	3040-01-360-8040	117	12

CROSS REFERENCE INDEXES

PART NUMBER INDEX

FSCM	PART NUMBER	STOCK NUMBER	FIGURE NO	ITEM NO
73342	29503974	5330-01-388-1576	115	2
73342	29503979	4320-01-360-9332	109	19
73342	29503980	2805-01-360-6327	109	23
73342	29503983		109	20
73342	29503986		109	6
73342	29505511	5365-01-359-9366	118	6
73342	29505560	3120-01-360-7778	121	4
73342	29505570	5340-01-362-0046	120	9
73342	29505601	6695-01-361-6055	66	12
73342	29505606	3120-01-360-7781	116	7
73342	29505612	5305-01-359-8004	122	97
		5305-01-359-8004	123	1
73342	29505639		127	70
73342	29505681	5365-01-360-1021	109	5
73342	29505682	5365-01-360-1020	109	5
73342	29505683	5365-01-360-1019	109	5
73342	29505684	5365-01-360-1018	109	5
73342	29505685	5365-01-360-1721	109	5
73342	29505686	5365-01-360-1017	109	5
73342	29505688	5365-01-360-1022	109	5
73342	29505809	5330-01-360-5329	106	7
73342	29505861	2520-01-360-6328	120	11
73342	29505891	5325-01-360-0962	121	10
73342	29505904	3040-01-361-2504	113	13
73342	29505905	4320-01-360-7970	113	14
73342	29505935	5945-01-360-5068	106	10
73342	29505936	5945-01-360-2773	106	9
73342	29505947	5365-01-360-1030	127	59
73342	29505948	5365-01-360-1029	127	60
73342	29505949	5365-01-360-1028	127	61
73342	29505992	5340-01-359-8825	127	17
73342	29506068	3040-01-360-6348	127	82
73342	29506072	5325-01-360-0959	127	79
73342	29506073	2520-01-361-0744	127	76
73342	29506074	2520-01-361-0743	127	74
73342	29506075	3020-01-360-7992	127	72
73342	29506076		118	2
73342	29506077	3040-01-360-6284	118	8
73342	29506082	4320-01-360-7954	125	2
73342	29506122	3040-01-360-4443	119	7
73342	29506165	5310-01-360-0979	106	6
73342	29506195	2520-01-360-6326	121	18
73342	29506205		122	3
73342	29506210	5330-01-360-9036	127	23
73342	29506211	5330-01-360-7519	127	36
73342	29506212	5330-01-360-9038	127	100
73342	29506213	5330-01-360-9039	127	62
73342	29506215	5310-01-359-8842	127	40
73342	29506217	5325-01-360-1673	127	53
73342	29506218	5365-01-360-1026	127	39
73342	29506219	5365-01-360-1027	127	38
73342	29506220	5365-01-360-1716	127	37

CROSS REFERENCE INDEXES

PART NUMBER INDEX

FSCM	PART NUMBER	STOCK NUMBER	FIGURE NO	ITEM NO
73342	29506222	5305-01-360-1667	127	106
73342	29506223	3120-01-360-7783	127	110
73342	29506224	3110-01-360-7745	127	107
73342	29506226	5310-01-359-8843	127	54
73342	29506228	3120-01-360-7536	127	46
73342	29506229	5340-01-360-1046	127	41
73342	29506230	5340-01-360-1047	127	99
73342	29506231	5365-01-360-1036	127	58
73342	29506239	4730-01-360-4404	127	17
73342	29506240	4730-01-360-4145	127	18
73342	29506241	4730-01-360-2485	127	103
73342	29506243	2520-01-360-6321	127	94
73342	29506244	3130-01-360-7571	127	68
73342	29506245	3040-01-360-6351	127	33
73342	29506323	5330-01-360-5262	119	8
73342	29506339		127	1
73342	29506340	3040-01-360-6347	127	19
73342	29506341		127	20
73342	29506342		127	22
73342	29506344	5315-01-360-5915	127	21
73342	29506345	3020-01-360-7991	127	26
73342	29506346	3020-01-361-3956	127	29
73342	29506347	3020-01-361-3953	127	30
73342	29506351	5935-01-360-5011	127	15
73342	29506352	5330-01-360-9037	127	14
73342	29506354	5935-01-360-5982	127	13
73342	29506355	4820-01-360-4312	127	6
73342	29506358	3110-01-360-7500	127	45
73342	29506359	3040-01-360-6349	127	63
73342	29506360	3110-01-360-7499	127	57
73342	29506361	3110-01-360-7496	127	56
73342	29506362	3040-01-361-0572	127	55
73342	29506370	3020-01-361-3955	127	113
73342	29506399	5330-01-360-5980	127	43
73342	29506484	5930-01-360-5002	122	28
73342	29506511	5310-01-442-2436	106	11
73342	29506688	4720-01-360-6226	125	6
73342	29507429	4820-01-360-7964	122	75
73342	29507432	4820-01-360-2421	122	39
73342	29507433	4810-01-360-4433	122	44
73342	29507434	5340-01-360-1044	123	2
73342	29507437	5330-01-360-7725	123	5
73342	29507443	5365-01-390-5878	122	91
73342	29507453	5945-01-360-5161	122	32
		5945-01-360-5161	122	47
73342	29507511	2520-01-361-0608	120	18
73342	29507528	5330-01-360-5917	117	4
73342	29507699	5340-01-360-0982	119	11
73342	29507700	5330-01-424-4552	119	12
73342	29507709		113	16
73342	29507750	2940-01-361-2405	125	7
73342	29507751	4730-01-360-4455	119	13

CROSS REFERENCE INDEXES

PART NUMBER INDEX

FSCM	PART NUMBER	STOCK NUMBER	FIGURE NO	ITEM NO
73342	29507755	5340-01-388-0948	112	4
73342	29507766	3040-01-362-1951	36	26
73342	29507823	5330-01-360-7826	112	6
		5330-01-360-7826	124	9
73342	29507831	4320-01-364-8293	127	5
73342	29507832		127	42
73342	29507833	3040-01-360-6350	127	44
73342	29507834	5310-01-359-8789	127	67
73342	29507835	5325-01-360-0960	127	66
73342	29507836		127	104
73342	29507837	3010-01-361-5150	127	105
73342	29507838	3040-01-361-0570	127	108
73342	29507839	3020-01-388-2799	127	109
73342	29507841	3020-01-361-2411	127	111
73342	29507842	3040-01-362-1562	127	4
73342	29508115	5360-01-359-7954	127	7
73342	29508116	5340-01-360-1077	127	8
73342	29508117	5315-01-360-7167	127	9
73342	29508166	3040-01-361-0573	127	114
73342	29508167	5365-01-360-1731	127	52
73342	29508168		127	85
73342	29508407	5306-01-388-0500	122	19
73342	29509637	6695-01-361-6056	66	8
73342	29509889	6110-01-384-5101	106	4
73342	29509959	6150-01-377-0409	74	1
73342	29511130	5325-01-443-1459	105	7
73342	29511395	3020-01-361-5169	117	10
73342	29511396	3040-01-360-8040	117	12
73342	29511406	3120-01-360-7784	116	8
73342	29511624		8	30
73342	29513126	3040-01-408-1012	KITS	
73342	29514538	3120-01-439-9133	113	6
73342	29514790	2815-01-439-5725	109	32
73342	29514799	3040-01-439-7488	117	12
73342	29514801	3040-01-439-5484	113	4
73342	29514803	2590-01-439-5730	109	9
73342	29514804	2520-01-361-1090	109	16
73342	29514805	5305-01-439-6427	109	17
73342	29515690	5330-01-430-3477	127	64
73342	29516030		113	18
73342	29516169	3040-01-361-0755	121	26
73342	29516199	3120-01-360-7777	116	9
73342	29516324	6150-01-435-9924	122	20
73342	29516486	2520-01-439-8297	113	7
73342	29516494	3040-01-361-2338	121	3
73342	29519210	6150-01-420-5987	74	3
73342	29519212	5305-01-360-2981	112	5
73342	29519627	2520-01-361-1091	105	6
73342	29523128	4320-01-423-7597	8	28
73342	29523709	3040-01-424-5401	8	24
73342	29523725	4320-01-439-8329	113	5
73342	29524394	5330-01-439-8823	122	90

CROSS REFERENCE INDEXES

PART NUMBER INDEX

FSCM	PART NUMBER	STOCK NUMBER	FIGURE NO	ITEM NO
73342	29524397	5365-01-390-5882	122	89
73342	29524444	5365-01-439-4257	122	91
73342	29524447	5340-01-443-0317	123	2
73342	29524448	5330-01-439-6677	123	4
73342	29524449		123	3
73342	29526899		KITS	
73342	29527690		8	27
73342	29527691		8	26
73342	29528207	2520-01-360-6317	120	7
73342	29532371	2520-01-360-6318	120	16
73342	29534357	5330-01-360-7521	119	6
62380	296.740	5340-01-395-1260	260	78
60038	29620	3110-00-100-0570	130	5
		3110-00-100-0570	132	5
60038	29685	3110-00-100-3568	130	6
		3110-00-100-3568	132	6
62380	298.816	5340-01-394-7391	260	50
		5340-01-394-7391	265	64
62380	298.964	5325-01-395-4214	265	28
62380	299.995	5325-01-394-7389	265	29
11757	3-P-832	3040-01-362-1775	239	48
00779	3-350820-2	5940-01-082-3321	52	15
		5940-01-082-3321	53	15
02697	3-906N552-90	5330-01-104-1093	29	26
		5330-01-104-1093	160	5
02697	3-908N552-90	5330-00-929-8171	43	10
11083	3D2824	5330-00-944-8281	5	6
		5330-00-944-8281	44	4
11083	3E0268	5945-01-360-5012	49	1
11083	3E4352	5310-01-433-5836	44	11
11083	3H5552	5340-00-007-6350	5	4
11083	3J1907	5330-01-333-6444	16	7
		5330-01-333-6444	17	8
		5330-01-333-6444	29	12
		5330-01-333-6444	31	4
		5330-01-333-6444	33	3
		5330-01-333-6444	43	7
11083	3J7354	5330-01-049-1292	8	3
		5330-01-049-1292	12	33
		5330-01-049-1292	29	3
11083	3K0360	5330-00-948-6482	16	16
		5330-00-948-6482	23	4
		5330-00-948-6482	44	2
11083	3K3257	5330-01-305-6550	47	51
11083	3N3252	5360-01-280-7446	29	28
11083	3N4087	5330-01-061-8003	8	8
11083	3N4088	5340-01-182-6728	8	11
11083	3P1156	5330-00-385-7587	18	1
11083	3R6790	4730-01-398-4688	44	5
11083	3S3268	5210-01-149-5789	288	13
11083	3V2431	5310-01-165-2482	7	7
06721	30-X-402		285	34

CROSS REFERENCE INDEXES

PART NUMBER INDEX

FSCM	PART NUMBER	STOCK NUMBER	FIGURE NO	ITEM NO
06721	30-X-901		285	44
0SHR6	30P00082		222	43
			223	38
06721	300527		285	27
24234	300597	5325-01-420-5383	245	59
24234	300620	5325-01-422-2610	245	56
06721	300634AE	5940-01-421-6922	72	8
62380	301.825	6150-01-396-0893	265	27
62380	301.841	5340-01-395-1254	265	23
75418	3018-01507-01	5330-01-393-5626	45	17
75418	3018-01519-01	5330-01-331-9283	45	16
51377	3029-01371-01	5310-01-194-0481	45	10
75418	3038-01510-01	5325-01-331-9372	45	22
0EJ14	3043		237	64
2E480	30521	5940-01-374-8363	52	96
		5940-01-374-8363	53	112
0PFG7	305475	2815-01-417-6186	247	54
0EJ14	3055		237	65
67049	305546-901	4820-01-433-9857	41	2
75418	3058-00843-06	5310-00-038-9417	45	8
51377	3058-01264-02	5310-01-189-8468	45	11
75418	3059-00870-03	5310-00-397-4524	45	25
62380	30607B	5930-01-407-1580	260	40
		5930-01-407-1580	265	2
11083	307947	4730-01-168-1050	16	17
62380	308.331	5310-01-395-7861	265	68
24234	309851	5325-01-422-2609	245	38
11757	31-P-70	3120-01-361-9000	239	53
4L145	31-29	5315-01-398-2314	212	5
0SHR6	31P00024		223	13
0SHR6	31P00025		223	7
0SHR6	31P00026		223	17
62380	310.344	4330-01-244-6435	265	58
30780	3104-2-4B	4730-01-351-1567	139	24
78500	3111D3254	2530-01-363-2387	129	60
78500	3111E3255	2530-01-363-2388	129	60
24234	312000	4720-01-422-8313	245	33
75037	313H232-6-250	5970-01-373-5692	90	5
75037	313H253-6-250	5970-01-373-5691	73	8
		5970-01-373-5691	77	8
		5970-01-373-5691	88	8
75037	313H285-6-250	5970-01-374-0822	73	10
		5970-01-374-0822	77	6
78500	3133B7178	2530-01-363-2355	129	22
79470	3152X8	4730-00-014-4027	30	25
		4730-00-014-4027	254	21
0EJ14	3159	2530-01-220-2083	237	52
62380	316.199	5340-01-394-7390	265	17
35510	31757	5305-00-177-5568	47	35
0EJ14	3182	5315-01-197-0810	237	10
62380	319.430	5340-01-407-0507	265	70
24234	320000	4720-01-422-9375	245	49

CROSS REFERENCE INDEXES

PART NUMBER INDEX

FSCM	PART NUMBER	STOCK NUMBER	FIGURE NO	ITEM NO
78500	3202A9829L	2520-01-363-8177	131	5
78500	3202B9830R	2520-01-363-8178	131	4
78500	3211G5545	2530-01-391-5854	134	16
78500	3211H5546	2530-01-391-0772	133	9
0TE27	321620	5340-01-438-9440	139	21
78500	3219-W-4833	2530-01-360-5954	129	39
		2530-01-360-5954	131	26
0TE27	3222/190PPH	5340-01-395-8022	147	4
0TE27	3222/222PPH	5340-01-378-2475	252	36
79470	3226X2	4730-00-293-3592	151	12
78500	3235F2164	3040-01-363-2384	130	9
		3040-01-363-2384	132	9
78500	3235H2166	3040-01-363-2536	130	16
		3040-01-363-2536	132	16
35510	3249	5310-00-274-4546	47	4
62380	326.666	2990-01-244-6235	260	29
78500	3262W1219	5340-01-362-6158	129	16
0EJ14	3263	5315-01-223-1159	237	22
78500	3266-A-1275	5340-01-391-2794	129	25
		5340-01-391-2794	131	12
78500	3278X1116	2520-01-362-5759	130	14
		2520-01-362-5759	132	14
78500	3278Z1118		129	29
			131	16
62380	328.529	5935-01-231-5250	260	70
78500	3280K8175		133	5
			134	9
11757	328676X	2520-01-044-2482	239	44
11757	328895X	2520-01-222-0967	239	41
11757	329073-1X	2520-01-362-3512	239	26
8N900	329075-1X		239	7
80244	33H581	4720-00-542-4688	BULK	80
0SHR6	33P00010		222	25
			223	26
0SHR6	33P00011		222	26
			223	27
0SHR6	33P00012		222	34
			223	34
62380	330.027	4730-01-394-8139	260	87
62380	331.406	5330-01-395-4645	260	16
62380	331.562	5305-01-395-0826	265	56
0SHR6	331W08000		222	23
			223	24
0EJ14	3325		237	12
75037	333H285-6-250	5970-01-387-7193	262	3
0EJ14	3365	5355-01-374-8409	237	14
52891	3382-2	3040-01-167-9212	247	53
0PFG7	33959	3040-01-417-5835	247	28
11757	34-P-114	2520-01-362-3511	239	22
62380	340.995	5330-01-244-6373	260	86
		5330-01-244-6373	265	60
24234	340958	9905-01-393-6342	245	40

CROSS REFERENCE INDEXES

PART NUMBER INDEX

FSCM	PART NUMBER	STOCK NUMBER	FIGURE NO	ITEM NO
24234	342539	7690-01-423-3971	245	27
24234	342550	7690-01-422-5682	245	51
0EJ14	3448	4730-01-375-1448	237	70
62380	345.288	4710-12-321-0893	265	62
62380	348.449	5315-01-395-0163	260	3
0EJ14	3485		237	20
8N900	35P-74	5330-01-381-2357	239	2
62380	350.427	2990-12-185-7328	260	39
		2990-12-185-7328	265	19
62380	350.516	2520-01-394-9686	265	12
62380	350.680	5340-01-395-1262	260	33
00779	350550-6	5999-01-178-4336	52	30
		5999-01-178-4336	53	34
		5999-01-178-4336	104	3
24234	350700	5330-01-295-3053	245	15
0PFG7	350887	4320-01-417-2272	247	75
0PFG7	350894	2940-01-417-6187	247	30
0PFG7	350900	5330-01-416-9964	247	74
98897	350903	5330-00-576-4626	247	76
09769	350922-6	5999-01-388-6493	52	48
		5999-01-388-6493	53	56
00779	350923-6	5940-01-407-5587	52	31
		5940-01-407-5587	53	35
		5940-01-407-5587	104	5
62380	352.144	4720-01-209-3349	260	84
62380	352.152	5340-01-394-7393	265	79
62380	352.497	5315-01-394-3546	265	80
62380	352.500	5315-01-411-9052	260	6
D1993	352-13A	2910-12-185-7336	260	93
24234	352200	5330-01-421-6105	245	42
24234	352302	5330-01-421-6107	BULK	81
24234	352302X14.5	5330-01-421-6107	245	45
24234	352302X6	5330-01-421-6107	245	44
24234	352500	5640-01-356-1684	245	18
24234	352700	5330-01-296-2109	245	14
24234	353400	5330-01-421-6102	245	46
24234	353806	5330-01-421-6103	245	36
24234	353810	5330-01-K64-0283	245	43
01993	354.902	5930-01-221-7902	260	45
		5930-01-221-7902	265	63
0EJ14	3540	5360-01-397-6860	237	75
62380	355.836	4810-01-244-6245	265	57
24234	355148	5330-01-423-0596	245	52
24234	355150	5330-01-423-0689	245	53
24234	355175	5330-01-423-0623	245	35
96652	36-03	5310-01-231-5759	279	8
24234	360400	2540-01-422-7757	245	25
24234	360784	5325-01-K64-0288	245	61
62380	362.107	5340-01-394-7392	260	41
		5340-01-394-7392	265	3
62380	362.115	5340-01-395-1265	260	17
62380	363.618	5306-01-397-0298	265	77

CROSS REFERENCE INDEXES

PART NUMBER INDEX

FSCM	PART NUMBER	STOCK NUMBER	FIGURE NO	ITEM NO
0PFG7	36497	4820-01-417-1559	247	34
35510	36900	5310-00-482-1999	47	38
11757	37-P-39	5360-01-043-6239	239	59
62380	371.289	3020-01-395-7281	239	63
		3020-01-395-7281	239	33
62380	373.001	2930-01-395-3438	239	24
0PFG7	37434	3040-01-418-7591	239	63
62380	376.930	2910-01-244-6436	239	89
62380	377.368	4210-01-244-6241	239	32
62380	378.232	4820-01-394-9688	239	49
62380	378.313	3120-01-396-7108	239	25
62380	378.321	3120-01-407-6556	239	57
11757	378429-8	5306-01-145-6949	239	27
95019	378447-8	5305-01-051-9899	239	34
11757	378608	5325-01-145-1592	239	54
		5325-01-145-1592	239	57
11757	378684	3020-01-043-6178	239	50
11757	378760	3010-01-043-0932	239	42
11757	378811	5310-01-044-0774	239	19
11757	378849	5325-01-145-1179	239	18
11757	378856	9505-01-222-7564	239	46
11757	378895	5325-01-361-8375	239	37
11757	379133	2520-01-221-0898	239	45
11757	379231	4730-01-221-0821	239	29
11757	379242	5365-01-221-0820	239	30
11757	379377-2	4810-01-360-2353	239	24
8N900	379451	5305-01-381-1542	239	1
8N900	379453-10	5305-01-425-9997	239	5
11757	379484	5365-01-361-8369	239	17
11757	379485	2520-01-361-5190	239	49
8N900	379486	4730-01-383-5730	239	3
11757	379487	4730-01-365-9170	239	23
8N900	379502	5930-01-385-4301	239	6
11757	379505	5330-01-362-0664	239	16
50620	38-20LP	5315-01-406-7423	216	14
24234	380007	5355-01-K64-0289	245	28
24234	380087	5355-01-290-1619	245	29
62380	382.485	5305-01-395-0836	265	4
35510	38406	9390-00-112-8047	47	10
33457	3845560	2910-01-383-5096	264	44
62380	386.650	2990-01-417-2242	265	39
62380	388.815	5945-01-395-8628	265	5
11083	392281	5365-01-360-0975	12	18
35510	3966	5305-01-121-5475	47	9
62380	397.563	2590-01-244-6239	260	34
62380	398.144	2520-01-244-6394	260	58
81343	4 090109AB	5365-01-246-2870	248	8
81343	4 130109AC	4730-01-177-4734	29	22
81343	4 130109C	4730-01-381-8730	264	46
		4730-01-381-8730	266	47
11757	4-P-147	5365-01-361-8404	239	38
81343	4-070118C	5365-01-378-2881	19	2

CROSS REFERENCE INDEXES

PART NUMBER INDEX

FSCM	PART NUMBER	STOCK NUMBER	FIGURE NO	ITEM NO
		5365-01-378-2881	126	2
		5365-01-378-2881	249	9
		5365-01-378-2881	251	2
12361	4-195-1-00860	3040-01-395-5244	277	7
12361	4-195-1-00871	5340-01-394-4477	277	30
81343	4-2 010102S	4730-00-473-8357	137	22
		4730-00-473-8357	266	20
		4730-00-473-8357	285	1
81343	4-2 010103B	4730-00-090-0832	139	33
81343	4-2 100202BA	4730-01-055-4013	189	25
		4730-01-055-4013	285	13
81343	4-2 100203BA	4730-01-113-1791	189	17
81343	4-2 130140B	4730-00-828-0171	139	22
81343	4-2-100103BA	4730-01-088-7502	189	16
81343	4-4 070320C	4730-01-092-0126	126	4
		4730-01-092-0126	249	22
81343	4-4 070601CA	4730-00-679-9280	249	8
81343	4-4 130138B	4730-00-277-5736	266	42
81343	4-4 130139C	4730-01-347-7342	41	3
81343	4-4 430260S	4730-01-381-8912	258	21
		4730-01-381-8912	264	45
81343	4-4 430360S	4730-01-381-8281	264	38
81343	4-4-100102BA	4730-01-091-9212	138	31
		4730-01-091-9212	139	28
81343	4-4-4 010401BA	4730-00-092-3883	268	15
81343	4-4-4 130424B	4730-01-234-4802	139	29
		4730-01-234-4802	268	10
81343	4-4-4 140424C	4730-00-177-6166	266	46
81343	4-6 100202BA	4730-01-085-6577	153	14
81343	4-6-010102B	4730-00-266-0534	138	37
		4730-00-266-0534	268	9
11083	4C4462	5180-01-415-5896	289	20
11083	4C4716	4910-01-361-2839	288	21
11083	4C5851	4910-01-361-2840	288	14
58312	4D9986-00	5330-00-498-2906	31	10
11083	4F3714	5310-01-163-9318	44	14
11083	4F7391	5330-00-562-1073	27	8
11083	4F9029	5330-00-118-6559	12	35
11083	4F9653	5330-00-038-4327	12	16
11083	4J5477	5330-00-855-8059	29	5
11083	4K1388	5330-00-933-3305	49	4
11083	4L9564	5330-00-828-8639	22	1
11083	4P1623	5330-01-360-5932	23	11
11083	4P1624	5330-01-360-5934	23	10
11083	4P1806	2815-01-361-2288	9	1
11083	4P1807	2815-01-361-3931	9	2
11083	4P1847	2990-01-361-2372	23	16
11083	4P2901	4730-01-361-2265	23	14
11083	4P2907	4710-01-361-2531	16	4
11083	4P2949	2835-01-362-4442	27	14
11083	4P2987	5365-01-433-8407	31	29
11083	4P2995	2910-01-361-2368	25	1

CROSS REFERENCE INDEXES

PART NUMBER INDEX

FSCM	PART NUMBER	STOCK NUMBER	FIGURE NO	ITEM NO
11083	4P3953		31	11
11083	4P4014	4730-01-361-5683	27	9
11083	4P4224	5340-01-408-8527	31	7
11083	4P5153	4730-01-360-4242	12	34
11083	4P5651	4710-01-361-0817	5	15
11083	4P6930	5330-01-360-7172	4	9
11083	4P7596	3040-01-434-8708	31	24
11083	4P7792	3040-01-361-2502	14	11
11083	4P8577	2815-01-360-5538	15	11
11083	4R8831	5330-01-360-9023	6	7
11083	4R8832	3020-01-360-6543	7	4
11083	4R8939	2815-01-388-0665	7	6
11083	4R9036	2910-01-361-5154	31	1
11083	4R9147	2950-01-361-3182	27	3
11083	4R9233	5340-01-360-1701	3	16
11083	4R9234	5340-01-360-1750	3	3
11083	4R9237	4710-01-361-0816	21	3
11083	4R9803	5330-01-384-2025	KITS	
11083	4R9999		6	8
11083	4W0549	5330-01-347-3207	43	8
11083	4W2232	4730-01-361-2266	18	8
11083	4W5158	2910-01-388-5518	33	4
11083	4W8339	5340-01-360-1221	12	15
78500	40-X-1241	5310-01-391-5249	130	19
		5310-01-391-5249	132	19
75418	4001-40690-01	5365-01-331-9503	45	18
06721	400156-A		285	21
06721	400158		285	31
51377	4026-36900-01	2530-01-246-4400	45	23
51377	4035-41393-74	2930-01-384-1197	45	1
51377	4038-37641-01	3040-01-363-8166	45	2
51377	4038-38806-01	5365-01-362-7247	45	4
D1993	404.918	5975-12-305-7493	260	27
		5975-12-305-7493	265	6
75418	4040-41131-01		45	9
75418	4040-41131-02		45	9
75418	4043-41130-01	2930-01-332-9887	45	12
62380	406.287	5920-01-217-8335	260	43
		5920-01-217-8335	265	71
75418	4073-38444-01	5340-01-331-9610	45	24
75418	4079-41132-01	3010-01-393-2740	45	20
75418	4079-41133-01	3040-01-332-5830	45	21
51377	4082-37634-01	5325-01-194-3076	45	3
75418	4088-40615-01	5360-01-392-9389	45	19
78500	41X1363	5305-01-362-4400	130	37
		5305-01-362-4400	132	37
23540	411	5970-01-089-7447	182	24
		5970-01-089-7447	182	24
		5970-01-089-7447	197	9
78500	41102K2-1.95		130	15
			132	15
24234	411271	2540-01-422-7758	245	11

CROSS REFERENCE INDEXES

PART NUMBER INDEX

FSCM	PART NUMBER	STOCK NUMBER	FIGURE NO	ITEM NO
62380	412.244	5330-01-395-0839	265	26
62380	412198	4530-01-395-6057	260	81
		4530-01-395-6057	265	53
00779	41274	5940-00-874-9033	52	5
		5940-00-874-9033	53	5
		5940-00-874-9033	76	5
		5940-00-874-9033	104	14
62380	415.073	2540-01-411-5532	265	73
78500	41633K2		130	32
			132	32
78500	42X1064		133	21
			134	25
78500	42X1409	5365-01-362-6157	130	8
		5365-01-362-6157	132	8
62380	420.565	5315-01-395-0837	265	76
62380	420042	4540-01-394-8137	260	68
		4540-01-394-8137	265	41
05523	42051-14	5305-01-149-0867	46	54
		5305-01-149-0867	78	33
		5305-01-149-0867	149	7
		5305-01-149-0867	151	8
		5305-01-149-0867	152	17
		5305-01-149-0867	172	1
		5305-01-149-0867	190	7
		5305-01-149-0867	190	7
		5305-01-149-0867	196	5
0PFG7	420828	5340-01-417-3788	247	27
62380	425.052	5340-01-395-1255	265	11
62380	425.079	6105-01-395-1311	265	15
00779	42565-1	5940-00-177-6760	260	12
00779	42844-1	5940-00-945-2082	52	59
		5940-00-945-2082	53	72
62380	429.112	4530-01-396-1376	265	52
62380	42977A	4320-01-410-8799	265	54
19220	4302	5340-01-326-2085	220	13
19220	4303	5340-01-386-6208	218	24
		5340-01-386-6208	219	28
62380	434.795	6150-01-395-2542	265	21
55752	43506	5330-01-416-8898	34	2
62380	436.216	5340-01-395-1256	265	20
62380	436.410	5340-01-395-1263	260	38
62380	437.247	5340-01-395-1258	260	67
		5340-01-395-1258	265	42
62380	440.280	4910-01-426-3974	287	1
08806	4416	6240-00-578-6763	269	6
62380	444.170	6150-01-395-2543	260	42
24617	444626	4730-00-842-7841	28	16
24617	444688	4730-00-044-4688	47	11
55752	445R-SS-01	2910-01-361-8229	34	1
62380	447.900	2990-01-383-5285	265	1
62380	453.048	2990-01-244-6242	260	74
		2990-01-244-6242	265	48

CROSS REFERENCE INDEXES

PART NUMBER INDEX

FSCM	PART NUMBER	STOCK NUMBER	FIGURE NO	ITEM NO
62380	458.201	5306-01-340-2695	260	4
62380	458392	4320-01-385-7015	257	31
		4320-01-385-7015	260	11
78500	461 315 161 0	2530-01-361-8581	149	13
62380	461.555	5310-01-395-0818	265	78
62380	461.563	5310-01-339-3991	260	5
62380	463.027	5340-01-395-1264	260	22
62380	464.155	4710-01-394-8142	260	88
62380	464.333	2990-01-376-5662	260	7
62380	469.084	2540-12-336-5270	260	2
62380	470.562	5305-01-395-0841	260	25
62380	470.716	4530-12-336-1647	260	80
78500	4705	2520-01-392-0318	KITS	
78500	4706	2530-01-391-5859	KITS	
78500	4707	2530-01-407-9251	KITS	
78500	4714	5365-01-390-7141	KITS	
		5365-01-390-7141	KITS	
78500	4715	5365-01-390-8484	KITS	
		5365-01-390-8484	KITS	
78500	4718	5365-01-391-2791	KITS	
		5365-01-391-2791	KITS	
57733	47200	4820-00-637-2576	237	9
78500	4721	2520-01-391-0775	KITS	
		2520-01-391-0775	KITS	
78500	4724	2520-01-393-2726	KITS	
		2520-01-393-2726	KITS	
78500	4725	2530-01-394-0392	KITS	
		2530-01-394-0392	KITS	
78500	4726	3120-01-392-2959	KITS	
		3120-01-392-2959	KITS	
78500	4727	2530-01-394-4794	KITS	
		2530-01-394-4794	KITS	
61220	47620	3110-00-100-0589	129	35
		3110-00-100-0589	131	22
60038	47686	3110-00-100-3611	129	34
		3110-00-100-3611	131	21
30327	48F1-8 1-4	4730-00-900-3296	45	13
0PFG7	48010	4330-01-417-2265	247	45
49185	483666	4720-00-913-5910	BULK	82
0CVH3	485630-0001	2930-01-370-0240	28	1
62380	487.627	5340-01-395-1266	260	53
93908	49005	5975-01-123-8811	BULK	83
93908	49007	5975-00-839-6089	BULK	84
93908	49008	5975-00-204-9190	BULK	85
93908	49010	5975-01-144-1912	BULK	86
93908	49011	5975-01-131-9492	BULK	87
11757	5-P-915	3020-01-362-3525	239	10
78500	5-X-1155	5330-01-392-1637	129	46
		5330-01-392-1637	131	33
81337	5-4-3101	5310-01-225-3870	219	18
81337	5-4-3106	3120-01-225-3950	219	25
81337	5-4-4875	5975-00-539-6914	225	7

CROSS REFERENCE INDEXES

PART NUMBER INDEX

FSCM	PART NUMBER	STOCK NUMBER	FIGURE NO	ITEM NO
81337	5-4-4876		225	6
11083	5C9553	5306-01-181-7849	31	22
11083	5F7054	5330-00-339-6224	29	1
11083	5F9657	5330-00-291-9572	20	10
11083	5M6213	4730-00-089-2515	12	30
11083	5P0302	2815-01-123-5891	288	20
11083	5P0537	5310-01-051-2360	13	2
11083	5P4160	5210-01-360-4104	288	12
11083	5P4814	5120-01-353-1576	288	4
11083	5P7813	5330-01-335-0042	29	30
11083	5P8196	5340-01-343-6678	16	10
		5340-01-343-6678	20	5
11083	5P8245	5310-01-098-0624	12	6
		5310-01-098-0624	154	17
11083	5P8247	5310-01-095-4631	5	10
11083	5P8347	5305-01-360-1005	23	1
11083	5R7840	5935-01-102-7124	72	2
11083	5R8833	4710-01-361-2532	21	6
11083	5R9016	2930-01-361-2491	43	12
11083	5R9022	2930-01-361-6523	44	1
11083	5R9051	5330-01-360-5987	KITS	
11083	5R9065	2910-01-363-6816	KITS	
45152	5WB42	5305-01-246-2383	260	82
		5305-01-246-2383	265	51
70898	50-534718-19	8315-00-935-6762	BULK	88
0SHR6	50P00006		223	44
71286	50R-4-1-1AA	5325-01-049-2049	196	12
71286	50S10-15-1AA	5325-01-380-7889	196	6
71286	50S12-1-1AA	5325-01-145-0105	196	10
13499	500-1114-003	5310-01-042-8391	46	33
		5310-01-042-8391	273	38
11757	50007-29	5315-00-237-7589	239	47
11757	500597-16	5315-01-361-6947	239	12
63208	50257		268	37
0PFG7	50494	4320-01-417-2739	247	73
57733	506AZ	6620-01-419-2992	66	5
57733	506BA	6685-01-419-2990	66	2
84256	50996-8W	4010-01-388-3680	168	6
		4010-01-388-3680	169	4
		4010-01-388-3680	170	7
		4010-01-388-3680	172	29
		4010-01-388-3680	187	9
		4010-01-388-3680	238	17
		4010-01-388-3680	253	8
		4010-01-388-3680	283	16
31550	511357-46	5305-01-202-6841	54	2
79466	51231	5975-00-178-1216	BULK	89
0PFG7	51480	3040-01-418-0002	247	48
24234	515864	5340-01-420-9895	245	26
24234	515865	5340-01-420-9793	245	54
24234	515866	5975-01-420-8392	245	58
24234	515867	4730-01-420-7908	245	41

CROSS REFERENCE INDEXES

PART NUMBER INDEX

FSCM	PART NUMBER	STOCK NUMBER	FIGURE NO	ITEM NO
24234	516638	5340-01-419-9941	245	19
24234	516640	2930-01-420-8621	245	13
24234	516643	5340-01-419-9944	245	30
24234	516644	2510-01-420-5182	245	37
24234	516651	2510-01-420-5183	245	39
24234	516653	2510-01-420-5184	245	60
0EJ14	51954	2590-01-379-4568	237	7
0PFG7	52390	4320-01-417-2266	247	61
13508	5262	5330-01-394-2412	281	14
19207	5310615	5310-00-463-0268	59	6
0TE27	5320/320PPH	4730-01-387-7116	252	28
30780	533-T-4-4	4730-01-336-3316	249	11
		4730-01-336-3316	250	15
66842	5400437		232	6
11757	550010	3110-00-516-5490	239	36
11757	560972		239	51
			239	55
0TE27	5655-06-06-06-06		266	45
19207	57K1215	3810-01-384-9668	274	1
0FW39	57K1217	2540-01-383-5411	264	1
19207	57K1218	2540-01-381-1626	257	1
0FW39	57K1220	6220-01-423-2337	269	1
19207	57K1224	1005-01-381-5431	283	1
19207	57K1893	2540-01-381-5860	270	1
19207	57K1898	2540-01-385-9462	271	1
19207	57K1903	2540-01-381-3967	268	1
19207	57K1908	2540-01-393-2717	271	1
19207	57K1912	6115-01-432-2684	272	1
19207	57K1918	6115-01-431-5092	272	1
19207	57K1925	2540-01-437-1463	271	1
19207	57K1947		267	1
19207	57K1948		266	1
19207	57K1952		282	1
35510	57022	5340-01-127-5636	47	12
19207	5702711	3120-00-089-2707	47	16
19207	5705042	2920-01-087-0997	KITS	
59730	5712		229	9
66842	5820044		232	3
0PFG7	58473	4730-01-417-2669	247	23
0PFG7	58477	4930-01-417-4876	247	21
82484	59L.412	6210-01-417-7033	50	44
82484	59L.414	2910-01-383-5417	257	59
82484	59L.487	5895-01-443-1949	51	16
82484	59L-292	6210-01-389-6456	257	52
2E480	59056	5340-01-376-0541	52	92
		5340-01-376-0541	53	108
2E480	59099	5340-01-376-0542	52	93
		5340-01-376-0542	53	109
2E480	59158	5935-01-421-9768	52	94
		5935-01-421-9768	53	110
35510	5955	5310-00-508-5439	47	8
82484	596289	5935-01-351-1892	52	2

CROSS REFERENCE INDEXES

PART NUMBER INDEX

FSCM	PART NUMBER	STOCK NUMBER	FIGURE NO	ITEM NO
		5935-01-351-1892	53	2
		5935-01-351-1892	104	16
52304	599791	4460-01-284-2344	155	21
7P109	599827	2530-01-360-6198	139	5
52304	5999807		155	14
81343	6 130109NC	4730-00-057-5555	266	44
93061	6-M16X1.5F80X-S	4730-01-378-8668	161	18
81337	6-1-2248	9905-00-565-6267	246	25
81343	6-10 070120CA	4730-00-623-9673	257	42
81343	6-10 070202C	4730-01-411-0665	257	38
81343	6-130139B	4730-00-289-4736	146	5
12361	6-176-002165		281	10
81343	6-2 100102BA	4730-01-134-0854	150	1
81343	6-2 100202BA	4730-01-134-1278	138	28
		4730-01-134-1278	150	5
81343	6-2 140140C	4730-00-873-0110	43	33
12361	6-200-040008	3120-01-367-6404	277	17
12361	6-246-002509	6150-01-368-3166	274	3
81343	6-4 070123BA	4730-01-194-5339	266	25
81343	6-4 070603BA		266	26
81343	6-4 100102BA	4730-01-062-2570	152	10
81343	6-4 100202BA	4730-00-069-1187	142	3
		4730-00-069-1187	145	2
		4730-00-069-1187	150	8
81343	6-4 100302BA	4730-01-174-9405	140	9
		4730-01-174-9405	151	5
		4730-01-174-9405	152	13
81343	6-4 130140C	4730-01-188-3183	149	8
81343	6-4 140137C	4730-00-726-1103	138	26
81343	6-4 140140S	4730-00-935-1528	264	37
81343	6-4 241442S	4730-01-411-7546	264	40
81343	6-4 430160BA		266	27
81343	6-4 430260B	4730-00-041-2526	266	49
81343	6-4-6 100424BA	4730-01-134-7760	145	6
12361	6-511-001259		274	9
12361	6-511-001260		277	8
12361	6-511-001261		278	2
12361	6-511-001262		278	4
12361	6-511-001263		278	1
			278	1
12361	6-512-001842		281	17
12361	6-570-060521		277	6
81343	6-6 010202B (E1)	4730-00-254-6228	142	8
		4730-00-254-6228	143	8
81343	6-6 010302B	4730-01-158-9201	137	13
81343	6-6 070120C	4730-01-334-5710	29	33
81343	6-6 070202BA	4730-00-833-4613	30	17
81343	6-6 100103BA	4730-01-134-0853	135	19
81343	6-6 100202BA	4730-01-274-1825	135	14
		4730-01-274-1825	138	33
		4730-01-274-1825	141	14
		4730-01-274-1825	151	9

CROSS REFERENCE INDEXES

PART NUMBER INDEX

FSCM	PART NUMBER	STOCK NUMBER	FIGURE NO	ITEM NO
		4730-01-274-1825	152	8
		4730-01-274-1825	153	17
		4730-01-274-1825	268	13
81343	6-6 100302BA	4730-01-086-2864	143	2
81343	6-6 130137B	4730-00-249-9714	135	17
		4730-00-249-9714	139	39
81343	6-6 140424C	4730-00-958-1475	43	34
81343	6-6-6 070425S	4730-01-408-3169	264	41
81343	6-6-6 100424BA	4730-01-283-1876	141	11
		4730-01-283-1876	151	15
81343	6-6-6 100425BA	4730-01-283-1877	268	4
81343	6-6-6 130424B	4730-00-469-7797	138	34
		4730-00-469-7797	150	12
		4730-00-469-7797	152	1
		4730-00-469-7797	153	13
81343	6-6-6 130425B	4730-00-125-7979	135	16
		4730-00-125-7979	151	13
12361	6-679-002455	5340-01-394-5978	281	4
12361	6-718-001106	3020-01-395-0417	279	11
81343	6-8 100102BA	4730-01-096-9127	136	4
81343	6-8 100302BA	4730-01-096-3169	138	22
12361	6-949-001166	3120-01-395-1383	277	3
11083	6D1004	5330-01-059-9593	160	8
11083	6F6673	5330-00-865-0404	31	16
11083	6F7062	5310-00-362-7988	5	8
11083	6I0924	2815-01-361-2394	14	2
11083	6I1241	2815-01-388-4658	15	10
11083	6I3033	5325-01-360-0954	24	5
11083	6I3035	5325-01-360-0953	24	6
11083	6I3812	5306-01-387-9170	17	4
11083	6I4248	2815-01-361-6202	9	4
11083	6V1722	4730-01-360-7750	44	7
11083	6V2315	5306-01-433-4753	13	1
11083	6V2317	5306-01-360-0929	12	10
		5306-01-360-0929	20	7
		5306-01-360-0929	44	12
11083	6V3538	5315-01-188-1865	5	17
11083	6V3821	5305-01-360-1992	22	4
11083	6V3822	5305-01-360-1990	10	1
11083	6V3918	5305-01-360-1002	12	3
11083	6V3940	5305-01-360-1009	5	14
		5305-01-360-1009	11	1
		5305-01-360-1009	18	2
		5305-01-360-1009	21	2
		5305-01-360-1009	27	10
		5305-01-360-1009	43	2
11083	6V4248	5305-01-360-1994	18	69
11083	6V5215	5305-01-360-1707	44	15
11083	6V5217	5306-01-360-0931	12	9
11083	6V5218	5305-01-360-1006	16	1
		5305-01-360-1006	23	8
		5305-01-360-1006	31	13

CROSS REFERENCE INDEXES

PART NUMBER INDEX

FSCM	PART NUMBER	STOCK NUMBER	FIGURE NO	ITEM NO
11083	6V5219	5305-01-360-1006	33	8
11083	6V5223	5305-01-360-1993	20	8
		5305-01-360-1007	15	6
11083	6V5230	5305-01-360-1007	23	6
11083	6V5683	5305-01-360-1997	43	11
11083	6V5815	5305-01-360-1696	32	1
11083	6V5839	5305-01-360-1995	17	3
		5310-01-360-0983	17	2
11083	6V6106	5310-01-360-0983	18	7
11083	6V6317	5210-01-372-3967	288	19
11083	6V7145	5305-01-360-1704	29	32
11083	6V7918	5140-01-373-6823	288	2
11083	6V8187	5120-00-081-9074	288	26
11083	6V8213	5310-00-913-7020	31	26
11083	6V8336	5305-01-384-9164	23	7
		5305-01-360-1001	7	9
		5305-01-360-1001	12	7
		5305-01-360-1001	154	18
11083	6V8377	5310-01-297-1062	49	3
11083	6V8628	4730-01-360-9206	29	10
11083	6V8647	4730-01-360-9109	29	4
11083	6V8724	4730-01-360-4146	16	6
		4730-01-360-4146	29	13
11083	6V9607	5305-01-360-1706	33	6
11083	6V9850	4730-01-411-7545	29	24
0SHR6	60P00477		222	5
0SHR6	60P01995		219	35
0SHR6	60S00478	2510-01-412-8155	222	2
0SHR6	60S01354		222	3
0SHR6	60S01908		223	8
0SHR6	60S01910		223	2
62380	600.291	5945-01-437-8072	265	16
72850	60001		266	21
07687	6000140-9	4130-01-010-9170	BULK	90
09990	60095-11		252	15
33609	6015	6140-01-421-8339	69	12
06721	602000-FP		285	18
06721	602000-GW		285	23
06721	602000-HG		285	41
00779	60253-2	5940-01-353-6476	52	3
		5940-01-353-6476	53	3
		5940-01-353-6476	104	12
35510	60263	4730-01-187-3645	47	34
62380	603.547	5930-01-396-7393	265	30
62380	608.719	5920-01-395-3748	260	46
		5920-01-395-3748	265	72
0SHR6	61P00025		222	36
0SHR6	61S00024	2510-01-412-4611	222	30
0SHR6	61S00072		222	35
0SHR6	61S00078		223	40
0SHR6	61S00080		223	31
0SHR6	61S00086		219	34

CROSS REFERENCE INDEXES

PART NUMBER INDEX

FSCM	PART NUMBER	STOCK NUMBER	FIGURE NO	ITEM NO
56442	616G4	5310-00-350-2655	64	7
21793	616329	5305-01-307-4391	260	35
27647	6221	3020-01-397-2326	276	20
99688	62229	5310-01-161-7308	245	55
0TE27	6405-6-4	4730-01-389-9628	29	21
19220	6411B	5340-00-489-5684	210	11
56501	65	5340-00-374-1831	225	35
23540	659	5340-01-384-1120	182	30
66842	6650007		232	2
78500	66520	3110-00-100-0609	130	25
		3110-00-100-0609	132	25
78500	66589	5365-01-362-4497	130	24
		5365-01-362-4497	132	24
52304	673201		153	5
52304	673204	2920-01-375-1483	57	5
52304	673217		155	20
52304	673219	4820-01-372-2769	153	3
52304	673221	6695-01-447-4065	153	4
52304	673222	5340-01-369-3358	155	22
52304	673245	4820-01-370-2751	155	13
52304	673268		155	17
52304			155	19
52304	673269	5330-01-395-1252	155	26
52304	673994		155	15
52304	673996		155	16
52304	673997		155	25
52304	673998		155	27
52304	673999		155	28
52304	676200		155	18
97907	6776456	5330-01-329-9093	8	21
94222	68-99-216N		204	10
73342	6881926	3120-01-360-7532	113	6
73342	6885065	5360-01-359-7952	122	83
12361	7-069-001086	3120-01-394-7850	277	21
12361	7-111-080410	5305-01-207-7512	281	1
12361	7-199-002668	3120-01-367-6894	279	10
12361	7-490-000631	3020-01-395-3980	277	22
12361	7-585-000730	2540-01-367-9768	274	17
12361	7-660-160000	5310-01-293-2835	274	18
12361	7-679-002350	9905-01-368-5466	274	11
12361	7-679-002360	9905-01-368-5467	274	10
12361	7-689-001643	5315-01-397-7325	277	24
12361	7-709-000824	5935-01-369-0796	281	12
12361	7-753-000238	5325-01-368-8703	277	9
12361	7-892-000839	5935-01-369-1457	280	2
12361	7-892-000853	5935-01-399-7113	281	5
12361	7-949-000534	5310-01-259-6358	277	20
12361	7-949-001151	5310-01-368-5465	277	2
12361	7-962-000040	3810-01-173-4227	274	13
11083	7C0111	5325-01-360-0956	9	11
11083	7C0358	5330-01-360-5936	21	4
11083	7C0952	4720-01-361-2539	22	6

CROSS REFERENCE INDEXES

PART NUMBER INDEX

FSCM	PART NUMBER	STOCK NUMBER	FIGURE NO	ITEM NO
11083	7C1159	5330-01-360-5941	33	1
11083	7C1160	5330-01-360-5937	16	8
11083	7C1493	4820-01-284-5435	16	13
		4820-01-284-5435	20	2
11083	7C3179	3020-01-360-6391	154	14
11083	7C3760	4710-01-361-2530	27	5
11083	7C3839	5340-01-360-1725	31	19
11083	7C3901	2815-01-361-2293	9	10
11083	7C4273	5360-01-359-7943	15	3
11083	7C5294		31	5
11083	7C6961	3120-01-361-1158	6	3
11083	7C6962	3120-01-361-1159	6	3
11083	7C6964	3120-01-361-1157	6	3
11083	7C6965	3120-01-361-3151	6	3
11083	7C6966	3120-01-360-5296	6	1
11083	7C6967	3120-01-360-5297	6	1
11083	7C6969	3120-01-360-5294	6	1
11083	7C6970	3120-01-360-5295	6	1
11083	7C6971	3120-01-360-5957	6	2
11083	7C6972	3120-01-360-5300	6	2
11083	7C6974	3120-01-360-5299	6	2
11083	7C6975	3120-01-360-5956	6	2
11083	7C6976	3120-01-360-5289	9	9
11083	7C6977	3120-01-360-5290	9	9
11083	7C7431	5330-01-360-5940	27	1
11083	7C7911	4730-01-361-2267	43	1
11083	8C8444	2815-01-385-4719	7	5
11083	7C8854	3040-01-429-7904	31	12
11083	7E0156	3040-01-413-4020	31	8
11083	7E0844	5330-01-360-5942	31	31
11083	7E2313	4730-01-360-4160	17	7
11083	7E2968	3130-01-360-7564	5	9
11083	7E5189	4820-01-360-2395	29	29
11083	7E5190	4720-01-361-0505	29	2
11083	7E5984	5340-01-360-1793	15	8
11083	7E6366	3040-01-361-0615	12	5
11083	7E6794	2815-01-360-4450	12	26
11083	7E7779	4810-01-360-2415	15	2
11083	8E8445	5315-01-434-3300	31	23
11083	7E9314	2815-01-360-2467	23	3
11083	7E9763	2910-01-363-3089	33	7
11083	7E9817	5330-01-360-5938	16	19
11083	7E9898	4730-01-417-4887	31	20
11083	7N5683	5315-01-360-6728	5	16
11083	7N7779	5999-01-150-8808	52	10
11083		5999-01-150-8808	53	10
11083		5999-01-150-8808	71	10
11083		5999-01-150-8808	73	5
11083		5999-01-150-8808	76	9
11083		5999-01-150-8808	77	10
11083		5999-01-150-8808	81	5
11083		5999-01-150-8808	82	3

CROSS REFERENCE INDEXES

PART NUMBER INDEX

FSCM	PART NUMBER	STOCK NUMBER	FIGURE NO	ITEM NO
		5999-01-150-8808	83	3
		5999-01-150-8808	84	15
		5999-01-150-8808	85	13
		5999-01-150-8808	86	16
		5999-01-150-8808	87	7
		5999-01-150-8808	90	3
		5999-01-150-8808	104	10
11083	8N7782	5935-01-150-8322	71	12
11083	7N9737	5935-01-150-8323	71	13
		5935-01-150-8323	82	4
		5935-01-150-8323	83	4
		5935-01-150-8323	85	15
		5935-01-150-8323	86	17
		5935-01-150-8323	90	2
11083	7N9738	5935-01-149-5165	52	27
		5935-01-149-5165	53	31
		5935-01-149-5165	71	9
		5935-01-149-5165	76	2
		5935-01-149-5165	81	4
		5935-01-149-5165	86	15
		5935-01-149-5165	87	5
11083	7S7369	4730-00-921-3245	285	5
11083	7W0183	4710-01-361-3983	29	15
11083	7W0367	4710-01-361-2534	29	11
11083	7W2398	5330-01-360-5935	27	4
11083	7W2426	5330-01-360-5927	12	20
11083	7W3773	3020-01-384-6236	7	1
11083	7W3871	2815-01-360-7980	12	13
11083	7W3872	5340-01-360-1885	12	17
		5340-01-360-1885	31	15
11083	7W3983	5325-04-360-0955	14	8
11083	7W3989	2815-01-360-6352	12	25
11083	7W4069	5365-01-360-0974	12	28
11083	7W4070	3020-01-360-6389	11	5
11083	7W4117	5310-01-359-9328	14	6
11083	7W4339	3040-01-360-6280	12	27
11083	7W5340	5330-01-360-7173	18	4
11083	7W5426	2815-01-360-6339	11	3
11083	7W5615		31	9
11083	7W5903	2930-01-398-2009	16	9
11083	7W6552	5330-01-360-5929	12	8
11083	7W7383	4820-01-430-3427	31	3
11083	7W8064	2815-01-361-8177	15	13
11083	7W8065	4820-01-360-4400	15	15
11083	7W9028	4330-01-384-6317	20	1
11083	7W9395	2815-01-360-2429	12	14
11083	7W9414	3120-01-360-5291	6	3
11083	7W9415	3120-01-360-5288	9	9
11083	7W9417	3120-01-360-5293	6	2
11083	7W9699	5330-01-360-5928	12	19
11083	7W9737	5365-01-360-1035	10	5
11083	7W9738	5310-01-359-8807	10	8

CROSS REFERENCE INDEXES

PART NUMBER INDEX

FSCM	PART NUMBER	STOCK NUMBER	FIGURE NO	ITEM NO
11083	7W9740	3020-01-361-2410	10	7
11083	7W9930	3120-01-360-5286	10	6
11083	7X0521	5310-01-359-8808	154	15
11083	7X0579	5310-01-433-5837	31	28
11083	7X0818	5306-01-360-0930	12	31
11083	7X2459	4730-01-360-4197	29	19
11083	7X2521	5330-01-363-7467	KITS	
11083	7X2524	5330-01-442-2871	KITS	
11083	7X2525	5330-01-360-5988	KITS	
11083	7X2526	5330-01-360-5976	KITS	
11083	7X2528	5330-01-361-1486	KITS	
11083	7X2537	5306-01-413-7704	31	27
11083	7X3347	5305-01-360-0952	8	6
0SHR6	70P00002		222	39
60248	7000210070	5306-01-175-0980	119	10
0EJ14	70040	4820-01-375-3497	237	32
0LEB5	7025 454 121	2530-01-391-9921	158	11
09332	71001	5315-01-387-6180	168	4
09332	71002	5315-01-387-6191	168	7
35510	71057	5340-01-159-9530	KITS	
27647	7146	5305-01-397-5914	276	11
0TE27	7207-0663-5	4730-01-378-7846	268	7
0TE27	7207-86552	4730-01-377-6820	30	21
		4730-01-377-6820	268	16
0EJ14	73169	2540-01-394-9689	237	42
19207	7320641	5305-00-737-5694	63	15
19207	7320642	5340-00-732-0642	63	14
19207	7320658	5330-00-297-7106	63	12
35510	73450S	5310-00-517-6564	47	18
35510	73500	3110-01-302-9300	47	40
35510	73502	5305-00-461-5860	47	45
35510	73503	5305-01-080-4755	47	36
35510	73587	5315-01-113-0395	47	31
35510	73650	5308-00-177-5567	47	30
19207	7365486	5305-00-569-8846	58	13
0LEB5	7368 429 157	2530-01-392-2312	158	7
09990	745801	4820-01-418-0003	249	37
13445	74601-01	5905-01-407-0035	50	3
35510	74980	5330-00-838-6729	47	15
09990	75223-11	2940-01-417-9333	249	25
35510	75249		47	48
19207	7526015	6220-00-346-8943	60	15
		6220-00-346-8943	65	13
19207	7538146	5305-00-353-0969	59	12
2E480	75572	5970-01-375-7084	52	91
		5970-01-375-7084	53	107
2E480	75588	5970-01-375-7086	52	89
		5970-01-375-7086	53	105
35510	75777	5310-01-112-1740	47	19
0LEB5	7632 062 116		162	7
0LEB5	7632 140 102	5306-01-387-2267	162	4
0LEB5	7632 140 102	2915-01-375-7624	162	5

CROSS REFERENCE INDEXES

PART NUMBER INDEX

FSCM	PART NUMBER	STOCK NUMBER	FIGURE NO	ITEM NO
0LEB5	7632 319 110	6680-01-387-4987	162	6
0LEB5	7632 319 114		268	17
0LEB5	7632 472 424	2530-01-399-4207	162	1
0LEB5	7632-002-144	2940-01-387-4397	162	2
0LEB5	7633 222 102	5340-01-378-3990	162	8
19207	7714911	5310-00-771-4911	171	8
19207	7731428	5935-00-773-1428	73	12
35510	77481	5310-01-158-9216	47	29
35510	78138	2920-01-077-0911	47	37
35510	78302	5310-01-112-1738	47	49
35510	78354		47	26
35510	78433	2920-01-121-0168	47	17
35510	78494	5340-01-109-4609	47	7
4L145	79-08	3990-01-418-8756	212	4
35510	79144	2920-01-147-2208	47	41
19207	7951286	5310-00-789-0398	245	17
19207	7972328-1	5305-01-367-9250	60	16
		5305-01-367-9250	65	11
19207	7973325	9905-00-409-8948	256	6
19207	7973326	9905-00-901-2942	255	6
62226	8.5744	2540-01-360-8047	203	5
62226	8.5745	2540-01-360-8046	202	9
62226	8.5746	2540-01-K65-4312	283	9
62226	8.5947	2540-01-399-0878	201	5
62226	8.5948	2540-01-414-1245	201	5
81343	8-10 070120C	4730-01-074-0907	252	16
81343	8-130109E-S	4730-01-133-9017	142	1
81343	8-4 100202BA	4730-01-115-7362	153	7
81343	8-6 010103BA	4730-01-213-8473	139	38
81343	8-6 010202BA (E1)	4730-00-254-6215	146	4
81343	8-6 010302B	4730-00-130-4235	139	25
81343	8-6 100202BA	4730-01-095-7717	135	13
		4730-01-095-7717	137	6
		4730-01-095-7717	144	2
		4730-01-095-7717	151	14
		4730-01-095-7717	152	2
81343	8-6 100203BA	4730-01-134-1279	137	15
		4730-01-134-1279	139	12
81343	8-6 100302BA	4730-01-091-2809	137	4
		4730-01-091-2809	141	1
		4730-01-091-2809	151	4
		4730-01-091-2809	152	14
		4730-01-091-2809	153	12
81343	8-6 130140C	4730-01-420-5910	43	35
81343	8-6140137C	4730-00-952-3180	135	8
		4730-00-952-3180	138	24
81343	8-6-6 100425BA	4730-01-106-3975	137	16
81343	8-6-8 010424BA	4730-01-378-8084	146	11
81343	8-8 010202B	4730-00-254-6229	146	9
81343	8-8 100102BA	4730-01-134-7759	136	1
		4730-01-134-7759	138	14
		4730-01-134-7759	143	6

CROSS REFERENCE INDEXES

PART NUMBER INDEX

FSCM	PART NUMBER	STOCK NUMBER	FIGURE NO	ITEM NO
81343	8-8 100202BA	4730-01-115-6643	138	17
		4730-01-115-6643	139	6
		4730-01-115-6643	142	7
		4730-01-115-6643	143	4
81343	8-8 100302BA	4730-01-079-3275	138	21
81343	8-8 130239B	4730-00-081-8313	138	9
81343	8-8-4 100425BA	4730-01-134-0856	140	2
		4730-01-134-0856	145	5
81343	8-8-8 130424BA	4730-01-095-2034	138	8
11083	8C6364	5306-01-411-5012	31	6
78640	8L2786	5330-00-973-8301	17	6
15526	8MMDIN6799	5325-00-405-5649	36	15
11083	8M2772	5340-00-426-4803	29	8
11083	8M4445	5330-00-914-5821	16	20
11083	8M9024	5310-00-470-5567	23	12
		5310-00-470-5567	29	31
11083	8S0602	4910-01-032-3128	289	19
11083	8T0100	5305-01-360-1000	12	1
		5305-01-360-1000	23	13
		5305-01-360-1000	27	7
11083	8T0151	4820-01-360-2394	29	27
11083	8T0267	5306-01-360-1969	288	28
11083	8T0276	5305-01-360-1008	16	15
		5305-01-360-1008	23	15
11083	8T0293	5306-01-360-1632	5	7
11083	8T0644	5305-01-360-1708	44	8
11083	8T0657	5305-01-360-9088	4	2
11083	8T3282	5365-01-360-1034	4	1
11083	8T3666	5305-01-360-0999	7	3
11083	8T4121	5310-01-352-2753	3	2
		5310-01-352-2753	12	12
11083	8T4136	5306-01-360-1634	3	1
11083	8T4137	5306-01-360-0928	12	11
11083	8T4177	5306-01-360-1940	288	15
11083	8T4186	5306-01-360-0932	7	8
11083	8T4189	5306-01-360-0927	8	10
		5306-01-360-0927	12	23
11083	8T4196	5305-01-360-1996	8	5
11083	8T4200	5305-01-360-1703	27	12
		5305-01-360-1703	29	18
11083	8T4224	5310-01-359-8806	8	9
		5310-01-359-8806	12	22
		5310-01-359-8806	27	13
		5310-01-359-8806	29	17
11083	8T5030	5305-01-360-1989	4	3
11083	8T5035	5305-01-360-1003	24	4
11083	8T7044	5307-01-360-0988	24	3
11083	8T7352	5306-01-360-1941	288	16
11083	8T7547	5305-01-360-1011	8	7
		5305-01-360-1011	29	6
11083	8T8442	5305-01-360-0990	12	24
		5305-01-360-0990	25	5

CROSS REFERENCE INDEXES

PART NUMBER INDEX

FSCM	PART NUMBER	STOCK NUMBER	FIGURE NO	ITEM NO
44940	800-2010	5305-01-356-9468	60	2
		5305-01-356-9468	263	7
72915	8040313	4730-00-439-1722	137	12
OLEB5	8098 955 146	2530-01-372-4250	159	12
0EJ14	81433-G	3110-01-375-4194	237	56
0EJ14	81434	3110-01-228-7663	237	19
0EJ14	81626	3120-01-397-8140	237	74
16004	82045	5306-01-102-2645	263	3
78500	83280W8187	2530-01-391-0773	133	6
		2530-01-391-0773	134	10
19207	8338566	5935-00-572-9180	60	5
		5935-00-572-9180	63	8
		5935-00-572-9180	65	16
19207	8338567	5310-00-833-8567	60	6
		5310-00-833-8567	63	9
		5310-00-833-8567	65	15
19207	8349323	5310-00-571-6809	154	19
		5310-00-571-6809	160	7
19204	8442242	4730-00-065-0521	43	28
08556	8501 KX13V20		231	16
19207	8501 KX13V53		231	10
56365	8501NR82	5935-01-362-6592	231	17
54905	861H		202	6
19207	8694381	5310-00-282-8830	171	1
14933	87096-012	5935-01-323-6812	52	29
		5935-01-323-6812	53	33
14933	87097-006	5935-01-324-0563	52	40
		5935-01-324-0563	53	49
037Z3	87097-012	5935-01-323-8570	52	32
		5935-01-323-8570	53	36
19207	8711054	4720-00-809-2428	BULK	91
19207	8741435	5310-00-241-6921	59	15
19207	8741437	5305-00-832-5743	59	9
19207	8741441	5340-00-182-3726	59	5
19207	8741442	5325-00-088-6147	59	4
19207	8741446	5325-00-832-5650	59	10
19207	8741447	6220-00-998-6142	59	13
19207	8741461	6220-00-443-0589	59	14
19207	8741492	5935-00-807-4109	59	3
11139	88049-24-03PN	5935-01-384-3582	262	2
98441	881-16	4720-00-882-1379	BULK	92
11757	9-P069	3040-01-362-1772	239	14
11083	9B7233	5310-00-559-0070	49	2
11083	9G3667	5935-01-156-7789	84	13
11083	9G3695	5935-01-152-2677	52	12
		5935-01-152-2677	53	12
11083	9L7669	5310-00-155-5084	9	8
11083	9L9188	5360-00-175-2701	16	12
		5360-00-175-2701	20	3
11083	9M1974	5310-00-432-4064	12	4
		5310-00-432-4064	16	2
		5310-00-432-4064	18	3

CROSS REFERENCE INDEXES

PART NUMBER INDEX

FSCM	PART NUMBER	STOCK NUMBER	FIGURE NO	ITEM NO
		5310-00-432-4064	20	6
		5310-00-432-4064	21	1
		5310-00-432-4064	23	2
		5310-00-432-4064	27	11
		5310-00-432-4064	29	7
		5310-00-432-4064	31	14
		5310-00-432-4064	33	5
		5310-00-432-4064	43	3
11083	9M2904	5340-01-165-5721	22	5
11083	9M4849	5330-00-847-4351	27	6
11083	9N3832	5306-01-205-5360	9	7
11083	9N869	5310-01-147-5110	22	3
11083	9S1350	5340-00-426-4794	29	16
11083	9S4182	5340-01-360-1691	8	4
		5340-01-360-1691	12	32
11083	9S4185	5365-00-763-0120	8	2
11083	9S4191	5365-00-411-4584	29	20
		5365-00-411-4584	33	2
11083	9S8003	5365-01-035-4899	4	5
11083	9S8004	5365-01-036-0010	17	9
		5365-01-036-0010	43	6
11083	9S8006		5	12
11083	9S8008	4730-01-064-3790	5	5
11083	9U5120	5120-01-363-2795	288	25
11083	9X2305	5305-01-360-1991	10	9
11083	9X6005	5305-01-360-1010	15	7
11083	9X6620	4730-01-360-4179	27	2
11083	9X8256	5310-01-415-1606	31	25
11083	9X8267	5310-01-439-0845	25	6
11083	9X8318	5330-01-360-9098	KITS	
11083	9X8916	5306-01-360-1633	5	11
11083	9Y1582	2815-01-360-4711	14	9
11083	9Y4634	5330-01-360-5930	154	13
11083	9Y4832	2815-01-361-8317	14	10
11083	9Y4973	2815-01-362-5763	14	4
11083	9Y5295	4730-01-360-2372	31	17
11083	9Y6166	2815-01-360-5479	4	8
11083	9Y6668	5340-01-360-1210	12	2
11083	9Y7451	2815-01-361-2366	8	1
11083	9Y8534	2815-01-407-5718	14	7
11083	9Y8848	2815-01-361-8313	15	5
11083	9Y9293	2520-01-398-8321	16	14
11083	9Y9854	4710-01-371-1511	18	5
82484	900.032	5330-01-378-7541	241	8
0FW39	90000001	5120-01-360-1918	287	3
0FW39	90000003	5120-01-412-1818	287	2
51377	9002-00491-68	5330-01-393-5630	45	15
51377	9002-00741-58	5330-01-195-1500	45	14
01276	900729-001	5340-01-439-0843	30	6
32537	902466-22	4730-00-196-1467	136	7
82484	907.108	5310-01-375-6890	241	13
		5310-01-375-6890	241	13

CROSS REFERENCE INDEXES

PART NUMBER INDEX

FSCM	PART NUMBER	STOCK NUMBER	FIGURE NO	ITEM NO
82484	908.718	5310-01-375-2159	241	10
94222	91-99-111-12	4030-01-433-7225	182	11
82484	910.075	5310-01-375-7167	241	9
82484	913 328	5935-01-351-4732	52	4
		5935-01-351-4732	53	4
		5935-01-351-4732	104	13
66842	9160078		232	5
66842	9160085		232	7
01943	91620-A	6680-01-374-4912	112	1
09769	926474-1		76	6
05779	931558	2940-01-363-4377	254	23
15526	933-M16X50	5305-01-071-7162	7	15
15526	933-M6X12	5305-01-184-1937	52	100
		5305-01-184-1937	55	1
		5305-01-184-1937	182	20
		5305-01-184-1937	185	6
		5305-01-184-1937	194	20
		5305-01-184-1937	205	6
15526	933-M8X20	5305-01-341-8926	46	49
		5305-01-341-8926	68	5
		5305-01-341-8926	149	4
		5305-01-341-8926	152	5
		5305-01-341-8926	154	4
		5305-01-341-8926	180	4
		5305-01-341-8926	196	1
		5305-01-341-8926	201	4
		5305-01-341-8926	202	3
		5305-01-341-8926	247	10
		5305-01-341-8926	252	14
		5305-01-341-8926	257	18
		5305-01-341-8926	283	8
24234	936185	2540-01-421-4591	245	10
98749	9375410-7	5325-01-435-6359	227	4
0EJ14	9401		KITS	
0EJ14	9402	2590-01-374-2510	KITS	
0EJ14	9403	5330-01-344-2572	KITS	
7Z588	9408	4730-01-368-9805	257	3
63208	941-062		268	41
7Z588	9410	4730-01-368-9806	161	17
		4730-01-368-9806	245	3
		4730-01-368-9806	257	19
73342	9410206	4730-01-360-6216	125	8
7Z588	9420	4730-01-212-9613	41	31
		4730-01-212-9613	124	6
		4730-01-212-9613	161	10
		4730-01-212-9613	257	26
		4730-01-212-9613	264	13
		4730-01-212-9613	268	12
73342	9425115	5306-01-360-1939	36	24
5V437	95-04-11-TM2	5360-01-439-2300	209	8
5V437	95-04-11-TM3	5360-01-439-3864	209	6
35510	95146	2530-01-154-7768	47	28

CROSS REFERENCE INDEXES

PART NUMBER INDEX

FSCM	PART NUMBER	STOCK NUMBER	FIGURE NO	ITEM NO
1CW22	95505	5945-01-383-5900	57	1
35510	95656	2920-01-196-7730	47	27
35510	95770	5970-01-308-0374	47	6
24161	9580	3030-00-844-4456	46	60
0B8Y6	9604792-001	5330-01-429-3089	30	13
0B8Y6	9604925-005		30	12
0EJ14	9612	5330-01-357-0846	237	30
0EJ14	9628-G		237	33
0EJ14	9629-G		237	34
58864	9637		237	41
0EJ14	9638	5330-01-344-2573	KITS	
0EJ14	9675		237	55
94222	97-50-330-12	5340-01-387-6193	205	14
35510	97439	2520-01-187-3619	47	42
35510	97799	5330-01-079-6372	47	44
27647	980074 5553	5305-01-210-4967	276	23
0EJ14	9804		237	11
81860	9810145-02	5310-01-201-9955	277	16
06004	9820378	5315-00-058-9774	218	17
78500	983-92-49-496	2520-01-361-5148	128	3
78500	983-92-49-502	2520-01-361-6431	128	6
0EJ14	9839		237	37
0EJ14	9842		237	36
0EJ14	9844	5330-01-269-6079	237	49
0EJ14	9848		237	54
0EJ14	9851	5330-01-268-0914	237	27
0EJ14	9852	5365-01-224-2304	237	28
0EJ14	9853	5330-01-267-9017	237	25
0EJ14	9854	5365-01-224-2305	237	24
0EJ14	9897		237	58
34914	990 3861	5310-01-155-1911	21	10
		5310-01-155-1911	26	29
		5310-01-155-1911	37	4
		5310-01-155-1911	46	50
		5310-01-155-1911	78	32
		5310-01-155-1911	124	3
		5310-01-155-1911	137	2
		5310-01-155-1911	139	8
		5310-01-155-1911	140	3
		5310-01-155-1911	141	7
		5310-01-155-1911	142	10
		5310-01-155-1911	143	10
		5310-01-155-1911	144	4
		5310-01-155-1911	145	8
		5310-01-155-1911	147	2
		5310-01-155-1911	149	3
		5310-01-155-1911	154	3
		5310-01-155-1911	172	2
		5310-01-155-1911	185	14
		5310-01-155-1911	190	3
		5310-01-155-1911	191	17
		5310-01-155-1911	195	9

CROSS REFERENCE INDEXES

PART NUMBER INDEX

FSCM	PART NUMBER	STOCK NUMBER	FIGURE NO	ITEM NO
		5310-01-155-1911	196	13
		5310-01-155-1911	201	3
		5310-01-155-1911	202	4
		5310-01-155-1911	203	4
		5310-01-155-1911	207	5
		5310-01-155-1911	241	19
		5310-01-155-1911	242	7
		5310-01-155-1911	245	8
		5310-01-155-1911	247	4
		5310-01-155-1911	252	11
		5310-01-155-1911	257	10
		5310-01-155-1911	258	17
		5310-01-155-1911	263	5
		5310-01-155-1911	264	15
		5310-01-155-1911	283	11
35510	99278	9390-01-204-7151	47	43
0EJ14	9955		237	35
0EJ14	9972	5330-01-359-2151	237	40
2AA56	999-000890		270	12
98171	9999039	2530-01-084-6975	134	4

CROSS REFERENCE INDEXES

NATIONAL STOCK NUMBER INDEX

STOCK NUMBER	FIGURE	ITEM
5340-00-005-0537	258	29
8315-00-006-9835	BULK	9
5340-00-007-6350	5	4
4730-01-011-2304	149	12
4730-00-011-2578	141	3
5315-00-013-7228	159	10
6240-00-014-2454	63	11
4730-00-014-4027	30	25
4730-00-014-4027	254	21
5310-00-014-5850	234	11
5310-00-014-5850	235	5
5310-00-014-5850	235	5
4730-00-019-1489	252	7
5330-00-020-0186	47	47
5305-00-021-3616	233	16
5305-00-021-3620	46	31
5340-00-027-8737	43	18
2940-00-029-0388	20	9
5330-00-038-4327	12	16
5310-00-038-9417	45	8
4730-00-041-2526	266	49
5310-00-043-0520	263	8
4730-00-044-4688	47	11
5310-00-045-3296	149	9
5310-00-045-3296	277	13
5310-00-045-5207	58	16
5310-00-045-5213	69	7
2540-00-047-3926	171	6
2640-00-050-1229	155	34
4730-00-050-4208	173	11
4730-00-050-4208	175	10
4730-00-050-4208	238	20
5305-00-050-9231	220	16
5305-00-051-0837	215	20
5315-00-051-6613	172	31
5305-00-052-6456	45	26
5305-00-052-6867	209	2
5305-00-052-9051	219	41
5305-00-052-9051	222	12
5305-00-052-9051	223	10
5305-00-054-5641	259	11
5305-00-054-5651	225	17
5305-00-054-5651	227	1
5305-00-054-6648	259	6
5305-00-054-6652	221	12
5305-00-054-6654	221	15
5305-00-054-6661	215	11
5305-00-054-6670	226	3
5305-00-054-6670	227	14
5305-00-054-6670	235	7
5305-00-054-6670	235	7
5305-00-054-6673	231	15
5305-00-054-6676	231	14
5305-00-054-6682	52	50
5305-00-054-6682	53	85
5999-00-057-2929	60	7
5999-00-057-2929	65	14
4730-00-057-5555	266	44
5315-00-058-6115	238	14
5315-00-058-9774	218	17
5305-00-059-3656	259	3
5305-00-059-3658	231	9
5305-00-059-3659	46	14
5305-00-059-3659	266	33
5305-00-059-3659	273	1
5305-00-059-3661	227	8
5305-00-059-3661	230	5
5305-00-059-3662	213	1
5305-00-059-3664	217	5
5305-00-059-3666	225	37
5305-00-059-4568	166	5
5310-00-059-9266	41	19
6240-00-060-4707	228	2
4710-00-060-8269	BULK	2
4730-00-065-0521	43	28
5305-00-068-0502	47	22
5305-00-068-0509	208	7
5305-00-068-0510	248	7
5305-00-068-0511	211	8
5310-00-068-5285	279	6
4730-00-069-1187	142	3
4730-00-069-1187	145	2
4730-00-069-1187	150	8
5305-00-071-2067	255	14
5305-00-071-2067	256	14
5305-00-071-2071	252	3
5305-00-071-2071	255	23
5305-00-071-2071	256	23
5305-00-071-2071	256	24
5305-00-071-2083	255	20
5305-00-071-2083	256	20
5305-00-071-2506	252	13
5305-00-071-2506	254	26
5325-00-074-3301	30	8
5325-00-074-3301	51	3
5325-00-074-3301	78	7
5325-00-074-3301	257	47
5325-00-074-3301	272	2
5330-00-074-3768	44	10
5925-00-074-9180	231	8
5310-00-079-1967	258	9
5310-00-080-6004	272	23
5310-00-081-4219	214	3
5310-00-081-4219	277	26

CROSS REFERENCE INDEXES

NATIONAL STOCK NUMBER INDEX

STOCK NUMBER	FIGURE	ITEM
5310-00-081-4219	278	5
5310-00-081-4219	278	5
4730-00-081-8313	138	9
5120-00-081-9074	288	26
5305-00-082-6721	221	8
5305-00-082-6721	225	42
5305-00-082-6721	232	12
5310-00-088-1251	189	9
5325-00-088-6147	59	4
4730-00-089-2515	12	30
3120-00-089-2707	47	16
4730-00-090-0832	139	33
4730-00-092-3883	268	15
3110-00-100-0570	130	5
3110-00-100-0570	132	5
3110-00-100-0589	129	35
3110-00-100-0589	131	22
3110-00-100-0609	130	25
3110-00-100-0609	132	25
3110-00-100-3532	239	9
3110-00-100-3568	130	6
3110-00-100-3568	132	6
3110-00-100-3611	129	34
3110-00-100-3611	131	21
3110-00-100-6170	113	17
5330-00-105-0339	16	3
5940-00-107-1481	71	18
5940-00-107-1481	80	4
5940-00-107-1481	82	7
5940-00-107-1481	84	8
5940-00-107-1481	85	16
5940-00-107-1481	86	24
5940-00-107-1481	101	5
5940-00-107-1481	259	20
9390-00-112-8047	47	10
6220-00-113-0986	230	1
5940-00-113-3145	71	19
5940-00-113-3145	84	11
5940-00-113-3145	86	12
5940-00-113-3147	76	7
5940-00-113-3147	84	10
5940-00-113-3147	85	7
5940-00-113-3147	86	13
5940-00-113-3148	86	23
5940-00-113-8179	52	16
5940-00-113-8179	53	16
5940-00-113-8183	52	84
5940-00-113-8183	53	99
5940-00-113-8184	53	50
5940-00-113-8190	281	18
5940-00-113-9819	83	7
5940-00-113-9819	84	17
5940-00-113-9819	85	10
5940-00-113-9819	86	19
5940-00-113-9819	87	10
5940-00-113-9819	88	15
5940-00-113-9820	84	9
5940-00-113-9820	85	8
5940-00-113-9820	86	11
5940-00-113-9820	87	9
5940-00-113-9820	88	16
5940-00-113-9821	86	22
5940-00-114-1300	71	17
5940-00-114-1300	80	6
5940-00-114-1300	84	7
5940-00-114-1300	86	10
5935-00-115-2306	52	41
5935-00-115-2306	53	51
5935-00-115-2306	85	9
5935-00-115-2307	71	15
5935-00-115-2307	79	2
5935-00-115-2307	80	5
5935-00-115-2307	82	6
5935-00-115-2307	84	6
5935-00-115-2307	85	6
5935-00-115-2307	101	4
5935-00-115-2307	266	67
5940-00-115-2677	262	5
5940-00-115-2678	96	2
5940-00-115-2679	94	6
5940-00-115-2679	95	6
5940-00-115-2679	96	6
5940-00-115-2683	93	2
5940-00-115-2684	92	2
5940-00-115-2684	93	6
5940-00-115-2684	99	2
5940-00-115-2684	100	2
5940-00-115-2686	91	2
5940-00-115-2686	97	6
5940-00-115-4995	94	2
5940-00-115-4995	95	2
5940-00-115-5004	91	6
5940-00-115-5004	97	2
5940-00-115-5004	98	2
5305-00-115-9526	63	2
5305-00-115-9526	65	1
5330-00-118-6559	12	35
5925-00-124-5015	232	9
4730-00-125-7979	135	16
4730-00-125-7979	151	13
5930-00-126-0527	225	38
4730-00-130-4235	139	25
6220-00-134-9098	60	3
5310-00-141-0447	155	12

CROSS REFERENCE INDEXES

NATIONAL STOCK NUMBER INDEX

STOCK NUMBER	FIGURE	ITEM
6240-00-143-3159	60	12
6240-00-143-3159	65	4
4730-00-143-3941	29	25
4730-00-143-3941	160	4
5940-00-143-4777	52	82
5940-00-143-4777	53	97
5940-00-143-4780	52	21
5940-00-143-4780	53	25
5940-00-143-4780	72	10
5940-00-143-4794	52	36
5940-00-143-4794	53	40
3110-00-144-9455	129	53
3110-00-144-9455	131	40
3110-00-144-9793	129	54
3110-00-144-9793	131	41
5305-00-151-5795	281	3
6240-00-152-2987	229	6
5310-00-155-5084	9	8
6240-00-155-8717	61	7
6240-00-155-8717	62	6
6240-00-155-8717	230	4
5310-00-159-1577	208	1
5310-00-167-0768	267	5
5330-00-167-5173	35	16
2540-00-168-2186	242	1
2540-00-168-2187	242	1
5305-00-171-2094	234	15
5310-00-171-2444	172	9
4730-00-172-0010	279	12
4730-00-172-0025	238	21
4730-00-172-0028	171	2
4730-00-172-0034	173	5
5330-00-172-1919	135	4
5330-00-172-1919	135	7
5330-00-172-1919	136	11
5330-00-172-1919	136	14
5999-00-172-8254	90	8
5305-00-174-4500	69	44
5365-00-174-8678	239	32
5365-00-174-8678	239	39
5360-00-175-2701	16	12
5360-00-175-2701	20	3
5310-00-176-6521	155	23
5310-00-176-6525	155	23
5310-00-177-0994	217	10
5310-00-177-0994	221	6
5305-00-177-5567	47	30
5305-00-177-5568	47	35
4730-00-177-6166	12	29
4730-00-177-6166	266	46
5940-00-177-6760	260	12
5310-00-177-7628	225	32
5975-00-178-1216	BULK	89
5975-00-178-1218	BULK	62
6220-00-179-4324	60	13
6220-00-179-4325	65	7
5305-00-179-8946	50	6
5305-00-180-1991	218	20
5306-00-182-1514	217	11
5340-00-182-3726	59	5
5315-00-182-9723	216	12
5310-00-184-8971	58	12
5310-00-184-8971	69	8
5310-00-184-8977	231	4
5310-00-184-9562	52	86
5310-00-184-9562	53	101
4030-00-185-0487	165	5
4030-00-185-0487	167	11
5315-00-187-9382	188	42
5315-00-187-9382	253	15
5315-00-187-9382	283	21
5315-00-187-9393	188	6
5315-00-187-9394	250	7
5315-00-187-9394	251	3
4010-00-188-1643	189	30
4010-00-188-1643	221	11
4730-00-188-3507	254	20
5340-00-190-6767	258	33
5340-00-190-6812	263	2
5935-00-192-6336	266	55
4730-00-194-4518	252	49
4730-00-196-1467	136	7
4730-00-196-1482	189	20
9905-00-198-2728	246	7
4730-00-200-0531	41	26
5315-00-200-3183	219	21
9905-00-202-3639	243	2
5975-00-204-9190	BULK	85
9905-00-205-2795	244	2
5305-00-206-2508	58	14
5305-00-207-8253	52	83
5305-00-207-8253	53	98
5305-00-207-8253	217	6
5305-00-207-8253	221	1
5305-00-207-8253	233	12
5305-00-207-8253	266	16
5310-00-208-4023	38	11
5310-00-208-4023	39	10
5310-00-209-0788	52	61
5310-00-209-0788	53	75
5310-00-209-0788	78	19
5310-00-209-1366	61	5
5310-00-209-1366	62	4
5306-00-211-8002	282	4

CROSS REFERENCE INDEXES

NATIONAL STOCK NUMBER INDEX

STOCK NUMBER	FIGURE	ITEM
4730-00-221-2140	255	21
4730-00-221-2140	256	21
5305-00-225-3843	213	21
5305-00-225-3843	266	50
5306-00-225-8498	277	19
5306-00-225-8503	278	3
5306-00-225-8503	278	3
5306-00-226-4822	277	25
5306-00-226-4835	270	7
5940-00-230-0515	71	20
4730-00-230-8740	138	6
4730-00-230-8740	139	23
5410-00-231-6429	217	8
5935-00-233-3990	267	10
5315-00-234-1861	149	24
5315-00-234-1863	209	5
5935-00-235-8970	75	5
5315-00-237-7589	239	47
5310-00-238-7560	239	11
5310-00-241-6638	218	27
5310-00-241-6638	219	31
5310-00-241-6638	220	23
5310-00-241-6666	163	32
5310-00-241-6666	164	22
5310-00-241-6666	207	21
5310-00-241-6921	59	15
5310-00-245-3612	234	6
5310-00-245-8826	218	12
5310-00-245-8826	219	14
5310-00-245-8826	220	6
5330-00-247-4174	247	62
4730-00-247-9105	150	2
5330-00-248-3847	218	36
4730-00-249-9714	135	17
4730-00-249-9714	139	39
5310-00-250-9477	52	70
5310-00-250-9477	53	83
5310-00-250-9477	266	6
5330-00-251-8839	252	5
5305-00-253-5627	255	5
5305-00-253-5627	256	5
4720-00-254-5957	BULK	79
4730-00-254-6215	146	4
4730-00-254-6228	142	8
4730-00-254-6228	143	8
4730-00-254-6229	146	9
5310-00-261-7156	259	4
5310-00-261-8278	58	15
5325-00-262-9162	266	14
5325-00-263-6632	205	7
5325-00-263-6632	240	9
2590-00-264-8828	284	5
4730-00-266-0533	137	20
4730-00-266-0534	138	37
4730-00-266-0534	268	9
4730-00-266-0543	285	3
5306-00-268-2440	218	40
5306-00-268-2440	219	6
5306-00-268-2440	220	19
5305-00-269-3221	274	15
5305-00-269-3234	155	9
5305-00-269-3240	267	6
5310-00-269-4040	279	3
5310-00-269-4040	281	15
6240-00-270-6824	50	55
5310-00-274-4546	47	4
5310-00-274-8041	8	31
4730-00-277-5736	266	42
4730-00-278-2523	34	10
4730-00-278-2523	41	27
4730-00-278-2523	258	10
4730-00-278-2523	264	20
4730-00-278-2523	268	18
4730-00-278-4311	43	36
4720-00-278-4892	BULK	75
4730-00-278-6242	35	12
5310-00-282-8830	171	1
5940-00-283-5281	52	85
5940-00-283-5281	53	100
5330-00-285-9842	252	17
5330-00-285-9842	252	21
5330-00-285-9842	252	25
4730-00-287-1701	268	3
4730-00-287-1875	43	32
4730-00-289-4736	146	5
5330-00-291-9572	20	10
4730-00-293-3592	151	12
5975-00-296-1669	281	13
5340-00-297-6637	271	19
5330-00-297-7106	63	12
5330-00-298-0190	281	9
6210-00-299-6656	259	22
6220-00-299-7425	61	9
6220-00-299-7425	230	3
6220-00-299-7426	62	8
6220-00-299-7426	230	3
5930-00-307-8856	50	1
9320-00-324-5629	BULK	63
5330-00-339-6224	29	1
6220-00-346-8943	60	15
6220-00-346-8943	65	13
5310-00-350-2655	64	7
5305-00-353-0969	59	12
5310-00-362-7988	5	8

CROSS REFERENCE INDEXES

NATIONAL STOCK NUMBER INDEX

STOCK NUMBER	FIGURE	ITEM
5340-00-374-1831	225	35
5330-00-385-7587	18	1
5310-00-397-4524	45	25
5925-00-399-5055	231	7
5310-00-400-5503	234	19
5310-00-402-5220	46	28
5310-00-402-5220	273	41
5310-00-403-5855	213	18
5310-00-403-5855	216	7
5325-00-405-5649	36	15
5330-00-406-0883	177	5
4730-00-407-0571	136	5
4730-00-407-0571	139	1
4730-00-407-0571	146	8
4730-00-407-0571	285	6
5310-00-407-9566	45	7
5310-00-407-9566	214	2
5310-00-407-9566	277	27
5310-00-407-9566	278	6
5310-00-407-9566	278	6
9905-00-409-8948	256	6
5340-00-410-6762	4	6
5340-00-410-6762	5	3
5365-00-411-4584	29	20
5365-00-411-4584	33	2
5925-00-413-1210	232	11
5310-00-413-4838	216	6
4730-00-420-4441	252	40
5310-00-426-2651	217	1
5340-00-426-4794	29	16
5340-00-426-4803	29	8
5310-00-432-4064	12	4
5310-00-432-4064	16	2
5310-00-432-4064	18	3
5310-00-432-4064	20	6
5310-00-432-4064	21	1
5310-00-432-4064	23	2
5310-00-432-4064	27	11
5310-00-432-4064	29	7
5310-00-432-4064	31	14
5310-00-432-4064	33	5
5310-00-432-4064	43	3
5940-00-436-1632	53	73
4730-00-439-1722	137	12
6220-00-443-0589	59	14
4730-00-443-4738	251	9
4720-00-443-4746	BULK	54
4720-00-443-4746	137	17
4720-00-443-4746	139	27
4720-00-443-4746	153	9
4720-00-443-4746	189	4
4720-00-443-4746	247	19
4720-00-443-4746	285	14
5340-00-455-5899	284	4
5305-00-461-5860	47	45
5330-00-462-0907	60	9
5330-00-463-0200	65	6
5310-00-463-0268	59	6
4730-00-469-7797	138	34
4730-00-469-7797	150	12
4730-00-469-7797	152	1
4730-00-469-7797	153	13
5310-00-470-5567	23	12
5310-00-470-5567	29	31
4730-00-473-8357	137	22
4730-00-473-8357	266	20
4730-00-473-8357	285	1
5305-00-477-0120	69	55
5330-00-477-0338	26	15
8105-00-477-3716	255	25
8105-00-477-3716	256	28
5310-00-480-7606	155	12
5310-00-482-1999	47	38
5360-00-482-4422	133	15
5360-00-482-4422	134	19
5330-00-483-2296	239	25
5330-00-483-2296	239	31
5340-00-489-5684	210	11
5310-00-490-4639	182	23
5330-00-498-2906	31	10
6240-00-499-6278	50	56
5310-00-508-5439	47	8
4730-00-511-1677	135	12
4730-00-511-1677	137	9
4730-00-511-1677	138	36
4730-00-511-1677	150	10
4730-00-511-1677	151	3
4730-00-511-1677	152	15
4730-00-511-1677	153	11
4730-00-511-1677	268	21
5305-00-514-8005	263	14
5310-00-515-7449	218	8
5310-00-515-7449	219	10
3110-00-516-5490	239	36
5310-00-517-6564	47	18
5305-00-521-8636	247	33
5310-00-527-3634	52	69
5310-00-527-3634	53	82
5310-00-527-3634	78	14
5330-00-527-7939	44	9
5975-00-539-6414	225	7
4720-00-542-4688	BULK	80
5306-00-543-4405	52	87
5306-00-543-4405	53	102

CROSS REFERENCE INDEXES

NATIONAL STOCK NUMBER INDEX

STOCK NUMBER	FIGURE	ITEM
5310-00-550-5054	266	8
5940-00-557-1630	72	9
3110-00-557-6163	127	73
6150-00-557-7653	259	21
6150-00-557-7656	259	9
5310-00-559-0070	49	2
5330-00-562-1073	27	8
9905-00-565-6267	246	25
5305-00-569-8846	58	13
5925-00-570-4602	259	7
5310-00-571-6809	154	19
5310-00-571-6809	160	7
5935-00-572-9180	60	5
5935-00-572-9180	63	8
5935-00-572-9180	65	16
5306-00-576-0529	214	1
5330-00-576-4626	247	76
6240-00-578-6763	269	6
5330-00-579-6495	16	5
5330-00-579-6495	29	14
5330-00-579-6495	47	32
5935-00-581-1080	266	65
5310-00-582-5677	218	31
5310-00-582-5677	233	14
5310-00-582-5677	234	17
5310-00-582-5677	266	51
5310-00-582-5965	59	7
5310-00-584-5272	255	10
5310-00-584-5272	256	10
4730-00-595-3108	138	10
5310-00-595-6057	215	15
5310-00-595-6211	225	18
5310-00-595-6211	227	10
5310-00-596-7693	269	8
5315-00-597-2723	130	35
5315-00-597-2723	132	35
5340-00-598-4151	263	9
3110-00-606-9577	130	30
3110-00-606-9577	132	30
5330-00-613-6500	4	4
5305-00-613-7439	215	12
5310-00-614-3505	218	13
5310-00-614-3505	219	15
5310-00-614-3505	220	5
5310-00-615-1556	266	31
5930-00-615-7952	231	6
5310-00-616-2973	231	3
5310-00-616-3823	221	14
5315-00-616-5525	6	5
5315-00-616-5525	11	4
5310-00-616-6354	78	10
5310-00-616-6354	102	10
6240-00-617-0991	60	11
6240-00-617-0991	63	10
6240-00-617-0991	65	5
5930-00-617-9718	270	35
6685-00-618-1822	255	4
6685-00-618-1822	256	4
5310-00-619-1148	213	3
5310-00-619-1148	227	6
4730-00-623-9673	257	42
5310-00-625-5756	217	14
5310-00-623-5756	218	23
5310-00-625-5757	219	30
5310-00-623-5757	220	12
4820-00-633-3523	138	16
6145-00-635-9459	BULK	5
4820-00-637-2576	237	9
5310-00-637-9541	58	3
5310-00-637-9541	63	1
5310-00-637-9541	64	8
5310-00-637-9541	65	2
5310-00-637-9541	211	3
5310-00-637-9541	272	22
5310-00-637-9541	274	14
5305-00-638-8920	237	60
4730-00-639-9882	258	8
2910-00-646-9727	35	4
4730-00-647-3207	154	10
5930-00-655-4241	231	20
5930-00-655-4247	231	2
5940-00-660-3633	272	34
4720-00-670-6037	BULK	76
5120-00-677-2259	289	17
4730-00-679-9280	249	8
4730-00-679-9280	250	14
5325-00-682-1762	31	2
5310-00-682-5930	216	3
2590-00-683-0598	68	2
5935-00-683-1229	266	63
5930-00-683-1626	270	30
5305-00-702-4523	266	36
4730-00-706-8711	16	18
4730-00-710-5571	252	4
5305-00-717-5467	215	13
4730-00-719-2708	189	26
5305-00-719-3997	52	64
5305-00-719-3997	53	78
5305-00-719-3997	266	9
5305-00-719-5003	215	19
5305-00-719-5240	172	8
5306-00-720-8258	218	29
5306-00-720-8258	219	5
5306-00-720-8258	220	21

CROSS REFERENCE INDEXES

NATIONAL STOCK NUMBER INDEX

STOCK NUMBER	FIGURE	ITEM
5306-00-720-8259	218	28
5306-00-720-8259	219	4
5306-00-720-8259	220	22
5306-00-720-8260	218	22
5306-00-720-8260	219	29
5306-00-720-8260	220	11
5305-00-724-7247	279	7
5935-00-725-0887	235	14
5305-00-725-2317	211	7
5340-00-725-5280	70	1
5310-00-725-7671	247	44
5310-00-725-7674	247	72
4730-00-726-1103	138	26
5305-00-727-2283	155	31
6210-00-727-6418	229	4
5970-00-727-6728	261	4
2920-00-728-2040	47	23
5310-00-732-0558	64	9
5310-00-732-0558	272	24
5310-00-732-0560	255	16
5310-00-732-0560	256	15
5340-00-732-0642	63	14
5305-00-737-5694	63	15
5940-00-738-6272	69	27
6220-00-741-1843	230	1
9905-00-752-4649	52	6
9905-00-752-4649	53	6
9905-00-752-4649	71	14
9905-00-752-4649	76	8
9905-00-752-4649	79	3
9905-00-752-4649	80	3
9905-00-752-4649	81	3
9905-00-752-4649	82	5
9905-00-752-4649	83	6
9905-00-752-4649	84	5
9905-00-752-4649	85	5
9905-00-752-4649	86	8
9905-00-752-4649	87	8
9905-00-752-4649	88	14
9905-00-752-4649	90	6
9905-00-752-4649	101	3
9905-00-752-4649	104	11
9905-00-752-4649	266	66
5315-00-753-3894	219	20
5315-00-753-3895	169	8
5315-00-753-3895	170	2
5977-00-758-9555	47	14
5310-00-761-6882	266	48
5365-00-763-0120	8	2
5310-00-763-3413	52	55
5310-00-763-3413	53	68
5310-00-763-3413	78	20
5310-00-763-3413	220	18
5310-00-763-3413	233	4
1095-00-763-7348	284	3
5310-00-763-8901	154	16
5310-00-763-8913	129	7
5310-00-765-3197	281	20
5310-00-768-0318	69	36
5310-00-768-0318	255	9
5310-00-768-0318	256	9
5310-00-768-0318	270	24
5310-00-768-0319	59	1
5310-00-768-0319	59	8
5310-00-771-4911	171	8
5935-00-773-1428	73	12
5310-00-773-7618	211	4
5310-00-773-7618	234	5
5310-00-775-5139	47	25
5310-00-775-5182	47	21
5325-00-783-4754	249	12
5325-00-783-4754	250	9
5310-00-789-0398	245	17
5310-00-802-4701	69	29
5365-00-804-2025	277	1
5330-00-804-5694	160	2
5330-00-804-5695	29	34
5330-00-804-5695	239	4
5330-00-805-2966	247	8
5330-00-805-2966	248	3
5330-00-805-2966	248	9
5330-00-805-2966	248	11
5330-00-805-2966	249	23
5330-00-805-2966	249	42
5330-00-805-2966	251	6
5330-00-805-2966	251	12
5330-00-805-2966	253	2
5310-00-807-1469	217	15
5935-00-807-4109	59	3
5330-00-808-0794	30	24
5330-00-808-0794	43	23
5330-00-808-0794	252	33
5310-00-808-8019	134	7
5340-00-809-1500	3	12
5340-00-809-1500	70	8
4720-00-809-2428	BULK	91
5310-00-809-4058	158	15
5310-00-809-4058	205	16
5310-00-809-4058	213	19
5310-00-809-4058	225	43
5310-00-809-4058	242	3
5310-00-809-4058	263	15
5310-00-809-5998	134	6
5310-00-809-5998	255	18

CROSS REFERENCE INDEXES

NATIONAL STOCK NUMBER INDEX

STOCK NUMBER	FIGURE	ITEM
5310-00-809-8546	277	14
4730-00-809-9427	43	29
4730-00-811-1848	250	6
5310-00-811-6419	270	29
5315-00-811-9107	218	6
5315-00-811-9107	219	7
5315-00-814-3531	237	71
5315-00-815-1405	36	31
2530-00-815-3176	157	3
5330-00-816-3546	252	8
5330-00-816-3546	252	39
5330-00-816-3546	252	41
4730-00-817-6578	268	5
4730-00-822-5609	43	9
4730-00-822-5609	44	6
4730-00-822-5609	252	32
5310-00-827-8976	232	15
4730-00-828-0171	139	22
5935-00-828-6550	225	19
5315-00-828-8190	205	8
5330-00-828-8639	22	1
5325-00-832-5650	59	10
5305-00-832-5743	59	9
5330-00-832-9514	239	40
4730-00-833-4613	30	17
5310-00-833-8567	60	6
5310-00-833-8567	63	9
5310-00-833-8567	65	15
5310-00-834-8732	30	29
5310-00-835-2037	155	24
5310-00-835-2037	155	30
5920-00-836-7189	69	58
5330-00-838-6729	BULK	73
5340-00-839-1981	47	15
5975-00-839-6089	270	33
4730-00-840-7236	BULK	84
5310-00-841-2576	160	1
9905-00-841-4445	31	21
9905-00-841-4445	52	7
9905-00-841-4445	53	7
9905-00-841-4445	71	8
9905-00-841-4445	73	9
9905-00-841-4445	79	4
9905-00-841-4445	83	5
9905-00-841-4445	86	9
9905-00-841-4445	87	4
9905-00-841-4445	88	4
9905-00-841-4445	94	4
9905-00-841-4445	95	4
9905-00-841-4445	96	4
9905-00-841-4445	104	15
5935-00-842-6316	225	15
4730-00-842-7841	28	16
3030-00-844-4456	46	60
5935-00-846-3884	73	11
5315-00-846-8337	218	10
5315-00-846-8337	219	13
5340-00-847-0102	221	16
5330-00-847-4351	27	6
5935-00-849-3867	266	53
5320-00-850-3248	182	13
5310-00-852-8593	149	10
5315-00-853-3814	238	9
5330-00-855-8059	29	5
5310-00-857-5559	124	20
5330-00-865-0404	31	16
4730-00-873-0110	43	33
5940-00-874-9033	52	5
5940-00-874-9033	53	5
5940-00-874-9033	76	5
5940-00-874-9033	104	14
5310-00-877-5796	242	2
5935-00-878-5562	266	61
5935-00-879-3265	267	8
5310-00-880-5977	215	22
5310-00-880-5978	226	5
5310-00-880-5978	227	12
5310-00-880-5978	231	12
5315-00-880-6027	130	38
5315-00-880-6027	132	38
5310-00-880-7744	278	7
5310-00-880-7744	278	7
5310-00-880-7744	285	22
5310-00-881-1616	234	13
5310-00-881-1616	235	3
5310-00-881-1616	235	16
4720-00-882-1379	BULK	92
4720-00-882-1379	268	11
5310-00-883-9417	217	7
5310-00-883-9417	221	2
5310-00-889-2589	266	17
5305-00-889-2999	270	32
5305-00-889-3000	78	18
5305-00-889-3000	281	7
9905-00-893-3570	52	13
9905-00-893-3570	53	13
9905-00-893-3570	71	2
9905-00-893-3570	72	4
9905-00-893-3570	76	4
9905-00-893-3570	77	7
9905-00-893-3570	84	12
9905-00-893-3570	85	14
9905-00-893-3570	86	5
9905-00-893-3570	88	7

CROSS REFERENCE INDEXES

NATIONAL STOCK NUMBER INDEX

STOCK NUMBER	FIGURE	ITEM
9905-00-893-3570	91	4
9905-00-893-3570	92	4
9905-00-893-3570	93	4
9905-00-893-3570	97	4
9905-00-893-3570	98	4
9905-00-893-3570	99	4
9905-00-893-3570	100	4
9905-00-893-3570	104	2
9905-00-893-3570	261	4
9905-00-893-3570	262	4
9905-00-893-3570	266	54
9905-00-893-3570	266	58
9905-00-893-3570	266	62
9905-00-893-3570	267	9
5975-00-894-9234	225	26
5975-00-894-9234	229	1
4720-00-898-5108	BULK	78
5975-00-899-4606	258	23
4730-00-900-3296	45	13
9905-00-901-2942	255	6
4730-00-902-8991	146	3
5310-00-903-3994	69	9
5310-00-905-5454	231	5
4730-00-906-0721	252	20
4730-00-908-3193	21	7
4730-00-908-3193	258	12
4730-00-908-3194	26	34
4730-00-908-3195	149	14
4730-00-908-3195	266	28
4730-00-908-6292	257	33
4730-00-908-6292	263	4
4730-00-908-6293	26	26
4730-00-908-6293	268	36
4730-00-908-6294	26	23
4730-00-908-6294	26	25
4730-00-909-8627	26	37
4730-00-913-0766	41	25
4720-00-913-1937	BULK	10
4720-00-913-5910	BULK	82
5310-00-913-7020	31	26
5310-00-913-8881	69	28
5305-00-914-3821	214	9
5305-00-914-4171	214	6
5330-00-914-5821	16	20
4730-00-921-3245	285	5
5325-00-923-9512	42	9
5325-00-923-9512	249	10
5940-00-923-0085	52	52
5940-00-923-0085	53	65
5940-00-923-0085	79	6
5940-00-923-0085	80	2
5940-00-923-0085	81	2
5940-00-926-0085	101	2
5325-00-926-1394	78	35
5310-00-926-1852	257	6
6145-00-926-6300	BULK	11
5940-00-926-8162	225	8
5940-00-926-8162	234	4
5310-00-929-6452	233	2
5310-00-929-6454	211	2
5330-00-929-8171	43	10
4720-00-930-4515	BULK	77
5330-00-933-3305	49	4
5310-00-933-8118	225	14
5310-00-933-8118	227	2
5310-00-933-8118	235	10
5310-00-933-8119	52	56
5310-00-933-8119	53	69
5310-00-933-8119	78	21
5310-00-933-8119	215	10
5310-00-933-8119	226	4
5310-00-933-8119	231	13
5310-00-933-8120	213	2
5310-00-933-8120	217	4
5310-00-933-8120	220	17
5310-00-933-8120	227	7
5310-00-933-8120	230	6
5310-00-933-8120	233	3
5310-00-933-8120	234	10
5310-00-933-8120	235	6
5310-00-933-8120	235	6
5310-00-933-8120	259	16
5310-00-933-8120	266	32
5310-00-933-8121	216	9
5310-00-933-8121	232	14
5310-00-933-8121	233	13
5310-00-933-8121	234	18
5310-00-933-8121	266	5
5310-00-934-0222	214	10
5310-00-934-9747	52	60
5310-00-934-9747	53	74
5310-00-934-9747	78	25
5310-00-934-9747	281	11
5310-00-934-9748	225	13
5310-00-934-9748	235	9
5310-00-934-9757	269	9
5310-00-934-9757	281	16
5310-00-934-9759	52	57
5310-00-934-9759	53	70
5310-00-934-9759	78	22
5310-00-934-9761	61	4
5310-00-934-9761	62	3
5310-00-934-9765	259	8
4730-00-935-1528	264	37

CROSS REFERENCE INDEXES

NATIONAL STOCK NUMBER INDEX

STOCK NUMBER	FIGURE	ITEM
8315-00-935-6762	BULK	88
5940-00-937-5237	225	9
5940-00-937-5237	234	2
5310-00-938-2012	227	9
5330-00-939-0687	5	13
5330-00-939-0687	16	11
5330-00-939-0687	20	4
5310-00-941-6019	50	10
5310-00-941-6019	50	13
5310-00-941-6019	50	16
5310-00-941-6019	50	19
5310-00-941-6019	50	22
5310-00-941-6019	50	25
5310-00-941-6019	50	60
5310-00-941-6019	50	63
5310-00-941-6019	210	3
5340-00-943-6041	69	57
5330-00-944-8281	5	6
5330-00-944-8281	44	4
5940-00-945-2082	52	59
5940-00-945-2082	53	72
9905-00-945-7637	71	7
9905-00-945-7637	72	3
9905-00-945-7637	75	6
9905-00-945-7637	84	4
9905-00-945-7637	85	4
5330-00-948-6482	16	16
5330-00-948-6482	23	4
5330-00-948-6482	44	2
5940-00-950-7784	259	18
4730-00-952-3180	135	8
4730-00-952-3180	138	24
5305-00-954-8153	30	14
4730-00-958-1475	43	34
5310-00-964-7811	133	13
5310-00-964-7811	134	17
5310-00-970-4387	218	9
5310-00-970-4387	219	12
5330-00-973-8301	17	6
5310-00-974-6623	215	21
5305-00-978-9385	216	10
5305-00-978-9394	154	7
5305-00-978-9394	160	6
5310-00-982-6814	227	11
5305-00-983-6730	235	13
5305-00-983-8084	216	2
5310-00-984-3806	270	8
5310-00-984-3806	270	18
5305-00-984-4993	61	6
5305-00-984-4993	62	5
5305-00-984-6191	47	13
5305-00-984-6192	69	21
5305-00-984-6193	210	6
5305-00-984-6208	61	8
5305-00-984-6208	62	7
5305-00-984-6208	230	2
5305-00-984-6210	60	14
5305-00-984-6210	65	12
5975-00-984-6212	277	12
5975-00-984-6582	258	36
5310-00-984-7042	69	31
5310-00-984-7042	215	14
5310-00-984-7042	234	7
5305-00-989-7435	234	9
5935-00-990-5580	86	7
5305-00-990-8350	69	38
5305-00-992-6147	211	5
5305-00-993-1848	233	7
5330-00-998-6142	59	13
5320-00-999-0397	246	2
9905-00-999-7369	135	10
9905-00-999-7370	135	9
9905-01-K60-8907	246	9
9905-01-K60-8909	246	9
5120-01-K61-9491	289	8
5306-01-K62-5199	140	7
8145-01-K62-5221	255	2
2910-01-K62-5428	260	15
4530-01-K62-5438	260	61
2590-01-K62-5443	260	23
4320-01-K62-5455	260	65
2590-01-K63-1549	214	7
5305-01-K63-8222	249	6
5315-01-K63-8262	189	27
5305-01-K63-9355	249	19
5930-01-K64-0241	51	12
5330-01-K64-0283	245	43
5325-01-K64-0288	245	61
5355-01-K64-0289	245	28
5935-01-K64-0318	70	12
6150-01-K64-0321	80	1
5925-01-K64-0349	52	72
5925-01-K64-0349	53	87
6150-01-K64-0407	83	8
5305-01-K64-4066	172	37
5930-01-K64-6314	51	8
5850-01-K64-9178	105	10
2520-01-K64-9258	158	24
4730-01-K65-0946	159	13
4720-01-K65-1431	26	38
5340-01-K65-1448	38	5
2590-01-K65-1494	238	3
5330-01-K65-1499	195	27
4720-01-K65-1513	285	7

CROSS REFERENCE INDEXES

NATIONAL STOCK NUMBER INDEX

STOCK NUMBER	FIGURE	ITEM
5340-01-K65-1540	162	11
4710-01-K65-1574	124	10
4710-01-K65-1577	252	19
4720-01-K65-1578	252	18
4720-01-K65-1580	252	37
4720-01-K65-1582	252	23
4720-01-K65-1583	252	44
5340-01-K65-1602	191	8
5340-01-K65-1602	195	18
5340-01-K65-1603	191	8
5340-01-K65-1603	195	18
5330-01-K65-1652	194	18
5340-01-K65-3946	271	6
2540-01-K65-4312	283	9
5306-01-K65-4316	270	26
5306-01-K65-4335	163	17
5306-01-K65-4335	164	5
5306-01-K65-4337	41	11
5306-01-K65-4337	163	10
5306-01-K65-4337	164	12
5306-01-K65-4338	163	9
5306-01-K65-4338	164	11
4720-01-003-6706	BULK	6
5305-01-006-2052	69	5
5305-01-006-2052	69	49
5305-01-006-2053	26	19
5310-01-006-3919	270	23
4730-01-007-5232	154	8
4730-01-007-5232	247	7
4730-01-007-5232	248	10
4730-01-007-5232	251	11
4730-01-008-7827	146	7
4720-01-009-9058	BULK	55
4130-01-010-9170	BULK	90
5935-01-013-9680	52	24
5935-01-013-9680	53	28
5935-01-013-9680	72	6
4720-01-014-4915	BULK	7
4720-01-014-4915	BULK	53
4730-01-022-6066	8	23
3110-01-022-8163	130	31
3110-01-022-8163	132	31
5935-01-023-4871	52	17
4730-01-025-6805	248	2
4730-01-025-6805	251	5
4730-01-025-6805	253	1
4010-01-026-1855	BULK	52
4010-01-026-1855	166	2
5365-01-031-8183	23	5
5365-01-031-8183	44	3
4910-01-032-3128	289	19
5305-01-032-4165	46	4
5305-01-032-4165	273	14
5310-01-032-4169	76	16
5310-01-032-4169	273	3
5325-01-032-4222	273	17
5310-01-032-4827	46	15
5310-01-032-4827	273	2
5310-01-033-8615	213	20
5325-01-034-2757	273	13
5365-01-035-4899	4	5
5365-01-036-0010	17	9
5365-01-036-0010	43	6
3110-01-037-4661	273	12
5310-01-042-8391	46	33
5310-01-042-8391	273	38
3020-01-043-0193	239	58
3010-01-043-0932	239	42
3020-01-043-6178	239	50
5360-01-043-6239	239	59
5365-01-043-7954	239	56
5310-01-044-0774	239	19
2520-01-044-2482	239	44
5330-01-044-6592	239	28
5310-01-046-0186	46	42
5310-01-046-0186	273	9
4720-01-047-9541	BULK	50
5315-01-048-5055	221	10
5330-01-049-1292	8	3
5330-01-049-1292	12	33
5330-01-049-1292	29	3
5325-01-049-2049	196	12
5310-01-050-5005	273	23
5310-01-050-6565	46	27
5310-01-050-6565	273	42
5310-01-051-2360	13	2
6140-01-051-4900	69	25
5305-01-051-9899	239	34
5940-01-053-0654	266	68
4730-01-055-4013	189	25
4730-01-055-4013	285	13
5330-01-058-3788	35	10
5340-01-058-7384	208	6
5310-01-059-7130	129	4
5330-01-059-9593	160	8
5330-01-061-8003	8	8
4730-01-062-2570	152	10
5310-01-062-3384	133	17
5310-01-062-3384	134	23
5310-01-064-3613	205	5
5310-01-064-3613	205	11
4730-01-064-3790	5	5
5330-01-064-6284	239	43
5310-01-065-4786	270	34

CROSS REFERENCE INDEXES

NATIONAL STOCK NUMBER INDEX

STOCK NUMBER	FIGURE	ITEM
5340-01-065-8967	218	32
5330-01-066-0673	25	2
6220-01-067-4717	60	4
4730-01-071-2859	26	9
5305-01-071-7162	7	15
5935-01-072-3922	104	20
5935-01-072-3924	52	23
5935-01-072-3924	53	27
4730-01-074-0907	252	16
6240-01-074-4600	259	23
2540-01-076-9286	257	28
2920-01-077-0911	47	37
4730-01-079-3275	138	21
5330-01-079-6372	47	44
5305-01-080-4755	47	36
4730-01-081-6467	26	2
4730-01-082-3178	129	2
5940-01-082-3321	52	15
5940-01-082-3321	53	15
4730-01-082-8799	139	4
5306-01-083-5536	64	10
2530-01-084-6975	134	4
4730-01-085-6577	153	14
4730-01-086-2864	143	2
4730-01-086-4064	137	18
4730-01-086-4064	138	12
4730-01-086-4064	139	30
4730-01-086-4064	247	20
4720-01-086-8667	BULK	8
2920-01-087-0997	KITS	
4730-01-088-7502	189	16
5970-01-089-7447	182	24
5970-01-089-7447	182	24
5970-01-089-7447	197	9
5340-01-090-8916	258	34
4730-01-091-2809	137	4
4730-01-091-2809	141	1
4730-01-091-2809	151	4
4730-01-091-2809	152	14
4730-01-091-2809	153	12
4730-01-091-8032	137	5
4730-01-091-8032	149	15
4730-01-091-8032	151	16
4730-01-091-8032	152	11
4730-01-091-8032	153	10
4730-01-091-9212	138	31
4730-01-091-9212	139	28
4730-01-092-0126	126	4
4730-01-092-0126	249	22
4020-01-092-0331	69	22
5935-01-092-1049	225	20
5935-01-093-5199	234	16
4730-01-093-8464	252	45
5935-01-095-1563	88	2
4730-01-095-2034	138	8
2530-01-095-3561	134	3
5310-01-095-4631	5	10
4730-01-095-7717	135	13
4730-01-095-7717	137	6
4730-01-095-7717	144	2
4730-01-095-7717	151	14
4730-01-095-7717	152	2
4730-01-096-3169	138	22
4730-01-096-9127	136	4
4730-01-096-9128	138	32
4730-01-096-9128	141	12
4730-01-096-9128	150	13
4730-01-096-9128	153	15
4730-01-096-9128	268	23
4730-01-096-9138	252	24
5925-01-097-2535	232	10
5310-01-098-0624	12	6
5310-01-098-0624	154	17
2640-01-098-2029	155	33
5310-01-100-2067	64	6
5310-01-100-5199	35	3
5306-01-102-2645	263	3
4730-01-102-4123	138	23
4730-01-102-4123	139	2
4730-01-102-4123	285	8
5935-01-102-7124	72	2
5935-01-103-6064	234	14
5330-01-104-1093	29	26
5330-01-104-1093	160	5
4730-01-106-3975	137	16
5310-01-106-9929	47	24
5935-01-108-4522	71	4
5935-01-108-4522	86	2
6220-01-108-5105	60	20
5310-01-108-8404	221	5
5340-01-109-4609	47	7
5935-01-109-7518	261	5
5310-01-110-7933	67	3
5935-01-111-4580	261	2
5935-01-111-6744	86	6
5935-01-111-6748	259	17
5307-01-111-9509	234	8
5310-01-112-1738	47	49
5310-01-112-1740	47	19
5315-01-113-0395	47	31
4730-01-113-1791	189	17
5935-01-114-5354	78	28
5340-01-114-7712	270	25
5310-01-115-0762	3	11

CROSS REFERENCE INDEXES

NATIONAL STOCK NUMBER INDEX

STOCK NUMBER	FIGURE	ITEM
5310-01-115-0762	36	28
5310-01-115-0762	43	20
5310-01-115-0762	55	2
5310-01-115-0762	57	3
5310-01-115-0762	102	15
5310-01-115-0762	106	2
5310-01-115-0762	153	19
5310-01-115-0762	183	6
5310-01-115-0762	186	14
5310-01-115-0762	189	6
5310-01-115-0762	199	1
5310-01-115-0762	200	4
5310-01-115-0762	241	6
5310-01-115-0762	241	6
5310-01-115-0762	242	9
5310-01-115-0762	254	25
5310-01-115-0762	257	40
5310-01-115-0762	258	7
5310-01-115-0762	263	11
5310-01-115-0762	283	13
4730-01-115-6643	138	17
4730-01-115-6643	139	6
4730-01-115-6643	142	7
4730-01-115-6643	143	4
4730-01-115-7362	153	7
4730-01-119-6895	139	13
4730-01-119-6895	152	16
5310-01-120-6997	47	3
2920-01-121-0168	47	17
5305-01-121-5475	47	9
4720-01-122-9847	BULK	51
5920-01-123-5211	106	8
2815-01-123-5891	288	20
5975-01-123-8811	BULK	83
4720-01-124-0621	BULK	3
5340-01-127-5636	47	12
5340-01-128-9558	35	2
5305-01-129-6705	127	35
3120-01-131-2083	129	14
3120-01-131-2083	129	59
5975-01-131-9492	BULK	87
4720-01-132-7124	BULK	48
4720-01-132-7124	BULK	49
4730-01-133-9017	142	1
4730-01-134-0853	135	19
4730-01-134-0854	150	1
4730-01-134-0856	140	2
4730-01-134-0856	145	5
4730-01-134-1278	138	28
4730-01-134-1278	150	5
4730-01-134-1279	137	15
4730-01-134-1279	139	12
4730-01-134-7759	136	1
4730-01-134-7759	138	14
4730-01-134-7759	143	6
4730-01-134-7759	145	6
5975-01-135-9794	276	22
5325-01-136-4880	46	11
5310-01-136-4888	46	5
5310-01-136-4888	273	15
5325-01-136-7662	46	8
5305-01-140-2490	30	9
5305-01-140-2490	34	11
5305-01-140-2490	38	1
5305-01-140-2490	39	4
5305-01-140-2490	40	10
5305-01-140-2490	69	51
5305-01-140-2490	189	13
5305-01-140-2490	247	2
5340-01-140-6429	266	29
5975-01-144-1912	BULK	86
5325-01-145-0105	196	10
5325-01-145-1179	239	18
5325-01-145-1592	239	54
5325-01-145-1592	239	57
5306-01-145-6949	239	27
2920-01-147-2208	47	41
5310-01-147-5110	22	3
5935-01-148-4523	53	17
5935-01-148-4523	75	2
5340-01-148-6673	21	16
5305-01-149-0867	46	54
5305-01-149-0867	78	33
5305-01-149-0867	149	7
5305-01-149-0867	151	8
5305-01-149-0867	152	17
5305-01-149-0867	172	1
5305-01-149-0867	190	7
5305-01-149-0867	190	7
5305-01-149-0867	196	5
5935-01-149-5165	52	27
5935-01-149-5165	53	31
5935-01-149-5165	71	9
5935-01-149-5165	76	2
5935-01-149-5165	81	4
5935-01-149-5165	86	15
5935-01-149-5165	87	5
5210-01-149-5789	288	13
5306-01-149-6278	257	25
2530-01-149-6787	157	1
5935-01-150-8322	71	12
5935-01-150-8323	71	13
5935-01-150-8323	82	4
5935-01-150-8323	83	4

CROSS REFERENCE INDEXES

NATIONAL STOCK NUMBER INDEX

STOCK NUMBER	FIGURE	ITEM
5935-01-150-8323	85	15
5935-01-150-8323	86	17
5935-01-150-8323	90	2
5999-01-150-8808	52	10
5999-01-150-8808	53	10
5999-01-150-8808	71	10
5999-01-150-8808	73	5
5999-01-150-8808	76	9
5999-01-150-8808	77	10
5999-01-150-8808	81	5
5999-01-150-8808	82	3
5999-01-150-8808	83	3
5999-01-150-8808	84	15
5999-01-150-8808	85	13
5999-01-150-8808	86	16
5999-01-150-8808	87	7
5999-01-150-8808	90	3
5999-01-150-8808	104	10
5935-01-152-2677	52	12
5935-01-152-2677	53	12
5935-01-152-6814	70	11
5935-01-152-6814	245	32
5935-01-153-7519	84	16
5935-01-153-7519	85	11
5935-01-153-8291	73	7
5999-01-153-9432	52	18
5935-01-154-6233	52	9
5935-01-154-6233	53	9
5935-01-154-6233	71	16
5935-01-154-6233	104	8
2530-01-154-7768	47	28
5310-01-155-0057	179	14
5310-01-155-1911	21	10
5310-01-155-1911	26	29
5310-01-155-1911	37	4
5310-01-155-1911	46	50
5310-01-155-1911	78	32
5310-01-155-1911	124	3
5310-01-155-1911	137	2
5310-01-155-1911	139	8
5310-01-155-1911	140	3
5310-01-155-1911	141	7
5310-01-155-1911	142	10
5310-01-155-1911	143	10
5310-01-155-1911	144	4
5310-01-155-1911	145	8
5310-01-155-1911	147	2
5310-01-155-1911	149	3
5310-01-155-1911	154	3
5310-01-155-1911	172	2
5310-01-155-1911	185	14
5310-01-155-1911	190	3
5310-01-155-1911	191	17
5310-01-155-1911	195	9
5310-01-155-1911	196	13
5310-01-155-1911	201	3
5310-01-155-1911	202	4
5310-01-155-1911	203	4
5310-01-155-1911	207	5
5310-01-155-1911	241	19
5310-01-155-1911	242	7
5310-01-155-1911	245	8
5310-01-155-1911	247	4
5310-01-155-1911	252	11
5310-01-155-1911	257	10
5310-01-155-1911	258	17
5310-01-155-1911	263	5
5310-01-155-1911	264	15
5310-01-155-1911	283	11
5310-01-155-5396	159	9
5305-01-155-5439	260	69
5305-01-155-5439	265	44
5935-01-155-7718	77	9
5315-01-156-6314	52	8
5315-01-156-6314	53	8
5315-01-156-6314	71	11
5315-01-156-6314	73	6
5315-01-156-6314	76	3
5315-01-156-6314	77	11
5315-01-156-6314	81	6
5315-01-156-6314	82	2
5315-01-156-6314	83	2
5315-01-156-6314	84	14
5315-01-156-6314	85	12
5315-01-156-6314	86	14
5315-01-156-6314	87	6
5315-01-156-6314	90	4
5315-01-156-6314	104	9
5935-01-156-7789	84	13
5305-01-157-1391	8	18
5305-01-157-1391	8	29
5330-01-157-6233	260	96
5330-01-157-6233	265	38
5305-01-158-0793	78	6
5305-01-158-0793	158	3
5305-01-158-0793	258	5
5305-01-158-0793	260	48
5305-01-158-0793	265	69
5305-01-158-0826	185	11
5305-01-158-0826	189	36
5305-01-158-0826	284	1
5305-01-158-0834	106	5
5305-01-158-2041	66	11
5305-01-158-3206	194	8

CROSS REFERENCE INDEXES

NATIONAL STOCK NUMBER INDEX

STOCK NUMBER	FIGURE	ITEM
5305-01-158-3212	127	98
5310-01-158-9053	178	2
5310-01-158-9053	264	3
4730-01-158-9201	137	13
5310-01-158-9216	47	29
5305-01-159-0065	66	13
5305-01-159-0065	127	16
5340-01-159-9530	KITS	
5935-01-160-0013	71	5
5310-01-160-2032	26	31
5310-01-160-2032	37	3
5310-01-160-2032	46	51
5310-01-160-2032	58	2
5310-01-160-2032	149	22
5310-01-160-2032	185	12
5310-01-160-2032	207	2
5310-01-160-2032	247	11
5310-01-160-2032	252	10
5310-01-160-2032	258	30
5330-01-160-4337	247	35
5310-01-161-2527	237	44
5340-01-161-6344	128	1
5970-01-161-6796	90	7
5310-01-161-7308	245	55
5310-01-161-7311	237	45
5310-01-162-5737	237	47
5305-01-163-1415	127	2
5305-01-163-6473	237	46
5340-01-163-7118	247	29
5310-01-163-9318	44	14
4730-01-164-3365	266	34
5310-01-165-1312	46	12
5310-01-165-1312	273	10
5310-01-165-2482	7	7
5340-01-165-5721	22	5
5305-01-166-0613	26	17
5305-01-166-0613	204	2
5305-01-166-0615	102	14
5305-01-166-0615	148	15
5305-01-166-0615	148	15
5305-01-166-0616	243	1
5305-01-166-0616	244	1
5315-01-166-2355	273	29
5310-01-166-2373	273	22
5310-01-166-3657	237	61
5310-01-167-4064	46	48
5310-01-167-4064	138	29
5310-01-167-4064	140	6
5310-01-167-4064	158	20
5310-01-167-4064	188	25
5310-01-167-4064	189	18
5310-01-167-4064	252	2
5310-01-167-4064	283	3
5305-01-167-8107	141	13
3040-01-167-9212	247	53
4730-01-168-1050	16	17
4730-01-168-1906	264	33
6625-01-169-2437	58	11
5935-01-171-1966	261	3
3810-01-173-4227	274	13
5935-01-174-1235	53	45
4730-01-174-9405	140	9
4730-01-174-9405	151	5
4730-01-174-9405	152	13
5306-01-175-0980	119	10
5935-01-175-8419	225	16
5935-01-176-1708	235	12
4730-01-177-4734	29	22
5999-01-178-4336	52	30
5999-01-178-4336	53	34
5999-01-178-4336	104	3
5935-01-178-7303	260	71
5305-01-178-7349	36	23
5305-01-178-7349	41	36
5305-01-178-7349	42	3
5305-01-178-7349	48	1
5305-01-178-7349	68	3
5305-01-178-7349	69	19
5305-01-178-7349	70	6
5305-01-178-7349	77	12
5305-01-178-7349	78	29
5305-01-178-7349	102	3
5305-01-178-7349	105	1
5305-01-178-7349	106	1
5305-01-178-7349	108	3
5305-01-178-7349	148	1
5305-01-178-7349	161	4
5305-01-178-7349	183	8
5305-01-178-7349	189	7
5305-01-178-7349	189	22
5305-01-178-7349	199	7
5305-01-178-7349	200	14
5305-01-178-7349	247	13
5305-01-178-7349	250	11
5305-01-178-7349	252	50
5305-01-178-7349	257	41
5305-01-178-7349	263	12
5305-01-178-7349	268	28
5305-01-178-7349	283	12
5306-01-179-3346	273	8
5315-01-179-9882	157	4
5365-01-180-2369	129	11
5365-01-180-2369	131	8
5340-01-180-8594	260	24

CROSS REFERENCE INDEXES

NATIONAL STOCK NUMBER INDEX

STOCK NUMBER	FIGURE	ITEM
2530-01-181-3621	130	22
2530-01-181-3621	132	22
5935-01-181-6651	225	21
5306-01-181-7849	31	22
5340-01-182-6728	8	11
5330-01-183-0987	247	82
5305-01-184-1937	52	100
5305-01-184-1937	55	1
5305-01-184-1937	182	20
5305-01-184-1937	185	6
5305-01-184-1937	194	20
5305-01-184-1937	205	6
4730-01-184-6834	252	38
2590-01-185-7949	276	6
5935-01-186-5610	261	6
2520-01-187-3619	47	42
4730-01-187-3645	47	34
5315-01-188-1865	5	17
4730-01-188-3183	149	8
5330-01-189-6351	64	3
5310-01-189-8468	45	11
2910-01-190-4206	35	14
5305-01-190-5705	127	93
5310-01-194-0481	45	10
5325-01-194-3076	45	3
4730-01-194-5339	266	25
5999-01-195-0605	52	22
5999-01-195-0605	53	26
5999-01-195-0605	86	4
5999-01-195-0605	104	17
5999-01-195-0606	52	25
5999-01-195-0606	53	29
5999-01-195-0606	72	5
5330-01-195-1500	45	14
2920-01-196-7730	47	27
5315-01-197-0810	237	10
5310-01-201-9955	277	16
5305-01-202-6841	54	2
9390-01-204-7151	47	43
4820-01-204-8364	255	7
4820-01-204-8364	256	7
5310-01-205-2830	129	61
5310-01-205-2830	131	6
5306-01-205-5360	9	7
5340-01-205-5809	245	23
4730-01-207-5985	28	17
5305-01-207-7512	281	1
4720-01-209-3349	260	84
4720-01-209-3352	240	2
4710-01-209-3454	260	83
4710-01-209-3454	265	59
3020-01-209-4603	276	5
3020-01-209-4606	276	4
4030-01-209-7478	166	3
5940-01-209-8933	260	75
5310-01-210-0199	155	7
6220-01-210-3225	60	18
5305-01-210-4967	276	23
5330-01-211-0717	276	3
4730-01-211-1836	260	85
4730-01-211-1836	265	37
5305-01-211-3097	45	6
5305-01-211-3101	6	1
5935-01-212-7127	260	13
5995-01-212-7561	260	28
5995-01-212-7561	265	7
4730-01-212-9613	41	31
4730-01-212-9613	124	6
4730-01-212-9613	161	10
4730-01-212-9613	257	26
4730-01-212-9613	264	13
4730-01-212-9613	268	12
2940-01-213-1135	285	32
4730-01-213-8473	139	38
4520-01-214-4315	260	79
4520-01-214-4315	265	50
5945-01-217-3325	260	95
5945-01-217-3325	265	40
5920-01-217-8335	260	43
5920-01-217-8335	265	71
2530-01-220-2083	237	52
5365-01-221-0820	239	30
5365-01-221-0821	239	29
2520-01-221-0898	239	45
5930-01-221-7902	260	45
5930-01-221-7902	265	63
2520-01-222-0967	239	41
5935-01-222-2700	52	38
5935-01-222-2700	53	47
5935-01-222-2700	85	2
5935-01-222-2700	104	18
9505-01-222-7564	239	46
5315-01-223-1159	237	22
5306-01-223-4345	273	43
5310-01-223-7136	237	29
5315-01-224-1537	279	5
5365-01-224-2304	237	28
5365-01-224-2305	237	24
5310-01-225-3870	219	18
3120-01-225-3950	219	25
5360-01-225-9676	237	18
4720-01-226-3714	BULK	1
5975-01-226-8078	87	14
5315-01-227-4226	249	3

CROSS REFERENCE INDEXES

NATIONAL STOCK NUMBER INDEX

STOCK NUMBER	FIGURE	ITEM
3110-01-228-7663	237	19
6145-01-229-4134	BULK	12
5305-01-230-1659	239	21
5935-01-231-5250	260	70
5310-01-231-5759	279	8
5305-01-231-7406	189	28
5310-01-232-1361	273	25
5310-01-232-1362	46	25
5310-01-232-1362	273	44
5310-01-232-1363	46	39
4730-01-234-4802	139	29
4730-01-234-4802	268	10
5310-01-235-2057	281	6
5310-01-239-7188	30	5
5310-01-239-7188	248	6
5310-01-240-1604	220	8
6145-01-241-0961	259	19
2990-01-244-6235	260	29
2590-01-244-6239	260	34
2510-01-244-6240	260	56
4210-01-244-6241	265	32
2990-01-244-6242	260	74
2990-01-244-6242	265	48
2540-01-244-6244	260	73
2540-01-244-6244	265	47
4810-01-244-6245	265	57
5305-01-244-6246	260	52
5305-01-244-6246	265	66
5365-01-244-6364	260	21
5330-01-244-6373	260	86
5330-01-244-6373	265	60
5330-01-244-6374	260	90
5330-01-244-6374	265	61
5330-01-244-6375	260	20
5330-01-244-6375	265	36
5325-01-244-6382	260	60
5305-01-244-6386	260	44
5305-01-244-6386	265	75
2520-01-244-6394	260	58
5935-01-244-6425	260	49
4330-01-244-6435	265	58
2910-01-244-6436	260	89
4730-01-245-6925	137	19
4730-01-245-6925	138	38
4730-01-245-6925	139	18
4730-01-245-6925	152	12
5310-01-246-1387	176	4
5310-01-246-1387	185	17
5305-01-246-2383	260	82
5305-01-246-2383	265	51
5365-01-246-2870	248	8
2530-01-246-4400	45	23
5305-01-250-9209	194	10
5305-01-251-1626	113	2
5305-01-251-1626	117	2
5305-01-251-1626	120	17
5305-01-251-1626	125	3
2530-01-251-5296	237	51
4030-01-255-2753	237	67
7690-01-256-4909	246	3
5330-01-257-1709	BULK	74
5310-01-259-6358	277	20
5305-01-259-8683	252	30
5305-01-263-6154	127	3
5306-01-264-6360	3	15
5306-01-264-6360	257	22
5306-01-266-7779	21	15
5306-01-266-7779	26	28
5306-01-266-7779	112	2
5306-01-266-7779	124	4
5306-01-266-7779	137	7
5306-01-266-7779	139	10
5306-01-266-7779	141	8
5306-01-266-7779	142	5
5306-01-266-7779	143	5
5306-01-266-7779	144	3
5306-01-266-7779	145	7
5306-01-266-7779	147	8
5306-01-266-7779	149	6
5306-01-266-7779	181	2
5306-01-266-7779	181	42
5306-01-266-7779	196	7
5306-01-266-7779	242	11
5306-01-266-7779	247	3
5306-01-266-7779	249	2
5306-01-266-7779	283	10
5330-01-267-9017	237	25
5330-01-268-0914	237	27
2520-01-268-1051	255	8
2520-01-268-1051	256	8
5305-01-268-3656	26	48
5305-01-268-3656	36	7
5305-01-268-3656	36	22
5305-01-268-3656	57	4
5305-01-268-3656	78	16
5305-01-268-3656	106	3
5305-01-268-3656	153	6
5305-01-268-3656	158	16
5305-01-268-3656	182	29
5305-01-268-3656	202	7
5305-01-268-3656	205	19
5305-01-268-3656	241	3
5305-01-268-3656	245	5
5305-01-268-3656	258	6

CROSS REFERENCE INDEXES

NATIONAL STOCK NUMBER INDEX

STOCK NUMBER	FIGURE	ITEM
5305-01-268-3656	272	30
5305-01-268-9099	119	16
5305-01-268-9100	102	18
5305-01-268-9100	148	22
5340-01-269-1361	36	16
5330-01-269-6079	237	49
5306-01-270-4217	36	34
5306-01-270-4217	69	53
5306-01-270-4217	119	15
5306-01-270-4217	264	47
5340-01-270-8588	70	5
5340-01-270-8588	78	11
5340-01-270-8588	102	1
5925-01-271-0695	232	8
5310-01-271-5758	155	35
2530-01-271-7006	133	14
2530-01-271-7006	134	18
2530-01-271-7084	133	2
2530-01-271-7084	134	2
5330-01-271-9347	133	4
5330-01-271-9347	134	8
5920-01-273-5455	88	12
5305-01-273-6251	158	22
5305-01-273-6251	202	8
5305-01-273-6251	203	3
5305-01-273-6251	245	9
5305-01-273-6251	258	16
5305-01-274-1264	38	4
5305-01-274-1264	172	36
5305-01-274-1264	189	45
5305-01-274-1264	285	12
4730-01-274-1825	135	14
4730-01-274-1825	138	33
4730-01-274-1825	141	14
4730-01-274-1825	151	9
4730-01-274-1825	152	8
4730-01-274-1825	153	17
4730-01-274-1825	268	13
5310-01-274-3255	52	65
5310-01-274-3255	53	79
5310-01-274-3255	209	7
5360-01-279-2215	247	36
5930-01-279-4428	227	3
5360-01-280-7446	29	28
5306-01-281-0554	122	13
5306-01-281-0554	122	18
5315-01-283-0544	218	16
5310-01-283-1104	215	17
4730-01-283-1876	141	11
4730-01-283-1876	151	15
4730-01-283-1877	268	4
4730-01-283-8150	139	20
4730-01-283-8150	268	8
4460-01-284-2344	155	21
4820-01-284-5435	16	13
4820-01-284-5435	20	2
5310-01-285-4017	260	55
5310-01-285-4017	265	45
5310-01-288-1429	272	8
5325-01-288-7881	259	15
5120-01-289-6531	288	10
5120-01-290-1619	245	29
5120-01-291-3566	288	9
5340-01-292-5552	133	19
5340-01-292-5552	134	21
5920-01-292-6688	88	11
5930-01-292-6730	50	5
5930-01-292-6730	51	6
5930-01-292-6730	78	26
5330-01-292-9573	133	11
5330-01-292-9573	134	13
6220-01-293-2627	60	8
5310-01-293-2835	274	18
5935-01-293-5988	52	34
5935-01-293-5988	53	38
5935-01-293-5988	104	6
3020-01-294-8805	277	5
5330-01-295-0115	83	9
5330-01-295-3053	245	15
5330-01-296-2109	245	14
5305-01-296-2849	219	23
5305-01-296-2849	225	36
5305-01-296-2849	229	7
5310-01-297-1064	49	3
2815-01-298-5347	22	2
4820-01-298-8416	252	43
5305-01-299-4602	3	10
5305-01-299-4602	43	16
5305-01-299-4602	58	10
5305-01-299-4602	69	33
5305-01-299-4602	70	10
5305-01-299-4602	73	1
5305-01-299-4602	77	1
5305-01-299-4602	148	12
5305-01-299-4602	148	12
5305-01-299-4602	199	8
5305-01-299-4602	200	5
5305-01-299-4602	264	10
3110-01-299-8150	247	38
5360-01-300-1187	247	67
5360-01-300-1188	247	56
5360-01-300-1191	247	50
5330-01-300-1216	247	60
4730-01-300-9031	138	19

CROSS REFERENCE INDEXES

NATIONAL STOCK NUMBER INDEX

STOCK NUMBER	FIGURE	ITEM
4320-01-301-8091	247	52
5320-01-301-8429	247	57
5305-01-302-2424	215	4
3110-01-302-9300	47	40
3120-01-302-9301	47	39
5310-01-304-8733	221	3
5330-01-305-6550	47	51
5315-01-305-7675	218	34
3120-01-306-3577	276	8
5305-01-307-4391	260	35
5970-01-308-0374	47	6
5310-01-308-8205	256	29
5310-01-310-1098	281	19
5310-01-312-4960	270	19
5310-01-314-6722	259	14
5340-01-315-7223	69	23
6150-01-317-5853	69	20
5935-01-319-2334	86	21
6220-01-319-5509	60	17
6220-01-319-5509	65	8
3120-01-322-0469	276	13
5935-01-323-6812	52	29
5935-01-323-6812	53	33
5935-01-323-6814	266	59
5935-01-323-6818	52	45
5935-01-323-6818	53	55
5935-01-323-8568	52	35
5935-01-323-8568	53	39
5935-01-323-8568	104	4
5935-01-323-8570	52	32
5935-01-323-8570	53	36
5935-01-324-0563	52	40
5935-01-324-0563	53	49
5935-01-324-2350	266	57
5310-01-325-7280	130	2
5310-01-325-7280	130	17
5310-01-325-7280	132	2
5310-01-325-7280	132	17
5305-01-325-8388	255	12
5305-01-325-8388	256	16
5305-01-325-8388	277	15
5340-01-326-2085	220	13
6695-01-326-4706	60	19
6695-01-326-4706	65	10
5306-01-326-4911	268	20
5999-01-327-6598	52	39
5999-01-327-6598	53	48
5999-01-327-6598	71	3
5999-01-327-6598	85	3
5999-01-327-6598	86	3
5999-01-327-6598	104	19
5305-01-329-7038	109	4
5330-01-329-9093	8	21
4730-01-329-9147	28	3
4730-01-329-9151	28	6
4730-01-329-9151	257	14
2530-01-330-5049	133	10
2530-01-330-5049	134	12
5305-01-330-7575	127	84
5306-01-330-8490	2	13
5306-01-330-8490	28	8
5306-01-330-8490	168	8
5306-01-330-8490	204	1
5306-01-330-8490	249	13
5306-01-330-8490	272	3
5305-01-330-8496	45	27
2930-01-331-6660	45	5
5330-01-331-9283	45	16
5325-01-331-9372	45	22
5365-01-331-9503	45	18
5340-01-331-9610	45	24
5305-01-332-0106	245	24
2520-01-332-1326	137	3
2530-01-332-1583	143	7
3040-01-332-5830	45	21
2930-01-332-9887	45	12
5310-01-333-3561	130	27
5310-01-333-3561	132	27
5330-01-333-6444	16	7
5330-01-333-6444	17	8
5330-01-333-6444	29	12
5330-01-333-6444	31	4
5330-01-333-6444	33	3
5330-01-333-6444	43	7
6150-01-333-9318	47	5
4730-01-334-5710	29	33
5305-01-334-6785	52	66
5305-01-334-6785	53	80
5305-01-334-9657	140	11
5330-01-335-0042	29	30
5120-01-335-1023	288	22
4730-01-336-3316	249	11
4730-01-336-3316	250	15
5935-01-336-6408	52	46
5330-01-336-8776	31	18
2540-01-337-4105	149	11
4440-01-337-7324	KITS	
5306-01-338-3981	113	15
5306-01-338-3981	117	17
5310-01-339-3991	260	5
5325-01-340-1286	245	2
5306-01-340-2695	260	4
5999-01-340-7698	52	26
5999-01-340-7698	53	30

CROSS REFERENCE INDEXES

NATIONAL STOCK NUMBER INDEX

STOCK NUMBER	FIGURE	ITEM
5999-01-340-7698	71	6
5999-01-340-7698	84	3
5999-01-340-7698	87	3
5999-01-340-7698	88	3
5305-01-341-8926	46	49
5305-01-341-8926	68	5
5305-01-341-8926	149	4
5305-01-341-8926	152	5
5305-01-341-8926	154	4
5305-01-341-8926	180	4
5305-01-341-8926	196	1
5305-01-341-8926	201	4
5305-01-341-8926	202	3
5305-01-341-8926	247	10
5305-01-341-8926	252	14
5305-01-341-8926	257	18
5305-01-341-8926	283	8
5310-01-342-2739	3	13
5310-01-342-2739	42	5
5310-01-342-2739	43	21
5310-01-342-2739	48	4
5310-01-342-2739	69	17
5310-01-342-2739	69	42
5310-01-342-2739	70	9
5310-01-342-2739	73	3
5310-01-342-2739	77	3
5310-01-342-2739	102	2
5310-01-342-2739	148	4
5310-01-342-2739	158	14
5310-01-342-2739	190	6
5310-01-342-2739	241	7
5330-01-343-2745	249	28
5330-01-343-2745	249	30
5340-01-343-6678	16	10
5340-01-343-6678	20	5
5315-01-343-7322	238	15
6220-01-343-7564	65	3
5330-01-344-2572	KITS	
5330-01-344-2573	KITS	
5305-01-344-3859	237	43
5365-01-344-6854	217	9
5365-01-344-6855	217	12
5930-01-344-7571	51	17
2520-01-344-9376	237	13
2530-01-345-0815	237	26
5305-01-345-1702	237	38
5360-01-345-5384	237	15
6210-01-345-6315	50	30
6210-01-345-6315	50	46
6210-01-345-6315	51	14
6210-01-345-6315	51	18
6210-01-345-6315	51	22
6210-01-345-6315	257	57
2520-01-346-0053	237	23
5306-01-346-5613	237	16
5330-01-347-3206	43	4
5330-01-347-3207	43	8
5305-01-347-5242	237	39
4730-01-347-7342	41	3
5330-01-348-2720	25	3
3110-01-348-4867	46	23
3110-01-348-4867	273	32
4730-01-348-6542	138	13
5315-01-348-6880	46	18
5310-01-348-8314	273	27
5310-01-348-8360	46	2
5310-01-348-8384	46	3
5310-01-348-8385	46	37
5310-01-348-8385	273	20
5310-01-348-8392	273	26
5310-01-348-8393	46	32
5310-01-348-8398	46	34
5310-01-348-8398	273	39
5305-01-348-8922	202	17
5305-01-348-8922	203	15
6115-01-349-5320	273	40
5325-01-350-0114	233	15
5310-01-350-4257	46	43
5310-01-350-4257	273	34
5330-01-350-4472	249	34
5330-01-350-4474	249	36
3120-01-350-6845	5	1
4710-01-350-7835	265	35
5310-01-350-8549	46	44
5310-01-350-8549	273	35
4730-01-351-1567	139	24
5935-01-351-1892	52	2
5935-01-351-1892	53	2
5935-01-351-1892	104	16
5935-01-351-4732	52	4
5935-01-351-4732	53	4
5935-01-351-4732	104	13
5310-01-352-2753	3	2
5310-01-352-2753	12	12
5310-01-352-9593	216	4
5120-01-353-1576	288	4
5940-01-353-6476	52	3
5940-01-353-6476	53	3
5940-01-353-6476	104	12
6220-01-354-1221	65	17
6220-01-354-5261	65	9
6220-01-355-0001	50	34
6220-01-355-0001	50	38
6220-01-355-0001	50	42

CROSS REFERENCE INDEXES

NATIONAL STOCK NUMBER INDEX

STOCK NUMBER	FIGURE	ITEM	STOCK NUMBER	FIGURE	ITEM
6220-01-355-0001	50	50	5340-01-359-8852	122	67
6220-01-355-0001	51	10	5340-01-359-8853	122	68
6220-01-355-0001	257	54	5340-01-359-8854	122	84
5640-01-356-1684	245	18	5310-01-359-9328	14	6
5180-01-356-8155	288	1	5310-01-359-9329	14	3
2610-01-356-9098	156	1	5365-01-359-9336	122	96
5305-01-356-9468	60	2	5365-01-359-9336	122	98
5305-01-356-9468	263	7	5365-01-359-9336	127	31
5325-01-357-0699	231	18	5325-01-359-9359	114	2
5330-01-357-0846	237	30	5325-01-359-9359	115	3
2520-01-357-1585	129	1	5325-01-359-9360	114	6
5305-01-357-1656	133	16	5325-01-359-9360	115	9
5305-01-357-1656	134	22	5325-01-359-9360	116	3
5330-01-359-2151	237	40	5325-01-359-9361	115	8
4820-01-359-6361	141	4	5325-01-359-9362	118	3
5360-01-359-7943	15	3	5365-01-359-9366	118	6
5360-01-359-7944	122	7	5305-01-359-9390	109	17
5360-01-359-7944	122	30	5365-01-359-9402	113	9
5360-01-359-7944	122	51	5365-01-359-9403	116	1
5360-01-359-7944	127	90	5365-01-359-9404	116	1
5360-01-359-7945	122	42	5365-01-359-9408	122	54
5360-01-359-7946	122	60	5340-01-359-9416	122	78
5360-01-359-7947	122	63	5306-01-359-9429	122	2
5360-01-359-7948	122	66	5305-01-359-9445	119	9
5360-01-359-7949	122	69	5320-01-360-0925	120	4
5360-01-359-7950	122	77	5306-01-360-0927	8	10
5360-01-359-7951	122	80	5306-01-360-0927	12	23
5360-01-359-7952	122	83	5306-01-360-0928	12	11
5360-01-359-7953	122	85	5306-01-360-0929	12	10
5360-01-359-7954	127	7	5306-01-360-0929	20	7
5305-01-359-7999	122	27	5306-01-360-0929	44	12
5305-01-359-8003	122	52	5306-01-360-0930	12	31
5305-01-359-8004	122	97	5306-01-360-0931	12	9
5305-01-359-8004	123	1	5306-01-360-0932	7	8
5310-01-359-8760	109	7	5365-01-360-0937	122	93
5310-01-359-8789	127	67	5365-01-360-0937	127	101
5310-01-359-8806	8	9	5305-01-360-0952	8	6
5310-01-359-8806	12	22	5325-01-360-0953	24	6
5310-01-359-8806	27	13	5325-01-360-0954	24	5
5310-01-359-8806	29	17	5325-01-360-0955	14	8
5310-01-359-8807	10	8	5325-01-360-0956	9	11
5310-01-359-8808	154	15	5325-01-360-0958	109	22
5340-01-359-8809	120	20	5325-01-360-0959	127	79
5310-01-359-8811	116	4	5325-01-360-0960	127	66
5340-01-359-8825	122	17	5325-01-360-0961	127	112
5310-01-359-8839	109	12	5325-01-360-0962	121	10
5310-01-359-8840	109	18	5325-01-360-0963	121	16
5310-01-359-8842	127	40	5325-01-360-0964	121	22
5310-01-359-8843	127	54	5325-01-360-0965	119	1
5340-01-359-8849	122	41	5365-01-360-0974	12	28
5340-01-359-8850	122	61	5365-01-360-0975	12	18
5340-01-359-8851	122	62	5310-01-360-0979	106	6

CROSS REFERENCE INDEXES

NATIONAL STOCK NUMBER INDEX

STOCK NUMBER	FIGURE	ITEM	STOCK NUMBER	FIGURE	ITEM
5340-01-360-0982	119	11	5365-01-360-1038	116	1
5310-01-360-0983	17	2	5365-01-360-1039	116	1
5310-01-360-0983	18	7	5365-01-360-1040	116	1
5307-01-360-0988	24	3	5365-01-360-1041	116	1
5305-01-360-0990	12	24	5340-01-360-1044	123	2
5305-01-360-0990	25	5	5340-01-360-1045	109	2
5305-01-360-0999	7	3	5340-01-360-1046	127	41
5305-01-360-1000	12	1	5340-01-360-1047	127	99
5305-01-360-1000	23	13	5340-01-360-1048	117	16
5305-01-360-1000	27	7	5310-01-360-1064	109	10
5305-01-360-1001	7	9	5310-01-360-1065	109	24
5305-01-360-1001	12	7	5340-01-360-1066	36	25
5305-01-360-1001	154	18	5340-01-360-1075	122	79
5305-01-360-1002	12	3	5340-01-360-1076	122	87
5305-01-360-1003	24	4	5340-01-360-1077	127	8
5305-01-360-1005	23	1	5340-01-360-1078	127	97
5305-01-360-1006	16	1	5305-01-360-1136	120	2
5305-01-360-1006	23	8	5305-01-360-1137	113	1
5305-01-360-1006	31	13	5340-01-360-1210	12	2
5305-01-360-1006	33	8	5340-01-360-1220	12	21
5305-01-360-1007	15	6	5340-01-360-1221	12	15
5305-01-360-1007	23	6	5306-01-360-1632	5	7
5305-01-360-1008	16	15	5306-01-360-1633	5	11
5305-01-360-1008	23	15	5306-01-360-1634	3	1
5305-01-360-1009	5	14	5305-01-360-1667	127	106
5305-01-360-1009	11	1	5325-01-360-1669	109	1
5305-01-360-1009	18	2	5325-01-360-1670	127	71
5305-01-360-1009	21	2	5325-01-360-1671	127	77
5305-01-360-1009	27	10	5325-01-360-1672	127	78
5305-01-360-1009	43	2	5325-01-360-1673	127	53
5305-01-360-1010	15	7	5325-01-360-1674	127	48
5305-01-360-1011	8	7	5325-01-360-1675	127	47
5305-01-360-1011	29	6	5340-01-360-1691	8	4
5365-01-360-1017	109	5	5340-01-360-1691	12	32
5365-01-360-1018	109	5	5305-01-360-1696	32	1
5365-01-360-1019	109	5	5340-01-360-1701	3	16
5365-01-360-1020	109	5	5305-01-360-1703	27	12
5365-01-360-1021	109	5	5305-01-360-1703	29	18
5365-01-360-1022	109	5	5305-01-360-1704	29	32
5365-01-360-1023	109	30	5305-01-360-1706	33	6
5365-01-360-1024	109	30	5305-01-360-1707	44	15
5365-01-360-1025	127	12	5305-01-360-1708	44	8
5365-01-360-1026	127	39	5365-01-360-1715	109	30
5365-01-360-1027	127	38	5365-01-360-1716	127	37
5365-01-360-1028	127	61	5365-01-360-1717	127	10
5365-01-360-1029	127	60	5365-01-360-1718	127	11
5365-01-360-1030	127	59	5365-01-360-1721	109	5
5340-01-360-1033	66	10	5340-01-360-1725	31	19
5365-01-360-1034	4	1	5365-01-360-1731	127	52
5365-01-360-1035	10	5	5365-01-360-1732	127	49
5365-01-360-1036	127	58	5340-01-360-1750	3	3
5365-01-360-1037	116	1	2835-01-360-1757	109	14

CROSS REFERENCE INDEXES

NATIONAL STOCK NUMBER INDEX

STOCK NUMBER	FIGURE	ITEM	STOCK NUMBER	FIGURE	ITEM
5340-01-360-1793	15	8	4730-01-360-4179	27	2
5340-01-360-1885	12	17	4730-01-360-4197	29	19
5340-01-360-1885	31	15	4730-01-360-4242	12	34
5120-01-360-1918	287	3	4820-01-360-4312	127	6
5306-01-360-1939	36	24	4810-01-360-4314	122	11
5306-01-360-1940	288	15	4810-01-360-4314	122	31
5306-01-360-1941	288	16	4810-01-360-4314	122	50
5360-01-360-1951	127	96	4810-01-360-4314	127	89
5306-01-360-1969	288	28	4820-01-360-4399	15	14
5306-01-360-1970	109	33	4820-01-360-4400	15	15
5325-01-360-1973	117	11	4730-01-360-4404	127	17
5305-01-360-1989	4	3	4820-01-360-4408	122	86
5305-01-360-1990	10	1	4810-01-360-4433	122	44
5305-01-360-1991	10	9	3010-01-360-4442	115	6
5305-01-360-1992	22	4	3040-01-360-4443	119	7
5305-01-360-1993	20	8	2530-01-360-4446	141	2
5305-01-360-1994	18	6	3040-01-360-4449	117	6
5305-01-360-1995	17	3	2815-01-360-4450	12	26
5305-01-360-1996	8	5	4730-01-360-4455	119	13
5305-01-360-1997	43	11	4730-01-360-4458	122	15
5365-01-360-1998	8	15	2815-01-360-4711	14	9
5365-01-360-1998	8	16	5315-01-360-4771	122	46
5365-01-360-2007	8	17	5315-01-360-4772	122	74
5360-01-360-2023	109	26	4930-01-360-5002	122	28
5306-01-360-2033	119	17	5935-01-360-5011	127	15
5305-01-360-2038	8	20	5945-01-360-5012	49	1
5305-01-360-2038	8	32	5945-01-360-5068	106	10
4810-01-360-2353	239	24	5945-01-360-5161	122	32
4820-01-360-2354	122	43	5945-01-360-5161	122	47
4820-01-360-2355	122	59	5945-01-360-5162	122	35
4730-01-360-2372	31	17	5945-01-360-5163	122	22
4820-01-360-2394	29	27	5945-01-360-5163	122	71
4820-01-360-2395	29	29	5330-01-360-5252	129	55
4810-01-360-2415	15	2	5330-01-360-5252	131	42
4820-01-360-2421	122	39	5330-01-360-5253	129	12
2815-01-360-2429	12	14	5330-01-360-5253	129	57
2815-01-360-2467	23	3	5330-01-360-5262	119	8
4730-01-360-2485	127	103	3120-01-360-5285	10	3
5945-01-360-2771	122	8	3120-01-360-5286	10	6
5945-01-360-2771	127	86	3120-01-360-5287	9	6
5945-01-360-2773	106	9	3120-01-360-5288	9	9
5305-01-360-2854	120	21	3120-01-360-5289	9	9
5305-01-360-2981	112	5	3120-01-360-5290	9	9
5945-01-360-3099	52	77	3120-01-360-5291	6	3
5945-01-360-3099	53	92	3120-01-360-5293	6	2
2940-01-360-3389	122	14	3120-01-360-5294	6	1
5935-01-360-3994	87	13	3120-01-360-5295	6	1
5210-01-360-4104	288	12	3120-01-360-5296	6	1
4730-01-360-4145	127	18	3120-01-360-5297	6	1
4730-01-360-4146	16	6	3120-01-360-5299	6	2
4730-01-360-4146	29	13	3120-01-360-5300	6	2
4730-01-360-4160	17	7	5330-01-360-5329	106	7

CROSS REFERENCE INDEXES

NATIONAL STOCK NUMBER INDEX

STOCK NUMBER	FIGURE	ITEM	STOCK NUMBER	FIGURE	ITEM
5330-01-360-5459	121	5	5330-01-360-6018	121	2
2815-01-360-5479	4	8	3040-01-360-6019	120	14
2815-01-360-5538	15	11	5945-01-360-6118	52	80
5315-01-360-5913	113	8	5945-01-360-6118	53	95
5315-01-360-5914	122	92	4820-01-360-6152	138	25
5315-01-360-5915	127	21	4820-01-360-6152	144	5
5315-01-360-5916	127	92	4820-01-360-6152	151	7
5330-01-360-5917	117	4	4820-01-360-6152	152	4
5330-01-360-5927	12	20	4820-01-360-6160	122	64
5330-01-360-5928	12	19	4820-01-360-6161	122	81
5330-01-360-5929	12	8	4820-01-360-6162	122	82
5330-01-360-5930	154	13	2530-01-360-6198	139	5
5330-01-360-5932	23	11	4730-01-360-6216	125	8
5330-01-360-5933	23	9	4730-01-360-6224	125	5
5330-01-360-5934	23	10	4720-01-360-6226	125	6
5330-01-360-5935	27	4	3040-01-360-6280	12	27
5330-01-360-5936	21	4	3040-01-360-6284	118	8
5330-01-360-5937	16	8	2520-01-360-6310	121	6
5330-01-360-5938	16	19	2520-01-360-6311	8	19
5330-01-360-5940	27	1	2520-01-360-6312	120	3
5330-01-360-5941	33	1	2910-01-360-6314	288	3
5330-01-360-5942	31	31	2520-01-360-6317	120	7
2530-01-360-5954	129	39	2520-01-360-6318	120	16
2530-01-360-5954	131	26	2520-01-360-6319	121	24
3120-01-360-5956	6	2	2520-01-360-6321	127	94
3120-01-360-5957	6	2	2520-01-360-6324	120	5
5330-01-360-5976	KITS		2520-01-360-6325	121	14
5330-01-360-5978	127	80	2520-01-360-6326	121	18
5330-01-360-5979	127	81	2805-01-360-6327	109	23
5330-01-360-5980	127	43	2520-01-360-6328	120	11
5935-01-360-5982	127	13	3010-01-360-6338	114	9
5340-01-360-5983	122	57	2815-01-360-6339	11	3
5340-01-360-5984	122	58	3040-01-360-6345	120	13
5330-01-360-5987	KITS		3040-01-360-6346	113	4
5330-01-360-5988	KITS		3040-01-360-6347	127	19
5330-01-360-6006	122	12	3040-01-360-6348	127	82
5330-01-360-6012	25	4	3040-01-360-6349	127	63
5330-01-360-6013	122	10	3040-01-360-6350	127	44
5330-01-360-6013	122	33	3040-01-360-6351	127	33
5330-01-360-6013	122	49	2815-01-360-6352	12	25
5330-01-360-6013	127	88	2520-01-360-6353	109	13
5330-01-360-6014	122	9	2910-01-360-6366	34	5
5330-01-360-6014	122	34	3020-01-360-6384	115	4
5330-01-360-6014	122	48	3020-01-360-6386	114	4
5330-01-360-6014	127	87	3020-01-360-6389	11	5
5330-01-360-6015	122	23	3020-01-360-6390	6	6
5330-01-360-6015	122	36	3020-01-360-6391	154	14
5330-01-360-6015	122	73	2520-01-360-6499	121	25
5330-01-360-6016	122	37	3040-01-360-6523	116	5
5330-01-360-6017	66	9	3040-01-360-6524	114	8
5330-01-360-6017	122	24	3040-01-360-6525	115	10
5330-01-360-6017	122	72	2815-01-360-6535	9	5

CROSS REFERENCE INDEXES

NATIONAL STOCK NUMBER INDEX

STOCK NUMBER	FIGURE	ITEM
3020-01-360-6543	7	4
5315-01-360-6728	5	16
5315-01-360-6729	122	6
5315-01-360-6729	122	38
5315-01-360-6729	122	45
5315-01-360-7167	127	9
5330-01-360-7172	4	9
5330-01-360-7173	18	4
3110-01-360-7490	113	10
3110-01-360-7491	115	13
3110-01-360-7492	109	29
3110-01-360-7494	127	25
3110-01-360-7495	127	28
3110-01-360-7496	127	56
3110-01-360-7497	127	24
3110-01-360-7498	127	27
3110-01-360-7499	127	57
3110-01-360-7500	127	45
3110-01-360-7501	109	27
3110-01-360-7503	113	12
3110-01-360-7504	114	11
5330-01-360-7516	113	11
5330-01-360-7516	117	8
5330-01-360-7518	127	69
5330-01-360-7519	127	36
5330-01-360-7520	117	15
5330-01-360-7521	119	6
3120-01-360-7529	11	6
3120-01-360-7531	117	5
3120-01-360-7532	113	6
3120-01-360-7533	115	7
3120-01-360-7534	109	11
3120-01-360-7535	127	83
3120-01-360-7536	127	46
3120-01-360-7540	114	3
3120-01-360-7540	121	9
3120-01-360-7541	114	10
3120-01-360-7542	115	11
3120-01-360-7543	109	21
3120-01-360-7543	118	4
3120-01-360-7544	118	1
3120-01-360-7545	109	34
3130-01-360-7564	5	9
3110-01-360-7565	114	7
3130-01-360-7571	127	68
5330-01-360-7724	123	4
5330-01-360-7725	123	5
3110-01-360-7743	117	9
3110-01-360-7744	127	34
3110-01-360-7745	127	107
4730-01-360-7750	44	7
5330-01-360-7753	129	38
5330-01-360-7753	131	25
3120-01-360-7777	116	9
3120-01-360-7778	121	4
3120-01-360-7779	121	7
3120-01-360-7780	121	32
3120-01-360-7781	116	7
3120-01-360-7783	127	110
3120-01-360-7784	116	8
5340-01-360-7812	122	56
2540-01-360-7822	201	19
2540-01-360-7822	202	18
2540-01-360-7822	203	21
5330-01-360-7826	112	6
5330-01-360-7826	124	9
5330-01-360-7852	125	4
3020-01-360-7953	115	12
4320-01-360-7954	125	2
4820-01-360-7964	122	75
4320-01-360-7970	113	14
2815-01-360-7980	12	13
2940-01-360-7986	122	5
2940-01-360-7986	127	91
3020-01-360-7989	118	5
3020-01-360-7990	118	7
3020-01-360-7991	127	26
3020-01-360-7992	127	72
3040-01-360-8040	117	12
3040-01-360-8040	117	12
2540-01-360-8046	202	9
2540-01-360-8047	203	5
2520-01-360-8091	121	15
2510-01-360-8092	121	19
4910-01-360-8093	288	17
5330-01-360-9023	6	7
5330-01-360-9034	122	16
5330-01-360-9035	122	88
5330-01-360-9036	127	23
5330-01-360-9037	127	14
5330-01-360-9038	127	100
5330-01-360-9039	127	62
5305-01-360-9088	4	2
4820-01-360-9095	122	70
4820-01-360-9096	127	95
5330-01-360-9098	KITS	
5330-01-360-9099	121	11
5330-01-360-9100	121	12
5330-01-360-9101	121	13
5330-01-360-9102	117	7
5330-01-360-9102	121	17
5330-01-360-9103	121	21
5330-01-360-9104	119	4
5330-01-360-9105	119	5

CROSS REFERENCE INDEXES

NATIONAL STOCK NUMBER INDEX

STOCK NUMBER	FIGURE	ITEM	STOCK NUMBER	FIGURE	ITEM
4730-01-360-9109	29	4	2815-01-361-2293	9	10
2530-01-360-9193	142	4	3040-01-361-2338	121	3
4730-01-360-9206	29	10	3040-01-361-2338	121	3
4320-01-360-9221	17	1	2530-01-361-2346	KITS	
2520-01-360-9265	121	28	2530-01-361-2346	KITS	
4320-01-360-9332	109	19	2815-01-361-2366	8	1
5330-01-361-0235	122	94	2910-01-361-2368	25	1
5330-01-361-0235	127	102	2590-01-361-2371	109	9
5330-01-361-0274	117	14	2990-01-361-2372	23	16
4720-01-361-0505	29	2	2815-01-361-2394	14	2
2520-01-361-0567	127	51	2940-01-361-2405	125	7
2520-01-361-0568	127	50	2940-01-361-2407	26	16
3040-01-361-0570	127	108	3020-01-361-2409	10	2
3040-01-361-0572	127	55	3020-01-361-2410	10	7
3040-01-361-0573	127	114	3020-01-361-2411	127	111
3020-01-361-0576	114	12	2930-01-361-2491	43	12
2520-01-361-0592	117	13	3040-01-361-2502	14	11
4820-01-361-0593	122	76	3040-01-361-2504	113	13
2520-01-361-0596	120	15	3040-01-361-2505	10	4
2520-01-361-0597	121	29	3040-01-361-2508	7	2
2520-01-361-0600	120	12	3040-01-361-2509	11	2
2520-01-361-0601	121	20	2520-01-361-2516	131	1
2520-01-361-0602	119	3	4710-01-361-2530	27	5
2520-01-361-0603	119	2	4710-01-361-2531	16	4
2520-01-361-0608	120	18	4710-01-361-2532	21	6
3040-01-361-0615	12	5	4710-01-361-2533	29	23
2940-01-361-0628	123	6	4710-01-361-2534	29	11
3020-01-361-0636	120	6	4720-01-361-2539	22	6
2520-01-361-0743	127	74	2815-01-361-2838	9	12
2520-01-361-0744	127	76	4910-01-361-2839	288	21
2520-01-361-0745	121	30	4910-01-361-2840	288	14
3040-01-361-0755	121	26	3120-01-361-3151	6	3
3040-01-361-0756	121	27	2950-01-361-3182	27	3
3040-01-361-0758	36	32	9905-01-361-3389	120	22
3040-01-361-0760	8	12	2815-01-361-3931	9	2
4710-01-361-0816	21	3	2520-01-361-3945	120	8
4710-01-361-0817	5	15	3020-01-361-3953	127	30
2520-01-361-1090	109	16	3020-01-361-3955	127	113
2520-01-361-1090	109	16	3020-01-361-3956	127	29
2520-01-361-1091	105	6	3020-01-361-3957	121	8
3120-01-361-1157	6	3	2530-01-361-3966	133	3
3120-01-361-1158	6	3	2520-01-361-3969	127	75
3120-01-361-1159	6	3	4710-01-361-3983	29	15
3120-01-361-1161	11	7	4710-01-361-3984	29	9
5330-01-361-1456	6	9	2530-01-361-5075	154	1
5330-01-361-1486	KITS		3020-01-361-5142	116	10
4820-01-361-1924	122	65	4320-01-361-5145	113	5
2530-01-361-2211	150	6	2520-01-361-5148	128	3
4730-01-361-2265	23	14	3010-01-361-5150	127	105
4730-01-361-2266	18	8	3010-01-361-5151	116	6
4730-01-361-2267	43	1	2910-01-361-5154	31	1
2815-01-361-2288	9	1	3020-01-361-5169	117	10

CROSS REFERENCE INDEXES

NATIONAL STOCK NUMBER INDEX

STOCK NUMBER	FIGURE	ITEM
3020-01-361-5169	117	10
2520-01-361-5190	239	49
2520-01-361-5191	109	15
2540-01-361-5201	241	1
2520-01-361-5204	130	3
2520-01-361-5204	130	34
2520-01-361-5204	132	3
2520-01-361-5204	132	34
3120-01-361-5297	109	25
4730-01-361-5683	27	9
3020-01-361-5691	8	13
2920-01-361-5802	48	2
6695-01-361-6055	66	12
6695-01-361-6056	66	8
2815-01-361-6202	9	4
2520-01-361-6431	128	6
2520-01-361-6433	120	10
2930-01-361-6523	44	1
2815-01-361-6526	24	2
5315-01-361-6947	239	12
5330-01-361-6959	239	13
5330-01-361-6962	239	20
5340-01-361-7907	154	2
2815-01-361-8177	15	13
2910-01-361-8229	34	1
2520-01-361-8237	124	18
2520-01-361-8280	121	23
2520-01-361-8284	127	65
2815-01-361-8313	15	5
2815-01-361-8316	15	1
2815-01-361-8317	14	10
5365-01-361-8369	239	17
5325-01-361-8375	239	37
5365-01-361-8404	239	38
2530-01-361-8581	149	13
3120-01-361-9000	239	53
5330-01-361-9052	109	31
5330-01-361-9785	109	3
5340-01-362-0046	120	9
5330-01-362-0664	239	16
2520-01-362-1089	KITS	
2520-01-362-1089	KITS	
2930-01-362-1098	45	5
2815-01-362-1159	15	9
3040-01-362-1562	127	4
3040-01-362-1772	239	14
3040-01-362-1775	239	48
3040-01-362-1951	36	26
5120-01-362-2026	288	32
5120-01-362-2027	288	33
5330-01-362-3392	129	17
2520-01-362-3511	239	22
2520-01-362-3512	239	26
3040-01-362-3515	239	33
3020-01-362-3525	239	10
2520-01-362-3573	239	8
3110-01-362-4302	130	4
3110-01-362-4302	132	4
5305-01-362-4344	129	41
5305-01-362-4344	131	28
5305-01-362-4345	130	41
5305-01-362-4345	132	28
3120-01-362-4362	130	10
3120-01-362-4362	132	10
3120-01-362-4363	129	12
3120-01-362-4363	129	12
3120-01-362-4364	129	18
3120-01-362-4365	131	19
3120-01-362-4366	129	51
3120-01-362-4366	131	38
3120-01-362-4367	129	48
3120-01-362-4367	131	35
3120-01-362-4368	129	49
3120-01-362-4368	131	36
3120-01-362-4369	129	47
3120-01-362-4369	131	34
3120-01-362-4370	129	27
3120-01-362-4370	131	14
3120-01-362-4371	129	26
3120-01-362-4371	131	13
5305-01-362-4399	129	24
5305-01-362-4399	131	11
5305-01-362-4400	130	37
5305-01-362-4400	132	37
2835-01-362-4442	27	14
5306-01-362-4444	119	14
5365-01-362-4497	130	24
5365-01-362-4497	132	24
3120-01-362-4502	273	6
5340-01-362-4582	46	57
5330-01-362-4993	129	37
5330-01-362-4993	131	24
5325-01-362-4998	131	3
5365-01-362-5013	129	31
5365-01-362-5013	131	18
5365-01-362-5014	129	31
5365-01-362-5014	131	18
3120-01-362-5055	273	33
6150-01-362-5197	122	21
4710-01-362-5599	43	31
4710-01-362-5600	43	15
4730-01-362-5652	129	42
4730-01-362-5652	131	29
2920-01-362-5734	272	37

CROSS REFERENCE INDEXES

NATIONAL STOCK NUMBER INDEX

STOCK NUMBER	FIGURE	ITEM	STOCK NUMBER	FIGURE	ITEM
2520-01-362-5745	130	20	5306-01-363-1737	131	32
2520-01-362-5745	132	20	5306-01-363-1749	129	45
2520-01-362-5759	130	14	5306-01-363-1749	131	32
2520-01-362-5759	132	14	4820-01-363-2117	138	4
2815-01-362-5763	14	4	4720-01-363-2245	29	35
5330-01-362-6102	130	23	4720-01-363-2253	43	14
5330-01-362-6102	132	23	4320-01-363-2294	252	1
5305-01-362-6121	273	37	4720-01-363-2350	26	32
5325-01-362-6127	129	36	2530-01-363-2355	129	22
5325-01-362-6127	131	23	3040-01-363-2384	130	9
5330-01-362-6141	129	33	3040-01-363-2384	132	9
5330-01-362-6141	131	20	3040-01-363-2386	129	10
5365-01-362-6148	129	21	2530-01-363-2387	129	60
5365-01-362-6149	129	21	2530-01-363-2388	129	60
5365-01-362-6150	129	21	3020-01-363-2413	130	11
5365-01-362-6151	129	31	3020-01-363-2413	132	11
5365-01-362-6151	131	18	3020-01-363-2414	130	13
5365-01-362-6152	129	31	3020-01-363-2414	132	13
5365-01-362-6152	131	18	3020-01-363-2415	129	28
5365-01-362-6153	129	31	3020-01-363-2415	131	15
5365-01-362-6153	131	18	2990-01-363-2469	38	9
5365-01-362-6157	130	8	2990-01-363-2470	39	7
5365-01-362-6157	132	8	2920-01-363-2525	7	14
5340-01-362-6158	129	16	3040-01-363-2536	130	16
5310-01-362-6171	273	4	3040-01-363-2536	132	16
5340-01-362-6229	7	16	2510-01-363-2562	194	14
5935-01-362-6592	231	17	4710-01-363-2594	43	37
5365-01-362-7247	45	4	4710-01-363-2596	43	24
5310-01-362-7266	273	5	4710-01-363-2597	43	27
5305-01-362-9795	3	5	5120-01-363-2795	288	25
5305-01-362-9796	2	3	2910-01-363-3089	33	7
5305-01-362-9796	3	7	2530-01-363-3764	129	44
5305-01-362-9796	46	59	2530-01-363-3764	131	31
5305-01-362-9797	7	11	4730-01-363-4266	138	20
5305-01-362-9797	63	3	2940-01-363-4377	254	23
5305-01-362-9797	154	6	2530-01-363-4436	157	2
5305-01-362-9797	188	28	5310-01-363-4879	191	13
5305-01-363-0703	40	7	5310-01-363-4879	195	11
5310-01-363-0740	7	12	5310-01-363-4879	263	6
5310-01-363-0740	26	18	5310-01-363-4881	69	40
5310-01-363-0740	34	12	5310-01-363-4881	195	10
5310-01-363-0740	36	18	5310-01-363-4881	257	29
5310-01-363-0740	69	39	2920-01-363-5147	273	30
5310-01-363-0740	154	5	2920-01-363-5172	273	28
5310-01-363-0740	189	41	2920-01-363-5173	273	21
5310-01-363-0740	191	10	2920-01-363-5179	273	16
5310-01-363-0740	195	2	2920-01-363-5182	273	31
5310-01-363-0740	204	3	2910-01-363-6816	KITS	
5310-01-363-0740	257	7	5310-01-363-7164	130	36
5310-01-363-0740	264	42	5310-01-363-7164	132	36
5310-01-363-0740	285	11	2590-01-363-7325	3	8
5306-01-363-1737	129	45	5330-01-363-7467	KITS	

CROSS REFERENCE INDEXES

NATIONAL STOCK NUMBER INDEX

STOCK NUMBER	FIGURE	ITEM	STOCK NUMBER	FIGURE	ITEM
3020-01-363-8103	129	30	2530-01-367-2382	134	20
3020-01-363-8103	131	17	2640-01-367-5015	155	32
3020-01-363-8104	129	50	3120-01-367-6404	277	17
3020-01-363-8104	131	37	5315-01-367-6425	274	5
2520-01-363-8152	129	9	5315-01-367-6426	279	14
2520-01-363-8153	129	8	3120-01-367-6894	279	10
3040-01-363-8166	45	2	4010-01-367-9102	279	4
2520-01-363-8177	131	5	5340-01-367-9122	281	8
2520-01-363-8178	131	4	5340-01-367-9135	277	11
6220-01-363-8877	59	2	5340-01-367-9191	274	8
4720-01-363-8971	28	4	5305-01-367-9250	60	16
2920-01-364-1598	47	1	5305-01-367-9250	65	11
2920-01-364-1598	47	2	2540-01-367-9768	274	17
2540-01-364-1621	241	16	4730-01-367-9967	285	36
2540-01-364-1621	241	16	4810-01-368-0058	285	16
2510-01-364-1626	193	9	2590-01-368-1119	274	2
6220-01-364-1671	64	1	5325-01-368-2733	277	18
2530-01-364-4602	129	20	6150-01-368-3166	274	3
2530-01-364-4602	131	2	5310-01-368-5465	277	2
2540-01-364-4622	203	14	9905-01-368-5466	274	11
2540-01-364-4623	202	16	9905-01-368-5467	274	10
5310-01-364-4818	272	7	5340-01-368-5803	176	6
2510-01-364-5702	3	14	3950-01-368-7724	274	12
4320-01-364-8293	127	5	5310-01-368-8065	188	4
2510-01-364-8303	173	24	3040-01-368-8299	279	9
2510-01-364-8303	175	1	3040-01-368-8300	279	13
2510-01-364-8306	193	10	5310-01-368-8667	173	6
5355-01-364-8643	34	8	5310-01-368-8667	175	9
5935-01-365-1035	52	43	5310-01-368-8667	238	35
5935-01-365-1035	53	53	5325-01-368-8703	277	9
4320-01-365-2837	113	7	2530-01-368-9501	160	3
3020-01-365-3053	7	13	4730-01-368-9805	257	3
2510-01-365-7152	192	9	4730-01-368-9806	161	17
5310-01-365-7236	36	17	4730-01-368-9806	245	3
5310-01-365-7236	40	12	4730-01-368-9806	257	19
5310-01-365-7236	63	6	5306-01-369-0765	39	1
5310-01-365-7236	189	44	5306-01-369-0765	41	33
5310-01-365-7236	238	31	5306-01-369-0765	148	10
5310-01-365-7236	247	5	5306-01-369-0765	161	2
5310-01-365-7236	264	43	5306-01-369-0765	162	10
5310-01-365-7236	285	10	5306-01-369-0765	165	2
6680-01-365-8024	50	61	5306-01-369-0765	165	2
5340-01-365-8143	3	9	5306-01-369-0765	172	3
2510-01-365-8977	3	6	5306-01-369-0765	189	23
4730-01-365-9170	239	23	5306-01-369-0765	238	12
5940-01-366-1563	52	42	5935-01-369-0796	281	12
5940-01-366-1563	53	52	5340-01-369-0893	179	6
5210-01-366-4383	288	18	5315-01-369-1346	171	7
5310-01-367-1804	201	15	5935-01-369-1457	280	2
5310-01-367-1804	202	23	2510-01-369-2054	179	11
5310-01-367-1804	203	16	4010-01-369-3206	274	16
2530-01-367-2382	133	18	5306-01-369-3263	176	7

CROSS REFERENCE INDEXES

NATIONAL STOCK NUMBER INDEX

STOCK NUMBER	FIGURE	ITEM
5305-01-369-3264	179	10
5310-01-369-3331	40	4
5310-01-369-3331	138	30
5310-01-369-3331	140	12
5310-01-369-3332	21	11
5310-01-369-3332	46	56
5310-01-369-3332	78	8
5310-01-369-3332	112	3
5310-01-369-3332	124	2
5310-01-369-3332	137	1
5310-01-369-3332	139	9
5310-01-369-3332	140	4
5310-01-369-3332	141	6
5310-01-369-3332	142	11
5310-01-369-3332	143	11
5310-01-369-3332	144	6
5310-01-369-3332	145	9
5310-01-369-3332	147	9
5310-01-369-3332	149	2
5310-01-369-3332	151	11
5310-01-369-3332	152	7
5310-01-369-3332	172	17
5310-01-369-3332	196	3
5310-01-369-3332	242	6
5310-01-369-3332	252	26
5310-01-369-3337	2	15
5310-01-369-3337	204	13
5310-01-369-3337	249	18
5310-01-369-3337	252	31
5310-01-369-3337	268	24
5310-01-369-3337	272	27
5310-01-369-3338	2	8
5310-01-369-3338	102	8
5310-01-369-3338	167	16
5310-01-369-3338	172	10
5310-01-369-3338	179	9
5310-01-369-3338	188	36
5310-01-369-3338	238	1
5310-01-369-3338	253	10
5310-01-369-3339	163	4
5310-01-369-3339	164	6
5310-01-369-3339	166	10
5310-01-369-3339	177	8
5310-01-369-3339	179	4
5340-01-369-3356	174	8
5340-01-369-3358	155	22
5315-01-369-3376	172	26
5340-01-369-3441	26	12
5315-01-369-4912	172	27
5340-01-369-5039	38	8
5340-01-369-5039	39	5
5340-01-369-5525	174	1
5340-01-369-5626	173	15
5310-01-369-5703	168	2
5310-01-369-5703	257	11
5310-01-369-5703	268	43
5310-01-369-6073	46	61
5310-01-369-6073	102	4
5310-01-369-6073	174	2
5310-01-369-6073	177	12
5310-01-369-6073	206	5
5310-01-369-6074	172	38
5310-01-369-6074	174	3
5306-01-369-6095	41	10
5306-01-369-6095	212	7
5310-01-369-6706	30	28
5310-01-369-6706	41	6
5310-01-369-6706	69	16
5310-01-369-6706	111	6
5310-01-369-6706	159	5
5310-01-369-6706	163	1
5310-01-369-6706	163	37
5310-01-369-6706	164	2
5310-01-369-6706	164	42
5310-01-369-6706	165	4
5310-01-369-6706	167	4
5310-01-369-6706	171	3
5310-01-369-6706	172	15
5310-01-369-6706	172	17
5310-01-369-6706	173	3
5310-01-369-6706	176	2
5310-01-369-6706	177	1
5310-01-369-6706	178	4
5310-01-369-6706	207	10
5310-01-369-6706	237	1
5310-01-369-6706	238	22
5310-01-369-6706	254	7
3120-01-369-6733	21	14
3120-01-369-6733	172	21
3120-01-369-6733	257	24
5306-01-369-7504	173	2
5306-01-369-7504	175	8
5305-01-369-7507	155	29
5340-01-369-8172	173	13
5306-01-369-8191	26	36
5306-01-369-8191	39	1
5306-01-369-8191	41	13
5306-01-369-8191	167	7
5306-01-369-8191	247	12
5306-01-369-8192	177	4
5306-01-369-8192	179	13
5306-01-369-8192	188	23
5306-01-369-8193	2	6
5306-01-369-8193	102	7

CROSS REFERENCE INDEXES

NATIONAL STOCK NUMBER INDEX

STOCK NUMBER	FIGURE	ITEM
5306-01-369-8193	188	29
5305-01-369-8253	177	3
3120-01-369-8361	179	3
5310-01-369-8654	174	4
5310-01-369-8654	191	11
5306-01-369-8892	155	4
5306-01-369-8893	155	3
5310-01-369-8923	177	7
5310-01-369-8923	178	6
3120-01-369-8978	175	12
5310-01-369-9522	269	41
5310-01-369-9522	30	10
5310-01-369-9522	38	7
5310-01-369-9522	39	3
5310-01-369-9522	40	11
5310-01-369-9522	41	7
5310-01-369-9522	41	34
5310-01-369-9522	148	6
5310-01-369-9522	161	7
5310-01-369-9522	162	9
5310-01-369-9522	165	4
5310-01-369-9522	165	4
5310-01-369-9522	167	9
5310-01-369-9522	172	4
5310-01-369-9522	172	4
5310-01-369-9522	189	31
5310-01-369-9522	238	10
5310-01-369-9522	247	14
5310-01-369-9522	254	5
5310-01-370-0010	155	11
2930-01-370-0240	28	1
4720-01-370-0263	28	9
5310-01-370-0596	179	1
5340-01-370-0643	179	2
5330-01-370-0662	26	8
4710-01-370-1139	28	5
4710-01-370-1140	41	17
4720-01-370-1306	43	38
2520-01-370-1360	KITS	
2510-01-370-2726	173	7
4820-01-370-2751	155	13
4720-01-370-2818	43	26
4720-01-370-2819	41	28
4720-01-370-2820	41	29
4720-01-370-2821	41	30
2930-01-370-2867	41	21
3010-01-370-2955	172	24
4720-01-370-2999	28	7
4720-01-370-2999	41	16
4720-01-370-2999	124	15
4710-01-370-4818	28	13
4710-01-370-4819	124	16
5940-01-370-5059	52	47
5940-01-370-5059	86	20
5940-01-370-5059	87	12
4730-01-370-5378	155	13
4720-01-370-5417	28	18
2530-01-370-5462	155	8
3040-01-370-5486	251	8
2530-01-370-5530	155	1
4710-01-370-5542	26	44
5310-01-370-5548	224	1
2990-01-370-6089	40	9
5340-01-370-7066	179	8
5315-01-370-7199	26	6
5310-01-370-7447	36	11
5310-01-370-7447	36	33
5310-01-370-7447	57	7
5310-01-370-7447	78	13
5310-01-370-7447	181	17
5310-01-370-7447	181	31
5310-01-370-7447	182	28
5310-01-370-7447	186	15
5310-01-370-7447	205	13
5310-01-370-7447	263	10
6695-01-370-8679	122	53
5310-01-370-9104	176	3
5306-01-371-0876	174	6
5340-01-371-0943	26	14
5340-01-371-1077	175	3
5340-01-371-1092	176	5
2530-01-371-1488	155	2
4710-01-371-1511	18	5
5306-01-371-3099	173	14
5306-01-371-3099	175	2
2530-01-371-5836	155	6
5306-01-371-7161	111	7
5306-01-371-7161	163	31
5306-01-371-7161	164	32
5306-01-371-7161	172	19
5306-01-371-7161	237	6
5306-01-371-7162	172	6
5340-01-371-7184	188	33
5340-01-371-7188	105	3
5315-01-371-7218	188	41
5340-01-371-7258	188	17
2530-01-371-7762	172	30
5340-01-371-7957	204	5
5340-01-371-7958	250	3
3120-01-371-7961	188	13
5340-01-371-7973	188	21
3020-01-371-8206	239	52
5310-01-371-8419	173	20
5310-01-371-8419	175	6

CROSS REFERENCE INDEXES

NATIONAL STOCK NUMBER INDEX

STOCK NUMBER	FIGURE	ITEM
3120-01-371-8487	188	40
5340-01-371-9405	30	2
5365-01-371-9556	188	14
5305-01-371-9850	178	1
5340-01-371-9882	163	30
5340-01-371-9882	164	33
5365-01-371-9887	188	20
5365-01-371-9888	188	24
5340-01-372-0145	140	5
5340-01-372-0376	147	3
5340-01-372-0376	252	35
5340-01-372-0377	254	1
5340-01-372-0382	174	5
5306-01-372-0786	30	1
5306-01-372-0786	164	25
5306-01-372-0786	167	2
5306-01-372-0786	173	9
5306-01-372-0786	176	1
5306-01-372-0786	254	8
5306-01-372-0786	264	2
5306-01-372-0787	30	3
5306-01-372-0787	163	15
5306-01-372-0787	164	35
5306-01-372-0787	172	14
5306-01-372-0787	237	5
5305-01-372-1266	50	57
5305-01-372-1266	61	10
5305-01-372-1266	78	4
5305-01-372-1266	105	5
3040-01-372-1486	250	1
2940-01-372-1541	286	2
2910-01-372-1552	30	22
2510-01-372-1556	50	2
5935-01-372-1986	77	5
5930-01-372-2261	50	52
5930-01-372-2262	50	32
5930-01-372-2263	50	36
5930-01-372-2264	50	40
5340-01-372-2469	258	14
4820-01-372-2769	153	3
5120-01-372-2987	288	5
5306-01-372-3017	188	30
5310-01-372-3024	188	12
3130-01-372-3043	188	43
3130-01-372-3044	188	9
5310-01-372-3495	250	2
5306-01-372-3536	41	8
5306-01-372-3536	159	2
5306-01-372-3536	163	16
5306-01-372-3536	163	38
5306-01-372-3536	164	16
5306-01-372-3536	164	46
5306-01-372-3536	165	2
5306-01-372-3536	172	14
5306-01-372-3536	207	9
5306-01-372-3536	254	10
5306-01-372-3537	164	21
5306-01-372-3537	171	5
5120-01-372-3812	288	7
5120-01-372-3966	288	24
5210-01-372-3967	288	19
5210-01-372-3968	288	8
3040-01-372-4179	250	4
4310-01-372-4220	138	5
5999-01-372-4231	102	9
2530-01-372-4250	159	12
5120-01-372-4375	288	27
5120-01-372-4376	288	23
5120-01-372-4380	288	11
5305-01-372-4711	188	7
5305-01-372-4712	188	10
5340-01-372-4781	153	1
2510-01-372-4839	177	9
2510-01-372-4839	178	3
4730-01-372-4862	150	11
4720-01-372-4876	30	19
4720-01-372-4877	30	18
5340-01-372-4887	254	16
2530-01-372-4988	67	1
2990-01-372-5033	38	3
4310-01-372-5070	138	2
5930-01-372-5385	50	43
5930-01-372-5385	50	47
5340-01-372-5619	26	39
5340-01-372-5619	204	6
5310-01-372-5685	7	10
5310-01-372-5685	188	8
5310-01-372-5685	189	12
5310-01-372-5686	188	31
5310-01-372-5686	238	34
5340-01-372-5693	41	9
5340-01-372-5695	41	12
5310-01-372-6337	188	15
2590-01-372-6500	30	30
2590-01-372-8070	257	36
4820-01-372-8139	138	11
2590-01-372-8155	172	34
2510-01-372-8454	173	26
2510-01-372-8454	175	13
5355-01-372-8692	150	4
5355-01-372-8693	150	3
5930-01-372-9484	138	7
5310-01-373-0748	50	53
5310-01-373-0748	105	4

CROSS REFERENCE INDEXES

NATIONAL STOCK NUMBER INDEX

STOCK NUMBER	FIGURE	ITEM
5120-01-373-3281	288	6
5305-01-373-4832	179	7
5305-01-373-4832	238	26
2590-01-373-5499	177	10
5970-01-373-5691	73	8
5970-01-373-5691	77	8
5970-01-373-5691	88	8
5970-01-373-5692	90	5
6680-01-373-5740	254	17
2590-01-373-6358	41	14
5140-01-373-6823	288	2
2510-01-373-7683	175	1
6150-01-373-8336	73	4
5340-01-374-0416	63	5
5340-01-374-0422	19	3
5340-01-374-0501	111	1
4730-01-374-0686	280	1
5970-01-374-0822	73	10
5970-01-374-0822	77	6
5306-01-374-1078	28	15
5306-01-374-1078	35	1
5306-01-374-1078	40	1
5306-01-374-1078	195	17
5306-01-374-1078	254	6
5306-01-374-1078	264	28
5305-01-374-1086	111	4
5301-01-374-1086	167	14
5301-01-374-1087	2	1
5310-01-374-1381	62	1
5310-01-374-1381	67	2
5310-01-374-1381	102	16
5310-01-374-1381	186	3
5310-01-374-1382	58	8
5310-01-374-1382	243	3
5310-01-374-1382	244	3
5310-01-374-1382	263	18
5310-01-374-1382	272	10
2540-01-374-1764	189	43
5305-01-374-1787	185	15
5305-01-374-1790	181	26
5305-01-374-1790	242	10
2590-01-374-1842	177	2
2590-01-374-1844	173	4
2590-01-374-1844	175	11
5305-01-374-2294	181	9
5305-01-374-2294	181	37
5330-01-374-2325	188	2
2510-01-374-2429	2	9
2510-01-374-2462	173	16
2590-01-374-2510	KITS	
4820-01-374-2819	19	4
4820-01-374-2819	126	3
4730-01-374-2959	240	1
2510-01-374-3020	199	10
2510-01-374-3022	180	1
2510-01-374-3117	196	9
2510-01-374-3119	206	6
2510-01-374-3119	207	11
2510-01-374-3120	180	3
2510-01-374-3735	111	2
2590-01-374-3851	173	12
2815-01-374-3996	254	11
4320-01-374-4316	254	15
5310-01-374-4515	60	1
5310-01-374-4515	77	2
5310-01-374-4516	63	4
5310-01-374-4516	102	12
5310-01-374-4517	36	8
6680-01-374-5912	112	1
5305-01-374-5394	182	2
5305-01-374-5394	182	2
5305-01-374-5394	194	4
5305-01-374-5394	194	4
5305-01-374-5394	198	2
3040-01-374-5548	237	17
5999-01-374-5638	52	90
5999-01-374-5638	53	106
5999-01-374-6031	52	88
5999-01-374-6031	53	103
5365-01-374-6928	48	3
5365-01-374-6928	57	6
5365-01-374-6928	69	34
5365-01-374-6928	78	15
5365-01-374-6928	105	2
5365-01-374-6928	148	3
5365-01-374-6928	182	19
5365-01-374-6928	184	2
5365-01-374-6928	194	7
5365-01-374-6928	205	12
5365-01-374-6928	205	20
5365-01-374-6928	252	48
2540-01-374-6939	198	6
5310-01-374-6990	69	4
5310-01-374-6990	69	47
5310-01-374-6990	198	1
5310-01-374-6990	263	17
5310-01-374-6990	284	2
3010-01-374-7584	237	66
6150-01-374-7777	90	1
5940-01-374-8361	52	95
5940-01-374-8361	53	111
5940-01-374-8362	53	104
5940-01-374-8363	52	96
5940-01-374-8363	53	112

CROSS REFERENCE INDEXES

NATIONAL STOCK NUMBER INDEX

STOCK NUMBER	FIGURE	ITEM	STOCK NUMBER	FIGURE	ITEM
5355-01-374-8409	237	14	5340-01-375-3104	194	9
5940-01-374-9838	52	98	4820-01-375-3299	240	4
5940-01-374-9838	53	114	4710-01-375-3417	245	1
5940-01-374-9839	52	97	4820-01-375-3497	237	32
5940-01-374-9839	53	113	4810-01-375-3510	56	5
5365-01-374-9853	190	2	6220-01-375-3530	63	7
6620-01-374-9934	50	23	6220-01-375-3532	62	2
4730-01-375-0329	197	5	6220-01-375-3536	63	13
5961-01-375-0478	52	78	4730-01-375-3572	286	3
5961-01-375-0478	53	93	4720-01-375-3594	26	22
5365-01-375-0493	186	8	4720-01-375-3594	286	1
5935-01-375-0563	52	11	2510-01-375-3694	198	4
5935-01-375-0563	53	11	3040-01-375-3755	237	63
5310-01-375-0659	46	58	2510-01-375-3800	50	54
5310-01-375-0659	188	1	2540-01-375-3950	194	13
4810-01-375-1207	237	31	5340-01-375-4171	185	20
5340-01-375-1269	242	5	5330-01-375-4279	192	7
5325-01-375-1299	240	6	5330-01-375-4280	192	5
2540-01-375-1315	205	1	5365-01-375-5170	241	5
2540-01-375-1316	205	1	5340-01-375-5830	182	27
4730-01-375-1448	237	70	2510-01-375-6294	180	2
4730-01-375-1450	197	6	2510-01-375-6294	181	46
3040-01-375-1455	241	11	4730-01-375-6304	240	3
2920-01-375-1483	57	5	3040-01-375-6341	186	25
2510-01-375-1492	183	2	3040-01-375-6342	186	16
2510-01-375-1500	198	6	3040-01-375-6343	186	18
3020-01-375-1522	237	50	5340-01-375-6450	186	7
3040-01-375-1571	237	21	5310-01-375-6890	241	13
2510-01-375-1673	196	9	5310-01-375-6890	241	13
2510-01-375-1900	206	1	5970-01-375-7084	52	91
2510-01-375-1901	180	3	5970-01-375-7084	53	107
2540-01-375-1903	194	26	5970-01-375-7086	52	89
3010-01-375-2123	237	62	5970-01-375-7086	53	105
5310-01-375-2159	241	10	2510-01-375-7117	180	6
5365-01-375-2172	2	16	2510-01-375-7117	181	52
5305-01-375-2855	182	26	2540-01-375-7119	198	4
5305-01-375-2855	196	21	5306-01-375-7128	185	18
5305-01-375-2855	246	20	5305-01-375-7158	183	7
5305-01-375-2856	58	6	5305-01-375-7158	185	9
5305-01-375-2856	187	4	5305-01-375-7158	199	3
5305-01-375-2856	189	33	5310-01-375-7167	241	9
5305-01-375-2860	194	15	5310-01-375-7175	196	11
5340-01-375-2864	240	10	3110-01-375-7194	237	56
5330-01-375-2905	194	19	5340-01-375-7249	240	8
5330-01-375-2906	183	5	5340-01-375-7257	186	9
5330-01-375-2907	BULK	64	5315-01-375-7279	185	21
5330-01-375-2908	186	20	2540-01-375-7316	240	5
5330-01-375-2909	198	7	2540-01-375-7317	240	7
5340-01-375-2927	185	10	3010-01-375-7321	186	22
5340-01-375-3042	197	1	3010-01-375-7322	186	5
5340-01-375-3042	197	1	3010-01-375-7323	186	24
5340-01-375-3101	78	5	3040-01-375-7325	181	11

CROSS REFERENCE INDEXES

NATIONAL STOCK NUMBER INDEX

STOCK NUMBER	FIGURE	ITEM	STOCK NUMBER	FIGURE	ITEM
3040-01-375-7325	181	40	5355-01-376-3675	185	3
5305-01-375-7357	253	5	6220-01-376-3676	54	1
3040-01-375-7396	185	16	6220-01-376-3744	50	20
3040-01-375-7397	186	17	2540-01-376-4001	194	11
2540-01-375-7404	184	4	2590-01-376-4484	241	4
5340-01-375-7613	194	12	3040-01-376-4546	237	48
2915-01-375-7624	162	5	5310-01-376-4745	194	17
2510-01-375-7990	181	14	5330-01-376-5259	192	8
2510-01-375-7991	181	4	5310-01-376-5302	68	6
2510-01-375-7992	181	50	5310-01-376-5302	78	9
2510-01-375-7993	181	34	5310-01-376-5302	151	10
2510-01-375-7994	186	23	5310-01-376-5302	152	18
2510-01-375-7995	186	4	5310-01-376-5302	185	19
2990-01-375-8110	39	2	5310-01-376-5302	190	12
2510-01-375-8116	190	4	5310-01-376-5302	196	2
2510-01-375-8117	199	11	2510-01-376-5661	198	9
2540-01-375-8121	36	6	2990-01-376-5662	260	7
3040-01-375-8191	36	10	6150-01-376-7889	103	1
2510-01-375-8328	192	1	5340-01-376-9486	163	3
5340-01-375-9070	186	12	5340-01-376-9486	164	4
5310-01-376-0488	188	35	5306-01-377-0274	191	14
5340-01-376-0541	52	92	5340-01-377-0296	78	27
5340-01-376-0541	53	108	4010-01-377-0335	168	9
5340-01-376-0542	52	93	4010-01-377-0335	212	6
5340-01-376-0542	53	109	6150-01-377-0409	74	1
5315-01-376-0576	169	2	5305-01-377-0696	195	15
5315-01-376-0576	170	8	5306-01-377-0750	163	27
5315-01-376-0576	187	7	5306-01-377-0750	164	36
5315-01-376-0576	253	6	5306-01-377-0750	173	10
2510-01-376-0667	180	6	5306-01-377-0771	26	45
2510-01-376-0667	181	43	5306-01-377-0852	26	40
2510-01-376-0668	183	10	5305-01-377-0867	195	12
5340-01-376-0672	181	47	5340-01-377-0893	148	20
5340-01-376-0676	194	16	5340-01-377-0914	163	19
5320-01-376-0699	185	13	5340-01-377-0914	164	19
5320-01-376-0699	199	6	5306-01-377-0960	167	12
5320-01-376-0699	200	10	5340-01-377-1066	163	14
5310-01-376-0772	183	4	5340-01-377-1066	164	15
5310-01-376-0772	185	1	5306-01-377-1072	167	5
5310-01-376-0772	198	8	5306-01-377-1072	238	40
5310-01-376-0772	199	2	5935-01-377-1136	52	28
5310-01-376-0773	241	18	5935-01-377-1136	53	32
5935-01-376-1385	52	44	5330-01-377-1534	193	11
5935-01-376-1385	53	54	5330-01-377-1535	193	5
6620-01-376-1613	50	11	5340-01-377-1543	197	2
5340-01-376-1830	208	5	5340-01-377-1544	163	23
5940-01-376-1907	52	99	5306-01-377-1544	164	27
5940-01-376-1907	53	115	5306-01-377-1544	207	22
6110-01-376-2260	57	9	5340-01-377-1545	181	12
2510-01-376-2624	192	4	5340-01-377-1545	181	39
5340-01-376-2889	181	23	5306-01-377-1546	158	5
5355-01-376-3674	36	2	5340-01-377-1548	148	16

CROSS REFERENCE INDEXES

NATIONAL STOCK NUMBER INDEX

STOCK NUMBER	FIGURE	ITEM
5340-01-377-1548	252	52
5340-01-377-1609	163	33
5340-01-377-1609	164	31
5330-01-377-1625	193	2
5330-01-377-1638	193	8
5330-01-377-1640	193	7
5340-01-377-1643	147	7
5365-01-377-1995	180	5
5365-01-377-1995	181	3
5365-01-377-1995	181	45
5365-01-377-1995	196	4
5365-01-377-1995	283	7
5330-01-377-1997	192	2
5340-01-377-2458	191	12
5340-01-377-2804	147	5
2540-01-377-3038	241	15
2510-01-377-3040	163	22
2510-01-377-3040	164	28
2510-01-377-3041	200	7
4820-01-377-3042	161	16
2540-01-377-3121	191	4
2540-01-377-3121	195	14
2540-01-377-3121	195	14
2510-01-377-3124	163	21
2510-01-377-3124	164	24
2530-01-377-3127	159	7
2510-01-377-3210	200	11
2510-01-377-4279	163	8
2510-01-377-4279	164	10
2510-01-377-4283	200	17
2510-01-377-4284	200	18
2510-01-377-4285	200	16
2510-01-377-4286	200	9
2510-01-377-4287	195	6
3040-01-377-4289	149	21
2540-01-377-4293	191	15
2590-01-377-4295	198	5
2540-01-377-4296	184	5
2510-01-377-4333	200	6
2510-01-377-4334	163	28
2510-01-377-4334	164	41
9905-01-377-4799	246	4
9905-01-377-5096	246	1
5330-01-377-5224	208	4
5340-01-377-6171	102	6
5340-01-377-6171	148	5
5340-01-377-6171	161	5
5340-01-377-6171	268	26
2510-01-377-6603	163	18
2510-01-377-6603	164	17
2510-01-377-6604	163	39
2510-01-377-6604	164	47
2590-01-377-6605	163	24
2590-01-377-6605	164	30
2540-01-377-6607	167	10
2510-01-377-6608	200	15
2430-01-377-6614	158	18
4710-01-377-6616	161	8
2530-01-377-6617	159	14
4720-01-377-6618	161	11
3010-01-377-6805	186	19
4730-01-377-6820	30	21
4730-01-377-6820	268	16
5340-01-377-7216	181	8
5340-01-377-7216	181	32
5340-01-377-7217	158	17
2540-01-377-7499	167	13
2540-01-377-7500	167	8
4730-01-377-7523	67	4
9905-01-377-7788	246	15
9905-01-377-7789	246	19
2510-01-377-8986	111	5
9905-01-377-9117	246	5
9905-01-377-9725	246	14
5340-01-378-0021	138	3
5340-01-378-0022	138	1
6350-01-378-0973	68	1
5340-01-378-2475	252	36
5340-01-378-2532	138	35
5365-01-378-2881	19	2
5365-01-378-2881	126	2
5365-01-378-2881	249	9
5365-01-378-2881	251	2
2590-01-378-3023	163	6
5310-01-378-3135	185	23
5310-01-378-3135	187	1
5310-01-378-3135	246	23
5355-01-378-3348	158	19
5340-01-378-3617	152	6
5340-01-378-3990	162	8
2530-01-378-5649	158	21
2530-01-378-6001	158	1
9905-01-378-6628	246	2
5330-01-378-7541	241	8
4730-01-378-7846	268	7
4730-01-378-8084	146	11
4730-01-378-8668	161	18
4910-01-378-8897	181	28
2540-01-378-9352	185	5
2590-01-379-4568	237	7
5306-01-379-5092	2	11
5306-01-379-5092	188	5
5970-01-379-7195	91	3
5970-01-379-7195	92	3

CROSS REFERENCE INDEXES

NATIONAL STOCK NUMBER INDEX

STOCK NUMBER	FIGURE	ITEM	STOCK NUMBER	FIGURE	ITEM
5970-01-379-7195	93	3	5930-01-381-7489	51	13
5970-01-379-7195	94	3	5930-01-381-7489	51	21
5970-01-379-7195	95	3	5930-01-381-7489	257	53
5970-01-379-7195	96	3	5930-01-381-7489	257	58
5970-01-379-7195	97	3	4730-01-381-8281	264	38
5970-01-379-7195	98	3	4730-01-381-8286	257	35
5970-01-379-7195	99	3	4710-01-381-8667	257	46
5970-01-379-7195	100	3	2990-01-381-8678	260	1
5970-01-379-7352	195	8	4730-01-381-8730	264	46
3940-01-379-7371	168	1	4730-01-381-8730	266	47
5340-01-379-8747	148	8	4710-01-381-8909	258	28
5340-01-379-8747	161	6	4730-01-381-8912	258	21
5325-01-380-7889	196	6	4730-01-381-8912	264	45
5306-01-380-9991	130	7	4730-01-381-8927	154	12
5306-01-380-9991	132	7	4730-01-381-8927	257	16
5305-01-381-1542	239	1	5306-01-381-9797	159	4
2590-01-381-1559	242	8	5306-01-381-9797	163	11
2540-01-381-1626	257	1	5306-01-381-9797	167	1
2510-01-381-1817	215	1	5306-01-381-9797	238	24
5315-01-381-1935	210	14	5325-01-381-9806	158	2
5340-01-381-2092	259	2	5310-01-381-9819	26	51
5330-01-381-2357	239	2	5310-01-381-9819	41	38
4730-01-381-2828	264	26	5310-01-381-9819	58	9
4320-01-381-2850	264	12	5310-01-381-9819	139	14
5310-01-381-3281	158	23	5310-01-381-9819	148	7
5310-01-381-3281	241	12	5310-01-381-9819	161	3
5310-01-381-3281	241	12	5310-01-381-9819	189	1
5310-01-381-3281	247	9	5310-01-381-9819	247	16
5340-01-381-3770	264	5	5310-01-381-9819	252	54
5340-01-381-3813	264	7	5310-01-381-9819	257	37
5340-01-381-3820	268	19	5310-01-381-9819	258	31
4730-01-381-3844	264	19	5310-01-381-9819	264	11
5340-01-381-3852	264	29	5310-01-381-9819	268	29
5340-01-381-3855	197	4	5310-01-381-9830	28	11
5340-01-381-3855	197	4	5310-01-381-9830	35	6
5340-01-381-3871	258	35	5310-01-381-9830	40	2
5310-01-381-3878	185	4	5310-01-381-9830	102	11
5340-01-381-3940	30	7	5310-01-381-9830	147	1
5340-01-381-3947	257	32	5310-01-381-9830	191	3
2540-01-381-3967	268	1	5310-01-381-9830	195	7
5365-01-381-3976	283	5	5310-01-381-9830	254	4
5340-01-381-3996	264	6	5310-01-381-9849	26	42
5935-01-381-4054	87	11	5310-01-381-9849	26	42
5935-01-381-4161	79	5	5307-01-381-9863	259	13
5935-01-381-4308	88	9	5330-01-381-9897	161	14
1005-01-381-5431	283	1	5310-01-381-9901	69	3
2540-01-381-5860	270	1	5310-01-381-9901	69	48
5930-01-381-7489	50	31	5306-01-381-9928	177	14
5930-01-381-7489	50	35	5310-01-381-9929	78	30
5930-01-381-7489	50	39	5310-01-381-9929	153	2
5930-01-381-7489	50	51	5310-01-381-9929	183	9
5930-01-381-7489	51	9	5310-01-381-9929	283	17

CROSS REFERENCE INDEXES

NATIONAL STOCK NUMBER INDEX

STOCK NUMBER	FIGURE	ITEM
5306-01-381-9941	2	7
5306-01-381-9941	174	7
5306-01-381-9941	177	13
5306-01-381-9941	206	4
5306-01-381-9941	238	2
5310-01-381-9945	272	33
5310-01-381-9974	283	4
5310-01-381-9990	259	12
9905-01-382-1109	246	8
5305-01-382-1173	258	32
4710-01-382-2052	258	22
2590-01-382-2061	242	4
5305-01-382-4111	51	2
5305-01-382-4111	56	1
5305-01-382-4111	257	49
5340-01-382-5021	2	10
5306-01-382-5054	47	50
5975-01-382-5358	235	2
6150-01-382-5387	262	1
2590-01-382-6719	283	14
5310-01-382-7024	258	4
5306-01-382-7538	159	1
5306-01-382-7538	163	5
5306-01-382-7538	164	7
5945-01-382-8214	52	79
5945-01-382-8214	53	96
6680-01-382-8299	50	58
3040-01-382-8736	135	5
3040-01-382-8736	136	12
5945-01-382-8925	52	81
5945-01-382-8925	53	94
5330-01-382-9753	239	35
5935-01-383-0583	52	49
5935-01-383-0583	53	57
6220-01-383-0792	61	3
4330-01-383-2290	254	22
2510-01-383-2372	51	4
2510-01-383-2372	257	50
5340-01-383-2413	30	23
6625-01-383-2558	50	17
4710-01-383-5064	26	33
2910-01-383-5096	264	44
2540-01-383-5134	270	17
2510-01-383-5135	283	22
4730-01-383-5173	257	4
2530-01-383-5209	145	3
4710-01-383-5247	268	22
4730-01-383-5276	258	26
4720-01-383-5284	264	30
2990-01-383-5285	265	1
2540-01-383-5328	270	9
4820-01-383-5329	257	12
4710-01-383-5344	264	24
2930-01-383-5391	258	18
4720-01-383-5395	264	14
2540-01-383-5411	264	1
2540-01-383-5416	270	14
2910-01-383-5417	257	59
4720-01-383-5508	257	30
2540-01-383-5509	258	1
2540-01-383-5543	270	17
4730-01-383-5730	239	3
2540-01-383-5754	270	3
4730-01-383-5786	264	31
2530-01-383-5846	150	9
4710-01-383-5876	270	13
5945-01-383-5900	57	1
2540-01-383-5962	270	17
5945-01-383-8377	55	3
5340-01-383-8797	252	46
5340-01-383-8847	177	15
5340-01-383-9581	21	13
5340-01-383-9586	241	20
5340-01-383-9823	210	15
5340-01-383-9824	196	16
6220-01-383-9914	269	2
6220-01-384-0085	167	6
5340-01-384-0113	215	5
5310-01-384-0162	26	50
5340-01-384-0377	220	1
6220-01-384-0399	167	3
2590-01-384-0717	206	7
2590-01-384-0717	207	12
5340-01-384-0746	21	12
2530-01-384-0805	36	5
5340-01-384-0867	124	1
5310-01-384-0869	197	7
4730-01-384-0881	252	42
2590-01-384-0894	124	8
2510-01-384-0910	206	9
2510-01-384-0910	207	16
2540-01-384-0975	199	4
2540-01-384-0975	200	2
5340-01-384-1036	252	27
2510-01-384-1051	283	6
5340-01-384-1120	182	30
2930-01-384-1197	45	1
2530-01-384-1284	159	11
4730-01-384-1441	135	2
4730-01-384-1441	136	9
5310-01-384-1977	50	27
5330-01-384-2025	KITS	
5310-01-384-2526	264	4
5306-01-384-3431	35	5

CROSS REFERENCE INDEXES

NATIONAL STOCK NUMBER INDEX

STOCK NUMBER	FIGURE	ITEM
5306-01-384-3431	191	5
5306-01-384-3431	195	19
5340-01-384-3451	149	25
5305-01-384-3457	54	4
5340-01-384-3471	56	3
5306-01-384-3485	111	3
5306-01-384-3485	167	17
5306-01-384-3485	172	13
5306-01-384-3485	173	25
5306-01-384-3485	254	9
5305-01-384-3487	57	10
5305-01-384-3487	182	22
5935-01-384-3582	262	2
6110-01-384-5101	106	4
5930-01-384-5419	66	6
4710-01-384-6214	21	9
4710-01-384-6229	124	21
3020-01-384-6236	7	1
2540-01-384-6247	241	14
4730-01-384-6270	43	22
4330-01-384-6317	20	1
4720-01-384-6531	264	34
5365-01-384-6869	217	2
5310-01-384-7280	50	28
5310-01-384-7280	61	1
5310-01-384-7280	78	1
2530-01-384-9002	140	8
5305-01-384-9164	23	7
5340-01-384-9527	149	5
5340-01-384-9538	217	3
5930-01-384-9598	151	6
3810-01-384-9668	274	1
5305-01-385-0754	153	18
5305-01-385-0754	257	44
5340-01-385-2003	57	8
5307-01-385-3377	186	1
5330-01-385-3769	215	6
5930-01-385-4301	239	6
3120-01-385-4540	149	26
2815-01-385-4719	7	5
2990-01-385-5730	26	7
5306-01-385-6980	191	1
5306-01-385-6980	195	1
5306-01-385-6980	264	16
4320-01-385-7015	257	31
4320-01-385-7015	260	11
5306-01-385-7034	252	47
5999-01-385-8325	52	14
5999-01-385-8325	53	14
2510-01-385-8887	51	1
2510-01-385-8887	257	48
2940-01-385-8931	135	3
2940-01-385-8931	135	6
2940-01-385-8931	136	10
2940-01-385-8931	136	13
2540-01-385-9462	271	1
5340-01-386-3479	215	16
5305-01-386-3501	253	22
5340-01-386-3522	215	3
5306-01-386-3966	69	15
5306-01-386-3966	173	1
9905-01-386-5295	246	9
4720-01-386-5655	263	1
5360-01-386-6087	158	6
5340-01-386-6208	218	24
5340-01-386-6208	219	28
4730-01-386-6634	56	4
2540-01-386-6897	221	9
5305-01-386-7845	51	5
5305-01-386-7845	205	3
5305-01-386-7845	205	15
5305-01-386-7845	257	55
5306-01-386-7853	164	36
5306-01-386-7853	164	44
4020-01-386-8148	271	11
5340-01-386-8153	218	1
5340-01-386-8163	38	10
5340-01-386-8163	39	9
5340-01-386-8163	268	33
4010-01-386-8180	237	4
5325-01-386-8186	168	5
5325-01-386-8186	169	3
5325-01-386-8186	170	1
5325-01-386-8186	172	28
5325-01-386-8186	189	29
5325-01-386-8186	212	3
5325-01-386-8186	216	13
5325-01-386-8186	238	16
5325-01-386-8186	253	7
5340-01-386-8493	238	30
5340-01-386-8504	237	2
5330-01-386-9019	264	9
5310-01-386-9041	189	34
5306-01-386-9065	268	42
5340-01-386-9663	238	13
5306-01-387-0075	159	3
5306-01-387-0097	166	11
5340-01-387-0556	238	32
5305-01-387-2156	56	2
5305-01-387-2156	249	16
5330-01-387-2165	162	3
5340-01-387-2170	238	4
5306-01-387-2267	162	4
5305-01-387-3059	62	9

CROSS REFERENCE INDEXES

NATIONAL STOCK NUMBER INDEX

STOCK NUMBER	FIGURE	ITEM
5306-01-387-3083	238	28
2540-01-387-3972	270	2
9905-01-387-3975	236	3
2540-01-387-3976	271	14
2540-01-387-3987	271	7
2540-01-387-3988	271	5
2540-01-387-3991	271	3
2510-01-387-3998	257	23
5340-01-387-4083	238	36
5340-01-387-4083	238	36
6220-01-387-4250	60	10
2940-01-387-4397	162	2
6220-01-387-4576	163	29
6220-01-387-4576	164	34
5940-01-387-4708	52	20
5940-01-387-4708	53	24
3040-01-387-4726	238	23
6220-01-387-4799	163	25
6220-01-387-4799	164	37
5975-01-387-4800	238	27
6680-01-387-4987	162	6
3020-01-387-5008	238	5
5975-01-387-5066	238	29
2990-01-387-5196	263	13
5340-01-387-5389	237	3
3815-01-387-5655	238	11
5306-01-387-6028	271	12
5306-01-387-6028	271	17
5306-01-387-6046	254	3
5306-01-387-6046	257	8
5305-01-387-6177	40	3
5305-01-387-6177	138	39
5305-01-387-6177	189	32
5305-01-387-6177	283	2
5315-01-387-6180	168	4
5306-01-387-6182	195	16
5315-01-387-6191	168	7
5340-01-387-6193	205	14
5305-01-387-6195	50	26
5306-01-387-6223	191	9
6150-01-387-6375	261	1
5340-01-387-6787	252	12
3040-01-387-7055	238	8
4730-01-387-7116	252	28
5970-01-387-7193	262	3
2990-01-387-7201	40	13
2990-01-387-7205	40	5
3040-01-387-7213	238	37
3040-01-387-7220	238	33
9905-01-387-7385	236	7
9905-01-387-7439	236	6
5306-01-387-8001	2	14
5340-01-387-8231	270	5
5340-01-387-8265	270	6
2510-01-387-8469	173	8
5306-01-387-9170	17	4
5330-01-387-9490	126	5
5330-01-387-9490	154	9
2990-01-387-9524	37	1
3120-01-387-9781	238	18
5310-01-387-9787	42	4
5340-01-387-9831	196	16
5340-01-387-9853	149	1
5307-01-388-0489	36	3
5306-01-388-0500	122	19
2815-01-388-0665	7	6
5315-01-388-0908	270	11
5340-01-388-0948	112	4
2510-01-388-1131	190	11
2510-01-388-1196	175	7
2510-01-388-1204	175	4
2990-01-388-1262	257	17
2510-01-388-1296	258	2
5220-01-388-1460	287	30
5330-01-388-1528	122	29
3120-01-388-1568	238	38
5330-01-388-1576	115	2
2510-01-388-1920	190	13
5310-01-388-2043	68	4
5310-01-388-2043	102	17
5310-01-388-2043	148	14
5305-01-388-2091	120	19
9905-01-388-2276	236	5
2540-01-388-2781	149	19
3020-01-388-2799	127	109
9905-01-388-3659	236	2
5120-01-388-3660	289	16
4010-01-388-3680	168	6
4010-01-388-3680	169	4
4010-01-388-3680	170	7
4010-01-388-3680	172	29
4010-01-388-3680	187	9
4010-01-388-3680	238	17
4010-01-388-3680	253	8
4010-01-388-3680	283	16
5330-01-388-4084	188	39
2510-01-388-4276	190	9
5120-01-388-4436	289	1
5120-01-388-4439	289	2
3020-01-388-4633	8	14
2815-01-388-4658	15	10
2590-01-388-4717	254	13
2520-01-388-4778	117	19
2510-01-388-4847	193	4

CROSS REFERENCE INDEXES

NATIONAL STOCK NUMBER INDEX

STOCK NUMBER	FIGURE	ITEM	STOCK NUMBER	FIGURE	ITEM
4730-01-388-5390	122	4	5305-01-389-8022	46	45
4810-01-388-5428	122	25	5310-01-389-8037	252	51
2590-01-388-5469	196	14	5340-01-389-9118	208	12
2510-01-388-5475	185	2	2510-01-389-9627	2	4
4710-01-388-5501	271	2	4730-01-389-9628	29	21
4730-01-388-5503	117	18	4730-01-389-9629	35	15
4730-01-388-5503	268	31	5935-01-390-0329	86	18
2910-01-388-5518	33	4	2590-01-390-1038	242	4
2510-01-388-5581	185	2	2590-01-390-1041	41	15
5120-01-388-5617	289	4	2540-01-390-1042	149	20
5120-01-388-5621	289	5	5120-01-390-1104	289	14
5120-01-388-5623	289	3	5120-01-390-1105	289	18
2920-01-388-5637	52	51	5306-01-390-1141	30	4
2920-01-388-5637	53	64	5306-01-390-1141	164	39
2920-01-388-5639	52	62	5306-01-390-1141	172	13
2920-01-388-5639	53	76	2510-01-390-1448	2	2
2520-01-388-5818	109	28	5307-01-390-1878	46	55
5999-01-388-6493	52	48	2920-01-390-3590	26	21
5999-01-388-6493	53	56	2510-01-390-3730	190	10
5935-01-388-7318	52	67	5340-01-390-3741	263	16
5935-01-388-7318	53	84	4710-01-390-4471	43	30
9905-01-388-7836	236	4	4710-01-390-5716	154	11
6625-01-388-8341	259	1	5365-01-390-5878	122	91
5315-01-388-8569	251	4	56365-01-390-5882	122	89
5340-01-388-9103	155	10	5365-01-390-7141	KITS	
5306-01-389-0076	69	24	5365-01-390-7141	KITS	
5306-01-389-0093	30	11	2520-01-390-8083	KITS	
5306-01-389-0139	172	12	2520-01-390-8083	KITS	
2530-01-389-0350	133	7	3040-01-390-8212	129	56
2530-01-389-0350	134	11	5305-01-390-8482	130	1
5120-01-389-0658	289	15	5305-01-390-8482	130	18
5120-01-389-1220	289	9	5305-01-390-8482	132	1
5120-01-389-1223	289	7	5305-01-390-8482	132	18
5305-01-389-1253	26	17	5305-01-390-8483	130	26
2590-01-389-2223	172	35	5305-01-390-8483	132	26
5340-01-389-2348	181	24	5305-01-390-8484	KITS	
5340-01-389-2367	181	35	5365-01-390-8484	KITS	
5305-01-389-2387	181	7	5305-01-390-8485	129	62
5305-01-389-2387	181	33	5305-01-390-8490	131	7
5340-01-389-2408	181	49	5310-01-390-9049	257	21
5340-01-389-2419	26	43	4730-01-391-0769	129	52
3040-01-389-4265	270	10	4730-01-391-0769	131	39
5330-01-389-6028	155	5	2530-01-391-0772	133	9
5330-01-389-6109	183	3	2530-01-391-0773	133	6
6210-01-389-6456	257	52	2530-01-391-0773	134	10
5340-01-389-6992	208	11	2520-01-391-0775	KITS	
5340-01-389-7004	43	19	2520-01-391-0775	KITS	
5305-01-389-7009	252	34	3120-01-391-2219	129	13
3040-01-389-7019	160	9	3120-01-391-2219	129	58
3040-01-389-7826	270	15	5365-01-391-2791	KITS	
5305-01-389-7965	181	10	5365-01-391-2791	KITS	
5305-01-389-7965	181	41	5315-01-391-2792	129	32

CROSS REFERENCE INDEXES

NATIONAL STOCK NUMBER INDEX

STOCK NUMBER	FIGURE	ITEM
5315-01-391-2792	131	19
5340-01-391-2794	129	25
5340-01-391-2794	131	12
5935-01-391-3153	52	19
5935-01-391-3153	53	23
4710-01-391-3192	271	10
4710-01-391-3193	271	4
2530-01-391-3228	KITS	
2530-01-391-3228	KITS	
5120-01-391-3541	289	6
2530-01-391-3785	131	43
5120-01-391-5133	289	10
5310-01-391-5248	133	8
5310-01-391-5248	134	15
5310-01-391-5249	130	19
5310-01-391-5249	132	19
5120-01-391-5350	289	11
2530-01-391-5854	134	16
2530-01-391-5859	KITS	
5120-01-391-6913	289	12
5310-01-391-7887	173	19
5310-01-391-7887	175	5
5340-01-391-9682	69	45
2530-01-391-9921	158	11
3110-01-392-0167	238	7
4720-01-392-0316	19	1
2520-01-392-0318	KITS	
4710-01-392-0326	129	43
4710-01-392-0326	131	30
5305-01-392-1634	129	15
5330-01-392-1637	129	46
5330-01-392-1637	131	33
2530-01-392-2312	158	7
3120-01-392-2959	KITS	
3120-01-392-2959	KITS	
3130-01-392-3395	130	28
3130-01-392-3395	132	28
9905-01-392-6499	246	9
9905-01-392-8089	246	18
5360-01-392-9389	45	19
5340-01-393-0789	30	16
3040-01-393-0945	238	19
2940-01-393-0970	26	10
2590-01-393-2153	198	3
9905-01-393-2581	246	17
2540-01-393-2717	271	1
2520-01-393-2726	KITS	
2520-01-393-2726	KITS	
3010-01-393-2740	45	20
4910-01-393-4531	181	25
4820-01-393-4532	30	27
4820-01-393-4532	254	18
5330-01-393-5626	45	17
5330-01-393-5630	45	15
9905-01-393-6277	246	9
9905-01-393-6342	245	40
2990-01-393-7761	66	3
5340-01-393-8500	208	8
2530-01-394-0392	KITS	
2530-01-394-0392	KITS	
5340-01-394-0424	255	11
5340-01-394-0427	256	11
5340-01-394-0428	256	12
5340-01-394-0429	255	13
5340-01-394-0430	256	26
5340-01-394-0431	256	27
5340-01-394-2395	256	13
5340-01-394-2397	277	29
5330-01-394-2410	255	3
5330-01-394-2411	256	3
5330-01-394-2412	281	14
5315-01-394-2413	169	11
5340-01-394-2731	170	4
5365-01-394-2734	209	1
5365-01-394-2735	209	3
5315-01-394-2736	166	8
5340-01-394-2737	170	6
5315-01-394-2739	169	5
5315-01-394-2743	169	7
5315-01-394-3546	265	80
5340-01-394-4477	277	30
5985-01-394-4637	277	10
4730-01-394-4791	139	16
2530-01-394-4794	KITS	
2530-01-394-4794	KITS	
5340-01-394-5380	129	5
6110-01-394-5707	260	51
6110-01-394-5707	265	65
5310-01-394-5970	207	14
5340-01-394-5978	281	4
5340-01-394-6377	255	15
5340-01-394-6377	256	17
5340-01-394-6379	169	9
5340-01-394-6380	207	3
5340-01-394-6382	207	13
5315-01-394-7292	170	3
5340-01-394-7386	260	72
5340-01-394-7386	265	46
5325-01-394-7389	265	29
5340-01-394-7390	265	17
5340-01-394-7391	260	50
5340-01-394-7391	265	64
5340-01-394-7392	260	41
5340-01-394-7392	265	3

CROSS REFERENCE INDEXES

NATIONAL STOCK NUMBER INDEX

STOCK NUMBER	FIGURE	ITEM	STOCK NUMBER	FIGURE	ITEM
5340-01-394-7393	265	79	5340-01-395-1260	260	78
3120-01-394-7850	277	21	5340-01-395-1261	260	62
4720-01-394-8135	BULK	59	5340-01-395-1262	260	33
4540-01-394-8137	260	68	5340-01-395-1263	260	38
4540-01-394-8137	265	41	5340-01-395-1264	260	22
4720-01-394-8138	BULK	60	5340-01-395-1265	260	17
4730-01-394-8139	260	87	5340-01-395-1266	260	53
4710-01-394-8142	260	88	6105-01-395-1311	265	15
2530-01-394-8332	134	5	3120-01-395-1383	277	3
6105-01-394-8589	260	36	3120-01-395-1386	277	4
5305-01-394-9284	37	7	5306-01-395-1389	207	4
5306-01-394-9295	46	47	5925-01-395-1496	281	2
2540-01-394-9681	206	8	9902-01-395-2086	246	9
2540-01-394-9681	207	15	4720-01-395-2232	41	5
2520-01-394-9686	265	12	2815-01-395-2233	42	1
4820-01-394-9688	265	49	6150-01-395-2542	265	21
2540-01-394-9689	237	42	6150-01-395-2543	260	42
5305-01-395-0138	139	17	6150-01-395-2545	260	66
5315-01-395-0140	166	7	2930-01-395-3438	265	24
5340-01-395-0141	265	43	5920-01-395-3748	260	46
5315-01-395-0142	166	9	5920-01-395-3748	265	72
5305-01-395-0143	204	4	3020-01-395-3980	277	22
5305-01-395-0143	207	6	5325-01-395-4214	265	28
5305-01-395-0145	260	92	5330-01-395-4645	260	16
5305-01-395-0145	265	55	5340-01-395-5097	102	5
5315-01-395-0163	260	3	3040-01-395-5244	277	7
3020-01-395-0417	279	11	4530-01-395-6057	260	81
3940-01-395-0605	169	1	4530-01-395-6057	265	53
3940-01-395-0606	169	6	2510-01-395-7278	207	1
3940-01-395-0608	169	10	3040-01-395-7279	277	28
5310-01-395-0816	207	17	3020-01-395-7281	260	63
5310-01-395-0817	207	18	3020-01-395-7281	265	33
5310-01-395-0818	265	78	5310-01-395-7646	260	77
5305-01-395-0821	265	22	5310-01-395-7647	260	32
5305-01-395-0822	265	9	5310-01-395-7861	265	68
5310-01-395-0823	260	91	5340-01-395-8022	147	4
5310-01-395-0823	265	14	5945-01-395-8628	265	5
5310-01-395-0825	265	10	6150-01-396-0893	265	27
5305-01-395-0826	265	56	4530-01-396-1376	265	52
5305-01-395-0836	265	4	5340-01-396-3950	46	6
5315-01-395-0837	265	76	5325-01-396-4320	46	9
5330-01-395-0839	265	26	5315-01-396-5839	166	4
5305-01-395-0841	260	25	3120-01-396-7108	265	25
5340-01-395-1245	265	67	5340-01-396-7237	208	10
5330-01-395-1252	155	26	5930-01-396-7393	265	30
5340-01-395-1253	260	47	4820-01-396-7750	166	1
5340-01-395-1253	265	74	2510-01-396-8119	256	25
5340-01-395-1254	265	23	3130-01-396-8388	46	10
5340-01-395-1255	265	11	8145-01-396-8895	256	2
5340-01-395-1256	265	20	2510-01-396-9061	255	24
5340-01-395-1258	260	67	8145-01-396-9507	256	18
5340-01-395-1258	265	42	5340-01-397-0288	270	16

CROSS REFERENCE INDEXES

NATIONAL STOCK NUMBER INDEX

STOCK NUMBER	FIGURE	ITEM	STOCK NUMBER	FIGURE	ITEM
5306-01-397-0298	265	77	2540-01-398-8355	218	18
5305-01-397-0299	265	31	5315-01-398-8682	166	6
5325-01-397-0332	276	19	5340-01-398-3683	275	9
5340-01-397-0337	276	18	2815-01-398-9928	14	1
5340-01-397-0338	275	11	7690-01-399-0346	256	22
4140-01-397-2228	46	29	2920-01-399-0794	46	21
2990-01-397-2316	265	81	2815-01-399-0833	6	4
3020-01-397-2324	276	10	3020-01-399-0840	237	73
3020-01-397-2326	276	20	3040-01-399-0842	237	72
5945-01-397-2744	275	4	2590-01-399-0855	163	12
6105-01-397-2828	276	21	2590-01-399-0855	164	13
6150-01-397-4819	275	6	2540-01-399-0878	201	5
6150-01-397-4820	275	7	2590-01-399-1404	275	12
5365-01-397-5097	218	4	3120-01-399-1541	6	1
5365-01-397-5097	219	17	2510-01-399-1816	181	15
5365-01-397-5098	218	19	3950-01-399-4205	276	14
2590-01-397-5305	275	10	2530-01-399-4207	162	1
2590-01-397-5308	276	17	2540-01-399-4208	220	15
5305-01-397-5912	276	15	3040-01-399-6250	276	16
5305-01-397-5913	275	2	5935-01-399-7113	281	5
5305-01-397-5914	276	11	9905-01-400-1415	236	11
5360-01-397-6860	237	75	2510-01-400-2670	210	9
3950-01-397-7047	276	12	5930-01-406-2359	260	76
3830-01-397-7048	275	3	5945-01-406-2360	260	37
5315-01-397-7325	277	24	2835-01-406-3776	238	6
8145-01-397-7426	255	17	3040-01-406-3930	218	21
9905-01-397-7508	265	8	2835-01-406-5474	184	1
3120-01-397-8140	237	74	5310-01-406-6326	36	19
3010-01-397-8591	276	9	5930-01-406-7217	50	4
3010-01-397-8592	276	7	5315-01-406-7423	216	14
5310-01-397-8760	213	4	5315-01-406-7426	170	5
5310-01-398-1126	275	8	5315-01-406-9152	210	10
5305-01-398-1288	218	30	5365-01-406-9213	130	29
6105-01-398-1913	237	8	5365-01-406-9213	132	29
2930-01-398-2009	16	9	5340-01-406-9696	240	11
5315-01-398-2314	212	5	5905-01-406-9697	167	15
5365-01-398-2344	218	37	5905-01-407-0035	50	3
5340-01-398-2818	26	11	5905-01-407-0037	66	7
2540-01-398-4505	218	7	5340-01-407-0493	199	9
2540-01-398-4505	219	16	5340-01-407-0493	200	3
4730-01-398-4688	44	5	5330-01-407-0494	36	20
5999-01-398-4763	158	4	5340-01-407-0507	265	70
2510-01-398-5570	181	29	5930-01-407-1580	260	40
4730-01-398-5654	218	14	5930-01-407-1580	265	2
4730-01-398-5654	219	45	5305-01-407-1612	129	3
5360-01-398-6552	275	1	5330-01-407-1644	125	1
5975-01-398-6914	237	78	2590-01-407-1906	163	7
5975-01-398-6915	237	77	2590-01-407-1906	164	9
2540-01-398-6969	220	7	5310-01-407-4748	188	11
2520-01-398-8321	16	14	5310-01-407-4764	260	19
3040-01-398-8354	218	11	5310-01-407-4764	265	18
3040-01-398-8354	219	8	5340-01-407-5392	164	1

CROSS REFERENCE INDEXES

NATIONAL STOCK NUMBER INDEX

STOCK NUMBER	FIGURE	ITEM
5940-01-407-5587	52	31
5940-01-407-5587	53	35
5940-01-407-5587	104	5
2815-01-407-5718	14	7
3120-01-407-6556	260	57
2530-01-407-9251	KITS	
2990-01-407-9264	37	2
2590-01-407-9283	196	14
5330-01-408-0930	69	46
3040-01-408-1012	KITS	
5340-01-408-2771	164	18
4730-01-408-3169	264	41
5365-01-408-5884	218	5
5365-01-408-5884	219	11
5340-01-408-8527	31	7
5340-01-409-0209	275	5
5340-01-410-7118	214	8
4730-01-410-8063	139	15
5340-01-410-8393	205	4
5340-01-410-8393	205	17
5340-01-410-8396	205	2
5340-01-410-8397	205	10
5340-01-410-8398	205	2
5340-01-410-8400	205	9
4320-01-410-8799	265	54
9905-01-410-8866	236	13
5340-01-410-9095	235	8
5340-01-410-9096	208	2
5315-01-410-9101	172	33
5340-01-410-9102	257	9
5320-01-411-0081	245	57
3940-01-411-0389	214	4
4730-01-411-0665	257	38
5340-01-411-0870	260	8
5925-01-411-1031	274	6
5340-01-411-1620	205	2
2540-01-411-2141	205	1
2540-01-411-2142	205	1
2510-01-411-2433	164	45
2510-01-411-2471	164	43
6220-01-411-3584	64	2
2930-01-411-3967	233	1
2510-01-411-3968	181	21
4730-01-411-3969	257	27
5306-01-411-5012	31	6
2540-01-411-5532	265	73
3040-01-411-5535	277	23
5310-01-411-5797	188	16
5310-01-411-5798	73	2
5310-01-411-5798	148	21
4730-01-411-7545	29	24
4730-01-411-7546	264	40
5315-01-411-9052	260	6
2815-01-412-0269	42	6
5340-01-412-1743	205	2
5120-01-412-1818	287	2
2540-01-412-3853	241	2
2510-01-412-3855	222	13
2510-01-412-4611	222	30
4730-01-412-5193	35	9
6150-01-412-7286	264	8
2510-01-412-8155	222	2
3020-01-413-0077	237	59
2510-01-413-2594	193	1
2510-01-413-2594	193	6
3950-01-413-3666	237	53
3040-01-413-3829	237	57
3040-01-413-3889	237	68
3040-01-413-4020	31	8
5306-01-413-7704	31	27
5310-01-413-8475	250	8
8145-01-413-8516	255	1
8145-01-413-8521	256	1
2540-01-414-1245	201	5
5305-01-414-3650	237	69
5120-01-414-7398	288	29
5310-01-415-1606	31	25
5120-01-415-3558	288	31
5180-01-415-5896	289	20
5330-01-415-9632	247	41
5340-01-416-0498	189	40
5310-01-416-3010	247	59
5325-01-416-3098	247	68
5360-01-416-3101	247	43
5310-01-416-4339	188	34
5340-01-416-5312	204	9
5305-01-416-6662	247	79
5305-01-416-6664	247	24
5305-01-416-6665	247	81
5305-01-416-6668	247	77
4730-01-416-6795	247	78
4730-01-416-6798	247	71
4730-01-416-6800	247	83
4730-01-416-6801	247	31
5315-01-416-7214	253	20
5340-01-416-7227	189	38
5340-01-416-7228	189	11
5340-01-416-7232	249	17
5325-01-416-8895	247	47
5330-01-416-8898	34	2
5340-01-416-9963	191	16
5330-01-416-9964	247	74
5340-01-416-9965	191	16
5330-01-416-9966	147	69

CROSS REFERENCE INDEXES

NATIONAL STOCK NUMBER INDEX

STOCK NUMBER	FIGURE	ITEM
5340-01-416-9967	38	2
5307-01-416-9968	172	20
5340-01-416-9971	34	3
2590-01-417-0860	124	5
5310-01-417-1041	247	49
5305-01-417-1174	247	51
5305-01-417-1175	247	58
5310-01-417-1262	189	19
5310-01-417-1262	282	8
4820-01-417-1559	247	34
2590-01-417-1733	172	5
2590-01-417-1737	172	23
4310-01-417-2228	247	25
2990-01-417-2242	265	39
4330-01-417-2265	247	45
4320-01-417-2266	247	61
4820-01-417-2267	249	31
4820-01-417-2268	249	32
4320-01-417-2269	248	5
3040-01-417-2271	247	65
4320-01-417-2272	247	75
2510-01-417-2276	189	10
2540-01-417-2277	189	35
2510-01-417-2280	189	14
2510-01-417-2285	189	37
4730-01-417-2669	247	23
4320-01-417-2739	247	73
2990-01-417-2745	249	14
3040-01-417-2746	172	32
2940-01-417-2755	26	1
4730-01-417-3197	KITS	
2990-01-417-3198	249	4
6680-01-417-3362	247	22
5340-01-417-3788	247	27
5365-01-417-3812	253	12
5310-01-417-3814	172	19
4010-01-417-4525	172	18
4010-01-417-4529	253	14
4930-01-417-4876	247	21
4730-01-417-4887	31	20
2540-01-417-4888	204	7
5330-01-417-5104	247	26
5330-01-417-5105	247	55
5330-01-417-5107	247	80
5340-01-417-5114	189	2
3040-01-417-5835	247	28
2510-01-417-5847	181	6
2815-01-417-6186	247	54
2940-01-417-6187	247	30
2910-01-417-6189	247	46
2510-01-417-6190	181	48
3040-01-417-6191	253	24
2510-01-417-6192	181	51
2510-01-417-6193	181	38
6210-01-417-7033	50	44
5340-01-417-7793	260	10
5330-01-417-7794	247	70
5330-01-417-7795	247	40
4820-01-417-9117	249	29
2940-01-417-9333	249	25
2510-01-417-9339	181	20
5340-01-417-9898	247	66
3040-01-418-0002	247	48
4820-01-418-0003	249	37
4810-01-418-0299	264	32
5305-01-418-1921	253	11
2805-01-418-2057	28	2
5340-01-418-2903	253	13
2530-01-418-3385	247	64
4820-01-418-6390	247	32
4820-01-418-6393	189	24
3040-01-418-7591	247	63
2910-01-418-7593	34	7
3990-01-418-8756	212	4
2520-01-418-9010	110	1
7690-01-418-9373	255	22
4730-01-418-9501	249	41
2815-01-419-0222	1	1
6685-01-419-2990	66	2
2590-01-419-2991	36	9
6620-01-419-2992	66	5
6145-01-419-3345	BULK	45
6145-01-419-3913	BULK	46
6115-01-419-4033	46	1
5340-01-419-9941	245	19
5340-01-419-9944	245	30
6110-01-420-1229	46	30
5305-01-420-3156	201	18
5305-01-420-3156	202	20
5305-01-420-3156	203	20
5340-01-420-3525	208	9
5305-01-420-3756	245	12
9390-01-420-4560	78	12
4730-01-420-4738	249	24
5340-01-420-5139	78	31
2510-01-420-5182	245	37
2510-01-420-5183	245	39
2510-01-420-5184	245	60
5325-01-420-5383	245	59
4730-01-420-5910	43	35
6150-01-420-5987	74	3
5325-01-420-6001	78	17
5325-01-420-6138	78	23
6240-01-420-7268	245	21

CROSS REFERENCE INDEXES

NATIONAL STOCK NUMBER INDEX

STOCK NUMBER	FIGURE	ITEM
5940-01-420-7315	52	58
5940-01-420-7315	53	71
5340-01-420-7613	163	26
5340-01-420-7614	163	40
5340-01-420-7614	164	48
5310-01-420-7615	2	12
5999-01-420-7757	52	33
5999-01-420-7757	53	37
5999-01-420-7757	104	7
6110-01-420-7839	52	63
6110-01-420-7839	53	77
6110-01-420-7840	52	68
6110-01-420-7840	53	81
4730-01-420-7908	245	41
2540-01-420-7928	238	25
3120-01-420-8269	188	32
6240-01-420-8320	59	11
5975-01-420-8392	245	58
2930-01-420-8621	245	13
5365-01-420-8859	188	3
6150-01-420-9199	82	1
6150-01-420-9200	81	1
5340-01-420-9793	245	54
5340-01-420-9895	245	26
2990-01-420-9957	71	1
2510-01-420-9972	188	22
2530-01-420-9976	188	26
2590-01-421-1655	189	42
5310-01-421-3089	247	37
4820-01-421-3402	247	39
6150-01-421-3552	52	1
5340-01-421-4196	172	22
5340-01-421-4196	187	10
5340-01-421-4197	238	39
2540-01-421-4591	245	10
2540-01-421-4592	245	50
2590-01-421-5159	245	22
5305-01-421-6046	245	16
5306-01-421-6054	270	22
5330-01-421-6102	245	46
5330-01-421-6103	245	36
5330-01-421-6105	245	42
5330-01-421-6107	BULK	81
5330-01-421-6107	245	44
5330-01-421-6107	245	45
5306-01-421-6167	102	13
5940-01-421-6922	72	8
7690-01-421-7857	260	30
6140-01-421-8203	69	26
6140-01-421-8207	69	13
6140-01-421-8216	69	11
6140-01-421-8220	69	10
6140-01-421-8339	69	12
2540-01-421-8753	245	47
5310-01-421-9556	58	7
5310-01-421-9556	246	21
4730-01-421-9633	245	34
4720-01-421-9718	BULK	69
4720-01-421-9723	BULK	57
5935-01-421-9754	78	24
5935-01-421-9768	52	94
5935-01-421-9768	53	110
4720-01-422-0242	BULK	58
5935-01-422-0363	72	7
5325-01-422-2609	245	38
5325-01-422-2610	245	56
4140-01-422-2618	46	26
2530-01-422-2827	136	8
6150-01-422-3450	72	1
6150-01-422-3452	89	1
6150-01-422-3453	77	4
6150-01-422-3454	85	1
6150-01-422-3455	86	1
6150-01-422-3459	83	1
6150-01-422-3592	87	1
5940-01-422-3593	58	4
5920-01-422-3648	46	35
5340-01-422-4327	46	13
5925-01-422-4743	52	73
5925-01-422-4743	52	102
5925-01-422-4743	53	88
5925-01-422-4745	52	75
5925-01-422-4745	53	90
5925-01-422-4746	52	71
5925-01-422-4746	53	86
5925-01-422-4747	52	74
5925-01-422-4747	53	89
5925-01-422-4748	52	76
5925-01-422-4748	53	91
4710-01-422-5575	30	26
6150-01-422-5660	245	31
7690-01-422-5682	245	51
2590-01-422-7146	188	38
5975-01-422-7556	70	2
2540-01-422-7757	245	25
2540-01-422-7758	245	11
4720-01-422-8313	245	33
5310-01-422-8575	46	38
5935-01-422-8717	86	25
5905-01-422-9203	57	2
4720-01-422-9375	245	49
6105-01-423-0136	46	19
6115-01-423-0138	46	17
7690-01-423-0249	91	5

CROSS REFERENCE INDEXES

NATIONAL STOCK NUMBER INDEX

STOCK NUMBER	FIGURE	ITEM	STOCK NUMBER	FIGURE	ITEM
7690-01-423-0249	92	5	3120-01-424-1525	46	7
7690-01-423-0249	93	5	5330-01-424-3523	24	1
7690-01-423-0249	94	5	5340-01-424-3550	172	40
7690-01-423-0249	95	5	5950-01-424-4089	46	20
7690-01-423-0249	96	5	5330-01-424-4552	119	12
7690-01-423-0249	97	5	3040-01-424-5401	8	24
7690-01-423-0249	98	5	5930-01-424-5755	245	20
7690-01-423-0249	99	5	2815-01-424-6156	15	12
7690-01-423-0249	100	5	4030-01-424-6542	253	16
5330-01-423-0596	245	52	5330-01-424-6629	122	95
5330-01-423-0623	245	35	5330-01-424-6629	122	99
5330-01-423-0689	245	53	5330-01-424-6629	127	32
5310-01-423-0781	273	47	5330-01-424-7905	13	4
5340-01-423-0782	172	7	5305-01-425-9997	239	5
5325-01-423-0783	88	10	2590-01-426-2347	163	34
5310-01-423-0880	46	40	2590-01-426-2347	164	23
5365-01-423-0888	189	46	4910-01-426-3974	287	1
4010-01-423-0892	172	39	5340-01-426-4418	58	5
5340-01-423-0894	253	18	5340-01-426-4418	272	26
5340-01-423-0897	172	11	5340-01-426-4653	251	10
5340-01-423-0945	189	15	2590-01-426-7041	195	5
5340-01-423-0972	41	35	4720-01-426-7042	253	3
5340-01-423-0972	148	18	5340-01-426-7635	28	12
4010-01-423-0974	253	17	4720-01-426-7848	248	4
5340-01-423-1002	36	1	4720-01-426-7849	137	21
2540-01-423-2336	201	13	4720-01-426-7853	251	7
6220-01-423-2337	269	1	4720-01-426-7854	247	6
5340-01-423-2345	2	5	5310-01-426-8406	190	8
4720-01-423-2962	BULK	70	5310-01-426-8406	196	8
4720-01-423-2965	BULK	56	5340-01-427-9810	148	17
5310-01-423-3722	158	10	5340-01-427-9810	247	15
5310-01-423-3725	158	9	2510-01-428-1691	200	12
5310-01-423-3725	158	12	2510-01-428-1696	200	13
7690-01-423-3971	245	27	5340-01-428-4045	210	1
4710-01-423-4873	124	5	2540-01-428-6195	185	7
4710-01-423-4906	21	9	4820-01-428-6849	249	35
5999-01-423-5170	70	3	4720-01-428-6939	253	4
5999-01-423-5170	272	25	4730-01-428-9693	249	39
6150-01-423-5385	101	1	4820-01-428-9695	249	33
5945-01-423-5549	58	1	4820-01-428-9696	249	40
6150-01-423-6332	74	2	2510-01-428-9699	200	8
3030-01-423-6537	44	13	4720-01-428-9859	249	7
5930-01-423-6887	66	1	5340-01-429-0964	210	2
4320-01-423-7597	8	28	2510-01-429-1301	199	5
6150-01-423-7736	84	1	5330-01-429-3089	30	13
6150-01-423-7745	79	1	4720-01-429-3835	253	19
6150-01-423-7763	80	1	4720-01-429-3835	253	23
5306-01-423-9937	158	8	3040-01-429-7904	31	12
5306-01-423-9937	158	13	6150-01-429-8189	104	1
5305-01-424-0075	8	25	3040-01-429-8345	189	8
5306-01-424-0079	36	12	4720-01-429-9895	143	9
3120-01-424-1028	46	22	4720-01-429-9897	142	9

CROSS REFERENCE INDEXES

NATIONAL STOCK NUMBER INDEX

STOCK NUMBER	FIGURE	ITEM
5340-01-430-2354	28	14
4720-01-430-2719	146	2
4720-01-430-2720	251	1
4820-01-430-3427	31	3
5330-01-430-3477	127	64
6150-01-430-3540	76	1
2815-01-430-3787	8	22
5306-01-430-8791	46	41
5306-01-430-8791	273	18
5306-01-430-8802	46	24
6115-01-431-5092	272	1
5330-01-431-7575	196	15
5330-01-431-7575	204	12
5340-01-431-8755	179	5
2815-01-432-0183	9	3
4320-01-432-0321	248	1
6115-01-432-2684	272	1
5330-01-432-2690	130	21
5330-01-432-2690	132	21
5340-01-432-9161	188	19
5365-01-433-1005	201	14
5365-01-433-1005	202	22
5365-01-433-1005	203	17
6680-01-433-1894	21	5
7690-01-433-1895	50	48
6695-01-433-1897	182	25
5365-01-433-1913	201	17
5365-01-433-1913	202	19
5365-01-433-1913	203	19
5325-01-433-4746	197	8
5306-01-433-4753	13	1
6160-01-433-4985	69	1
6160-01-433-5002	69	32
5310-01-433-5836	44	11
5310-01-433-5837	31	28
5305-01-433-6841	186	10
5305-01-433-6842	186	13
4030-01-433-7225	182	11
5365-01-433-7232	188	18
5365-01-433-7233	181	22
5340-01-433-7299	182	12
3020-01-433-8134	44	16
5305-01-433-8406	201	16
5365-01-433-8407	31	29
5365-01-433-8467	181	5
6115-01-433-8557	272	35
5340-01-433-9842	164	40
4820-01-433-9857	41	2
5315-01-433-9938	188	27
2590-01-434-0592	167	8
5306-01-434-0875	178	5
5305-01-434-0879	186	6
5315-01-434-0915	173	18
5315-01-434-0915	173	23
5340-01-434-1338	69	54
6110-01-434-1486	182	14
4730-01-434-1983	41	4
4730-01-434-1983	124	14
4730-01-434-2163	43	25
5330-01-434-2867	194	2
5315-01-434-3300	31	23
5310-01-434-3778	178	7
2540-01-434-4542	167	15
2815-01-434-5168	14	5
2815-01-434-5169	4	7
2815-01-434-5171	13	3
2930-01-434-5219	42	2
2930-01-434-5220	42	7
2590-01-434-5221	187	5
2590-01-434-5433	172	16
2590-01-434-5435	164	26
2590-01-434-5436	164	8
5315-01-434-5844	173	17
5315-01-434-5844	173	22
5340-01-434-8087	164	38
3040-01-434-8708	31	24
3040-01-434-8709	31	30
2540-01-435-0593	182	8
5310-01-435-1736	69	6
5340-01-435-3190	187	3
2540-01-435-6228	194	24
5325-01-435-6359	227	4
6330-01-435-7338	69	56
5340-01-435-9087	195	4
6150-01-435-9924	122	20
2540-01-436-1180	194	1
2510-01-436-1359	194	25
5310-01-436-1664	187	6
4730-01-436-2123	43	13
5365-01-436-3422	270	20
5325-01-436-6556	187	8
5325-01-436-6556	216	11
5365-01-436-8308	40	8
5365-01-436-8308	195	13
2920-01-436-9862	272	21
2510-01-437-0748	182	21
2540-01-437-1411	182	4
2540-01-437-1413	182	32
2540-01-437-1463	271	1
5325-01-437-2388	226	6
2510-01-437-4202	182	18
5945-01-437-8072	265	16
3040-01-437-8112	36	13
4820-01-438-1521	189	3

CROSS REFERENCE INDEXES

NATIONAL STOCK NUMBER INDEX

STOCK NUMBER	FIGURE	ITEM	STOCK NUMBER	FIGURE	ITEM
5365-01-438-2640	271	8	4810-01-439-5567	264	35
5365-01-438-2640	271	15	2540-01-439-5674	206	3
5340-01-438-3539	32	2	2540-01-439-5674	207	8
2540-01-438-5919	270	4	2510-01-439-5681	166	12
6110-01-438-6252	273	36	2540-01-439-5684	195	14
6685-01-438-6660	43	5	2815-01-439-5725	109	32
6680-01-438-6678	41	23	2590-01-439-5730	109	9
5340-01-438-7231	36	27	5305-01-439-6427	109	17
5340-01-438-8822	272	12	3020-01-439-6621	46	46
5340-01-438-8908	210	1	5330-01-439-6677	123	4
5340-01-438-8924	283	19	4720-01-439-6728	139	32
5340-01-438-9440	139	21	4720-01-439-6769	146	1
5306-01-439-0022	147	6	4720-01-439-6919	146	10
4330-01-439-0032	260	14	2530-01-439-7482	141	5
5340-01-439-0280	283	18	4820-01-439-7484	138	27
5305-01-439-0355	183	1	4730-01-439-7485	124	17
5310-01-439-0818	273	19	3040-01-439-7488	117	12
5340-01-439-0820	272	4	5340-01-439-7766	148	20
5340-01-439-0821	41	32	2520-01-439-8297	113	7
5340-01-439-0843	30	6	4320-01-439-8329	113	5
5310-01-439-0845	25	6	5330-01-439-8823	122	90
5340-01-439-0846	164	29	5365-01-439-9017	249	5
4140-01-439-1956	273	45	3120-01-439-9133	113	6
5360-01-439-2300	209	8	4720-01-439-9696	139	26
6680-01-439-2380	50	58	4720-01-439-9698	137	10
5310-01-439-2542	272	9	4720-01-439-9699	285	4
5310-01-439-2543	272	6	4720-01-439-9700	137	11
2990-01-439-3058	66	4	4720-01-439-9701	139	35
4720-01-439-3201	146	6	4720-01-439-9703	285	2
5340-01-439-3246	195	18	4720-01-439-9705	139	40
5305-01-439-3247	181	27	4720-01-439-9706	139	19
5305-01-439-3258	129	6	4720-01-439-9708	139	36
5340-01-439-3347	195	18	4720-01-439-9709	139	34
5340-01-439-3756	272	28	4710-01-439-9712	26	54
5340-01-439-3757	191	2	4730-01-439-9884	139	37
5340-01-439-3757	195	20	5999-01-440-0342	273	11
5340-01-439-3757	195	20	5999-01-440-0370	273	7
5340-01-439-3758	191	2	5330-01-440-1092	BULK	61
5340-01-439-3758	195	20	5340-01-440-1195	254	19
5315-01-439-3775	283	20	5306-01-440-1293	195	3
5360-01-439-3864	209	6	5305-01-440-1298	253	5
5365-01-439-4257	122	91	5340-01-440-1540	36	21
5305-01-439-4830	272	14	5325-01-440-2178	40	6
3120-01-439-4848	273	46	5920-01-440-2790	273	24
4720-01-439-5075	26	47	4720-01-440-3701	252	6
4720-01-439-5076	26	27	6220-01-440-3743	165	3
4720-01-439-5077	43	17	6220-01-440-4784	165	1
4720-01-439-5078	26	46	4730-01-440-4855	257	13
2510-01-439-5269	163	36	5340-01-440-6733	3	4
2510-01-439-5301	163	35	4720-01-440-7367	26	27
3040-01-439-5484	113	4	5340-01-440-7686	26	52
4720-01-439-5563	139	31	5340-01-440-7687	247	18

CROSS REFERENCE INDEXES

NATIONAL STOCK NUMBER INDEX

STOCK NUMBER	FIGURE	ITEM
5945-01-440-9799	272	5
5340-01-441-1014	26	53
2990-01-441-1649	257	43
5305-01-441-3346	21	15
5325-01-441-7650	258	3
5340-01-442-1027	242	12
5310-01-442-1717	35	7
5310-01-442-2436	106	11
5340-01-442-2651	270	28
4720-01-442-2837	252	9
5330-01-442-2871	KITS	
5325-01-442-3597	270	21
3040-01-442-3643	177	6
4720-01-442-4369	252	22
5306-01-442-4848	257	5
2540-01-442-5243	270	3
2940-01-442-7349	26	24
4720-01-442-7836	257	20
6150-01-442-8571	270	27
6150-01-442-8572	270	31
4810-01-442-8695	35	8
5340-01-442-8701	252	29
5340-01-442-9165	69	2
6160-01-442-9783	69	43
6160-01-442-9795	69	35
5340-01-443-0317	123	2
5895-01-443-0848	51	20
5340-01-443-1360	242	13
5340-01-443-1390	247	1
5325-01-443-1459	105	7
5895-01-443-1949	51	16
2590-01-443-2208	46	53
2590-01-443-2213	172	16
5310-01-443-2558	202	21
5310-01-443-2558	203	18
6680-01-443-3284	50	14
2510-01-443-4585	274	4
4820-01-443-5012	135	18
3020-01-443-5093	272	36
4720-01-443-6457	250	5
4720-01-443-6472	126	1
4820-01-443-6578	249	27
5330-01-443-8050	239	15
5355-01-443-8112	270	36
4820-01-443-9908	197	3
5306-01-444-0593	177	11
4720-01-444-2333	161	1
5330-01-444-2514	208	3
5340-01-444-2639	46	52
2990-01-444-3688	249	38
9390-01-446-0572	268	14
9905-01-446-5072	246	13
5315-01-446-5592	237	76
5315-01-447-2297	188	37
4710-01-447-2936	28	10
6695-01-447-4065	153	4
4730-01-447-4312	161	9
4730-01-447-4313	161	12
5340-01-448-0474	254	2
5305-12-126-8925	260	54
5305-12-142-5547	260	31
5305-12-142-5728	182	10
5365-12-156-4447	172	25
5365-12-156-4709	260	64
5365-12-156-4709	265	34
5310-12-162-2131	26	30
2990-12-185-7328	260	39
2990-12-185-7328	265	19
2990-12-185-7332	260	59
2910-12-185-7336	260	93
5305-12-187-5147	260	18
5305-12-187-5147	265	13
5310-12-196-5989	26	20
5310-12-196-5989	52	101
5310-12-196-5989	78	3
5310-12-196-5989	182	3
5310-12-196-5989	185	22
5310-12-196-5989	186	2
5310-12-196-5989	187	2
5310-12-196-5989	272	11
5975-12-305-7493	260	27
5975-12-305-7493	265	6
5310-12-319-0394	69	18
4710-12-321-0893	265	62
4710-12-325-1896	260	94
4530-12-336-1647	260	80
2990-12-336-2740	KITS	
2540-12-336-5270	260	2
4520-01-336-7642	260	26
3120-99-730-3539	247	42

CROSS REFERENCE INDEXES

FIGURE AND ITEM NUMBER INDEX

FIGURE NO	ITEM NO	STOCK NUMBER	FSCM	PART NUMBER
BULK	1	4720-01-226-3714	30327	A110
BULK	2	4710-00-060-8269	81346	A269-55GRADETP304
BULK	3	4720-01-124-0621	81343	A52426-1K
BULK	5	6145-00-635-9459	81349	CO-01HGF (1/6) 0520
BULK	6	4720-01-003-6706	13174	C608-100BLK
BULK	7	4720-01-014-4915	81343	J844TYBSIZE 3/8 BLACK
BULK	8	4720-01-086-8667	78280	LP-3239-120
BULK	9	8315-00-006-9835	81349	MIL-F-21840
BULK	10	4720-00-913-1937	70628	MILH8796
BULK	11	6145-00-926-6300	81349	MW-C6 (133) J4
BULK	12	6145-01-229-4134	81349	M16878/14BKE9
BULK	13		81349	M16878/14BKE90
BULK	14		81349	M16878/14BKE91
BULK	15		81349	M16878/14BKE92
BULK	16		81349	M16878/16-BKE0
BULK	17		81349	M16878/16-BKE1
BULK	18		81349	M16878/16-BKE2
BULK	19		81349	M16878/16-BKE4
BULK	20		81349	M16878/16-BKE5
BULK	21		81349	M16878/16-BKE6
BULK	22		81349	M16878/16-BKE9
BULK	23		81349	M16878/16-BLE0
BULK	24		81349	M16878/16-BLE1
BULK	25		81349	M16878/16-BLE2
BULK	26		81349	M16878/16-BLE4
BULK	27		81349	M16878/16-BLE5
BULK	28		81349	M16878/16-BLE9
BULK	29		81349	M16878/16-BLG6
BULK	30		81349	M16878/16-BMG0
BULK	31		81349	M16878/16-BMG2
BULK	32		81349	M16878/16-BMG5
BULK	33		81349	M16878/16-BMG6
BULK	34		81349	M16878/16-BMG9
BULK	35		81349	M16878/16-BPL0
BULK	36		81349	M16878/16-BPL2
BULK	37		81349	M16878/16-BPL5
BULK	38		81349	M16878/16-BPL6
BULK	39		81349	M16878/16-BPL9
BULK	40		81349	M16878/16-BSL0
BULK	41		81349	M16878/16-BSL2
BULK	42		81349	M16878/16-BSL6
BULK	43		81349	M16878/16-BSP5
BULK	44		81349	M16878/16-BSP9
BULK	45	6145-01-419-3345	81349	M16878/16BRL0
BULK	46	6145-01-419-3913	81349	M16878/16BUS0
BULK	47		81349	M16878/16BWT0
BULK	48	4720-01-132-7124	81349	M62217/1-10-BULK
BULK	49	4720-01-132-7124	81349	M62217/1-10BULK
BULK	50	4720-01-047-9541	81349	M62217/1-12-BULK

CROSS REFERENCE INDEXES

FIGURE AND ITEM NUMBER INDEX

FIGURE NO	ITEM NO	STOCK NUMBER	FSCM	PART NUMBER
				LB
BULK	51	4720-01-122-9847	81349	M62217/1-16BULK
BULK	52	4010-01-026-1855	81349	M83420/4-005
BULK	53	4720-01-014-4915	79470	NT-100-6
BULK	54	4720-00-443-4746	79470	NT-10004-BLK
BULK	55	4720-01-009-9058	61424	PFT-10B-BLK-100
BULK	56	4720-01-423-2965	77060	R-67587
BULK	57	4720-01-421-9723	77060	R-68234
BULK	58	4720-01-422-0242	77060	R-71305
BULK	59	4720-01-394-8135	81343	SAE J30R2TYPE1-1 /2 IN ID
BULK	60	4720-01-394-8138	81343	SAE J30R2TYPE1-3 /8 IN ID
BULK	61	5330-01-440-1092	0VXY8	STN2.38X.5
BULK	62	5975-00-178-1218	78799	THINWALL1INCH
BULK	63	9320-00-324-5629	71643	100S
BULK	64	5330-01-375-2907	0FW39	12417469
BULK	65		0FW39	12420420-001
BULK	66		0FW39	12420420-002
BULK	67		0FW39	12420420-003
BULK	68		19207	12420924-001
BULK	69	4720-01-421-9718	0FW39	12420924-004
BULK	70	4720-01-423-2962	0FW39	12420924-005
BULK	71		19207	12420924-008
BULK	72		0FW39	12421663-002
BULK	73	4720-00-836-7189	01276	1503-4
BULK	74	5330-01-257-1709	56329	2418974-1
BULK	75	4720-00-278-4892	00624	2565-6
BULK	76	4720-00-670-6037	01276	2565-8
BULK	77	4720-00-930-4515	01276	2766-8
BULK	78	4720-00-898-5108	01276	2807-10
BULK	79	4720-00-254-5957	01276	2807-4
BULK	80	4720-00-542-4688	80244	33H581
BULK	81	5330-01-421-6107	24234	352302
BULK	82	4720-01-913-5910	49185	483666
BULK	83	5975-01-123-8811	93908	49005
BULK	84	5975-00-839-6089	93908	49007
BULK	85	5975-00-204-9190	93908	49008
BULK	86	5975-01-144-1912	93908	49010
BULK	87	5975-01-131-9492	93908	49011
BULK	88	8315-00-935-6762	70898	50-534718-19
BULK	89	5975-00-178-1216	79466	51231
BULK	90	4130-01-010-9170	07687	6000140-9
BULK	91	4720-00-809-2428	19207	8711054
BULK	92	4720-00-882-1379	98441	881-16
KITS		2590-01-374-2510	0EJ14	9402
KITS			0EJ14	9401
KITS		5330-01-360-9098	11083	9X8318
KITS		5330-01-344-2572	0EJ14	9403
KITS		5365-01-391-2791	78500	4718
KITS		2520-01-391-0775	78500	4721
KITS		5365-01-391-2791	78500	4718

CROSS REFERENCE INDEXES

FIGURE AND ITEM NUMBER INDEX

FIGURE NO	ITEM NO	STOCK NUMBER	FSCM	PART NUMBER
KITS		5365-01-390-7141	78500	4714
KITS		2920-01-087-0997	19207	5705042
KITS		2530-01-394-0392	78500	4725
KITS		2530-01-394-4794	78500	4727
KITS		2530-01-407-9251	78500	4707
KITS		2530-01-394-4794	78500	4727
KITS		3120-01-392-2959	78500	4726
KITS		5365-01-390-7141	78500	4714
KITS		2520-01-392-0318	78500	4705
KITS		5365-01-390-8484	78500	4715
KITS		2530-01-394-0392	78500	4725
KITS		5365-01-390-8484	78500	4715
KITS		2520-01-393-2726	78500	4724
KITS		5330-01-360-5987	11083	5R9051
KITS		2520-01-391-0775	78500	4721
KITS		2530-01-391-5859	78500	4706
KITS		2520-01-393-2726	78500	4724
KITS		3120-01-392-2959	78500	4726
KITS		2910-01-363-6816	11083	5R9065
KITS		5330-01-361-1486	11083	7X2528
KITS		5330-01-363-7467	11083	7X2521
KITS		5330-01-442-2871	11083	7X2524
KITS		5330-01-360-5976	11083	7X2526
KITS		5340-01-159-9530	35510	71057
KITS		5330-01-360-5988	11083	7X2525
KITS		5330-01-384-2025	11083	4R9803
KITS			73342	29526899
KITS		3040-01-408-1012	73342	29513126
KITS			73342	29503829
KITS		2990-12-336-2740	62380	219.495
KITS		2520-01-362-1089	78500	R674X
KITS		4440-01-337-7324	06721	RN-60-A
KITS		2520-01-362-1089	78500	R674X
KITS		2530-01-391-3228	78500	MPS4012
KITS		2520-01-390-8083	78500	KIT4710
KITS		2530-01-361-2346	78500	MPS-4285
KITS		2520-01-370-1360	78500	KT-16SB
KITS		2530-01-391-3228	78500	MPS4012
KITS		2530-01-361-2346	78500	MPS-4285
KITS		2520-01-390-8083	78500	KIT4710
KITS		4730-01-417-3197	06721	DQ-6025
KITS		5330-01-344-2573	0EJ14	9638
1	1	2815-01-419-0222	0FW39	12414398-003
2	1	5305-01-374-1087	19207	12414307-194
2	2	2510-01-390-1448	19207	12414290-001
2	3	5305-01-362-9796	19207	12414566-001
2	4	2510-01-389-9627	19207	12414289-001
2	5	5340-01-423-2345	19207	12420840-001
2	6	5306-01-369-8193	19207	12414307-078
2	7	5306-01-381-9941	19207	12414307-079
2	8	5310-01-369-3338	19207	12414308-021
2	9	2510-01-374-2429	19207	12414285

CROSS REFERENCE INDEXES

FIGURE AND ITEM NUMBER INDEX

FIGURE NO	ITEM NO	STOCK NUMBER	FSCM	PART NUMBER
	10	5340-01-382-5021	81860	26112
2	11	5306-01-379-5092	19207	12419221
2	12	5310-01-420-7615	19207	12419222
2	13	5306-01-330-8490	19207	12414307-037
2	14	5306-01-387-8001	19207	12414307-087
2	15	5310-01-369-3337	19207	12414308-018
2	16	5365-01-375-2172	19207	12414665
3	1	5306-01-360-1634	11083	8T4136
3	2	5310-01-352-2753	11083	8T4121
3	3	5340-01-360-1750	11083	4R9234
3	4	5340-01-440-6733	19207	12421149
3	5	5305-01-362-9795	19207	12414566-002
3	6	2510-01-365-8977	19207	12414287
3	7	5305-01-362-9796	19207	12414566-001
3	8	2590-01-363-7325	19207	12414286
3	9	5340-01-365-8143	0FW39	12414432
3	10	5305-01-299-4602	64678	000933 006058
3	11	5310-01-115-0762	19200	12524631-1
3	12	5340-00-809-1500	96906	MS21333-107
3	13	5310-01-342-2739	15526	DIN 934 ST M6
3	14	2510-01-364-5702	19207	12414401
3	15	5305-01-264-6360	15526	DIN933-M10X20-8 8-A4C
3	16	5340-01-360-1701	11083	4R9233
4	1	5365-01-360-1034	11083	8T3282
4	2	5305-01-360-9088	11083	8T0657
4	3	5305-01-360-1989	11083	8T5030
4	4	5330-00-613-6500	11083	1J9671
4	5	5365-01-035-4899	11083	9S8003
4	6	5340-00-410-6762	11083	2M6471
4	7	2815-01-434-5169	11083	115-4165
4	8	2815-01-360-5479	11083	9T6166
4	9	5330-01-360-7172	11083	4P6930
5	1	3120-01-350-6845	11083	1W8407
5	2		11083	100-4948
5	3	5340-00-410-6762	11083	2M6471
5	4	5340-00-007-6350	11083	3H5552
5	5	4730-01-064-3790	11083	9S8008
5	6	5330-00-944-8281	11083	3D2824
5	7	5306-01-360-1632	11083	8T0293
5	8	5310-00-362-7988	11083	6F7062
5	9	3130-01-360-7564	11083	7E2968
5	10	5310-01-095-4631	11083	5P8247
5	11	5306-01-360-1633	11083	9X8916
5	12		11083	9S8006
5	13	5330-00-939-0687	11083	2M9780
5	14	5305-01-360-1009	11083	6V3940
5	15	4710-01-361-0817	11083	4P5651
5	16	5315-01-360-6728	11083	7N5683
5	17	5315-01-188-1865	11083	6V3538
6	1	3120-01-360-5296	11083	7C6966
6	1	3120-01-360-5297	11083	7C6967

CROSS REFERENCE INDEXES

FIGURE AND ITEM NUMBER INDEX

FIGURE NO	ITEM NO	STOCK NUMBER	FSCM	PART NUMBER
6	1	3120-01-360-5294	11083	7C6969
6	1	3120-01-360-5295	11083	7C6970
6	1	3120-01-399-1541	11083	107-7602
6	2	3120-01-360-5300	11083	7C6972
6	2	3120-01-360-5299	11083	7C6974
6	2	3120-01-360-5956	11083	7C6975
6	2	3120-01-360-5957	11083	7C6971
6	2	3120-01-360-5293	11083	7W9417
6	3	3120-01-361-1157	11083	7C6964
6	3	3120-01-361-1159	11083	7C6962
6	3	3120-01-360-5291	11083	7W9414
6	3	3120-01-361-3151	11083	7C6965
6	3	3120-01-361-1158	11083	7C6961
6	4	2815-01-399-0833	11083	105-1725
6	5	5315-00-616-5525	96906	MS35756-9
6	6	3020-01-360-6390	11083	2W8147
6	7	5330-01-360-9023	11083	4R8831
6	8		11083	4R9999
6	9	5330-01-361-1456	11083	115-4109
7	1	3020-01-384-6236	11083	7W3773
7	2	3040-01-361-2508	11083	2W7381
7	3	5305-01-360-0999	11083	8T3666
7	4	3020-01-360-6543	11083	4R8832
7	5	2815-01-385-4719	11083	7C8444
7	6	2815-01-388-0665	11083	4R8939
7	7	5310-01-165-2482	11083	3V2431
7	8	5306-01-360-0932	11083	8T4186
7	9	5305-01-360-1001	11083	6V8336
7	10	5310-01-372-5685	81349	MIL-W-80342/4
7	11	5305-01-362-9797	19207	12414419-112
7	12	5310-01-363-0740	19207	12414473-014
7	13	3020-01-365-3053	19207	12420812
7	14	2920-01-363-2525	19207	12414377
7	15	5305-01-071-7162	15526	933-M16X50
7	16	5340-01-362-6229	19207	12414374
8	1	2815-01-361-2366	11083	9Y7451
8	2	5365-00-763-0120	11083	9S4185
8	3	5330-01-049-1292	11083	3J7354
8	4	5340-01-360-1691	11083	9S4182
8	5	5305-01-360-1996	11083	8T4196
8	6	5305-01-360-0952	11083	7X3347
8	7	5305-01-360-1011	11083	8T7547
8	8	5330-01-061-8003	11083	3N4087
8	9	5310-01-359-8806	11083	8T4224
8	10	5306-01-360-0927	11083	8T4189
8	11	5340-01-182-6728	11083	3N4088
8	12	3040-01-361-0760	73342	29503046
8	13	3020-01-361-5691	73342	29503042
8	14	3020-01-388-4633	73342	29503043
8	15	5365-01-360-1998	73342	29503045
8	16	5365-01-360-1998	73342	29503045
8	17	5365-01-360-2007	73342	29503797

CROSS REFERENCE INDEXES

FIGURE AND ITEM NUMBER INDEX

FIGURE NO	ITEM NO	STOCK NUMBER	FSCM	PART NUMBER
8	18	5305-01-157-1391	56161	10501611
8	19	2520-01-360-6311	73342	29503525
8	20	5305-01-360-2038	73342	11505232
8	21	5330-01-329-9093	97907	6776456
8	22	2815-01-430-3787	11083	126-5874
8	23	4730-01-022-6066	11083	1B5170
8	24	3040-01-424-5401	73342	29523709
8	25	5305-01-424-0075	73342	11515393
8	26		73342	29527691
8	27		73342	29527690
8	28	4320-01-423-7597	73342	29523128
8	29	5305-01-157-1391	56161	10501611
8	30		73342	29511624
8	31	5310-00-274-8041	27618	12084P11
8	32	5305-01-360-2038	73342	11505232
9	1	2815-01-361-2288	11083	4P1806
9	2	2815-01-361-3931	11083	4P1807
9	3	2815-01-432-0183	11083	107-7548
9	4	2815-01-361-6202	11083	6I4248
9	5	2815-01-360-6535	11083	2W9128
9	6	3120-01-360-5287	11083	2W0027
9	7	5306-01-205-5360	11083	9N3832
9	8	5310-00-155-5084	11083	9L7669
9	9	3120-01-360-5288	11083	7W9415
9	9	3120-01-360-5289	11083	7C6976
9	9	3120-01-360-5290	11083	7C6977
9	10	2815-01-361-2293	11083	7C3901
9	11	5325-01-360-0956	11083	7C0111
9	12	2815-01-361-2838	11083	1077791
10	1	5305-01-360-1990	11083	6V3822
10	2	3020-01-361-2409	11083	2W8476
10	3	3120-01-360-5285	11083	2W7566
10	4	3040-01-361-2505	11083	2W7565
10	5	5365-01-360-1035	11083	7W9737
10	6	3120-01-360-5286	11083	7W9930
10	7	3020-01-361-2410	11083	7W9740
10	8	5310-01-359-8807	11083	7W9738
10	9	5305-01-360-1991	11083	9X2305
11	1	5305-01-360-1009	11083	6V3940
11	2	3040-01-361-2509	11083	107-7694
11	3	2815-01-360-6339	11083	7W5426
11	4	5315-00-616-5525	96906	MS35756-9
11	5	3020-01-360-6389	11083	7W4070
11	6	3120-01-360-7529	11083	2W7213
11	7	3120-01-361-1161	11083	2W7211
12	1	5305-01-360-1000	11083	8T0100
12	2	5340-01-360-1210	11083	9Y6668
12	3	5305-01-360-1002	11083	6V3918
12	4	5310-00-432-4064	11083	9M1974
12	5	3040-01-361-0615	11083	7E6366
12	6	5310-01-098-0624	11083	5P8245
12	7	5305-01-360-1001	11083	6V8336

CROSS REFERENCE INDEXES

FIGURE AND ITEM NUMBER INDEX

FIGURE NO	ITEM NO	STOCK NUMBER	FSCM	PART NUMBER
12	8	5330-01-360-5929	11083	7W6552
12	9	5306-01-360-0931	11083	6V5217
12	10	5306-01-360-0929	11083	6V2317
12	11	5306-01-360-0928	11083	8T4137
12	12	5310-01-352-2753	11083	8T4121
12	13	2815-01-360-7980	11083	7W3871
12	14	2815-01-360-2429	11083	7W9395
12	15	5340-01-360-1221	11083	4W8339
12	16	5330-00-038-4327	11083	4F9653
12	17	5340-01-360-1885	11083	7W3872
12	18	5365-01-360-0975	11083	392281
12	19	5330-01-360-5928	11083	7W9699
12	20	5330-01-360-5927	11083	7W2426
12	21	5340-01-360-1220	11083	2W6544
12	22	5310-01-359-8806	11083	8T4224
12	23	5306-01-360-0927	11083	8T4189
12	24	5305-01-360-0990	11083	8T8442
12	25	2815-01-360-6352	11083	7W3989
12	26	2815-01-360-4450	11083	7E6794
12	27	3040-01-360-6280	11083	7W4339
12	28	5365-01-360-0974	11083	7W4069
12	29	4730-00-177-6166	11083	2D7325
12	30	4730-00-089-2515	11083	5M6213
12	31	5306-01-360-0930	11083	7X0818
12	32	5340-01-360-1691	11083	9S4182
12	33	5330-01-049-1292	11083	3J7354
12	34	4730-01-360-4242	11083	4P5153
12	35	5330-00-118-6559	11083	4F9029
13	1	5306-01-433-4753	11083	6V2315
13	2	5310-01-051-2360	11083	5P0537
13	3	2815-01-434-5171	11083	119-2960
13	4	5330-01-424-7905	11083	119-2940
14	1	2815-01-398-9928	11083	107-7722
14	2	2815-01-361-2394	11083	6I0924
14	3	5310-01-359-9329	11083	2Y5829
14	4	2815-01-362-5763	11083	9Y4973
14	5	2815-01-434-5168	11083	105-1776
14	6	5310-01-359-9328	11083	7W4117
14	7	2815-01-407-5718	11083	9Y8534
14	8	5325-01-360-0955	11083	7W3983
14	9	2815-01-360-4711	11083	9Y1582
14	10	2815-01-361-8317	11083	9Y4832
14	11	3040-01-361-2502	11083	4P7792
15	1	2815-01-361-8316	11083	1W2715
15	2	4810-01-360-2415	11083	7E7779
15	3	5360-01-359-7943	11083	7C4273
15	4		11083	119-3036
15	5	2815-01-361-8313	11083	9Y8848
15	6	5305-01-360-1007	11083	6V5223
15	7	5305-01-360-1010	11083	9X6005
15	8	5340-01-360-1793	11083	7E5984
15	9	2815-01-362-1159	11083	119-3061

CROSS REFERENCE INDEXES

FIGURE AND ITEM NUMBER INDEX

FIGURE NO	ITEM NO	STOCK NUMBER	FSCM	PART NUMBER
15	10	2815-01-388-4658	11083	6I1241
15	11	2815-01-360-5538	11083	4P8577
15	12	2815-01-424-6156	11083	105-1779
15	13	2815-01-361-8177	11083	7W8064
15	14	4820-01-360-4399	11083	1W2713
15	15	4820-01-360-4400	11083	7W8065
16	1	5305-01-360-1006	11083	6V5218
16	2	5310-00-432-4064	11083	9M1974
16	3	5330-00-105-0339	11083	1S7057
16	4	4710-01-361-2531	11083	4P2907
16	5	5330-00-579-6495	11976	A82777
16	6	4730-01-360-4146	11083	6V8724
16	7	5330-01-333-6444	11083	3J1907
16	8	5330-01-360-5937	11083	7C1160
16	9	2930-01-398-2009	11083	7W5903
16	10	5340-01-343-6678	11083	5P8196
16	11	5330-00-939-0687	11083	2M9780
16	12	5360-00-175-2701	11083	9L9188
16	13	4820-01-284-5435	11083	7C1493
16	14	2520-01-398-8321	11083	9Y9293
16	15	5305-01-360-1008	11083	8T0276
16	16	5330-00-948-6482	11083	3K0360
16	17	4730-01-168-1050	11083	307947
16	18	4730-01-706-8711	96906	MS51534A6-4
16	19	5330-01-360-5938	11083	7E9817
16	20	5330-00-914-5821	11083	8M4445
17	1	4320-01-360-9221	11083	119-2924
17	2	5310-01-360-0983	11083	6V5839
17	3	5305-01-360-1995	11083	6V5815
17	4	5306-01-387-9170	11083	6I3812
17	5		11083	146-7477
17	6	5330-00-973-8301	78640	8L2786
17	7	4730-01-360-4160	11083	7E2313
17	8	5330-01-333-6444	11083	3J1907
17	9	5365-01-036-0010	11083	9S8004
17	10		11083	115-4202
18	1	5330-01-385-7587	11083	3P1156
18	2	5305-01-360-1009	11083	6V3940
18	3	5310-00-432-4064	11083	9M1974
18	4	5330-01-360-7173	11083	7W5340
18	5	4710-01-371-1511	11083	9Y9854
18	6	5305-01-360-1994	11083	6V4248
18	7	5310-01-360-0983	11083	6V5839
18	8	4730-01-361-2266	11083	4W2232
19	1	4720-01-392-0316	19207	12418003
19	2	5365-01-378-2881	81343	4-070118C
19	3	5340-01-374-0422	19207	12418005
19	4	4820-01-374-2819	0FW39	12414643
20	1	4330-01-384-6317	11083	7W9028
20	2	4820-01-284-5435	11083	7C1493
20	3	5360-00-175-2701	11083	9L9188
20	4	5330-00-939-0687	11083	2M9780

CROSS REFERENCE INDEXES

FIGURE AND ITEM NUMBER INDEX

FIGURE NO	ITEM NO	STOCK NUMBER	FSCM	PART NUMBER
20	5	5340-01-343-6678	11083	5P8196
20	6	5310-00-432-4064	11083	9M1974
20	7	5306-01-360-0929	11083	6V2317
20	8	5305-01-360-1993	11083	6V5219
20	9	2940-00-029-0388	11083	1R0739
20	10	5330-00-291-9572	11083	5F9657
21	1	5310-00-432-4064	11083	9M1974
21	2	5305-01-360-1009	11083	6V3940
21	3	4710-01-361-0816	11083	4R9237
21	4	5330-01-360-5936	11083	7C0358
21	5	6680-01-433-1894	11083	109-2988
21	6	4710-01-361-2532	11083	5R8833
21	7	4730-00-908-3193	66295	WWD48-58H
21	8		19207	12418460-001
21	9	4710-01-423-4906	19207	12420425
21	9	4710-01-384-6214	19207	12414442
21	10	5310-01-155-1911	34914	990 3861
21	11	5310-01-369-3332	19207	12414315-006
21	12	5340-01-384-0746	19207	12414461
21	13	5340-01-383-9581	01943	EXP25359
21	14	3120-01-369-6733	19207	12417700
21	15	5305-01-441-3346	19207	12414419-097
21	15	5306-01-266-7779	81495	071 408 32
21	16	5340-01-148-6673	11083	1S2563
22	1	5330-00-828-8639	11083	4L9564
22	2	2815-01-298-5347	18265	BAS02-0072
22	3	5310-01-147-5110	11083	9N869
22	4	5305-01-360-1992	11083	6V3821
22	5	5340-01-165-5721	11083	9M2904
22	6	4720-01-361-2539	11083	7C0952
23	1	5305-01-360-1005	11083	5P8347
23	2	5310-00-432-4064	11083	9M1974
23	3	2815-01-360-2467	11083	7E9314
23	4	5330-00-948-6482	11083	3K0360
23	5	5365-01-031-8183	19207	11621436-3
23	6	5305-01-360-1007	11083	6V5223
23	7	5305-01-384-9164	11083	6V8213
23	8	5305-01-360-1006	11083	6V5218
23	9	5330-01-360-5933	11083	113-6250
23	10	5330-01-360-5934	11083	4P1624
23	11	5330-01-360-5932	11083	4P1623
23	12	5310-00-470-5567	11083	8M9024
23	13	5305-01-360-1000	11083	8T0100
23	14	4730-01-361-2265	11083	4P2901
23	15	5305-01-360-1008	11083	8T0276
23	16	2990-01-361-2372	11083	4P1847
24	1	5330-01-424-3523	11083	1136200
24	2	2815-01-361-6526	11083	100-6599
24	3	5307-01-360-0988	11083	8T7044
24	4	5305-01-360-1003	11083	8T5035
24	5	5325-01-360-0954	11083	6I3033
24	6	5325-01-360-0953	11083	6I3035

CROSS REFERENCE INDEXES

FIGURE AND ITEM NUMBER INDEX

FIGURE NO	ITEM NO	STOCK NUMBER	FSCM	PART NUMBER
25	1	2910-01-361-2368	11083	4P2995
25	2	5330-01-066-0673	11083	1P8116
25	3	5330-01-348-2720	11083	114-8718
25	4	5330-01-360-6012	11083	125-8274
25	5	5305-01-360-0990	11083	8T8442
25	6	5310-01-439-0845	11083	9X8267
26	1	2940-01-417-2755	18265	GSH001725
26	2	4730-01-081-6467	18265	P128160
26	3		19207	12421380
26	4		0FW39	12421379-001
				SB
26	5		18265	STB140202REV14
26	6	5315-01-370-7199	18265	P10-9281
26	7	2990-01-385-5730	18265	P10-9270
26	8	5330-01-370-0662	18265	P11-3550
26	9	4730-01-071-2859	81343	2-2 140138C
26	10	2940-01-393-0970	18265	P530245
26	11	5340-01-398-2818	18265	P530946
26	12	5340-01-369-3441	18265	P52-7751
26	13		0FW39	P539693
26	14	5340-01-371-0943	18265	P530288
26	15	5330-00-477-0338	18265	P01-6972
26	16	2940-01-361-2407	18265	P52-7750
26	17	5305-01-166-0613	56161	10503777
26	17	5305-01-389-1253	19207	12414419-109
26	18	5310-01-363-0740	19207	12414473-014
26	19	5305-01-006-2053	96906	MS51849-75
26	20	5310-12-196-5989	19207	12417975-005
26	21	2920-01-390-3590	59150	1675-013
26	22	4720-01-375-3594	59150	1775-822
26	23	4730-00-908-6294	75160	C16054
26	24	2940-01-442-7349	18265	P530414
26	25	4730-00-908-6294	75160	C16054
26	26	4730-00-908-9293	06481	T218758
26	27	4720-01-440-7367	18265	P5539
26	27	4720-01-439-5076	18265	P5540
26	28	5306-01-266-7779	81495	071 408 32
26	29	5310-01-155-1911	34914	990 3861
26	30	5310-12-162-2131	D8286	DIN128A-8FST
26	31	5310-01-160-2032	1FH08	DIN555M8
26	32	4720-01-363-2320	19207	12414502
26	33	4710-01-383-5064	19207	12414636
26	34	4730-00-908-3194	96906	MS35842-11
26	35		19207	12419827
26	36	5306-01-369-8191	19207	12414307-063
26	37	4730-00-909-8627	01276	FF9311-36
26	38	4720-01-K65-1431	18265	P535537
26	39	5340-01-372-5619	81860	25922
26	40	5306-01-377-0852	19207	12414307-050
26	41	5310-01-369-9522	19207	12414308-019
26	42	5310-01-381-9849	19207	12414308-020
26	42	5310-01-381-9849	19207	12414308-020

CROSS REFERENCE INDEXES

FIGURE AND ITEM NUMBER INDEX

FIGURE NO	ITEM NO	STOCK NUMBER	FSCM	PART NUMBER
26	43	5340-01-389-2419	19207	12420422
26	44	4710-01-370-5542	18265	P530516
26	45	5306-01-377-0771	19207	12414307-049
26	46	4720-01-439-5078	0TE27	AD1698-8-84-8
26	47	4720-01-439-5075	18265	P535538
26	48	5305-01-268-3656	15526	DIN933-M6X16-8.8 -A4C
26	49		18076	S630H-36
26	50	5310-01-384-0162	19207	12414560-014
26	51	5310-01-381-9819	19207	12414308-002
26	52	5340-01-440-7686	19207	12421150
26	53	5340-01-441-1014	0FW39	12420847
26	54	4710-01-439-9712	19207	12421153
27	1	5330-01-360-5940	11083	7C7431
27	2	4730-01-360-4179	11083	9X6620
27	3	2950-01-361-3182	11083	4R9147
27	4	5330-01-360-5935	11083	7W2398
27	5	4710-01-361-2530	11083	7C3760
27	6	5330-00-847-4351	11083	9M4849
27	7	5305-01-360-1000	11083	8T0100
27	8	5330-00-562-1073	11083	4F7391
27	9	4730-01-361-5683	11083	4P4014
27	10	5305-01-360-1009	11083	6V3940
27	11	5310-00-432-4064	11083	9M1974
27	12	5305-01-360-1703	11083	8T4200
27	13	5310-01-359-8806	11083	8T4224
27	14	2835-01-362-4442	11083	4P2949
28	1	2930-01-370-0240	0CVH3	485630-0001
28	2	2805-01-417-2057	19207	12420535
28	3	4730-01-329-9147	7Z588	CT 350L
28	4	4720-01-363-8971	49058	12414686
28	5	4710-01-370-1139	19207	12421784
28	6	4730-01-329-9151	7Z588	CT 250L
28	7	4720-01-370-2999	16632	STE1002
28	8	5306-01-330-8490	19207	12414307-037
28	9	4720-01-370-0263	0FW39	12414424
28	10	4710-01-447-2936	0FW39	12421188-001
28	11	5310-01-381-9830	19207	12414308-017
28	12	5340-01-426-7635	19207	12421179-001
28	13	4710-01-370-4818	19207	12378369-003
28	14	5340-01-430-2354	19207	12421172-001
28	15	5306-01-374-1078	19207	12414307-023
28	16	4730-00-842-7841	24617	444626
28	17	4730-01-207-5985	7Z588	CT-300L
28	18	4720-01-370-5417	19207	12417310-002
29	1	5330-00-339-6224	11083	5F7054
29	2	4720-01-361-0505	11083	7E5190
29	3	5330-01-049-1292	11083	3J7354
29	4	4730-01-360-9109	11083	6V8647
29	5	5330-00-855-8059	11083	4J5477
29	6	5305-01-360-1011	11083	8T7547
29	7	5310-00-432-4064	11083	9M1974

CROSS REFERENCE INDEXES

FIGURE AND ITEM NUMBER INDEX

FIGURE NO	ITEM NO	STOCK NUMBER	FSCM	PART NUMBER
29	8	5340-00-426-4803	11083	8M2772
29	9	4710-01-361-3984	11083	1077749
29	10	4730-01-360-9206	11083	6V8628
29	11	4710-01-361-2534	11083	7W0367
29	12	5330-01-333-6444	11083	3J1907
29	13	4730-01-360-4146	11083	6V8724
29	14	5330-00-579-6495	11976	A82777
29	15	4710-01-361-3983	11083	7W0183
29	16	5340-00-426-4794	11083	9S1350
29	17	5310-01-359-8806	11083	8T4224
29	18	5305-01-360-1703	11083	8T4200
29	19	4730-01-360-4197	11083	7X2459
29	20	5365-00-411-4584	11083	9S4191
29	21	4730-01-389-9628	0TE27	6405-6-4
29	22	4730-01-177-4734	81343	4 130109AC
29	23	4710-01-361-2533	11083	1154232
29	24	4730-01-411-7545	11083	6V9850
29	25	4730-00-143-3941	96906	MS51527A6
29	26	5330-01-104-1093	02697	3-906N552-90
29	27	4820-01-360-2394	11083	8T0151
29	28	5360-01-280-7446	11083	3N3252
29	29	4820-01-360-2395	11083	7E5189
29	30	5330-01-335-0042	11083	5P7813
29	31	5310-00-470-5567	11083	8M9024
29	32	5305-01-360-1704	11083	6V6317
29	33	4730-01-334-5710	81343	6-6 070120C
29	34	5330-00-804-5695	96906	MS28778-6
29	35	4720-01-363-2245	01276	2556-06-0272
30	1	5306-01-372-0786	19207	12414307-138
30	2	5340-01-371-9405	19207	12417640
30	3	5306-01-372-0787	19207	12414307-143
30	4	5306-01-390-1141	19207	12414307-150
30	5	5310-01-239-7188	64678	007349010003
30	6	5340-01-439-0843	01276	900729-001
30	7	5340-01-381-3940	19207	12417346
30	8	5325-00-074-3301	96906	MS21266-2N
30	9	5305-01-140-2490	05824	M10X1.5X30 DIN93 3 ST
30	10	5310-01-369-9522	19207	12414308-019
30	11	5306-01-389-0093	19207	12414307-092
30	12		0B8Y6	9604925-005
30	13	5330-01-429-3089	0B8Y6	9604792-001
30	14	5305-00-954-8153	96906	MS35215-60
30	15		0FW39	12378865-001
30	16	5340-01-393-0789	98624	A1393M
30	17	4730-00-833-4613	81343	6-6 070202BA
30	18	4720-01-372-4877	19207	12418124-002
30	19	4720-01-372-4876	19207	12418124-001
30	20		81349	M13444T1.250
30	21	4730-01-377-6820	0TE27	7207-86552
30	22	2910-01-372-1552	98624	SS5219
30	23	5340-01-383-2413	98624	OS5763

CROSS REFERENCE INDEXES

FIGURE AND ITEM NUMBER INDEX

FIGURE NO	ITEM NO	STOCK NUMBER	FSCM	PART NUMBER
30	24	5330-00-808-0794	96906	MS28778-8
30	25	4730-00-014-4027	79470	3152X8
30	26	4710-01-422-5575	98624	266AH
30	27	4820-01-393-4532	51377	A1386H
30	28	5310-01-369-6706	19207	12414308-025
30	29	5310-00-834-8732	96906	MS35691-33
30	30	2590-01-372-6500	98624	SS5756
30	31		19207	12414669-002X416
30	32		0FW39	12414669-001X235
31	1	2910-01-361-5154	11083	4R9036
31	2	5325-00-682-1762	96906	MS16633-1031
31	3	4820-01-430-3427	11083	7W7383
31	4	5330-01-333-6444	11083	3J1907
31	5		11083	7C5294
31	6	5306-01-411-5012	11083	8C6364
31	7	5340-01-408-8527	11083	4P4224
31	8	3040-01-413-4020	11083	7E0156
31	9		11083	7W5615
31	10	5330-00-498-2906	58312	4D9986-00
31	11		11083	4P3953
31	12	3040-01-429-7904	11083	7C8854
31	13	5305-01-360-1006	11083	6V5218
31	14	5310-00-432-4064	11083	9M1974
31	15	5340-01-360-1885	11083	7W3872
31	16	5330-00-865-0404	11083	6F6673
31	17	4730-01-360-2372	11083	9Y5295
31	18	5330-01-336-8776	11083	1T1068
31	19	5340-01-360-1725	11083	7C3839
31	20	4730-01-417-4887	11083	7E9898
31	21	5310-00-841-2576	96906	MS25440-4
31	22	5306-01-181-7849	11083	5C9553
31	23	5315-01-434-3300	11083	7E8445
31	24	3040-01-434-8708	11083	4P7596
31	25	5310-01-415-1606	11083	9X8256
31	26	5310-00-913-7020	11083	6V8187
31	27	5306-01-413-7704	11083	7X2537
31	28	5310-01-433-5837	11083	7X0579
31	29	5365-01-433-8407	11083	4P2987
31	30	3040-01-434-8709	11083	1158543
31	31	5330-01-360-5942	11083	7E0844
32	1	5305-01-360-1696	11083	6V5683
32	2	5340-01-438-3539	11083	102-7459
33	1	5330-01-360-5941	11083	7C1159
33	2	5365-00-411-4584	11083	9S4191
33	3	5330-01-333-6444	11083	3J1907
33	4	2910-01-388-5518	11083	4W5158
33	5	5310-00-432-4064	11083	9M1974
33	6	5305-01-360-1706	11083	6V9607
33	7	2910-01-363-3089	11083	7E9763
33	8	5305-01-360-1006	11083	6V5218
34	1	2910-01-361-8229	55752	445R-SS-01
34	2	5330-01-416-8898	55752	43506

CROSS REFERENCE INDEXES

FIGURE AND ITEM NUMBER INDEX

FIGURE NO	ITEM NO	STOCK NUMBER	FSCM	PART NUMBER
34	3	5340-01-416-9971	55752	RK11-1677
34	4		55752	RK22140
34	5	2910-01-360-6366	55752	R22146
34	6		55752	22333
34	7	2910-01-418-7593	55752	RK22141
34	8	5355-01-364-8643	55752	21104
34	9		81349	M13444T1.375X24
34	10	4730-00-278-2523	88907	B54-32780
34	11	5305-01-140-2490	05824	M10X1.5X30 DIN93 3 ST
34	12	5310-01-363-0740	19207	12414473-014
35	1	5306-01-374-1078	19207	12414307-023
35	2	5340-01-128-9558	19207	12277381
35	3	5310-01-100-5199	96906	MS35426-27
35	4	2910-00-646-9727	78280	LP-535
35	5	5306-01-384-3431	19207	12414307-024
35	6	5310-01-381-9830	19207	12414308-017
35	7	5310-01-442-1717	19207	12414560-021
35	8	4810-01-442-8695	78280	QS5-5CTP
35	9	4730-01-412-5193	78280	LP1698CT
35	10	5330-01-058-3788	61112	QS-1181
35	11		78280	LP-3239-914.5
35	12	4730-00-278-6242	81343	2-2-2 060401BA
35	13		78280	LP-3239-152.4
35	14	2910-01-190-4206	61112	QA-3-1TC
35	15	4730-01-389-9629	78280	QS-1428
35	16	5330-00-167-5173	81349	M83248-2-908
36	1	5340-01-423-1002	19207	12420562
36	2	5355-01-376-3674	0FW39	12417587
36	3	5307-01-388-0489	19207	12420084-003
36	4		19207	12420086-002
36	5	2530-01-384-0805	19207	12420085-002
36	6	2540-01-375-8121	0FW39	12417519
36	7	5305-01-268-3656	15526	DIN933-M6X16-8.8 -A4C
36	8	5310-01-374-4517	19207	12414559-021
36	9	2590-01-419-2991	0FW39	12420561
36	10	3040-01-375-8191	0FW39	12417461
36	11	5310-01-370-7447	19207	12414474-010
36	12	5306-01-424-0079	19207	12420558
36	13	3040-01-437-8112	0FW39	12420564
36	14		09455	CJM-1020
36	15	5325-00-405-5649	15526	8MMDIN6799
36	16	5340-01-269-1361	11862	15567924
36	17	5310-01-365-7236	19207	12414315-009
36	18	5310-01-363-0740	19207	12414473-014
36	19	5310-01-406-6326	19207	12417503
36	20	5330-01-407-0494	19207	12417872
36	21	5340-01-440-1540	19207	12420742
36	22	5305-01-268-3656	15526	DIN933-M6X16-8.8 -A4C
36	23	5305-01-178-7349	56161	10503805

CROSS REFERENCE INDEXES

FIGURE AND ITEM NUMBER INDEX

FIGURE NO	ITEM NO	STOCK NUMBER	FSCM	PART NUMBER
36	24	5306-01-360-1939	73342	9425115
36	25	5340-01-360-1066	73342	29500824
36	26	3040-01-362-1951	73342	29507766
36	27	5340-01-438-7231	19207	12420560
36	28	5310-01-115-0762	19200	12524631-1
36	29		24617	15961524
36	30		24617	15961525
36	31	5315-00-815-1405	96906	MS24665-151
36	32	3040-01-361-0758	73342	29503631
36	33	5310-01-370-7447	19207	12414474-010
36	34	5306-01-270-4217	81495	071 410 36
37	1	2990-01-387-9524	19207	12419232
37	2	2990-01-407-9264	19207	12419231
37	3	5310-01-160-2032	1FH08	DIN555M8
37	4	5310-01-155-1911	34914	990 3861
37	5		0FW39	12419803-001X
37	6		0FW39	12419803-002X
37	7	5305-01-394-9284	19207	12414419-106
38	1	5305-01-140-2490	05824	M10X1.5X30 DIN93 3 ST
38	2	5340-01-416-9967	19207	12419904-001
38	3	2990-01-372-5033	0FW39	12414610-004
38	4	5305-01-274-1264	15526	DIN933-M10X35-8. 8-A4C
38	5	5340-01-K65-1448	19207	12420692
38	6		18265	P215432
38	7	5310-01-369-9522	19207	12414308-019
38	8	5340-01-369-5039	19207	12418228-001
38	9	2990-01-363-2469	0FW39	12414572-004
38	10	5340-01-386-8163	18265	P20-6606
38	11	5310-01-208-4023	96906	MS20500-524
39	1	5306-01-369-8191	19207	12414307-063
39	1	5306-01-369-0765	19207	12414307-064
39	2	2990-01-375-8110	19207	12414630
39	3	5310-01-369-9522	19207	12414308-019
39	4	5305-01-140-2490	05824	M10X1.5X30 DIN93 3 ST
39	5	5340-01-369-5039	19207	12418228-001
39	6		0FW39	12420423-001
39	7	2990-01-363-2470	18265	EEH00-2226
39	8		0FW39	12414611-001
39	9	5340-01-386-8163	18265	P20-6606
39	10	5310-00-208-4023	96906	MS20500-524
40	1	5306-01-374-1078	19207	12414307-023
40	2	5310-01-381-9830	19207	12414308-017
40	3	5305-01-387-6177	19207	12414419-136
40	4	5310-01-369-3331	19207	12414315-012
40	5	2990-01-387-7205	0FW39	12414627-003
40	6	5325-01-440-2178	19207	12421402
40	7	5305-01-363-0703	19207	12414475-131
40	8	5365-01-436-8308	19207	12417948-004
40	9	2990-01-370-6089	0FW39	12414629-005

CROSS REFERENCE INDEXES

FIGURE AND ITEM NUMBER INDEX

FIGURE NO	ITEM NO	STOCK NUMBER	FSCM	PART NUMBER
40	10	5305-01-140-2490	05824	M10X1.5X30 DIN933 ST
40	11	5310-01-369-9522	19207	12414308-019
40	12	5310-01-365-7236	19207	12414315-009
40	13	2990-01-387-7201	19207	12419283
41	1		67049	12378882-004
41	2	4820-01-433-9857	67049	305546-901
41	3	4730-01-347-7342	81343	4-4 130139C
41	4	4730-01-434-1983	25281	065S9
41	5	4720-01-395-2232	19207	12418039
41	6	5310-01-369-6706	19207	12414308-025
41	7	5310-01-369-9522	19207	12414308-019
41	8	5306-01-372-3536	19207	12414307-140
41	9	5340-01-372-5693	19207	12378898
41	10	5306-01-369-6095	19207	12414307-035
41	11	5306-01-K65-4337	19207	12421697-003
41	12	5340-01-372-5695	19207	12417460
41	13	5306-01-369-8191	19207	12414307-063
41	14	2590-01-373-6358	0FW39	12378893
41	15	2590-01-390-1041	19207	12417632
41	16	4720-01-370-2999	16632	STE1002
41	17	4710-01-370-1140	19207	12420634-003
41	18		19207	12421379-004
41	19	5310-00-059-9266	96906	MS21046C5
41	20		81349	M13444T1.31X23
41	21	2930-01-370-2867	0FW39	12421190-001
41	22		0FW39	12419131-003
41	23	6680-01-438-6678	24346	CS22600-04
41	24		81343	16-16 430260B
41	24		81343	16-16 430360B
41	25	4730-00-913-0766	30327	KF08-04PS
41	26	4730-00-200-0531	93061	125HBL-4-4
41	27	4730-00-278-2523	88907	B54-32780
41	28	4720-01-370-2819	16632	FLX550002028800
41	29	4720-01-370-2820	16632	FLX5500-0015
41	30	4720-01-370-2821	16632	FLX5500-0013
41	31	4730-01-212-9613	7Z588	9420
41	32	5340-01-439-0821	19207	12420735
41	33	5306-01-369-0765	19207	12414307-064
41	34	5310-01-369-9522	19207	12414308-019
41	35	5340-01-423-0972	18076	S630H-20
41	36	5305-01-178-7349	56161	10503805
41	37		18076	S630H-32
41	38	5310-01-381-9819	19207	12414308-002
42	1	2815-01-395-2233	19207	12420065
42	2	2930-01-434-5219	0FW39	12420754
42	3	5305-01-178-7349	56161	10503805
42	4	5310-01-387-9787	19207	12417948-002
42	5	5310-01-342-2739	15526	DIN 934 ST M6
42	6	2815-01-412-0269	0FW39	12420066
42	7	2930-01-434-5220	19207	12420755
42	8		19207	12420420-3X660

CROSS REFERENCE INDEXES

FIGURE AND ITEM NUMBER INDEX

FIGURE NO	ITEM NO	STOCK NUMBER	FSCM	PART NUMBER
42	9	5325-00-923-9512	96906	MS21266-4N
43	1	4730-01-361-2267	11083	7C7911
43	2	5305-01-360-1009	11083	6V3940
43	3	5310-00-432-4064	11083	9M1974
43	4	5330-01-347-3206	11083	2W7212
43	5	6685-01-438-6660	11083	119-3075
43	6	5365-01-036-0010	11083	9S8004
43	7	5330-01-333-6444	11083	3J1907
43	8	5330-01-347-3207	11083	4W0549
43	9	4730-00-822-5609	96906	MS51527A8
43	10	5330-00-929-8171	02697	3-908N552-90
43	11	5305-01-360-1997	11083	6V5230
43	12	2930-01-361-2491	11083	5R9016
43	13	4730-01-436-2123	25281	050S9
43	14	4720-01-363-2253	16632	FLX550012001200
43	15	4710-01-362-5600	19207	12414435-003
43	16	5305-01-299-4602	64678	000933 006058
43	17	4720-01-439-5077	19207	12414553-002
43	18	5340-00-027-8737	96906	MS9025-23
43	19	5340-00-389-7004	19207	12419920
43	20	5310-01-115-0762	19200	12524631-1
43	21	5310-01-342-2739	15526	DIN 934 ST M6
43	22	4730-01-384-6270	81343	10-8-070320C
43	23	5330-00-808-0794	96906	MS28778-8
43	24	4710-01-363-2596	19207	12414555-001
43	25	4730-01-434-2163	25281	026S9
43	26	4720-01-370-2818	16632	FLX5500-0011
43	27	4710-01-363-2597	19207	12414449-001
43	28	4730-00-065-0521	19204	8442242
43	29	4730-00-809-9427	98660	AC1000-8-8CAD
43	30	4710-01-390-4471	19207	12414450-001
43	31	4710-01-362-5599	19207	12414463-001
43	32	4730-00-287-1875	88044	AN840-4
43	33	4730-00-873-0110	81343	6-2 140140C
43	34	4730-00-958-1475	81343	6-6 140424C
43	35	4730-01-420-5910	81343	8-6 130140C
43	36	4730-00-278-4311	96906	MS51500A10
43	37	4710-01-363-2594	19207	12414554-001
43	38	4720-01-370-1306	16632	FLX5500-0010
44	1	2930-01-361-6523	11083	5R9022
44	2	5330-00-948-6482	11083	3K0360
44	3	5365-01-031-8183	19207	11621436-3
44	4	5330-00-944-8281	11083	3D2824
44	5	4730-01-398-4688	11083	3R6790
44	6	4730-00-822-5609	96906	MS51527A8
44	7	4730-01-360-7750	11083	6V1722
44	8	5305-01-360-1708	11083	8T0644
44	9	5330-00-527-7939	96906	MS9021-225
44	10	5330-00-074-3768	11083	2M4453
44	11	5310-01-433-5836	11083	3E4352
44	12	5306-01-360-0929	11083	6V2317
44	13	3030-01-423-6537	11083	061-8384

CROSS REFERENCE INDEXES

FIGURE AND ITEM NUMBER INDEX

FIGURE NO	ITEM NO	STOCK NUMBER	FSCM	PART NUMBER
44	14	5310-01-163-9318	11083	4F3714
44	15	5305-01-360-1707	11083	6V5215
44	16	3020-01-433-8134	11083	115-4204
45	1	2930-01-384-1197	51377	4035-41393-74
45	1		0FW39	12421972
45	2	3040-01-363-8166	51377	4038-37641-01
45	3	5325-01-194-3076	51377	4082-37634-01
45	4	5365-01-362-7247	51377	4038-38806-01
45	5	2930-01-362-1098	51377	1090-08000-03
45	5	2930-01-331-6660	75418	1090-08000-01
45	6	5305-01-211-3097	96906	MS16998-61L
45	7	5310-00-407-9566	96906	MS35338-45
45	8	5310-00-038-9417	75418	3058-00843-06
45	9		75418	4040-41131-02
45	9		75418	4040-41131-01
45	10	5310-01-194-0481	51377	3029-01371-01
45	11	5310-01-189-8468	51377	3058-01264-02
45	12	2930-01-332-9887	75418	4043-41130-01
45	13	4730-00-900-3296	30327	48F1-8 1-4
45	14	5330-01-195-1500	51377	9002-00741-58
45	15	5330-01-393-5630	51377	9002-00491-68
45	16	5330-01-331-9283	75418	3018-01519-01
45	17	5330-01-393-5626	75418	3018-01507-01
45	18	5365-01-331-9503	75418	4001-40690-01
45	19	5360-01-392-9389	75418	4088-40615-01
45	20	3010-01-393-2740	75418	4079-41132-01
45	21	3040-01-332-5830	75418	4079-41133-01
45	22	5325-01-331-9372	75418	3038-01510-01
45	23	2530-01-246-4400	51377	4026-36900-01
45	24	5340-01-331-9610	75418	4073-38444-01
45	25	5310-00-397-4524	75418	3059-00870-03
45	26	5305-00-052-6456	96906	MS16996-10
45	27	5305-01-330-8496	75755	19M7662
46	1	6115-01-419-4033	76761	N1506-1
46	2	5310-01-348-8360	76761	N9416
46	3	5310-01-348-8384	76761	N9393
46	4	5305-01-032-4165	76761	N9005
46	5	5310-01-136-4888	76761	N9265
46	6	5340-01-396-3950	76761	N9493
46	7	3120-01-424-1525	76761	N9492
46	8	5325-01-136-7662	76761	N9260
46	9	5325-01-396-4320	76761	N9494
46	10	3130-01-396-8388	76761	N9486
46	11	5325-01-136-4880	76761	N9256
46	12	5310-01-165-1312	76761	N9099
46	13	5340-01-422-4327	76761	N7427
46	14	5305-00-059-3659	96906	MS51958-63
46	15	5310-01-032-4827	76761	N9018
46	16	5310-01-032-4169	76761	N9016
46	17	6115-01-423-0138	76761	N7431
46	18	5315-01-348-6880	76761	N9451
46	19	6105-01-423-0136	76761	N7429

CROSS REFERENCE INDEXES

FIGURE AND ITEM NUMBER INDEX

FIGURE NO	ITEM NO	STOCK NUMBER	FSCM	PART NUMBER
46	20	5950-01-424-4089	76761	N7428
46	21	2920-01-399-0794	76761	N7401
46	22	3120-01-424-1028	76761	N9545
46	23	3110-01-348-4867	76761	N9385
46	24	5306-01-430-8802	76761	N9495
46	25	5310-01-232-1362	76761	N9338
46	26	4140-01-422-2618	76761	N9558
46	27	5310-01-050-6565	76761	N9063
46	28	5310-01-402-5220	19207	11649930
46	29	4140-01-397-2228	76761	N9491
46	30	6110-01-420-1229	76761	N3030
46	31	5305-00-021-3620	76761	N9553
46	32	5310-01-348-8393	76761	N9459
46	33	5310-01-042-8391	13499	500-1114-003
46	34	5310-01-348-8398	76761	N9410
46	35	5920-01-422-3648	76761	N9555
46	36		76761	N9557
46	37	5310-01-348-8385	76761	N9455
46	38	5310-01-422-8575	76761	N9554
46	39	5310-01-232-1363	76761	N9062
46	40	5310-01-423-0880	76761	N9556
46	41	5306-01-430-8791	76761	N9498
46	42	5310-01-046-0186	76761	N9015
46	43	5310-01-350-4257	76761	N9467
46	44	5310-01-350-8549	76761	N9465
46	45	5305-01-389-8022	24995	09288
46	46	3020-01-439-6621	19207	12421165
46	47	5306-01-394-9295	19207	12417958-009
46	48	5310-01-167-4064	21969	A 13 DIN125-ST
46	49	5305-01-341-8926	15526	933-M8X20
46	50	5310-01-155-1911	34914	990 3861
46	51	5310-01-160-2032	1FH08	DIN555M8
46	52	5340-01-444-2639	19207	12414341-001
46	53	2590-01-443-2208	0FW39	12414306-001
46	54	5305-01-149-0867	05523	42051-14
46	55	5307-01-390-1878	19207	12414576-169
46	56	5310-01-369-3332	19207	12414315-006
46	57	5340-01-362-4582	19207	12414337
46	58	5310-01-375-0659	19207	12414473-016
46	59	5305-01-362-9796	19207	12414566-001
46	60	3030-00-844-4456	24161	9580
46	61	5310-01-369-6073	19207	12414308-007
47	1	2920-01-364-1598	16764	1993991
47	2	2920-01-364-1598	35510	M0017703MD
47	3	5310-01-120-6997	35510	Z0930-78423
47	4	5310-00-274-4546	35510	3249
47	5	6150-01-333-9318	35510	225087
47	6	5970-01-308-0374	35510	95770
47	7	5340-01-109-4609	35510	78494
47	8	5310-00-508-5439	35510	5955
47	9	5305-01-121-5475	35510	3966
47	10	9390-00-112-8047	35510	38406

CROSS REFERENCE INDEXES

FIGURE AND ITEM NUMBER INDEX

FIGURE NO	ITEM NO	STOCK NUMBER	FSCM	PART NUMBER
47	11	4730-00-044-4688	24617	444688
47	12	5340-01-127-5636	35510	57022
47	13	5305-00-984-6191	96906	MS35206-243
47	14	5977-00-758-9555	35510	M010071035
47	15	5330-00-838-6729	35510	74980
47	16	3120-00-089-2707	19207	5702711
47	17	2920-01-121-0168	35510	78433
47	18	5310-00-517-6564	35510	73450S
47	19	5310-01-112-1740	35510	75777
47	20		35510	M012225340
47	21	5310-00-775-5182	35510	2523
47	22	5305-00-068-0502	96906	MS90725-6
47	23	2920-00-728-2040	35510	M002071025
47	24	5310-01-106-9929	35510	2313
47	25	5310-00-775-5139	35510	2434
47	26		35510	78354
47	27	2920-01-196-7730	35510	95656
47	28	2530-01-154-7768	35510	95146
47	29	5310-01-158-9216	35510	77481
47	30	5305-00-177-5567	35510	73650
47	31	5315-01-113-0395	35510	73587
47	32	5330-00-579-6495	35510	Z053-074979
47	33		35510	225322S
47	34	4730-01-187-3645	35510	60263
47	35	5305-00-177-5568	35510	31757
47	36	5305-01-080-4755	35510	73503
47	37	2920-01-077-0911	35510	78138
47	38	5310-00-482-1999	35510	36900
47	39	3120-01-302-9301	35510	Z095077721
47	40	3110-01-302-9300	35510	73500
47	41	2920-01-147-2208	35510	79144
47	42	2520-01-187-3619	35510	97439
47	43	9390-01-204-7151	35510	99278
47	44	5330-01-079-6372	35510	97799
47	45	5305-00-461-5860	35510	73502
47	46		35510	M014225337
47	47	5330-00-020-0186	81349	083248/1-906
47	48		35510	75249
47	49	5310-01-112-1738	35510	78302
47	50	5306-01-382-5054	19207	12414307-065
47	51	5330-01-305-6550	11083	3K3257
48	1	5305-01-178-7349	56161	10503802
48	2	2920-01-361-5802	68505	SBC-4401E-1
48	3	5365-01-374-6928	19207	12417975-006
48	4	5310-01-342-2739	15526	DIN 934 ST M6
49	1	5945-01-360-5012	11083	3E0268
49	2	5310-00-559-0070	11083	9B7233
49	3	5310-01-297-1062	11083	6V8377
49	4	5330-00-933-3305	11083	4K1388
50	1	5930-00-307-8856	96906	MS51113-1
50	2	2510-01-372-1556	0FW39	12378442
50	2		0FW39	12378442-001

CROSS REFERENCE INDEXES

FIGURE AND ITEM NUMBER INDEX

FIGURE NO	ITEM NO	STOCK NUMBER	FSCM	PART NUMBER
50	3	5905-01-407-0035	13445	74601-01
50	4	5930-01-406-7217	21649	P3-90108
50	5	5930-01-292-6730	45152	1588570
50	6	5305-00-179-8946	96906	MS51849-66
50	7		56493	SP-610-B
50	8		32171	EM7175-6SS
50	9		32171	B-3926-1
50	10	5310-00-941-6019	96906	MS21083N08
50	11	6620-01-376-1613	32171	EM7175-3
50	12		32171	B-3926-1
50	13	5310-00-941-6019	96906	MS21083N08
50	14	6680-01-443-3284	32171	EM7175-11SS
50	15		32171	B-3926-1
50	16	5310-00-941-6019	96906	MS21083N08
50	17	6625-01-383-2558	19207	12378796
50	18		32171	B-3926-1
50	19	5310-00-941-6019	96906	MS21083N08
50	20	6620-01-376-3744	0FW39	12378798-002
50	21		32171	B-3926-1
50	22	5310-00-941-6019	96906	MS21083N08
50	23	6620-01-374-9934	32171	EM7175-4
50	24		32171	B-3926-1
50	25	5310-00-941-6019	96906	MS21083N08
50	26	5305-01-387-6195	19207	12414419-040
50	27	5310-01-384-1977	19207	12414473-009
50	28	5310-01-384-7280	84256	ALS3-470-2.0
50	29		82484	E-003-023
50	30	6210-01-345-6315	82484	E-013-001
50	31	5930-01-381-7489	19207	12378620-002
50	32	5930-01-372-2262	19207	12378618-007
50	33		82484	E-003-020
50	34	6220-01-355-0001	82484	E-013-002
50	35	5930-01-381-7489	19207	12378620-002
50	36	5930-01-372-2263	19207	12378618-004
50	37		82484	E-003-022
50	38	6220-01-355-0001	82484	E-013-002
50	39	5930-01-381-7489	19207	12378620-002
50	40	5930-01-372-2264	19207	12378618-006
50	41		82484	E-003-017
50	42	6220-01-355-0001	82484	E-013-002
50	43	5930-01-372-5385	19207	12378620-001
50	44	6210-01-417-7033	82484	59L.412
50	45		82484	E-003-055
50	46	6210-01-345-6315	82484	E-013-001
50	47	5930-01-372-5385	19207	12378620-001
50	48	7690-01-433-1895	19207	12378618-023
50	49		82484	E-003-021
50	50	6220-01-355-0001	82484	E-013-002
50	51	5930-01-381-7489	19207	12378620-002
50	52	5930-01-372-2261	19207	12378618-005
50	53	5310-01-373-0748	84256	ALS3-470-3.3
50	54	2510-01-375-3800	07479	AMI5001

CROSS REFERENCE INDEXES

FIGURE AND ITEM NUMBER INDEX

FIGURE NO	ITEM NO	STOCK NUMBER	FSCM	PART NUMBER
50	55	6240-00-270-6824	71744	CM7-7373
50	56	6240-00-499-6278	71744	CM7376
50	57	5305-01-372-1266	19207	12414419-042
50	58	6680-01-439-2380	32171	EM7175-12
50	58	6680-01-382-8299	32171	EM7175-9
50	59		32171	A-3307-4
50	60	5310-00-941-6019	96906	MS21083N08
50	61	6680-01-365-8024	32171	EM7175-8
50	62		32171	A-3307-4
50	63	5310-00-941-6019	96906	MS21083N08
51	1	2510-01-385-8887	19207	12378453
51	2	5305-01-382-4111	19207	12414419-054
51	3	5325-00-074-3301	96906	MS21266-2N
51	4	2510-01-383-2372	19207	12378452
51	5	5305-01-386-7845	19207	12414419-039
51	6	5930-01-292-6730	45152	1588570
51	7		82484	E-003-027
51	8	5930-01-K64-6314	19207	12378618-011
51	9	5930-01-381-7489	19207	12378620-002
51	10	6220-01-355-0001	82484	E-013-002
51	11		82484	E-003-025
51	12	5930-01-K64-0241	19207	12378618-009
51	13	5930-01-381-7489	19207	12378620-002
51	14	6210-01-345-6315	82484	E-013-001
51	15		82484	E-003-035
51	16	5895-01-443-1949	82484	59L.487
51	17	5930-01-344-7571	45152	1913570
51	18	6210-01-345-6315	82484	E-013-001
51	19		82484	E-003-024
51	20	5895-01-443-0848	0FW39	12378618-008
51	21	5930-01-381-7489	19207	12378620-002
51	22	6210-01-345-6315	82484	E-013-001
52	1	6150-01-421-3552	0FW39	12420877
52	2	5935-01-351-1892	82484	596289
52	3	5940-01-353-6476	00779	60253-2
52	4	5935-01-351-4732	82484	913 328
52	5	5940-00-874-9033	00779	41274
52	6	9905-00-752-4649	81349	M43436/1-1
52	7	9905-00-841-4445	81349	M43436/1-2
52	8	5315-01-156-6314	71468	110238-0195
52	9	5935-01-154-6233	19207	12258940-4
52	10	5999-01-150-8808	11083	7N7779
52	11	5935-01-375-0563	19207	12414260-002
52	12	5935-01-152-2677	11083	9G3695
52	13	9905-00-893-3570	81349	M43436/1-3
52	14	5999-01-385-8325	71468	110-238-0446
52	15	5940-01-082-3321	00779	3-350820-2
52	16	5940-00-113-8179	96906	MS25036-107
52	17	5935-01-023-4871	36378	1003292-07
52	18	5999-01-153-9432	04071	R354273-11
52	19	5935-01-391-3153	19207	12420315
52	20	5940-01-387-4708	0FW39	12420316

CROSS REFERENCE INDEXES

FIGURE AND ITEM NUMBER INDEX

FIGURE NO	ITEM NO	STOCK NUMBER	FSCM	PART NUMBER
52	21	5940-00-143-4780	96906	MS25036-108
52	22	5999-01-195-0605	09922	SM16M-1TK6
52	23	5935-01-072-3924	09922	SMS36P-1
52	24	5935-01-013-9680	09922	SMS12R-1
52	25	5999-01-195-0606	09922	SC16M-1TK6
52	26	5999-01-340-7698	09922	SC14M-1TK6
52	27	5935-01-149-5165	11083	7N9738
52	28	5935-01-377-1136	19207	12419947
52	29	5935-01-323-6812	14933	87096-012
52	30	5999-01-178-4336	00779	350550-6
52	31	5940-01-407-5587	00779	350923-6
52	32	5935-01-323-8570	037Z3	87097-012
52	33	5999-01-420-7757	19207	12420915-003
52	34	5935-01-293-5988	03956	1805607-40
52	35	5935-01-323-8568	58536	A-A-55464-07
52	36	5940-00-143-4794	96906	MS25036-112
52	37		09922	SMS18R-1
52	38	5935-01-222-2700	09922	SMS18P-1
52	39	5999-01-327-6598	09922	SM14M-1TK6
52	40	5935-01-324-0563	14933	87097-006
52	41	5935-00-115-2306	96906	MS27142-3
52	42	5940-01-366-1563	77060	12048074
52	43	5935-01-365-1035	77060	12059168
52	44	5935-01-376-1385	19207	12417678
52	45	5935-01-323-6818	58535	A-A-55463-3
52	46	5935-01-336-6408	77060	1203 4398
52	47	5940-01-370-5059	77060	12103881
52	48	5999-01-388-6493	09769	350922-6
52	49	5935-01-383-0583	71468	CA3108E16-10S-F8 0
52	50	5305-00-054-6682	96906	MS51957-55
52	51	2920-01-388-5637	11873	10613-64004
52	52	5940-00-926-0085	74025	10476-103
52	53		65664	SPHS-224-9
52	54		65664	SPHS-274-9
52	55	5310-00-763-3413	96906	MS15795-847
52	56	5310-00-933-8119	96906	MS35338-137
52	57	5310-00-934-9759	96906	MS35649-284
52	58	5940-01-420-7315	0FW39	12420555
52	59	5940-00-945-2082	00779	42844-1
52	60	5310-00-934-9747	96906	MS35649-262
52	61	5310-00-209-0788	96906	MS35335-30
52	62	2920-01-388-5639	11873	15195
52	63	6110-01-420-7839	19207	12417650
52	64	5305-00-719-3997	96906	MS35307-303
52	65	5310-01-274-3255	96906	MS27183-52
52	66	5305-01-334-6785	96906	MS51492-03
52	67	5935-01-388-7318	19207	12414262
52	68	6110-01-420-7840	2E480	100760
52	69	5310-00-527-3634	96906	MS35335-61
52	70	5310-00-250-9477	96906	MS35649-2254
52	71	5925-01-422-4746	19207	12420937-006

CROSS REFERENCE INDEXES

FIGURE AND ITEM NUMBER INDEX

FIGURE NO	ITEM NO	STOCK NUMBER	FSCM	PART NUMBER
52	72	5925-01-K64-0349	19207	12420937-003
52	73	5925-01-422-4743	19207	12420937-004
52	74	5925-01-422-4747	19207	12420937-005
52	75	5925-01-422-4745	19207	12420937-002
52	76	5925-01-422-4748	19207	12420938-004
52	77	5945-01-360-3099	19207	12414270-001
52	78	5961-01-375-0478	19207	12418342
52	79	5945-01-382-8214	77342	VF4-15F11-S05
52	80	5945-01-360-6118	19207	12414270-002
52	81	5945-01-382-8925	77342	VF4-15H11-S05
52	82	5940-00-143-4777	96906	MS25036-157
52	83	5305-00-207-8253	96906	MS35307-308
52	84	5940-00-113-8183	96906	MS25036-113
52	85	5940-00-283-5281	96906	MS25036-109
52	86	5310-00-184-9562	96906	MS35335-62
52	87	5306-00-543-4405	96906	MS35307-334
52	88	5999-01-374-6031	19207	12419927-002
52	89	5970-01-375-7086	2E480	75588
52	90	5999-01-374-5638	19207	12419927-003
52	91	5970-01-375-7084	2E480	75572
52	92	5340-01-376-0541	2E480	59056
52	93	5340-01-376-0542	2E480	59099
52	94	5935-01-421-9768	2E480	59158
52	95	5940-01-374-8361	19207	12419928-002
52	96	5940-01-374-8363	2E480	30521
52	97	5940-01-374-9839	2E480	23433
52	98	5940-01-374-9838	19207	12419928-006
52	99	5940-01-376-1907	19207	12419928-008
52	100	5305-01-184-1937	15526	933-M6X12
52	101	5310-12-196-5989	D8286	DIN9021-5,3-100H V-C-B3B
52	102	5925-01-422-4743	19207	12420937-004
53	1		0FW39	12421781
53	2	5935-01-351-1892	82484	596289
53	3	5940-01-353-6476	00779	60253-2
53	4	5935-01-351-4732	82484	913 328
53	5	5940-00-874-9033	00779	41274
53	6	9905-00-752-4649	81349	M43436/1-1
53	7	9905-00-841-4445	81349	M43436/1-2
53	8	5315-01-156-6314	71468	110238-0195
53	9	5935-01-154-6233	19207	12258940-4
53	10	5999-01-150-8808	11083	7N7779
53	11	5935-01-375-0563	19207	12414260-002
53	12	5935-01-152-2677	11083	9G3695
53	13	9905-00-893-3570	81349	M43436/1-3
53	14	5999-01-385-8325	71468	110-238-0446
53	15	5940-01-082-3321	00779	3-350820-2
53	16	5940-00-113-8179	96906	MS25036-107
53	17	5935-01-148-4523	71468	031-0560-161
53	18		19207	12421842
53	19		19207	12421839
53	20		0FW39	12421836

CROSS REFERENCE INDEXES

FIGURE AND ITEM NUMBER INDEX

FIGURE NO	ITEM NO	STOCK NUMBER	FSCM	PART NUMBER
53	21		19207	12421841
53	22		19207	12421840
53	23	5935-01-391-3153	19207	12420315
53	24	5940-01-387-4708	0FW39	12420316
53	25	5940-00-143-4780	96906	MS25036-108
53	26	5999-01-195-0605	09922	SM16M-1TK6
53	27	5935-01-072-3924	09922	SMS36P-1
53	28	5935-01-013-9680	09922	SMS12R-1
53	29	5999-01-195-0606	09922	SC16M-1TK6
53	30	5999-01-340-7698	09922	SC14M-1TK6
53	31	5935-01-149-5165	11083	7N9738
53	32	5935-01-377-1136	19207	12419947
53	33	5935-01-323-6812	14933	87096-012
53	34	5999-01-178-4336	00779	350550-6
53	35	5940-01-407-5587	00779	350923-6
53	36	5935-01-323-8570	037Z3	87096-012
53	37	5999-01-420-7757	19207	12420915-003
53	38	5935-01-293-5988	03956	1805607-40
53	39	5935-01-323-8568	58536	A-A-55464-07
53	40	5940-00-143-4794	96906	MS25036-112
53	41		19207	12421845
53	42		19207	12421844
53	43		19207	12421847
53	44		19207	12421846
53	45	5935-01-174-1235	11139	114017
53	46		09922	SMS18R-1
53	47	5935-01-222-2700	09922	SMS18P-1
53	48	5999-01-327-6598	09922	SM14M-1TK6
53	49	5935-01-324-0563	14933	87097-006
53	50	5940-00-113-8184	96906	MS25036-150
53	51	5935-00-115-2306	96906	MS27142-3
53	52	5940-01-366-1563	77060	12048074
53	53	5935-01-365-1035	77060	12059168
53	54	5935-01-376-1385	19207	12417678
53	55	5935-01-323-6818	58536	A-A-55463-03
53	56	5999-01-388-6493	09769	350922-6
53	57	5935-01-383-0583	71468	CA3108E16-10S-F8 0
53	58		0FW39	12421838
53	59		0FW39	12421834
53	60		19207	12421832-002
53	61		19207	12421837
53	62		19207	12421833
53	63		19207	12421832-001
53	64	2920-01-388-5637	11873	10613-64004
53	65	5940-00-926-0085	74025	10476-103
53	66		65664	SPHS-224-9
53	67		65664	SPHS-274-9
53	68	5310-00-763-3413	96906	MS15795-847
53	69	5310-00-933-8119	96906	MS35338-137
53	70	5310-00-934-9759	96906	MS35649-284
53	71	5940-01-420-7315	0FW39	12420555

CROSS REFERENCE INDEXES

FIGURE AND ITEM NUMBER INDEX

FIGURE NO	ITEM NO	STOCK NUMBER	FSCM	PART NUMBER
53	72	5940-00-945-2082	00779	42844-1
53	73	5940-00-436-1632	56501	RA257
53	74	5310-00-934-9747	96906	MS35649-262
53	75	5310-00-209-0788	96906	MS35335-30
53	76	2920-01-388-5639	11873	15195
53	77	6110-01-420-7839	19207	12417650
53	78	5305-00-719-3997	96906	MS35307-303
53	79	5310-01-274-3255	96906	MS27183-52
53	80	5305-01-334-6785	96906	MS51492-03
53	81	6110-01-420-7840	2E480	100760
53	82	5310-00-527-3634	96906	MS35335-61
53	83	5310-00-250-9477	96906	MS35649-2254
53	84	5935-01-388-7318	19207	12414262
53	85	5305-00-054-6682	96906	MS51957-55
53	86	5925-01-422-4746	19207	12420937-006
53	87	5925-01-K64-0349	19207	12420937-003
53	88	5925-01-422-4743	19207	12420937-004
53	89	5925-01-422-4747	19207	12420937-005
53	90	5925-01-422-4745	19207	12420937-002
53	91	5925-01-422-4748	19207	12420938-004
53	92	5945-01-360-3099	19207	12414270-001
53	93	5961-01-375-0478	19207	12418342
53	94	5945-01-382-8925	77342	VF4-15H11-S05
53	95	5945-01-360-6118	19207	12414270-002
53	96	5945-01-382-8214	77342	VF4-15F11-S05
53	97	5940-00-143-4777	96906	MS25036-157
53	98	5305-00-207-8253	96906	MS35307-308
53	99	5940-00-113-8183	96906	MS25036-113
53	100	5940-00-283-5281	96906	MS25036-109
53	101	5310-00-184-9562	96906	MS35335-62
53	102	5306-00-543-4405	96906	MS35307-334
53	103	5999-01-374-6031	19207	12419927-002
53	104	5940-01-374-8362	0FW39	12419928-001
53	105	5970-01-375-7086	2E480	75588
53	106	5999-01-374-5638	19207	12419927-003
53	107	5970-01-375-7084	2E480	75572
53	108	5340-01-376-0541	2E480	59056
53	109	5340-01-376-0542	2E480	59099
53	110	5935-01-421-9768	2E480	59158
53	111	5940-01-374-8361	19207	12419928-002
53	112	5940-01-374-8363	2E480	30521
53	113	5940-01-374-9839	2E480	23433
53	114	5940-01-374-9838	19207	12419928-006
53	115	5940-01-376-1907	19207	12419928-008
54	1	6220-01-376-3676	82484	E-003-036
54	2	5305-01-202-6841	31550	511357-46
54	3		82484	288.528
54	4	5305-01-384-3457	80204	B1831DH040016N
54	5		82484	288.457
55	1	5305-01-184-1937	15526	933-M6X12
55	2	5310-01-115-0762	19200	12524631-1
55	3	5945-01-383-8377	32498	1000B-1

CROSS REFERENCE INDEXES

FIGURE AND ITEM NUMBER INDEX

FIGURE NO	ITEM NO	STOCK NUMBER	FSCM	PART NUMBER
56	1	5305-01-382-4111	19207	12414419-054
56	2	5305-01-387-2156	19207	12414419-055
56	3	5340-01-384-3471	19207	12417379
56	4	4730-01-386-6634	81343	2-130109NS
56	5	4810-01-375-3510	19207	12417630
57	1	5945-01-383-5900	1CW22	95505
57	2	5905-01-422-9203	19207	12421174
57	3	5310-01-115-0762	19200	12524631-1
57	4	5305-01-268-3656	15526	DIN933-M6X16-8.8 -A4C
57	5	2920-01-375-1483	52304	673204
57	6	5365-01-374-6928	19207	12417975-006
57	7	5310-01-370-7447	19207	12414474-010
57	8	5340-01-385-2003	19207	12420264
57	9	6110-01-376-2260	19207	12378784
57	10	5305-01-384-3487	19207	12414310-044
58	1	5945-01-423-5549	55156	2111B
58	2	5310-01-160-2032	1FH08	DIN555M8
58	3	5310-00-637-9541	96906	MS35338-46
58	4	5940-01-422-3593	19207	12421266
58	5	5340-01-426-4418	19207	12421186-003
58	6	5305-01-375-2856	19207	12414419-058
58	7	5310-01-421-9556	19207	12414560-011
58	8	5310-01-374-1382	19207	12414315-003
58	9	5310-01-381-9819	19207	12414308-002
58	10	5305-01-299-4602	64678	000933 006058
58	11	6625-01-169-2437	19207	12258937-1
58	12	5310-00-184-8971	96906	MS35338-103
58	13	5305-00-569-8846	19207	7365486
58	14	5305-00-206-2508	96906	MS35215-53
58	15	5310-00-261-8278	96906	MS35338-100
58	16	5310-00-045-5207	96906	MS15795-908
59	1	5310-00-768-0319	96906	MS51968-2
59	2	6220-01-363-8877	5A910	ACC-6134
59	3	5935-00-807-4109	19207	8741492
59	4	5325-00-088-6147	19207	8741442
59	5	5340-00-182-3726	19207	8741441
59	6	5310-00-463-0268	19207	5310615
59	7	5310-00-582-5965	96906	MS35338-44
59	8	5310-00-768-0319	96906	MS51968-2
59	9	5305-00-832-5743	19207	8741437
59	10	5325-00-832-5650	19207	8741446
59	11	6240-01-420-8320	45152	2HE692
59	12	5305-00-353-0969	19207	7538146
59	13	6220-00-998-6142	19207	8741447
59	14	6220-00-443-0589	19207	8741461
59	15	5310-00-241-6921	19207	8741435
60	1	5310-01-374-4515	19207	12414570-013
60	2	5305-01-356-9468	44940	800-2010
60	3	6220-00-134-9098	96906	MS52125-1
60	4	6220-01-067-4717	19207	11639520
60	5	5935-00-572-9180	19207	8338566

CROSS REFERENCE INDEXES

FIGURE AND ITEM NUMBER INDEX

FIGURE NO	ITEM NO	STOCK NUMBER	FSCM	PART NUMBER
60	6	5310-00-833-8567	19207	8338567
60	7	5999-00-057-2929	96906	MS27148-2
60	8	6220-01-293-2627	19207	12360870-1
60	9	5330-00-462-0907	19207	11639519-2
60	10	6220-01-387-4250	19207	12360850-2
60	11	6240-00-617-0991	58536	A52463-2-13
60	12	6240-00-143-3159	81348	W-L-00111/66
60	13	6220-00-179-4324	19207	11639535
60	14	5305-00-984-6210	96906	MS35206-263
60	15	6220-00-346-8943	19207	7526015
60	16	5305-01-367-9250	19207	7972328-1
60	17	6220-01-319-5509	19207	12357897
60	18	6220-01-210-3225	19207	11639538-1
60	19	6695-01-326-4706	19207	12357896
60	20	6220-01-108-5105	19207	11639537
61	1	5310-01-384-7280	84256	ALS3-470-2.0
61	2		0FW39	12421469
61	3	6220-01-383-0792	0FW39	12417654-003
61	4	5310-00-934-9761	96906	MS35649-264
61	5	5310-00-209-1366	96906	MS35335-58
61	6	5305-00-984-4993	96906	MS35206-233
61	7	6240-00-155-8717	81348	W-L-00111/60
61	8	5305-00-984-6208	96906	MS35206-261
61	9	6220-00-299-7425	96906	MS35421-1
61	10	5305-01-372-1266	19207	12414419-042
62	1	5310-01-374-1381	19207	12414315-002
62	2	6220-01-375-3532	0FW39	12417654-004
62	3	5310-00-934-9761	96906	MS35649-264
62	4	5310-00-209-1366	96906	MS35335-58
62	5	5305-00-984-4993	96906	MS35206-233
62	6	6240-00-155-8717	81348	W-L-00111/60
62	7	5305-00-984-6208	96906	MS35206-261
62	8	6220-00-299-7426	96906	MS35421-2
62	9	5305-01-387-3059	19207	12414419-045
63	1	5310-00-637-9541	96906	MS35338-46
63	2	5305-00-115-9526	80204	B182BH038C075D
63	3	5305-01-362-9797	19207	12414419-112
63	4	5310-01-374-4516	19207	12414570-021
63	5	5340-01-374-0416	19207	12419187
63	6	5310-01-365-7236	19207	12414315-009
63	7	6220-01-375-3530	5A910	AC12901
63	8	5935-00-572-9180	19207	8338566
63	9	5310-00-833-8567	19207	8338567
63	10	6240-00-617-0991	58536	A52463-2-13
63	11	6240-00-014-2454	58536	A52463-2-13
63	12	5330-00-297-7106	19207	7320658
63	13	6220-01-375-3536	5A910	AC-19202
63	14	5340-00-732-0642	19207	7320642
63	15	5305-00-737-5694	19207	7320641
64	1	6220-01-364-1671	19207	12360910-2
64	2	6220-01-411-3584	34623	12360912
64	3	5330-01-189-6351	81349	M25988/1-246

CROSS REFERENCE INDEXES

FIGURE AND ITEM NUMBER INDEX

FIGURE NO	ITEM NO	STOCK NUMBER	FSCM	PART NUMBER
64	4		19207	12360840-2
64	5		19207	12360911
64	6	5310-01-100-2067	19207	11668979
64	7	5310-00-350-2655	56442	616G4
64	8	5310-00-637-9541	96906	MS35338-46
64	9	5310-00-732-0558	96906	MS51967-8
64	10	5306-01-083-5536	19207	12287561-1
65	1	5305-00-115-9526	80204	B1821BH038C075D
65	2	5310-00-637-9541	96906	MS35338-46
65	3	6220-01-343-7564	96906	MS52126-1
65	4	6240-00-143-3159	81348	W-L-00111/66
65	5	6240-00-617-0991	58536	A52463-2-13
65	6	5330-00-463-0200	19207	11639519-1
65	7	6220-00-179-4325	19207	11639546
65	8	6220-01-319-5509	19207	12357897
65	9	6220-01-354-5261	5A910	11639538-2
65	10	6695-01-326-4706	19207	12357896
65	11	5305-01-367-9250	19207	7972328-1
65	12	5305-00-984-6210	96906	MS35206-263
65	13	6220-00-346-8943	19207	7526015
65	14	5999-00-057-2929	96906	MS27148-2
65	15	5310-00-833-8567	19207	8338567
65	16	5935-00-572-9180	19207	8338566
65	17	6220-01-354-1221	5A910	12360865-1
66	1	5930-01-423-6887	28022	101-01156-03
66	2	6685-01-419-2990	57733	506BA
66	3	2990-01-393-7761	51377	1002-07950-32
66	4	2990-01-439-3058	85814	TM-9A-230R-CANNO
66	5	6620-01-419-2992	57733	506AZ
66	6	5930-01-384-5419	85814	NSM-18-12F-CANNO
				NSM-18-12F-CANN
66	7	5905-01-407-0037	19207	12414556
66	8	6695-01-361-6056	73342	29509637
66	9	5330-01-360-6017	73342	29503383
66	10	5340-01-360-1033	73342	29503843
66	11	5305-01-158-2041	56161	10524332
66	12	6695-01-361-6055	73342	29505601
66	13	5305-01-159-0065	56161	10501759
67	1	2530-01-372-4988	59197	X57-360.367
67	2	5310-01-374-1381	19207	12414315-002
67	3	5310-01-110-7933	81349	D70336/1-20
67	4	4730-01-377-7523	0TE27	PM0616
68	1	6350-01-378-0973	19207	12417877
68	2	2590-00-683-0598	96906	MS51074-1
68	3	5305-01-178-7349	56161	10503805
68	4	5310-01-388-2043	19207	12414570-015
68	5	5305-01-341-8926	15526	933-M8X20
68	6	5310-01-376-5302	19207	12417975-008
69	1	6160-01-433-4985	19207	12420854
69	2	5340-01-442-9165	19207	12420087
69	3	5310-01-381-9901	19207	12412478-04
69	4	5310-01-374-6990	19207	12414473-010

CROSS REFERENCE INDEXES

FIGURE AND ITEM NUMBER INDEX

FIGURE NO	ITEM NO	STOCK NUMBER	FSCM	PART NUMBER
69	5	5305-01-006-2052	96906	MS51849-65
69	6	5310-01-435-1736	1T176	16998
69	7	5310-00-045-5213	96906	MS15795-913
69	8	5310-00-184-8971	96906	MS35338-103
69	9	5310-00-903-3994	96906	MS51969-3
69	10	6140-01-421-8220	19207	12420907
69	11	6140-01-421-8216	19207	12420894
69	12	6140-01-421-8339	33609	6015
69	13	6140-01-421-8207	19207	12420895
69	14		19207	12420174
69	15	5306-01-386-3966	19207	12414307-145
69	16	5310-01-369-6706	19207	12414308-025
69	17	5310-01-342-2739	15526	DIN 934 ST M6
69	18	5310-12-319-0394	19207	12414560-013
69	19	5305-01-178-7349	56161	10503805
69	20	6150-01-317-5853	19207	12342303
69	21	5305-00-984-6192	96906	MS35206-244
69	22	4020-01-092-0331	19207	12269868
69	23	5340-01-315-7223	19207	12342306
69	24	5306-01-389-0076	19207	12414307-151
69	25	6140-01-051-4900	96906	MS52149-2
69	26	6140-01-421-8203	19207	12420896
69	27	5940-00-738-6272	19207	10942521
69	28	5310-00-913-8881	96906	MS51971-3
69	29	5310-00-802-4701	96906	MS15795-813
69	30		19207	12420567
69	31	5310-00-984-7042	96909	MS35338-141
69	32	6160-01-433-5002	24995	11500137
69	33	5305-01-299-4602	64678	000933 006058
69	34	5365-01-374-6928	19207	12417975-006
69	35	6160-01-442-9795	24995	11089
69	36	5310-00-768-0318	96906	MS51967-14
69	37		19207	12420173
69	38	5305-00-990-8350	96906	MS24671-76
69	39	5310-01-363-0740	19207	12414473-014
69	40	5310-01-363-4881	19207	12414474-015
69	41		19207	12420855
69	42	5310-01-342-2739	15526	DIN 934 ST M6
69	43	6160-01-442-9783	0FW39	12420856
69	44	5305-00-174-4500	96906	MS51849-67
69	45	5340-01-391-9682	19207	12420090
69	46	5330-01-408-0930	19207	12420358
69	47	5310-01-374-6990	19207	12414473-010
69	48	5310-01-381-9901	19207	12412478-04
69	49	5305-01-006-2052	96906	MS51849-65
69	50		0FW39	12420089-001
69	51	5305-01-140-2490	05824	M10X1.5X30 DIN93 3 ST
69	52		19207	12420082
69	53	5306-01-270-7217	81495	071 410 36
69	54	5340-01-434-1338	92489	11557-3
69	55	5305-00-477-0120	96906	MS51861-46C

CROSS REFERENCE INDEXES

FIGURE AND ITEM NUMBER INDEX

FIGURE NO	ITEM NO	STOCK NUMBER	FSCM	PART NUMBER
69	56	6630-01-435-7338	0FW39	TV950079-001
69	57	5340-00-943-6041	96906	MS25281F4
69	58	5920-00-836-2517	71400	MGB1-4
70	1	5340-00-725-5280	96906	MS21333-125
70	2	5975-01-422-7556	19207	12421186-002
70	3	5999-01-423-5170	19207	12421186-001
70	4		18076	S630H-16
70	5	5340-01-270-8588	45152	2AA855
70	6	5305-01-178-7349	56161	10503805
70	7		18076	S630H-10
70	8	5340-00-809-1500	96906	MS21333-107
70	9	5310-01-342-2739	15526	DIN 934 ST M6
70	10	5305-01-299-4602	64678	000933 006058
70	11	5935-01-152-6814	71468	120-1809-000
70	12	5935-01-K64-0318	19207	12420765
71	1	2990-01-420-9957	19207	12420875
71	2	9905-00-893-3570	81349	M43436/1-3
71	3	5999-01-327-6598	09922	SM14M-1TK6
71	4	5935-01-108-4522	09922	SMS12P-1
71	5	5935-01-160-0013	09922	SMS36R-1
71	6	5999-01-340-7698	09922	SC14M-1TK6
71	7	9905-00-945-7637	81349	M43436/1-4
71	8	9905-00-841-4445	81349	M43436/1-2
71	9	5935-01-149-5165	11083	7N9738
71	10	5999-01-150-8808	11083	7N7779
71	11	5315-01-156-6314	71468	110238-0195
71	12	5935-01-150-8322	11083	7N7782
71	13	5935-01-150-8323	11083	7N9737
71	14	9905-00-752-4649	81349	M43436/1-1
71	15	5935-00-115-2307	96906	MS27144-2
71	16	5935-01-154-6233	19207	12258940-4
71	17	5940-00-114-1300	96906	MS20659-105
71	18	5940-00-107-1481	96906	MS20659-104
71	19	5940-00-113-3145	96906	MS20659-163
71	20	5940-00-230-0515	96906	MS25036-154
72	1	6150-01-422-3450	19207	12420876
72	2	5935-01-102-7124	11083	5R7840
72	3	9905-00-945-7637	81349	M43436/1-4
72	4	9905-00-893-3570	81349	M43436/1-3
72	5	5999-01-195-0606	09922	SC16M-1TK6
72	6	5935-01-013-9680	09922	SMS12R-1
72	7	5935-01-422-0363	09922	SMS9R-1
72	8	5940-01-421-6922	06721	300634AE
72	9	5940-00-557-1630	96906	MS25036-147
72	10	5940-00-143-4780	96906	MS25036-108
73	1	5305-01-299-4602	64678	000933 006058
73	2	5310-01-411-5798	19207	12417963-004
73	3	5310-01-342-2739	15526	DIN 934 ST M6
73	4	6150-01-373-8336	0FW39	12378502
73	5	5999-01-150-8808	11083	7N7779
73	6	5315-01-156-6314	71468	110238-0195
73	7	5935-01-153-8291	71468	120-1870-000

CROSS REFERENCE INDEXES

FIGURE AND ITEM NUMBER INDEX

FIGURE NO	ITEM NO	STOCK NUMBER	FSCM	PART NUMBER
73	8	5970-01-373-5691	75037	313H253-6-250
73	9	9905-00-841-4445	81349	M43436/1-2
73	10	5970-01-374-0822	75037	313H285-6-250
73	11	5935-00-846-3884	96906	MS75021-2
73	12	5935-00-773-1428	19207	7731428
74	1	6150-01-377-0409	73342	29509959
74	2	6150-01-423-6332	19207	12420826
74	3	6150-01-420-5987	73342	295159210
75	1		0FW39	12421783-001
75	1		0FW39	12421783-002
75	2	5935-01-148-4523	71468	031-0560-161
75	3		0FW39	12421832-003
75	4		0FW39	12421825
75	5	5935-00-235-8970	96906	MS27488-16
75	6	9905-00-945-7637	81349	M43436/1-4
75	7		19207	12421833
75	8		19207	12421837
75	9		0FW39	12421836
75	10		0FW39	12421834
75	11		0FW39	12421838
76	1	6150-01-430-3540	0FW39	12420891-001
76	2	5935-01-149-5165	11083	7N9738
76	3	5315-01-156-6314	71468	110238-0195
76	4	9905-00-893-3570	81349	M43436/1-3
76	5	5940-00-874-9033	00779	41274
76	6		09769	926474-1
76	7	5970-00-113-3147	96906	MS20659-127
76	8	9905-00-752-4649	81349	M43436/1-1
76	9	5999-01-150-8808	11083	7N7779
77	1	5305-01-299-4602	64678	000933 006058
77	2	5310-01-374-4515	19207	12414570-013
77	3	5310-01-342-2739	15526	DIN 934 ST M6
77	4	6150-01-422-3453	0FW39	12420879
77	5	5935-01-372-1986	13445	12080
77	6	5970-01-374-0822	75037	313H285-6-250
77	7	9905-00-893-3570	81349	M43436/1-3
77	8	5970-01-373-5691	75037	313H253-6-250
77	9	5935-01-155-7718	71468	120-1874-000
77	10	5999-01-150-8808	11083	7N7779
77	11	5315-01-156-6314	71468	110238-0195
77	12	5305-01-178-7349	56161	10503805
78	1	5310-01-384-7280	84256	ALS3-470-2.0
78	2		18076	S630H-10
78	3	5310-12-196-5989	D8286	DIN9021-5,3-100H V-C-B3B
78	4	5305-01-372-1266	19207	12414419-042
78	5	5340-01-375-3101	71468	CA121003-901
78	6	5305-01-158-0793	56161	10505582
78	7	5325-00-074-3301	96906	MS21266-2N
78	8	5310-01-369-3332	19207	12414315-006
78	9	5310-01-376-5302	19207	12417975-008
78	10	5310-00-616-6354	96906	MS35335-38

CROSS REFERENCE INDEXES

FIGURE AND ITEM NUMBER INDEX

FIGURE NO	ITEM NO	STOCK NUMBER	FSCM	PART NUMBER
78	11	5340-01-270-8588	45152	2AA855
78	12	9390-01-420-4560	81348	ZZR765/03-001A7
78	13	5310-01-370-7447	19207	12414474-010
78	14	5310-00-527-3634	96906	MS35335-61
78	15	5365-01-374-6928	19207	12417975-006
78	16	5305-01-268-3656	15526	DIN933-M6X16-8.8 -A4C
78	17	5325-01-420-6001	19207	12420959-002
78	18	5305-00-889-3000	96906	MS35206-230
78	19	5310-00-209-0788	96906	MS35335-30
78	20	5310-00-763-3413	96906	MS15795-847
78	21	5310-00-933-8119	96906	MS35338-137
78	22	5310-00-934-9759	96906	MS35649-284
78	23	5325-01-420-6138	19207	12420959-001
78	24	5935-01-421-9754	81349	M28840/24HA
78	25	5310-00-934-9747	96906	MS35649-262
78	26	5930-01-292-6730	45152	1588570
78	27	5340-01-377-0296	19207	12417875
78	28	5935-01-114-5354	19207	12258943
78	29	5305-01-178-7349	56161	10503805
78	30	5310-01-381-9929	84256	ALS3-610-4.2
78	31	5340-01-420-5139	19207	12420960
78	32	5310-01-155-1911	34914	990 3861
78	33	5305-01-149-0867	05523	42051-14
78	34		18076	S630H-40
78	35	5325-00-926-1394	96906	MS21266-3N
79	1	6150-01-423-7745	19207	12420874
79	2	5935-00-115-2307	96906	MS27144-2
79	3	9905-00-752-4649	81349	M43436/1-1
79	4	9905-00-841-4445	81349	M43436/1-2
79	5	5935-01-381-4161	71468	CA3100E10SL-4S-B -02
79	6	5940-00-926-0085	74025	10476-103
80	1	6150-01-K64-0321	19207	12420871
80	1	6150-01-423-7763	19207	12420873
80	2	5940-00-926-0085	74025	10476-103
80	3	9905-00-752-4649	81349	M43436/101
80	4	5940-00-107-1481	96906	M2S20659-104
80	5	5935-00-115-2307	96906	MS27144-2
80	6	5940-00-114-1300	96906	MS20659-105
81	1	6150-01-420-9200	0FW39	12420892
81	2	5940-00-926-0085	74025	10476-103
81	3	9905-00-752-4649	81349	M43436/1-1
81	4	5935-01-149-5165	11083	7N9738
81	5	5999-01-150-8808	11083	7N7779
81	6	5315-01-156-6314	71468	110238-0195
82	1	6150-01-420-9199	19207	12420893
82	2	5315-01-156-6314	71468	110238-0195
82	3	5999-01-150-8808	11083	7N7779
82	4	5935-01-150-8323	11083	7N9737
82	5	9905-00-752-4649	81349	M43436/1-1
82	6	5935-00-115-2307	96906	MS27144-2

CROSS REFERENCE INDEXES

FIGURE AND ITEM NUMBER INDEX

FIGURE NO	ITEM NO	STOCK NUMBER	FSCM	PART NUMBER
82	7	5940-00-107-1481	96906	MS20659-104
83	1	6150-01-422-3459	0FW39	12420881
83	2	5315-01-156-6314	71468	110238-0195
83	3	5999-01-150-8808	11083	7N7779
83	4	5935-01-150-8323	11083	7N9737
83	5	9905-00-841-4445	81349	M43436/1-2
83	6	9905-00-752-4649	81349	M43436/1-1
83	7	5940-00-113-9819	96906	MS20659-106
83	8	6150-01-K64-0407	15526	DIN43650AF2
83	9	5330-01-295-0115	0FW39	12421155
84	1	6150-01-423-7736	19207	12420869-001
84	2		09922	SMS18R-1
84	3	5999-01-340-7698	09922	SC14M-1TK6
84	4	9905-00-945-7637	81349	M43436/1-4
84	5	9905-00-752-4649	81349	M43436/1-1
84	6	5935-00-115-2307	96906	MS27144-2
84	7	5940-00-114-1300	96906	MS20659-105
84	8	5940-00-107-1481	96906	MS20659-104
84	9	5940-00-113-9820	96906	MS20659-128
84	10	5940-00-113-3147	96906	MS20659-127
84	11	5940-00-113-3145	96906	MS20659-163
84	12	9905-00-893-3570	81349	M43436/1-3
84	13	5935-01-156-7789	11083	9G3667
84	14	5315-01-156-6314	71468	110238-0195
84	15	5999-01-150-8808	11083	7N7779
84	16	5935-01-153-7519	71468	120-1873-000
84	17	5940-00-113-9819	96906	MS20659-106
85	1	6150-01-422-3454	19207	12420868-001
85	2	5935-01-222-2700	09922	SMS18P-1
85	3	5999-01-327-6598	09922	SM14M-1TK6
85	4	9905-00-945-7637	81349	M43436/1-4
85	5	9905-00-752-4649	81349	M43436/1-1
85	6	5935-00-115-2307	96906	MS27144-2
85	7	5940-00-113-3147	96906	MS20659-127
85	8	5940-00-113-9820	96906	MS20659-128
85	9	5935-00-115-2306	96906	MS27142-3
85	10	5940-00-113-9819	96906	MS20659-106
85	11	5935-01-153-7519	71468	120-1873-000
85	12	5315-01-156-6314	71468	110238-0195
85	13	5999-01-150-8808	11083	7N7779
85	14	9905-00-893-3570	81349	M43436/1-3
85	15	5935-01-150-8323	11083	7N9737
85	16	5940-00-107-1481	96906	MS20659-104
85	17		06721	1325530
86	1	6150-01-422-3455	0FW39	12420870
86	2	5935-01-108-4522	09922	SMS12P-1
86	3	5999-01-327-6598	09922	SM14M-1TK6
86	4	5999-01-195-0605	09922	SM16M-1TK6
86	5	9905-00-893-3570	81349	M43436/1-3
86	6	5935-01-111-6744	96906	MS3474W14-5S
86	7	5935-00-990-5580	96906	MS3181-14N
86	8	9905-00-752-4649	81349	M43436/1-1

CROSS REFERENCE INDEXES

FIGURE AND ITEM NUMBER INDEX

FIGURE NO	ITEM NO	STOCK NUMBER	FSCM	PART NUMBER
86	9	9905-00-841-4445	81349	M43436/1-2
86	10	5940-00-114-1300	96906	MS20659-105
86	11	5940-00-113-9820	96906	MS20659-128
86	12	5940-00-113-3145	96906	MS20659-163
86	13	5940-00-113-3147	96906	MS20659-127
86	14	5315-01-156-6314	71468	110238-0195
86	15	5935-01-149-5165	11083	7N9738
86	16	5999-01-150-8808	11083	7N7779
86	17	5935-01-150-8323	11083	7N9737
86	18	5935-01-390-0329	57094	MT92374
86	19	5940-00-113-9819	96906	MS20659-106
86	20	5940-01-370-5059	77060	12103881
86	21	5935-01-319-2334	77060	12040753
86	22	5940-00-113-9821	96906	MS20659-166
86	23	5940-00-113-3148	96906	MS20659-164
86	24	5940-00-107-1481	96906	MS20659-104
86	25	5935-01-422-8717	09922	SMS9P-1
87	1	6150-01-422-3592	0FW39	12420880
87	2		09922	SMS18R-1
87	3	5999-01-340-7698	09922	SC14M-1TK6
87	4	9905-00-841-4445	81349	M43436/1-2
87	5	5935-01-149-5165	11083	7N9738
87	6	5315-01-156-6314	71468	110238-0195
87	7	5999-01-150-8808	11083	7N7779
87	8	9905-00-752-4649	81349	M43436/1-1
87	9	5940-00-113-9820	96906	MS20659-128
87	10	5940-00-113-9819	96906	MS20659-106
87	11	5935-01-381-4054	19207	12419176
87	12	5940-01-370-5059	77060	12103881
87	13	5935-01-360-3994	98255	SW26098
87	14	5975-01-226-8078	77060	12010293
88	1		19207	12420885-001
88	2	5935-01-095-1563	09922	SMS24R-1
88	3	5999-01-340-7698	09922	SC14M-1TK6
88	4	9905-00-841-4445	81349	M43436/1-2
88	5		19207	12420924-002X
88	6		19207	12420924-003X
88	7	9905-00-893-3570	81349	M43436/1-3
88	8	5970-01-373-5691	75037	313H253-6-250
88	9	5935-01-381-4308	19207	12419962
88	10	5325-01-423-0783	57094	MT8002-13-1
88	11	5920-01-292-6688	71400	HFB
88	12	5920-01-273-5455	81349	F02A32V25A
88	13		19207	12420924-001X
88	14	9905-00-752-4649	81349	M43436/1-1
88	15	5940-00-113-9819	96906	MS20659-106
88	16	5940-00-113-9820	96906	MS20659-128
89	1	6150-01-422-3452	0FW39	12420890-001
90	1	6150-01-374-7777	19207	12417279
90	2	5935-01-150-8323	11083	7N9737
90	3	5999-01-150-8808	11083	7N7779
90	4	5315-01-156-6314	71468	110238-0195

CROSS REFERENCE INDEXES

FIGURE AND ITEM NUMBER INDEX

FIGURE NO	ITEM NO	STOCK NUMBER	FSCM	PART NUMBER
90	5	5970-01-373-5692	75037	313H232-6-250
90	6	9905-00-752-4649	81349	M43436/1-1
90	7	5970-01-161-6796	81349	M23053/4-302-0
90	8	5999-00-172-8254	81349	M39029/4-111
91	1		19207	12420897
91	2	5940-00-115-2686	96906	MS20659-136
91	3	5970-01-379-7195	7V059	EPS-300 3/4 BLAC K
91	4	9905-00-893-3570	81349	M43436/1-3
91	5	7690-01-423-0249	20999	SCS-HB21
91	6	5940-00-115-5004	96906	MS20659-120
92	1		19207	12420898
92	2	5940-00-115-2684	96906	MS20659-118
92	3	5970-01-379-7195	7V059	EPS-300 3/4 BLAC K
92	4	9905-00-893-3570	81349	M43436/1-3
92	5	7690-01-423-0249	20999	SCS-HB21
93	1		19207	12420899
93	2	5940-00-115-2683	96906	MS20659-151
93	3	5970-01-379-7195	7V059	EPS-300 3/4 BLAC K
93	4	9905-00-893-3570	81349	M43436/1-3
93	5	7690-01-423-0249	20999	SCS-HB21
93	6	5940-00-115-2684	96906	MS20659-118
94	1		19207	12420900
94	2	5940-00-115-4995	96906	MS20659-112
94	3	5970-01-379-7195	7V059	EPS-300 3/4 BLAC K
94	4	9905-00-841-4445	81349	M43436/1-2
94	5	7690-01-423-0249	20999	SCS-HB21
94	6	5940-00-115-2679	96906	MS20659-132
95	1		19207	12420901
95	2	5940-00-115-4995	96906	MS20659-112
95	3	5970-01-379-7195	7V059	EPS-300 3/4 BLAC K
95	4	9905-00-841-4445	81349	M43436/1-2
95	5	7690-01-423-0249	20999	SCS-HB21
95	6	5940-00-115-2679	96906	MS20659-132
96	1		19207	12420902
96	2	5940-00-115-2678	96906	MS20659-111
96	3	5970-01-379-7195	7V059	EPS-300 3/4 BLAC K
96	4	9905-00-841-4445	81349	M43436/1-2
96	5	7690-01-423-0249	20999	SCS-HB21
96	6	5940-00-115-2679	96906	MS20659-132
97	1		19207	12420904
97	2	5940-00-115-5004	96906	MS20659-120
97	3	5970-01-379-7195	7V059	EPS-300 3/4 BLAC K
97	4	9905-00-893-3570	81349	M43436/1-3
97	5	7690-01-423-0249	20999	SCS-HB21
97	6	5940-00-115-2686	96906	MS20659-136

CROSS REFERENCE INDEXES

FIGURE AND ITEM NUMBER INDEX

FIGURE NO	ITEM NO	STOCK NUMBER	FSCM	PART NUMBER
98	1		19207	12420905
98	2	5940-00-115-5004	96906	MS20659-120
98	3	5970-01-379-7195	7V059	EPS-300 3/4 BLAC K
98	4	9905-00-893-3570	81349	M43436/1-3
98	5	7690-01-423-0249	20999	SCS-HB21
99	1		19207	12420906
99	2	5940-00-115-2684	96906	MS20659-118
99	3	5970-01-379-7195	7V059	EPS-300 3/4 BLAC K
99	4	9905-00-893-3570	81349	M43436/1-3
99	5	7690-01-423-0249	20999	SCS-HB21
100	1		0FW39	12420955
100	2	5940-00-115-2684	96906	MS20659-118
100	3	5970-01-379-7195	7V059	EPS-300 3/4 BLAC K
100	4	9905-00-893-3570	81349	M43436/1-3
100	5	7690-01-423-0249	20999	SCS-HB21
101	1	6150-01-423-5385	0FW39	12420872
101	2	5940-00-926-0085	74025	10476-103
101	3	9905-00-752-4649	81349	M43436/1-1
101	4	5935-00-115-2307	96906	MS27144-2
101	5	5940-00-107-1481	96906	MS20659-104
102	1	5340-01-270-8588	45152	2AA855
102	2	5310-01-342-2739	15526	DIN 934 ST M6
102	3	5305-01-178-7349	56161	10503805
102	4	5310-01-369-6073	19207	12414308-007
102	5	5340-01-395-5097	19207	12420352-001
102	6	5340-01-377-6171	18076	S630H-24
102	7	5306-01-369-8193	19207	12414307-078
102	8	5310-01-369-3338	19207	12414308-021
102	9	5999-01-372-4231	0B832	1946
102	10	5310-00-616-6354	96906	MS35339-38
102	11	5310-01-381-9830	19207	12414308-017
102	12	5310-01-374-4516	19207	12414570-021
102	13	5306-01-421-6167	19207	12417958-016
102	14	5305-01-166-0615	56161	10503770
102	15	5310-01-115-0762	19200	12524631-1
102	16	5310-01-374-1381	19207	12414315-002
102	17	5310-01-388-2043	19207	12414570-015
102	18	5305-01-268-9100	19207	12414419-080
103	1	6150-01-376-7889	19207	12378685-001
104	1	6150-01-429-8189	0FW39	12420887
104	2	9905-00-893-3570	81349	M43436/1-3
104	3	5999-01-178-4336	00779	350550-6
104	4	5935-01-323-8568	58536	A-A-55464-07
104	5	5940-01-407-5587	00779	350923-6
104	6	5935-01-293-5988	03956	1805607-40
104	7	5999-01-420-7757	19207	12420915-003
104	8	5935-01-154-6233	19207	12258940-4
104	9	5315-01-156-6314	71468	110238-0195
104	10	5999-01-150-8808	11083	7N7779

CROSS REFERENCE INDEXES

FIGURE AND ITEM NUMBER INDEX

FIGURE NO	ITEM NO	STOCK NUMBER	FSCM	PART NUMBER
104	11	9905-00-752-4649	81349	M43436/1-1
104	12	5940-01-353-6476	00779	60253-2
104	13	5935-01-351-4732	82484	913 328
104	14	5940-00-874-9033	00779	41274
104	15	9905-00-841-4445	81349	M43436/1-2
104	16	5935-01-351-1892	82484	596289
104	17	5999-01-195-0605	09922	SM16M-1TK6
104	18	5935-01-222-2700	09922	SMS18P-1
104	19	5999-01-327-6598	09922	SM14M-1TK6
104	20	5935-01-072-3922	09922	SMS24P-1
105	1	5305-01-178-7349	56161	10503805
105	2	5365-01-374-6928	19207	12417975-006
105	3	5340-01-371-7188	19207	12414714
105	4	5310-01-373-0748	84256	ALS3-470-3.3
105	5	5305-01-372-1266	19207	12414419-042
105	6	2520-01-361-1091	73342	29519627
105	7	5325-01-443-1459	73342	29511130
105	8		19207	12421437-001X
105	9		19207	12421437-002X
105	10	5850-01-K64-9178	19207	12421435
106	1	5305-01-178-7349	56161	10503805
106	2	5310-01-115-0762	19200	12524631-1
106	3	5305-01-268-3656	15526	DIN933-M6X16-8.8 -A4C
106	4	6110-01-384-5101	73342	29509889
106	5	5305-01-158-0834	56161	10504005
106	6	5310-01-360-0979	73342	29506165
106	7	5330-01-360-5329	73342	29505809
106	8	5920-01-123-5211	11862	12004007
106	9	5945-01-360-2773	73342	29505936
106	10	5945-01-360-5068	73342	29505935
106	11	5310-01-442-2436	73342	29506511
107	1		0FW39	12421786
108	1		0FW39	12421787
108	2		19207	12414473-001
108	3	5305-01-178-7349	56161	10503805
109	1	5325-01-360-1669	73342	29503209
109	2	5340-01-360-1045	73342	29503207
109	3	5330-01-361-9785	73342	29503208
109	4	5305-01-329-7038	75755	19M8029
109	5	5365-01-360-1017	73342	29505686
109	5	5365-01-360-1018	73342	29505684
109	5	5365-01-360-1019	73342	29505683
109	5	5365-01-360-1721	73342	29505685
109	5	5365-01-360-1020	73342	29505682
109	5	5365-01-360-1022	73342	29505688
109	5	5365-01-360-1021	73342	29505681
109	6		73342	29503986
109	7	5310-01-359-8760	73342	23049381
109	8		73342	29503194
109	9	2590-01-361-2371	73342	29503195
109	9	2590-01-439-5730	73342	29514803

CROSS REFERENCE INDEXES

FIGURE AND ITEM NUMBER INDEX

FIGURE NO	ITEM NO	STOCK NUMBER	FSCM	PART NUMBER
109	10	5310-01-360-1064	73342	23046228
109	11	3120-01-360-7534	73342	29503196
109	12	5310-01-359-8839	73342	29503197
109	13	2520-01-360-6353	73342	29500939
109	14	2835-01-360-1757	73342	23046868
109	15	2520-01-361-5191	73342	23046236
109	16	2520-01-361-1090	73342	29500655
109	16	2520-01-361-1090	73342	29514804
109	17	5305-01-439-6427	73342	29514805
109	17	5305-01-359-9390	73342	29500667
109	18	5310-01-359-8840	73342	29500025
109	19	4320-01-360-9332	73342	29503979
109	20		73342	29503983
109	21	3120-01-360-7543	73342	29500768
109	22	5325-01-360-0958	73342	29503239
109	23	2805-01-360-6327	73342	29503980
109	24	5310-01-360-1065	73342	29500066
109	25	3120-01-361-5297	73342	29500068
109	26	5360-01-360-2023	73342	29500064
109	27	3110-01-360-7501	73342	29500063
109	28	2520-01-388-5818	73342	29503633
109	29	3110-01-360-7492	73342	23045918
109	30	5365-01-360-1715	73342	29502277
109	30	5365-01-360-1023	73342	29502275
109	30	5365-01-360-1024	73342	29502276
109	31	5330-01-361-9052	73342	23049377
109	32	2815-01-439-5725	73342	29514790
109	33	5306-01-360-1970	73342	29500616
109	34	3120-01-360-7545	73342	29500908
110	1	2520-01-418-9010	0FW39	12414438-003
111	1	5340-01-374-0501	81860	25923
111	2	2510-01-374-3735	0FW39	12417615
111	3	5306-01-384-3485	19207	12414307-149
111	4	5305-01-375-1086	19207	12414307-077
111	5	2510-01-377-8986	0FW39	12417614
111	6	5310-01-369-6706	19207	12414308-025
111	7	5306-01-371-7161	19207	12414307-141
112	1	6680-01-374-4912	01943	91620-A
112	2	5306-01-266-7779	81495	071 408 32
112	3	5310-01-369-3332	19207	12414315-006
112	4	5340-01-388-0948	73342	29507755
112	5	5305-01-360-2981	73342	29519212
112	6	5330-01-360-7826	73342	29507823
113	1	5305-01-360-1137	73342	11505242
113	2	5305-01-251-1626	11862	12337902
113	3		73342	29503297
113	4	3040-01-439-5484	73342	29514801
113	4	3040-01-360-6346	73342	29502322
113	5	4320-01-439-8329	73342	29523725
113	5	4320-01-361-5145	73342	23049376
113	6	3120-01-439-9133	73342	29514538
113	6	3120-01-360-7532	73342	6881926

CROSS REFERENCE INDEXES

FIGURE AND ITEM NUMBER INDEX

FIGURE NO	ITEM NO	STOCK NUMBER	FSCM	PART NUMBER
113	7	2520-01-439-8297	73342	29516486
113	7	4320-01-365-2837	73342	29502030
113	8	5315-01-360-5913	73342	29501135
113	9	5365-01-359-9402	73342	23045812
113	10	3110-01-360-7490	73342	23047834
113	11	5330-01-360-7516	73342	23042433
113	12	3110-01-360-7503	73342	23045816
113	13	3040-01-361-2504	73342	29505904
113	14	4320-01-360-7970	73342	29505905
113	15	5306-01-338-3981	21969	DIN933-M10X25-8.8-B3B
113	16		73342	29507709
113	17	3110-00-100-6170	24617	145651
113	18		73342	29516030
114	1		73342	29501568
114	2	5325-01-359-9359	73342	29500699
114	3	3120-01-360-7540	73342	23047854
114	4	3020-01-360-6386	73342	29503066
114	5		73342	29501569
114	6	5325-01-359-9360	73342	29500689
114	7	3110-01-360-7565	73342	29501558
114	8	3040-01-360-6524	73342	29501557
114	9	3010-01-360-6338	73342	29501570
114	10	3120-01-360-7541	73342	29502040
114	11	3110-01-360-7504	73342	29503397
114	12	3020-01-361-0576	73342	29500573
115	1		73342	29501551
115	2	5330-01-388-1576	73342	29503974
115	3	5325-01-359-9359	73342	29500699
115	4	3020-01-360-6384	73342	29503067
115	5		73342	29501565
115	6	3010-01-360-4442	73342	29501544
115	7	3120-01-360-7533	73342	29501539
115	8	5325-01-359-9361	73342	29501560
115	9	5325-01-359-9360	73342	29500689
115	10	3040-01-360-6525	73342	29501556
115	11	3120-01-360-7542	73342	29502037
115	12	3020-01-360-7953	73342	29500571
115	13	3110-01-360-7491	73342	29503398
116	1	5365-01-359-9403	73342	29503228
116	1	5365-01-359-9404	73342	29503232
116	1	5365-01-360-1037	73342	29503229
116	1	5365-01-360-1041	73342	29503231
116	1	5365-01-360-1038	73342	29503227
116	1	5365-01-360-1040	73342	29503230
116	1	5365-01-360-1039	73342	29503226
116	2		73342	29502046
116	3	5325-01-359-9360	73342	29500689
116	4	5310-01-359-8811	73342	29501575
116	5	3040-01-360-6523	73342	29501574
116	6	3010-01-361-5151	73342	29502048
116	7	3120-01-360-7781	73342	29505606

CROSS REFERENCE INDEXES

FIGURE AND ITEM NUMBER INDEX

FIGURE NO	ITEM NO	STOCK NUMBER	FSCM	PART NUMBER
116	8	3120-01-360-7784	73342	29511406
116	9	3120-01-360-7777	73342	29516199
116	10	3020-01-361-5142	73342	29502831
117	1		73342	29503289
117	2	5305-01-251-1626	11862	12337902
117	3		73342	29502370
117	4	5330-01-360-5917	73342	29507528
117	5	3120-01-360-7531	73342	23048146
117	6	3040-01-360-4449	73342	23048044
117	7	5330-01-360-9102	73342	23045614
117	8	5330-01-360-7516	73342	23042433
117	9	3110-01-360-7743	73342	23046439
117	10	3020-01-361-5169	73342	29511395
117	10	3020-01-361-5169	73342	29502320
117	11	5325-01-360-1973	73342	29503969
117	12	3040-01-360-8040	73342	29503970
117	12	3040-01-360-8040	73342	29511396
117	12	3040-01-439-7488	73342	29514799
117	13	2520-01-361-0592	73342	29503271
117	14	5330-01-361-0274	73342	29503288
117	15	5330-01-360-7520	73342	23048037
117	16	5340-01-360-1048	73342	23048038
117	17	5306-01-338-3981	73342 21969	DIN933-M10X25-8. 8-B3B
117	18	4730-01-388-5503	73342	29502386
117	19	2520-01-388-4778	73342	23047102
118	1	3120-01-360-7544	73342	29503225
118	2		73342	29506076
118	3	5325-01-359-9362	73342	29501538
118	4	3120-01-360-7543	73342	29500768
118	5	3020-01-360-7989	73342	29500767
118	6	5365-01-359-9366	73342	29505511
118	7	3020-01-360-7990	73342	29502001
118	8	3040-01-360-6284	73342	29506077
119	1	5325-01-360-0965	73342	23045657
119	2	2520-01-361-0603	73342	29500867
119	3	2520-01-361-0602	73342	29503053
119	4	5330-01-360-9104	73342	23045654
119	5	5330-01-360-9105	73342	23045655
119	6	5330-01-360-7521	73342	29534357
119	7	3040-01-360-4443	73342	29506122
119	8	5330-01-360-5262	73342	29506323
119	9	5305-01-359-9445	73342	11515469
119	10	5306-01-175-0980	60248	7000210070
119	11	5340-01-360-0982	73342	29507699
119	12	5330-01-424-4552	73342	29507700
119	13	4730-01-360-4455	73342	29507751
119	14	5306-01-362-4444	73342	11515371
119	15	5306-01-270-4217	81495	071 410 36
119	16	5305-01-268-9099	15526	DIN931-M12X10.9- A4C
119	17	5306-01-360-2033	73342	11515190

CROSS REFERENCE INDEXES

FIGURE AND ITEM NUMBER INDEX

FIGURE NO	ITEM NO	STOCK NUMBER	FSCM	PART NUMBER
120	1		73342	29501359
120	2	5305-01-360-1136	73342	11505328
120	3	2520-01-360-6312	73342	29501447
120	4	5320-01-360-0925	73342	11506706
120	5	2520-01-360-6324	73342	29503837
120	6	3020-01-361-0636	73342	29503079
120	7	2520-01-360-6317	73342	29528207
120	8	2520-01-361-3945	73342	29501423
120	9	5340-01-362-0046	73342	29505570
120	10	2520-01-361-6433	73342	29501424
120	11	2520-01-360-6328	73342	29505861
120	12	2520-01-361-0600	73342	23048367
120	13	3040-01-360-6345	73342	29501449
120	14	3040-01-360-6019	73342	29501360
120	15	2520-01-361-0596	73342	23045573
120	16	2520-01-360-6318	73342	29532371
120	17	5305-01-251-1626	11867	12337902
120	18	2520-01-361-0608	73342	29507511
120	19	5305-01-388-2091	73342	11515355
120	20	5340-01-359-8809	73342	12092196
120	21	5305-01-360-2854	73342	141445
120	22	9905-01-361-3389	73342	29503353
121	1		73342	29503255
121	2	5330-01-360-6018	73342	23046274
121	3	3040-01-361-2338	73342	29503278
121	3	3040-01-361-2338	73342	29516494
121	4	3120-01-360-7778	73342	29505560
121	5	5330-01-360-5459	73342	23042434
121	6	2520-01-360-6310	73342	29501076
121	7	3120-01-360-7779	73342	23045582
121	8	3020-01-361-3957	73342	29503251
121	9	3120-01-360-7540	73342	23047854
121	10	5325-01-360-0962	73342	29505891
121	11	5330-01-360-9099	73342	23045611
121	12	5330-01-360-9100	73342	23045612
121	13	5330-01-360-9101	73342	23045613
121	14	2520-01-360-6325	73342	23048692
121	15	2520-01-360-8091	73342	29503215
121	16	5325-01-360-0963	73342	23046291
121	17	5330-01-360-9102	73342	23045614
121	18	2520-01-360-6326	73342	29506195
121	19	2510-01-360-8092	73342	23045586
121	20	2520-01-361-0601	73342	23048133
121	21	5330-01-360-9103	73342	23045615
121	22	5325-01-360-0964	73342	23045618
121	23	2520-01-361-8280	73342	23047219
121	24	2520-01-360-6319	73342	23045588
121	25	2520-01-360-6499	73342	23045589
121	26	3040-01-361-0755	73342	29516169
121	27	3040-01-361-0756	73342	29500687
121	28	2520-01-360-9265	73342	29503141
121	29	2520-01-361-0597	73342	23048628

CROSS REFERENCE INDEXES

FIGURE AND ITEM NUMBER INDEX

FIGURE NO	ITEM NO	STOCK NUMBER	FSCM	PART NUMBER
121	30	2520-01-361-0745	73342	23048530
121	31		73342	29503084
121	32	3120-01-360-7780	73342	29500708
122	1		73342	29503519
122	2	5306-01-359-9429	73342	11515310
122	3		73342	29506205
122	4	4730-01-388-5390	73342	29503542
122	5	2940-01-360-7986	73342	29502194
122	6	5315-01-360-6729	73342	23049307
122	7	5360-01-359-7944	73342	29502195
122	8	5945-01-360-2771	73342	29500888
122	9	5330-01-360-6014	73342	29503380
122	10	5330-01-360-6013	73342	29503382
122	11	4810-01-360-4314	73342	29503564
122	12	5330-01-360-6006	73342	23046376
122	13	5306-01-281-0554	62445	111 2290
122	14	2940-01-360-3389	73342	29502068
122	15	4730-01-360-4458	73342	29503670
122	16	5330-01-360-9034	73342	29503263
122	17	5340-01-359-8825	73342	29505992
122	18	5306-01-281-0554	18876	13142983-22/11
122	19	5306-01-388-0500	73342	29508407
122	20	6150-01-435-9924	73342	29516324
122	21	6150-01-362-5197	73342	29503662
122	22	5945-01-360-5163	73342	23049304
122	23	5330-01-360-6015	73342	29503381
122	24	5330-01-360-6017	73342	29503383
122	25	4810-01-388-5428	73342	29503565
122	26		73342	29503596
122	27	5305-01-359-7999	73342	29503641
122	28	5930-01-360-5002	73342	29506484
122	29	5330-01-388-1528	73342	29501439
122	30	5360-01-359-7944	73342	29502195
122	31	4810-01-360-4314	73342	29503564
122	32	5945-01-360-5161	73342	29507453
122	33	5330-01-360-6013	73342	29503382
122	34	5330-01-360-6014	73342	29503380
122	35	5945-01-360-5162	73342	23049306
122	36	5330-01-360-6015	73342	29503381
122	37	5330-01-360-6016	73342	23014057
122	38	5315-01-360-6729	73342	23049307
122	39	4820-01-360-2421	73342	29507432
122	40		73342	29503595
122	41	5340-01-359-8849	73342	23049343
122	42	5360-01-359-7945	73342	23049332
122	43	4820-01-360-2354	73342	23049321
122	44	4810-01-360-4433	73342	29507433
122	45	5315-01-360-6729	73342	23049307
122	46	5315-01-360-4771	73342	23049372
122	47	5945-01-360-5161	73342	29507453
122	48	5330-01-360-6014	73342	29503380
122	49	5330-01-360-6013	73342	29503382

CROSS REFERENCE INDEXES

FIGURE AND ITEM NUMBER INDEX

FIGURE NO	ITEM NO	STOCK NUMBER	FSCM	PART NUMBER
122	50	4810-01-360-4314	73342	29503564
122	51	5360-01-359-7944	73342	29502195
122	52	5305-01-359-8003	73342	11515315
122	53	6695-01-370-8679	73342	29503531
122	54	5365-01-359-9408	73342	29503588
122	55		11083	29503675
122	56	5340-01-360-7812	73342	29500822
122	57	5340-01-360-5983	73342	23049345
122	58	5340-01-360-5984	73342	29500823
122	59	4820-01-360-2355	73342	23049315
122	60	5360-01-359-7946	73342	23049326
122	61	5340-01-359-8850	73342	23049337
122	62	5340-01-359-8851	73342	23049338
122	63	5360-01-359-7947	73342	23049327
122	64	4820-01-360-6160	73342	23049316
122	65	4820-01-361-1924	73342	23049312
122	66	5360-01-359-7948	73342	29500963
122	67	5340-01-359-8852	73342	29503663
122	68	5340-01-359-8853	73342	29503674
122	69	5360-01-359-7949	73342	23049325
122	70	4820-01-360-9095	73342	29503674
122	71	5945-01-360-5163	73342	23049304
122	72	5330-01-360-6017	73342	29503383
122	73	5330-01-360-6015	73342	29503381
122	74	5315-01-360-4772	73342	11513011
122	75	4820-01-360-7964	73342	29507429
122	76	4820-01-361-0593	73342	29500956
122	77	5360-01-359-7950	73342	29501071
122	78	5340-01-359-9416	73342	23049341
122	79	5340-01-360-1075	73342	23049342
122	80	5360-01-359-7951	73342	23049391
122	81	4820-01-360-6161	73342	23049320
122	82	4820-01-360-6162	73342	23049318
122	83	5360-01-359-7952	73342	6885065
122	84	5340-01-359-8854	73342	23049340
122	85	5360-01-359-7953	73342	23049329
122	86	4820-01-360-4408	73342	23049317
122	87	5340-01-360-1076	73342	23049339
122	88	5330-01-360-9035	73342	29503283
122	89	5365-01-390-5882	73342	29524397
122	90	5330-01-439-8823	73342	29524394
122	91	5365-01-390-5878	73342	29507443
122	91	5365-01-439-4257	73342	29524444
122	92	5315-01-360-5914	73342	23046354
122	93	5365-01-360-0937	73342	29503360
122	94	5330-01-361-0235	73342	23019664
122	95	5330-01-424-6629	73342	23043446
122	96	5365-01-359-9336	73342	29500034
122	97	5305-01-359-8004	73342	29505612
122	98	5365-01-359-9336	73342	29500034
122	99	5330-01-424-6629	73342	23043446
123	1	5305-01-359-8004	73342	29505612

CROSS REFERENCE INDEXES

FIGURE AND ITEM NUMBER INDEX

FIGURE NO	ITEM NO	STOCK NUMBER	FSCM	PART NUMBER
123	2	5340-01-443-0317	73342	29524447
123	2	5340-01-360-1044	73342	29507434
123	3		73342	29524449
123	4	5330-01-439-6677	73342	29524448
123	4	5330-01-360-7724	73342	29501469
123	5	5330-01-360-7725	73342	29507437
123	6	2940-01-361-0628	73342	29501202
124	1	5340-01-384-0867	01943	EXP25360
124	2	5310-01-369-3332	19207	12414315-006
124	3	5310-01-155-1911	34914	990 3861
124	4	5306-01-266-7779	81495	071 408 32
124	5	4710-01-423-4873	19207	12420426
124	5	2590-01-417-0860	0FW39	12420543
124	6	4730-01-212-9613	7Z588	9420
124	7		19207	12418460-002
124	8	2590-01-384-0894	19207	12378887
124	9	5330-01-360-7826	73342	29507823
124	10	4710-01-K65-1574	19207	12420362
124	11		19207	12421890-001
124	12		0TE27	F4001-16
124	13		81343	J515-16-3
124	14	4730-01-434-1983	25281	065S9
124	15	4720-01-370-2999	16632	STE1002
124	16	4710-01-370-4819	0FW39	12414381-001
124	17	4730-01-439-7485	19207	12420493
124	18	2520-01-361-8237	78385	12414334-001
124	19		0FW39	12421379-005
124	20	5310-00-857-5559	96906	MS21045L5
124	21	4710-01-384-6229	19207	12414437
124	22		19207	12421891-001
124	23		81343	J515-16-3
124	24		0TE27	F4001-16
125	1	5330-01-407-1644	73342	29501144
125	2	4320-01-360-7954	73342	29506082
125	3	5305-01-251-1626	11862	12337902
125	4	5330-01-360-7852	73342	29500969
125	5	4730-01-360-6224	73342	29500645
125	6	4720-01-360-6226	73342	29506688
125	7	2940-01-361-2405	73342	29507750
125	8	4730-01-360-6216	73342	9410206
126	1	4720-01-443-6472	0FW39	12418004-001
126	1		0FW39	12418004-002
126	2	5365-01-378-2881	81343	4-070118C
126	3	4820-01-374-2819	0FW39	12414643
126	4	4730-01-092-0126	81343	4-4 070320C
126	5	5330-01-387-9490	81343	J515-4-1
127	1		73342	29506339
127	2	5305-01-163-1415	56161	10503407
127	3	5305-01-263-6154	81495	071 310 24
127	4	3040-01-362-1562	73342	29507842
127	5	4320-01-364-8293	73342	29507831
127	6	4820-01-360-4312	73342	29506355

CROSS REFERENCE INDEXES

FIGURE AND ITEM NUMBER INDEX

FIGURE NO	ITEM NO	STOCK NUMBER	FSCM	PART NUMBER
127	7	5360-01-359-7954	73342	29508115
127	8	5340-01-360-1077	73342	29508116
127	9	5315-01-360-7167	73342	29508117
127	10	5365-01-360-1717	73342	29502105
127	11	5365-01-360-1718	73342	29502106
127	12	5365-01-360-1025	73342	29502107
127	13	5935-01-360-5982	73342	29506354
127	14	5330-01-360-9037	73342	29506352
127	15	5935-01-360-5011	73342	29506351
127	16	5305-01-159-0065	56161	10501759
127	17	4730-01-360-4404	73342	29506239
127	18	4730-01-360-4145	73342	29506240
127	19	3040-01-360-6347	73342	29506340
127	20		73342	29506341
127	21	5315-01-360-5915	73342	29506344
127	22		73342	29506342
127	23	5330-01-360-9036	73342	29506210
127	24	3110-01-360-7497	73342	29502109
127	25	3110-01-360-7494	73342	29502110
127	26	3020-01-360-7991	73342	29506345
127	27	3110-01-360-7498	73342	29502114
127	28	3110-01-360-7495	73342	29502115
127	29	3020-01-361-3956	73342	29506346
127	30	3020-01-361-3953	73342	29506347
127	31	5365-01-359-9336	73342	29500034
127	32	5330-01-424-6629	73342	23043446
127	33	3040-01-360-6351	73342	29506245
127	34	3110-01-360-7744	73342	29502167
127	35	5305-01-129-6705	72582	11500725
127	36	5330-01-360-7519	73342	29506211
127	37	5365-01-360-1716	73342	29506220
127	38	5365-01-360-1027	73342	29506219
127	39	5365-01-360-1026	73342	29506218
127	40	5310-01-359-8842	73342	29506215
127	41	5340-01-360-1046	73342	29506229
127	42		73342	29507832
127	43	5330-01-360-5980	73342	29506399
127	44	3040-01-360-6352	73342	29507833
127	45	3110-01-360-7500	73342	29506358
127	46	3120-01-360-7536	73342	29506228
127	47	5325-01-360-1675	73342	29502161
127	48	5325-01-360-1674	73342	29502164
127	49	5365-01-360-1732	73342	29502153
127	50	2520-01-361-0568	73342	29502156
127	51	2520-01-361-0567	73342	23042198
127	52	5365-01-360-1731	73342	29508167
127	53	5325-01-360-1673	73342	29506217
127	54	5310-01-359-8843	73342	29506226
127	55	3040-01-361-0572	73342	29506362
127	56	3110-01-360-7496	73342	29506361
127	57	3110-01-360-7499	73342	29506360
127	58	5365-01-360-1036	73342	29506231

CROSS REFERENCE INDEXES

FIGURE AND ITEM NUMBER INDEX

FIGURE NO	ITEM NO	STOCK NUMBER	FSCM	PART NUMBER
127	59	5365-01-360-1030	73342	29505947
127	60	5365-01-360-1029	73342	29505948
127	61	5365-01-360-1028	73342	29505949
127	62	5330-01-360-9039	73342	29506213
127	63	3040-01-360-6349	73342	29506359
127	64	5330-01-430-3477	73342	29515690
127	65	2520-01-361-8284	73342	29503174
127	66	5325-01-360-0960	73342	29507835
127	67	5310-01-359-8789	73342	29507834
127	68	3130-01-360-7571	73342	29506244
127	69	5330-01-360-7518	73342	29503185
127	70		73342	29505639
127	71	5325-01-360-1670	73342	29501192
127	72	3020-01-360-7992	73342	29506075
127	73	3110-00-557-6163	73342	23015799
127	74	2520-01-361-0743	73342	29506074
127	75	2520-01-361-3969	73342	23048735
127	76	2520-01-361-0744	73342	29506073
127	77	5325-01-360-1671	73342	29501195
127	78	5325-01-360-1672	73342	29501191
127	79	5325-01-360-0959	73342	29506072
127	80	5330-01-360-5978	73342	29501189
127	81	5330-01-360-5979	73342	29501190
127	82	3040-01-360-6348	73342	29506068
127	83	3120-01-360-7535	73342	29501026
127	84	5305-01-330-7575	75755	19M7668
127	85		73342	29508168
127	86	5945-01-360-2771	73342	29500888
127	87	5330-01-360-6014	73342	29503380
127	88	5330-01-360-6013	73342	29503382
127	89	4810-01-360-4314	73342	29503564
127	90	5360-01-359-7944	73342	29502195
127	91	2940-01-360-7986	73342	29502194
127	92	5315-01-360-5916	73342	29500873
127	93	5305-01-190-5705	56161	10501380
127	94	2520-01-360-6321	73342	29506243
127	95	4820-01-360-9096	73342	29500870
127	96	5360-01-360-1951	73342	29500871
127	97	5340-01-360-1078	73342	29500872
127	98	5305-01-158-3212	56161	10501882
127	99	5340-01-360-1047	73342	29506230
127	100	5330-01-360-9038	73342	29506212
127	101	5365-01-360-0937	73342	29503360
127	102	5330-01-361-0235	73342	23019664
127	103	4730-01-360-2485	73342	29506241
127	104		73342	29507836
127	105	3010-01-361-5150	73342	29507837
127	106	5305-01-360-1667	73342	29506222
127	107	3110-01-360-7745	73342	29506224
127	108	3040-01-361-0570	73342	29507838
127	109	3020-01-388-2799	73342	29507839
127	110	3120-01-360-7783	73342	29506223

CROSS REFERENCE INDEXES

FIGURE AND ITEM NUMBER INDEX

FIGURE NO	ITEM NO	STOCK NUMBER	FSCM	PART NUMBER
127	111	3020-01-361-2411	73342	29507841
127	112	5325-01-360-0961	73342	29502141
127	113	3020-01-361-3955	73342	29506370
127	114	3040-01-361-0573	73342	29508166
128	1	5340-01-161-6344	78500	REBC16S
128	2		78500	SP-1013
128	3	2520-01-361-5148	78500	983-92-49-496
128	4		78500	CSH5-24-38
128	5		78500	216N14-5A
128	6	2520-01-361-6431	78500	983-92-49-502
128	7		78500	CSH5-24-38
128	8		78500	216N14-5A
129	1	2520-01-357-1585	78500	RF-12611-NFSF-7-780
129	2	4730-01-082-3178	78500	1199-B-3226
129	3	5305-01-407-1612	78500	S-21418-A-2
129	4	5310-01-059-7130	78500	1229-M-1625
129	5	5340-01-394-5380	19207	12420331
129	6	5305-01-439-3258	78500	26X1024
129	7	5310-00-763-8913	96906	MS51967-17
129	8	2520-01-363-8153	78500	A2-3202-A-9621
129	9	2520-01-363-8152	78500	A3-3202-A-9621
129	10	3040-01-363-2386	78500	C23201Q7895
129	11	5365-01-180-2369	78500	1250-E-473
129	12	5330-01-360-5253	78500	A-1205-D-2344
129	13	3120-01-391-2219	78500	1229-T-4570
129	14	3120-01-131-2083	78500	1225K817
129	15	5305-01-392-1634	78500	S-21416-A-2
129	16	5340-01-362-6158	78500	3262W1219
129	17	5330-01-362-3392	78500	1205F2164
129	18	3120-01-362-4364	78500	1229K4119
129	19	3120-01-362-4365	78500	1225K1259
129	20	2530-01-364-4602	78500	1250T1086
129	21	5365-01-362-6149	78500	2203R9846
129	21	5365-01-363-6150	78500	2203S9847
129	21	5365-01-362-6148	78500	2203Q9845
129	22	2530-01-363-2355	78500	3133B7178
129	23		78500	A4333J4118
129	23		78500	A3333J4118
129	24	5305-01-362-4399	78500	10X1563
129	25	5340-01-391-2794	78500	3266-A-1275
129	26	3120-01-362-4371	78500	1229A4161
129	27	3120-01-362-4370	78500	1228J1154
129	28	3020-01-363-2415	78500	2234F1202
129	29		78500	3278Z1118
129	30	3020-01-363-8103	78500	2234E1201
129	31	5365-01-362-5014	78500	2203N9504
129	31	5365-01-362-6151	78500	2203J9500
129	31	5365-01-362-5013	78500	2203M9503
129	31	5365-01-362-6152	78500	2203K9501
129	31	5365-01-362-6153	78500	2203L9502
129	32	5315-01-391-2792	78500	19X1067

CROSS REFERENCE INDEXES

FIGURE AND ITEM NUMBER INDEX

FIGURE NO	ITEM NO	STOCK NUMBER	FSCM	PART NUMBER
129	33	5330-01-362-6141	78500	A1227X1480
129	34	3110-00-100-3611	60038	47686
129	35	3110-00-100-0589	61220	47620
129	36	5325-01-362-6127	78500	1229K3131
129	37	5330-01-362-4993	78500	2297R6648
129	38	5330-01-360-7753	78500	A1205Q2435
129	39	2530-01-360-5954	78500	3219-W-4833
129	40		78500	A-333-J-4118
129	41	5305-01-362-4344	78500	20X2123
129	41	5305-01-362-4345	78500	20X2122
129	42	4730-01-362-5652	78500	2206D1018
129	43	4710-01-392-0326	78500	A-3196-D-1070
129	44	2530-01-363-3764	60038	2297P3838
129	45	5306-01-363-1737	78500	20X1577
129	45	5306-01-363-1749	78500	20X1578
129	46	5330-01-392-1637	78500	5-X-1155
129	47	3120-01-362-4369	78500	1229W4157
129	48	3120-01-362-4367	78500	1228K1155
129	49	3120-01-362-4368	78500	1229Z4160
129	50	3020-01-363-8104	78500	2233J1102
129	51	3120-01-362-4366	78500	1228H1152
129	52	4730-01-391-0769	78500	1850T 124
129	53	3110-00-144-9455	60038	JM716610
129	54	3110-00-144-9793	60038	JM716649
129	55	5330-01-360-5252	78500	A-1205-R-2254
129	56	3040-01-390-8212	78500	A-3213-P-1758
129	57	5330-01-360-5253	78500	A-1205-D-2344
129	58	3120-01-391-2219	78500	1229-T-4570
129	59	3120-01-131-2083	78500	1225K817
129	60	2530-01-363-2388	78500	3111E3255
129	60	2530-01-363-2387	78500	3111D3254
129	61	5310-01-205-2830	78500	1229-Y-1507
129	62	5305-01-390-8485	78500	S2922A2
130	1	5305-01-390-8482	78500	MS212035-2-A
130	2	5310-01-325-7280	78500	1229-C-1511
130	3	2520-01-361-5204	78500	A-3200-W-1869
130	4	3110-01-362-4302	78500	2214H1100
130	5	3110-00-100-0570	60038	29620
130	6	3110-00-100-3568	60038	29685
130	7	5306-01-380-9991	78500	MS212080-2
130	8	5365-01-362-6157	78500	42X1409
130	9	3040-01-363-2384	78500	3235F2164
130	10	3120-01-362-4362	78500	1229X4106
130	11	3020-01-363-2413	78500	2234Q1265
130	12	3120-01-362-4363	78500	1229L4276
130	13	3020-01-363-2414	78500	2233E1123
130	14	2520-01-362-5759	78500	3278X1116
130	15		78500	41102K2-1.95
130	16	3040-01-363-2536	78500	3235H2166
130	17	5310-01-325-7280	78500	1229-C-1511
130	18	5305-01-390-8482	78500	MS212035-2-A
130	19	5310-01-391-5249	78500	40-X-1241

CROSS REFERENCE INDEXES

FIGURE AND ITEM NUMBER INDEX

FIGURE NO	ITEM NO	STOCK NUMBER	FSCM	PART NUMBER
130	20	2520-01-362-5745	78500	A33260F1280
130	21	5330-01-432-2690	78500	A-1205-F-2502
130	22	2530-01-181-3621	78500	2297N3888
130	23	5330-01-362-6102	78500	A1205U2257
130	24	5365-01-362-4497	78500	66589
130	25	3110-00-100-0609	78500	66520
130	26	5305-01-390-8483	78500	MS210035-2-A
130	27	5310-01-333-3561	78500	MWA-510
130	28	3130-01-392-3395	78500	A-3226-A-1275
130	29		78500	2203-K-9761
130	29		78500	2203-L-9762
130	29		78500	2803-B-2784
130	29		78500	2803-E-2787
130	29		78500	2803-D-2786
130	29		78500	2803-C-2785
130	29		78500	2803-S-2775
130	29		78500	2803-A-2783
130	29	5365-01-406-9213	78500	2803-W-2779
130	29		78500	2803-T-2776
130	29		78500	2803-X-2780
130	29		78500	2803-U-2777
130	29		78500	2803-Y-2781
130	29		78500	2803-V-2778
130	29		78500	2803-Z-2782
130	30	3110-00-606-9577	78500	HM813810
130	31	3110-01-022-8163	78500	HN813844
130	32		78500	41633K2
130	33		78500	2803-G-2763
130	33		78500	2803-H-2764
130	33		78500	2803-J-2766
130	34	2520-01-361-5204	78500	A2-3200-W-1869
130	35	5315-00-597-2723	78500	1246D342
130	36	5310-01-363-7164	78500	1229G4401
130	37	5305-01-362-4400	78500	41X1363
130	38	5315-00-880-6027	78500	1199R2176
131	1	2520-01-361-2516	78500	RS-15611-NFSF-4-780
131	2	2530-01-364-4602	78500	1250T1086
131	3	5325-01-362-4998	78500	1229C1121
131	4	2520-01-363-8178	78500	3202B9830R
131	5	2520-01-363-8177	78500	3202A9829L
131	6	5310-01-205-2830	78500	1229-Y-1507
131	7	5305-01-390-8490	78500	S-2924-2-A
131	8	5365-01-180-2369	78500	1250-E-473
131	9		78500	C73201Z7800
131	10		78500	A6333J4118
131	10		78500	A5333J4118
131	11	5305-01-362-4399	78500	10X1563
131	12	5340-01-391-2794	78500	3266-A-1275
131	13	3120-01-362-4371	78500	1229A4161
131	14	3120-01-362-4370	78500	1228J1154
131	15	3020-01-363-2415	78500	2234F1202

CROSS REFERENCE INDEXES

FIGURE AND ITEM NUMBER INDEX

FIGURE NO	ITEM NO	STOCK NUMBER	FSCM	PART NUMBER
131	16		78500	3278Z1118
131	17	3020-01-363-8103	78500	2234E1201
131	18	5365-01-362-6152	78500	2203K9501
131	18	5365-01-362-5014	78500	2203N9504
131	18	5365-01-362-5013	78500	2203M9503
131	18	5365-01-362-6153	78500	2203L9502
131	18	5365-01-362-6151	78500	2203J9500
131	19	5315-01-391-2792	78500	19X1067
131	20	5330-01-362-6141	78500	A1227X1480
131	21	3110-00-100-3611	60038	47686
131	22	3110-00-100-0589	61220	47620
131	23	5325-01-362-6127	78500	1229K3131
131	24	5330-01-362-4993	78500	2297R6648
131	25	5330-01-360-7753	78500	A1205Q2435
131	26	2530-01-360-5954	78500	3219-W-4833
131	27		78500	A-333-J-4118
131	28	5305-01-362-4344	78500	20X2123
131	28	5305-01-362-4345	78500	20X2122
131	29	4730-01-362-5652	78500	2206D1018
131	30	4710-01-392-0326	78500	A-3196-D-1070
131	31	2530-01-363-3764	60038	2297P3838
131	32	5306-01-363-1737	78500	20X1577
131	32	5306-01-363-1749	78500	20X1578
131	33	5330-01-392-1637	78500	5-X-1155
131	34	3120-01-362-4369	78500	1229W4157
131	35	3120-01-362-4367	78500	1228K1155
131	36	3120-01-362-4368	78500	1229Z4160
131	37	3020-01-363-8104	78500	2233J1102
131	38	3120-01-362-4366	78500	1228H1152
131	39	4730-01-391-0769	78500	1850T 124
131	40	3110-00-144-9455	60038	JM716610
131	41	3110-00-144-9793	60038	JM716649
131	42	5330-01-360-5252	78500	A-1205-R-2254
131	43	2530-01-391-3785	78500	A3213-Q-1759
132	1	5305-01-390-8482	78500	MS212035-2-A
132	2	5310-01-325-7280	78500	1229-C-1511
132	3	2520-01-361-5204	78500	A-3200-W-1869
132	4	3110-01-362-4302	78500	2214H1100
132	5	3110-00-100-0570	60038	29620
132	6	3110-00-100-3568	60038	29685
132	7	5306-01-380-9991	78500	MS212080-2
132	8	5365-01-362-6157	78500	42X1409
132	9	3040-01-363-2384	78500	3235F2164
132	10	3120-01-362-4362	78500	1229X4106
132	11	3020-01-363-2413	78500	2234Q1265
132	12	3120-01-362-4363	78500	1229L4276
132	13	3020-01-363-2414	78500	2233E1123
132	14	2520-01-362-5759	78500	3278X1116
132	15		78500	41102K2-1.95
132	16	3040-01-363-2536	78500	3235H2166
132	17	5310-01-325-7280	78500	1229-C-1511
132	18	5305-01-390-8482	78500	MS212035-2-A

CROSS REFERENCE INDEXES

FIGURE AND ITEM NUMBER INDEX

FIGURE NO	ITEM NO	STOCK NUMBER	FSCM	PART NUMBER
132	19	5310-01-391-5249	78500	40-X-1241
132	20	2520-01-362-5745	78500	A32260F1280
132	21	5330-01-432-2690	78500	A-1205-F-2502
132	22	2530-01-181-3621	78500	2297N3888
132	23	5330-01-362-6102	78500	A1205U2257
132	24	5365-01-362-4497	78500	66589
132	25	3110-00-100-0609	78500	66520
132	26	5305-01-390-8483	78500	MS210035-2-A
132	27	5310-01-333-3561	78500	MWA-510
132	28	3130-01-392-3395	78500	A-3226-A-1275
132	29		78500	2203-L-9762
132	29		78500	2203-K-9761
132	29		78500	2803-E-2787
132	29		78500	2803-D-2786
132	29		78500	2803-B-2784
132	29		78500	2803-C-2785
132	29		78500	2803-A-2783
132	29		78500	2803-Z-2782
132	29		78500	2803-S-2775
132	29		78500	2803-T-2776
132	29		78500	2803-U-2777
132	29		78500	2803-Y-2781
132	29		78500	2803-V-2778
132	29		78500	2803-X-2780
132	29	5365-01-406-9213	78500	2803-W-2779
132	30	3110-00-606-9577	78500	HM813810
132	31	3110-01-022-8163	78500	HM813844
132	32		78500	41633K2
132	33		78500	2803-J-2766
132	33		78500	2803-H-2764
132	33		78500	2803-G-2763
132	34	2520-01-361-5204	78500	A2-3200-W-1869
132	35	5315-00-597-2723	78500	1246D342
132	36	5310-01-363-7164	78500	1229G4401
132	37	5305-01-362-4400	78500	41X1363
132	38	5315-00-880-6027	78500	1199R2176
133	1		78500	RSA-1550-869
133	1		78500	RSA-1550-870
133	2	2530-01-271-7084	78500	A-2297-V-5326
133	3	2530-01-361-3966	78500	E4-3276P-16
133	4	5330-01-271-9347	78500	1205-C-2005
133	5		78500	3280K8175
133	6	2530-01-391-0773	78500	83820W8187
133	7	2530-01-389-0350	78500	A-2247-E-1019
133	8	5310-01-391-5248	78500	1227E1487
133	9	2530-01-391-0772	78500	3211H5546
133	10		78500	2297-M-4823
133	10	2530-01-330-5049	78500	2297-A-5331
133	11	5330-01-292-9573	78500	1205-B-2004
133	12		78500	A1-3222-V-2232
133	13	5310-00-964-7811	78500	1729B262
133	14	2530-01-271-7006	78500	A-3280-Z-8190

CROSS REFERENCE INDEXES

FIGURE AND ITEM NUMBER INDEX

FIGURE NO	ITEM NO	STOCK NUMBER	FSCM	PART NUMBER
133	15	5360-00-482-4422	78500	2758W127
133	16	5305-01-357-1656	78500	S255Z
133	17	5310-01-062-3384	78500	1229-S-513-C
133	18	2530-01-367-2382	78500	A1-2297U4597
133	19	5340-01-292-5552	78500	2257-M-1001
133	20		78500	MS208020
133	21		78500	42X1064
133	22		78500	MN308
134	1		78500	RDA-1550-874
134	1		78500	RDA-1550-873
134	2	2530-01-271-7084	78500	A-2297-V-5326
134	3	2530-01-095-3561	50153	11M011
134	4	2530-01-084-6975	98171	9999039
134	5	2530-01-394-8332	78500	X24-3276J-10
134	6	5310-00-809-5998	96906	MS27183-18
134	7	5310-00-808-8019	96906	MS35690-804
134	8	5330-01-271-9347	78500	1205-C-2005
134	9		78500	3280K8175
134	10	2530-01-391-0773	78500	83280W8187
134	11	2530-01-389-0350	78500	A-2247-E-1019
134	12		78500	2297-M-4823
134	12	2530-01-330-5049	78500	2297-A-5331
134	13	5330-01-292-9573	78500	1205-B-2004
134	14		78500	A1-3222-V-2232
134	15	5310-01-391-5248	78500	1227E1487
134	16	2530-01-391-5854	78500	3211G5545
134	17	5310-00-964-7811	78500	1729B262
134	18	2530-01-271-7006	78500	A-3280-Z-8190
134	19	5360-00-482-4422	78500	2758W127
134	20	2530-01-367-2382	78500	A1-2297U4597
134	21	5340-01-292-5552	78500	2257-M-1001
134	22	5305-01-357-1656	78500	S225Z
134	23	5310-01-062-3384	78500	1229-S-513-C
134	24		78500	MS208020
134	25		78500	42X1064
134	26		78500	MN308
135	1		06721	N-30257-A
135	2	4730-01-384-1441	06721	N-20415-PB
135	3	2940-01-395-8931	06721	1048011
135	4	5330-00-172-1919	98343	1509
135	5	3040-01-382-8736	06721	N-20415-NB
135	6	2940-01-385-8931	06721	1048011
135	7	5330-00-172-1919	98343	1509
135	8	4730-00-952-3180	81343	8-6 140137C
135	9	9905-00-999-7370	96906	MS53007-1
135	10	9905-00-999-7369	58536	A-A-52483
135	11		19207	12419865
135	12	4730-00-511-1677	93061	207ACBH-6
135	13	4730-01-095-7717	81343	8-6 100202BA
135	14	4730-01-274-1825	81343	6-6 100202BA
135	15		19207	12420572-006X
135	16	4730-00-125-7979	81343	6-6-6-130425B

CROSS REFERENCE INDEXES

FIGURE AND ITEM NUMBER INDEX

FIGURE NO	ITEM NO	STOCK NUMBER	FSCM	PART NUMBER
135	17	4730-00-249-9714	81343	6-6 130137B
135	18	4820-01-443-5012	06721	N30252B
135	19	4730-01-134-0853	81343	6-6 100103BA
135	20		19207	12420572-008X
136	1	4730-01-134-7759	81343	8-8 100102BA
136	2		19207	12420572-008X
136	3		19207	12420572-006X
136	4	4730-01-096-9127	81343	6-8 100102BA
136	5	4730-00-407-0571	30327	129-B-08X24
136	6		19207	12420739-002
136	7	4730-00-196-1467	32537	902466-22
136	8	2530-01-422-2827	06721	N30257
136	9	4730-01-384-1441	06721	N-20415-PB
136	10	2940-01-385-8931	06721	1048011
136	11	5330-00-172-1919	98343	1509
136	12	3040-01-382-8736	06721	N-20415-NB
136	13	2940-01-385-8931	06721	1048011
136	14	5330-00-172-1919	98343	1509
136	15		19207	12420739-001
137	1	5310-01-369-3332	19207	12414315-006
137	2	5310-01-155-1911	34914	990 3861
137	3	2530-01-332-1326	06721	N-50009
137	4	4730-01-091-2809	81343	8-6 100302BA
137	5	4730-01-091-8032	79470	1468X8
137	6	4730-01-095-7717	81343	8-6 100202BA
137	7	5306-01-266-7779	81495	071 408 32
137	8		19207	12420572-008X
137	9	4730-00-511-1677	93061	207ACBH-6
137	10	4720-01-439-9698	19207	12414694-001
137	11	4720-01-439-9700	19207	12414694-002
137	12	4730-00-439-1722	72915	8040313
137	13	4730-01-158-9201	81343	6-6 010302B
137	14		19207	12420572-006X
137	15	4730-01-134-1279	81343	8-6 100203BA
137	16	4730-01-106-3975	81343	8-6-6 100425BA
137	17	4720-00-443-4746	19207	12420572-004X
137	18	4730-01-086-4064	79470	1469X4X4
137	19	4730-01-245-6925	93061	207ACBHS-4
137	20	4730-00-266-0533	96906	MS35869-22
137	21	4720-01-426-7849	19207	12420062-001
137	22	4730-00-473-8357	81343	4-2 010102S
138	1		19207	124219379-002
138	1	5340-01-378-0022	19207	12414454-001
138	2	4310-01-372-5070	19207	12414369-002
138	3	5340-01-378-0021	19207	12414454-002
138	3		19207	12421379-003
138	4	4820-01-363-2117	06721	N-30256-C
138	5	4310-01-372-4220	0FW39	12414369-001
138	6	4730-00-230-8740	88044	AN914-2D
138	7	5930-01-372-9484	19207	12417381
138	8	4730-01-095-2034	81343	8-8-8 130424BA
138	9	4730-00-081-8313	81343	8-8 130239B

CROSS REFERENCE INDEXES

FIGURE AND ITEM NUMBER INDEX

FIGURE NO	ITEM NO	STOCK NUMBER	FSCM	PART NUMBER
138	10	4730-00-595-3108	30327	122B1-2X1-2
138	11	4820-01-372-8139	06721	N-30261-B
138	12	4730-01-086-4064	79470	1469X4X4
138	13	4730-01-348-6542	93061	209P-8-4
138	14	4730-01-134-7759	81343	8-8 100102BA
138	15		19207	12420572-006X
138	16	4820-00-633-3523	06721	N13526H
138	17	4730-01-115-6643	81343	8-8 100202BA
138	18		19207	12420572-008X
138	19	4730-01-300-9031	93061	272NTA-8-8
138	20	4730-01-363-4266	93061	271NTA-8-8
138	21	4730-01-079-3275	81343	8-8 100302BA
138	22	4730-01-096-3169	81343	6-8 100302BA
138	23	4730-01-102-4123	81343	10-8 100202BA
138	24	4730-00-952-3180	81343	8-6 140137C
138	25	4820-01-360-6152	06721	N-50000
138	26	4730-00-726-1103	81343	6-4 140137C
138	27	4820-01-439-7484	06853	101450
138	28	4730-01-134-1278	81343	6-2 100202BA
138	29	5310-01-167-4064	21969	A 13 DIN125-ST
138	30	5310-01-369-3331	19207	12414315-012
138	31	4730-01-091-9212	81343	4-4-100102BA
138	32	4730-01-096-9128	79470	1468X6X6
138	33	4730-01-274-1825	81343	6-6 100202BA
138	34	4730-00-469-7797	81343	6-6-6 130424B
138	35	5340-01-378-2532	19207	12418278
138	36	4730-00-511-1677	93061	207ACBH-6
138	37	4730-00-266-0534	81343	4-6-010102B
138	38	4730-01-245-6925	93061	207ACBHS-4
138	39	5305-01-387-6177	19207	12414419-136
139	1	4730-00-407-0571	30327	129-B-08X24
139	2	4730-01-102-4123	81343	10-8 100202BA
139	3		19207	12420572-010X
139	4	4730-01-082-8799	81343	10-6 100102BA
139	5	2530-01-360-6198	7P109	599827
139	6	4730-01-115-6643	81343	8-8 100202BA
139	7		19207	12420572-008X
139	8	5310-01-155-1911	34914	990 3861
139	9	5310-01-369-3332	19207	12414315-006
139	10	5306-01-266-7779	81495	071 408 32
139	11		19207	12420572-006X
139	12	4730-01-134-1279	81343	8-6 100203BA
139	13	4730-01-119-6895	79470	1472X8
139	14	5310-01-381-9819	19207	12414308-002
139	15	4730-01-410-8063	0TE27	LNU4222/127
139	16	4730-01-394-4791	0TE27	DPL4
139	17	5305-01-395-0138	19207	12414419-081
139	18	4730-01-245-6925	93061	207ACBHS-4
139	19	4720-01-439-9706	19207	12420064-002
139	20	4730-01-283-8150	93061	159F-4-4
139	21	5340-01-438-9440	0TE27	321620
139	22	4730-00-828-0171	81343	4-2 130140B

CROSS REFERENCE INDEXES

FIGURE AND ITEM NUMBER INDEX

FIGURE NO	ITEM NO	STOCK NUMBER	FSCM	PART NUMBER
139	23	4730-00-230-8740	88044	AN914-2D
139	24	4730-01-351-1567	30780	3104-2-4B
139	25	4730-00-130-4235	81343	8-6 010302B
139	26	4720-01-439-9696	19207	12420062-004
139	27	4720-00-443-4746	19207	12420572-004X
139	28	4730-01-091-9212	81343	4-4-100102BA
139	29	4730-01-234-4802	81343	4-4-4 130424B
139	30	4730-01-086-4064	79470	1469X4X4
139	31	4720-01-439-5563	19207	12420064-001
139	32	4720-01-439-6728	19207	12420064-005
139	33	4730-00-090-0832	81343	4-2 010103B
139	34	4720-01-439-9709	19207	12420063-004
139	35	4720-01-439-9701	19207	12420419-003
139	36	4720-01-439-9708	19207	12420063-002
139	37	4730-01-439-9884	81343	10-4 070102
139	38	4730-01-213-8473	81343	8-6 010103BA
139	39	4730-00-249-9714	81343	6-6 130137B
139	40	4720-01-439-9705	19207	12420419-004
140	1		19207	12420572-008X
140	2	4730-01-134-0856	81343	8-8-4 100425BA
140	3	5310-01-155-1911	34914	990 3861
140	4	5310-01-369-3332	19207	12414315-006
140	5	5340-01-372-0145	19207	12414578
140	6	5310-01-167-4064	21969	A 13 DIN125-ST
140	7	5306-01-K62-5199	19207	12414309-048
140	8	2530-01-384-9002	06721	N-50016A
140	9	4730-01-174-9405	81343	6-4 100302BA
140	10		19207	12420572-006X
140	11	5305-01-334-9657	19207	12414419-104
140	12	5310-01-369-3331	19207	12414315-012
141	1	4730-01-091-2809	81343	8-6 100302BA
141	2	2530-01-360-4446	06721	N-50012
141	3	4730-00-011-2578	96906	MS14314-2X
141	4	4820-01-359-6361	06721	N-20455
141	5	2530-01-439-7482	0FW39	12414411-004
141	6	5310-01-369-3332	19207	12414315-006
141	7	5310-01-155-1911	34914	990 3861
141	8	5306-01-266-7779	81495	071 408 32
141	9		19207	12420572-006X
141	10		19207	12420572-008X
141	11	4730-01-283-1876	81343	6-6-6 100424BA
141	12	4730-01-096-9128	79470	1468X6X6
141	13	5305-01-167-8107	56161	10503847
141	14	4730-01-274-1825	81343	6-6 100202BA
142	1	4730-01-133-9017	81343	8-130109E-S
142	2		19207	12420572-006X
142	3	4730-00-069-1187	81343	6-4 100202BA
142	4	2530-01-360-9193	06721	N-50024
142	5	5306-01-266-7779	81495	071 408 32
142	6		19207	12420572-008X
142	7	4730-01-115-6643	81343	8-8 100202BA
142	8	4730-00-254-6228	81343	6-6 010202B (E1)

CROSS REFERENCE INDEXES

FIGURE AND ITEM NUMBER INDEX

FIGURE NO	ITEM NO	STOCK NUMBER	FSCM	PART NUMBER
142	9	4720-01-429-9897	19207	12420062-003
142	10	5310-01-155-1911	34914	990 3861
142	11	5310-01-369-3332	19207	12414315-006
143	1		19207	12420572-006X
143	2	4730-01-086-2864	81343	6-6 100302BA
143	3		19207	12420572-008X
143	4	4730-01-115-6643	81343	8-8 100202BA
143	5	5306-01-266-7779	81495	071 408 32
143	6	4730-01-134-7759	81343	8-8 100102BA
143	7	2530-01-332-1583	06721	N-50004
143	8	4730-00-254-6228	81343	6-6 010202B (E1)
143	9	4720-01-429-9895	19207	12420062-002
143	10	5310-01-155-1911	34914	990 3861
143	11	5310-01-369-3332	19207	12414315-006
144	1		19207	12420572-008X
144	2	4730-01-095-7717	81343	8-6 100202BA
144	3	5306-01-266-7779	81495	071 408 32
144	4	5310-01-155-1911	34914	990 3861
144	5	4820-01-360-6152	06721	N-50000
144	6	5310-01-369-3332	19207	12414315-006
145	1		19207	12420572-006X
145	2	4730-00-069-1187	81343	6-4 100202BA
145	3	2530-01-383-5209	06721	N-50002
145	4		19207	12420572-008X
145	5	4730-01-134-0856	81343	8-8-4 100425BA
145	6	4730-01-134-7760	81343	6-4-6 100424BA
145	7	5306-01-266-7779	81495	071 408 32
145	8	5310-01-155-1911	34914	990 3861
145	9	5310-01-369-3332	19207	12414315-006
146	1	4720-01-439-6769	19207	12420064-006
146	2	4720-01-430-2719	0FW39	12420062-005
146	3	4730-00-902-8991	93061	149F-6-4
146	4	4730-00-254-6215	81343	8-6 010202BA (E1)
146	5	4730-00-289-4736	81343	6-130139B
146	6	4720-01-439-3201	19207	12420064-009
146	7	4730-01-008-7827	93061	151F-6-4
146	8	4730-00-407-0571	30327	129-B-08X24
146	9	4730-00-254-6229	81343	8-8 010202B
146	10	4720-01-439-6919	19207	12420064-007
146	11	4730-01-378-8084	81343	8-6-8 010424BA
147	1	5310-01-381-9830	19207	12414308-017
147	2	5310-01-155-1911	34914	990 3861
147	3	5340-01-372-0376	0TE27	CPT3
147	4	5340-01-395-8022	0TE27	3222/190PPH
147	5	5340-01-377-2804	19207	12419914
147	6	5306-01-439-0022	19207	12414551-010
147	7	5340-01-377-1643	19207	12419915
147	8	5306-01-266-7779	81495	071 408 32
147	9	5310-01-369-3332	19207	12414315-006
148	1	5305-01-178-7349	56161	10503805
148	2		18076	S630H-16
148	3	5365-01-374-6928	19207	12417975-006

CROSS REFERENCE INDEXES

FIGURE AND ITEM NUMBER INDEX

FIGURE NO	ITEM NO	STOCK NUMBER	FSCM	PART NUMBER
148	4	5310-01-342-2739	15526	DIN 934 ST M6
148	5	5340-01-377-6171	18076	S630H-24
148	6	5310-01-369-9522	19207	12414308-019
148	7	5310-01-381-9819	19207	12414308-002
148	8	5340-01-379-8747	19207	12418303
148	9		18076	S630H-40
148	10	5306-01-369-0765	19207	12414307-064
148	11		18076	S630H-36
148	12	5305-01-299-4602	64678	000933 006058
148	12	5305-01-299-4602	64678	000933 006058
148	13		18076	S630H-32
148	14	5310-01-388-2043	19207	12414570-015
148	15	5305-01-166-0615	56161	10503770
148	15	5305-01-166-0615	56161	10503770
148	16	5340-01-377-1548	18076	S463H-56
148	17	5340-01-427-9810	19207	12420411
148	18	5340-01-423-0972	18076	S630H-20
148	19		18076	S630H-10
148	20	5340-01-377-0893	19207	12419910
148	20	5340-01-439-7766	19207	12419910-001
148	21	5310-01-411-5798	19207	12417963-004
149	22	5305-01-268-9100	19207	12414419-080
149	23		18076	S630H-12
149	1	5340-01-387-9853	19207	12420293
149	2	5310-01-369-3332	19207	12414315-006
149	3	5310-01-155-1911	34914	990 3861
149	4	5305-01-341-8926	15526	933-M8X20
149	5	5340-01-384-9527	19207	12378750
149	6	5306-01-266-7779	81495	071 408 32
149	7	5305-01-149-0867	05523	42051-14
149	8	4730-01-188-3183	81343	6-4 130140C
149	9	5310-00-045-3296	96906	MS35338-43
149	10	5310-00-852-8593	96906	MS35649-103
149	11	2540-01-337-4105	06721	N-30255
149	12	4730-00-011-2304	96906	MS14314-3X
149	13	2530-01-361-8581	78500	461 315 161 0
149	14	4730-00-908-3195	81343	SAE J1508-06
149	15	4730-01-091-8032	79470	1468X8
149	16		19207	12420438
149	17		19207	12420572-008X
149	19	2540-01-388-2781	19207	12417993
149	20		0FW39	12419164-001
149	20	2540-01-390-1042	19207	12417585
149	21	3040-01-377-4289	19207	12419163
149	22	5310-01-160-2032	1FH08	DIN555M8
149	23		96906	MS20392-4P25
149	24	5315-00-234-1861	94135	12Z5056-35
149	25	5340-01-384-3451	19207	12420294
149	26	3120-01-385-4540	19207	12419869
149	29		0FW39	12417518-001
150	1	4730-01-134-0854	81343	6-2 100102BA
150	2	4730-00-247-9105	30780	1-8MR0S

CROSS REFERENCE INDEXES

FIGURE AND ITEM NUMBER INDEX

FIGURE NO	ITEM NO	STOCK NUMBER	FSCM	PART NUMBER
150	3	5355-01-372-8693	06721	KN-20901
150	4	5355-01-372-8692	06721	KN-20900
150	5	4730-01-134-1278	81343	6-2 100202BA
150	6	2530-01-361-2211	06721	N-30263
150	7		19207	12420572-006X
150	8	4730-00-069-1187	81343	6-4 100202BA
150	9	2530-01-383-5846	06721	N30262
150	10	4730-00-511-1677	93061	207ACBH-6
150	11	4730-01-372-4862	0TE27	12510-6
150	12	4730-00-469-7797	81343	6-6-6 130424B
150	13	4730-01-096-9128	79470	1468X6X6
151	1		19207	12420572-006X
151	2		19207	12420572-008X
151	3	4730-00-511-1677	93061	207ACBH-6
151	4	4730-01-091-2809	81343	8-6 100302BA
151	5	4730-01-174-9405	81343	6-4 100302BA
151	6	5930-01-384-9598	19207	12414243
151	7	4820-01-360-6152	06721	N-50000
151	8	5305-01-149-0867	05523	42051-14
151	9	4730-01-274-1825	81343	6-6 100202BA
151	10	5310-01-376-5302	19207	12417975-008
151	11	5310-01-369-3332	19207	12414315-006
151	12	4730-00-293-3592	79470	3226X2
151	13	4730-00-125-7979	81343	6-6-6-130425B
151	14	4730-01-095-7717	81343	8-6 100202BA
151	15	4730-01-283-1876	81343	6-6-6 100424BA
151	16	4730-01-091-8032	79470	1468X8
152	1	4730-00-469-7797	81343	6-6-6 130424B
152	2	4730-01-095-7717	81343	8-6 100202BA
152	3		19207	12420572-008X
152	4	4820-01-360-6152	06721	N-50000
152	5	5305-01-341-8926	15526	933-M8X20
152	6	5340-01-378-3617	19207	12419907
152	7	5310-01-369-3332	19207	12414315-006
152	8	4730-01-274-1825	81343	6-6 100202BA
152	9		19207	12420572-006X
152	10	4730-01-062-2570	81343	6-4 100102BA
152	11	4730-01-091-8032	79470	1468X8
152	12	4730-01-245-6925	93061	207ACBHS-4
152	13	4730-01-174-9405	81343	6-4 100302BA
152	14	4730-01-091-2809	81343	8-6 100302BA
152	15	4730-00-511-1677	93061	207ACBH-6
152	16	4730-01-119-6895	93061	272NTA-8-6
152	17	5305-01-149-0867	05523	42051-14
152	18	5310-01-376-5302	19207	12417975-008
153	1	5340-01-372-4781	19207	12419844
153	2	5310-01-381-9929	84256	ALS3-610-4.2
153	3	4820-01-372-2769	52304	673219
153	4	6695-01-447-4065	52304	673221
153	5		52304	673201
153	6	5305-01-268-3656	15526	DIN933-M6X16-8.8 -A4C

CROSS REFERENCE INDEXES

FIGURE AND ITEM NUMBER INDEX

FIGURE NO	ITEM NO	STOCK NUMBER	FSCM	PART NUMBER
153	7	4730-01-115-7362	81343	8-4 100202BA
153	8		19207	12420572-008X
153	9	4720-00-443-4746	19207	12420572-004X
153	10	4730-01-091-8032	79470	1468X8
153	11	4730-00-511-1677	93061	207ACBH-6
153	12	4730-01-091-2809	81343	8-6 100302BA
153	13	4730-00-469-7797	81343	6-6-6 130424B
153	14	4730-01-085-6577	81343	4-6 100202BA
153	15	4730-01-096-9128	79470	1468X6X6
153	16		19207	12420572-006X
153	17	4730-01-274-1825	81343	6-6 100202BA
153	18	5305-01-385-0754	19207	12414309-022
153	19	5310-01-115-0762	19200	12524631-1
154	1	2530-01-361-5075	06721	N50013D
154	2	5340-01-361-7907	19207	12414388
154	3	5310-01-155-1911	34914	990 3861
154	4	5305-01-341-8926	15526	933-M8X20
154	5	5310-01-363-0740	19207	12414473-014
154	6	5305-01-362-9797	19207	12414419-112
154	7	5305-00-978-9394	96906	MS16997-99
154	8	4730-01-007-5232	96906	MS51525A4
154	9	5330-01-387-9490	81343	J515-4-1
154	10	4730-00-647-3207	96906	MS51504A4
154	11	4710-01-390-5716	19207	12414504-001
154	12	4730-01-381-8927	81343	12-12 430360CA
154	13	5330-01-360-5930	11083	9Y4634
154	14	3020-01-360-6391	11083	7C3179
154	15	5310-01-359-8808	11083	7X0521
154	16	5310-00-763-8901	96906	MS51968-23
154	17	5310-01-098-0624	11083	5P8245
154	18	5305-01-360-1001	11083	6V8336
154	19	5310-00-571-6809	19207	8349323
155	1	2530-01-370-5530	20076	05-10058-00
155	2	2530-01-371-1488	20076	05-10110-00
155	3	5306-01-369-8893	0FW39	12417332-001
155	4	5306-01-369-8892	20076	03-18946-00
155	5	5330-01-389-6028	20076	OR420A
155	6	2530-01-371-5836	20076	05-10107-00
155	7	5310-01-210-0199	19207	12301125
155	8	2530-01-370-5462	62161	T 1001
155	9	5305-00-269-3234	96906	MS90727-58
155	10	5340-01-388-9103	19207	12414420-002
155	11	5310-01-370-0010	19207	12414420-004
155	12	5310-00-480-7606	19207	10938443-2
155	12	5310-00-141-0447	19207	10938443-1
155	13	4820-01-370-2751	52304	673245
155	13	4730-01-370-5378	0FW39	12417916
155	14		52304	5999807
155	15		52304	673994
155	16		52304	673996
155	17		52304	673268
155	18		52304	676200

CROSS REFERENCE INDEXES

FIGURE AND ITEM NUMBER INDEX

FIGURE NO	ITEM NO	STOCK NUMBER	FSCM	PART NUMBER
155	19		52304	673268
155	20		52304	673217
155	21	4460-01-284-2344	52304	599791
155	22	5340-01-369-3358	52304	573222
155	23	5310-00-176-6521	19207	10938444-2
155	23	5310-00-176-6525	19207	10938444-1
155	24	5310-00-835-2037	96906	MS35691-53
155	25		52304	673997
155	26	5330-01-395-1252	52304	673269
155	27		52304	673998
155	28		52304	673999
155	29	5305-01-369-7507	19207	12414475-087
155	30	5310-00-835-2037	96906	MS35691-53
155	31	5305-00-727-2283	80204	B1821BH063F150N
155	32	2640-01-367-5015	17875	VS-1090
155	33	2640-01-098-2029	81348	TYIV/CL1/TRVC8
155	34	2640-00-050-1229	81348	TYV/CL2/TR C1
155	35	5310-01-271-5758	17875	265
156	1	2610-01-356-9098	12195	MSPN32764
157	1	2530-01-149-6787	89619	10QH 310P1
157	2	2530-01-363-4436	78500	A1-3102-U-2881
157	3	2530-00-815-3175	89619	10QH39P1
157	4	5315-01-179-9882	78500	K-2412-Z
158	1	2530-01-378-6001	0FW39	12417884
158	2	5325-01-381-9806	19205	12414675-048
158	3	5305-01-158-0793	56161	10505582
158	4	5999-01-398-4763	19207	12420314
158	5	5306-01-377-1546	19207	12418102
158	6	5360-01-386-6087	19207	12378753
158	7	2530-01-392-2312	0LEB5	7368 429 157
158	8	5306-01-423-9937	0LEB5	0770 002 068
158	9	5310-01-423-3725	0LEB5	0770 023 003
158	10	5310-01-423-3722	0LEB5	0637 009 111
158	11	2530-01-391-9921	0LEB5	7025 454 121
158	12	5310-01-423-3725	0LEB5	0770 023 003
158	13	5306-01-423-9937	0LEB5	0770 002 068
158	14	5310-01-342-2739	15526	DIN 934 ST M6
158	15	5310-00-809-4058	96906	MS27183-10
158	16	5305-01-268-3656	15526	DIN933-M6X16-8.8 -A4C
158	17	5340-01-377-7217	19207	12418248
158	18	2430-01-377-6614	0FW39	12417511
158	19	5355-01-378-3348	0H7H2	2467.263
158	20	5310-01-167-4064	21969	A 13 DIN125-ST
158	21	2530-01-378-5649	19207	12417517
158	22	5305-01-273-6251	15434	C0718103500
158	23	5310-01-381-3281	19207	12414560-018
158	24	2530-01-K64-9258	0FW39	TV950049-001
159	1	5306-01-382-7538	19207	12414307-173
159	2	5306-01-372-3536	19207	12414307-140
159	3	5306-01-387-0075	19207	12414307-144
159	4	5306-01-381-9797	19207	12414307-146

CROSS REFERENCE INDEXES

FIGURE AND ITEM NUMBER INDEX

FIGURE NO	ITEM NO	STOCK NUMBER	FSCM	PART NUMBER
159	5	5310-01-369-6706	19207	12414308-025
159	6		19207	12420323
159	7	2530-01-377-3127	93019	12650 REV C
159	8		93019	12877-KL
159	9	5310-01-155-5396	56161	10501625
159	10	5315-00-013-7228	96906	MS24665-423
159	11	2530-01-384-1284	19207	12414586
159	12	2530-01-372-4250	0LEB5	8098 955 146
159	13	4730-01-K65-0946	0LEB5	0770 020 013
159	14	2530-01-377-6617	19207	12417307
160	1	4730-00-840-7236	96906	MS51527A16
160	2	5330-00-804-5694	96906	MS28778-16
160	3	2530-01-368-9501	14120	B5501-31689-120-150
160	4	4730-00-143-3941	96906	MS51527A6
160	5	5330-01-104-1093	02697	3-906N552-90
160	6	5305-00-978-9394	96906	MS16997-99
160	7	5310-00-571-6809	19207	8349323
160	8	5330-01-059-9593	11083	6D1004
160	9	3040-01-389-7019	0FW39	12414373
161	1	4720-01-444-2333	0FW39	12418041
161	2	5306-01-369-0765	19207	12414307-064
161	3	5310-01-381-9819	19207	12414308-002
161	4	5305-01-178-7349	56161	10503805
161	5	5340-01-377-6171	18076	S630H-24
161	6	5340-01-379-8747	19207	12418303
161	7	5310-01-369-9522	19207	12414308-019
161	8	4710-01-377-6616	19207	12378889-001
161	9	4730-01-447-4312	25281	024S9
161	10	4730-01-212-9613	7Z588	9420
161	11	4720-01-377-6618	0FW39	12418040
161	12	4730-01-447-4313	25281	032S9
161	13		0FW39	12418037
161	14	5330-01-381-9897	19207	12417523-016
161	15		19207	12418045-006
161	16	4820-01-377-3042	19207	12419009
161	17	4730-01-368-9806	7Z588	9410
161	18	4730-01-378-8668	93061	6-M16X1.5F80X-S
162	1	2530-01-399-4207	0LEB5	7632 472 424
162	2	2940-01-387-4397	0LEB5	7632-002-144
162	3	5330-01-387-2165	6V370	0770 032 935
162	4	5306-01-387-2267	0LEB5	7632 140 102
162	5	2915-01-375-7624	0LEB5	7632 141 102
162	6	6680-01-387-4987	0LEB5	7632 319 110
162	7		0LEB5	7632 062 116
162	8	5340-01-378-3990	0LEB5	7633 222 102
162	9	5310-01-369-9522	19207	12414308-019
162	10	5306-01-369-0765	19207	12414307-064
162	11	5340-01-K65-1540	19207	12420848
163	1	5310-01-369-6706	19207	12414308-025
163	2		19207	12417452-001
163	3	5340-01-376-9486	19207	12414592

CROSS REFERENCE INDEXES

FIGURE AND ITEM NUMBER INDEX

FIGURE NO	ITEM NO	STOCK NUMBER	FSCM	PART NUMBER
163	4	5310-01-369-3339	19207	12414308-027
163	5	5306-01-382-7538	19207	12414307-173
163	6	2590-01-378-3023	19207	12420571-001
163	7	2590-01-407-1906	19207	12417897
163	8	2510-01-377-4279	19207	12419270
163	9	5306-01-K65-4338	19207	12421697-004
163	10	5306-01-K65-4337	19207	12421697-003
163	11	5306-01-381-9797	19207	12414307-146
163	12	2590-01-399-0855	19207	12419881
163	13		19207	12418157-001
163	14	5340-01-377-1066	19207	12417908
163	15	5306-01-372-0787	19207	12414307-143
163	16	5306-01-372-3536	19207	12414307-140
163	17	5306-01-K65-4335	19207	12421697-001
163	18	2510-01-377-6603	0FW39	12414510
163	19	5340-01-377-0914	19207	12417907
163	20		19207	12421697-002
163	21	2510-01-377-3124	19207	12414511
163	22	2510-01-377-3040	19207	12417403
163	23	5306-01-377-1544	04368	21237LF
163	24	2590-01-377-6605	19207	12417391
163	25	6220-01-387-4799	0FW39	12417895
163	26	5340-01-420-7613	19207	12420312
163	27	5306-01-377-0750	19207	12414307-147
163	28	2510-01-377-4334	19207	12419916
163	29	6220-01-387-4576	0FW39	12417896
163	30	5340-01-371-9882	19207	12417681
163	31	5306-01-371-7161	19207	12414307-141
163	32	5310-00-241-6666	96906	MS51943-52
163	33	5340-01-377-1609	19207	12417684
163	34	2590-01-426-2347	19207	12414512
163	35	2510-01-439-5301	19207	12417261
163	36	2510-01-439-5269	19207	12417250
163	37	5310-01-369-6706	19207	12414308-025
163	38	5306-01-372-3536	19207	12414307-140
163	39	2510-01-377-6604	19207	12414577
163	40	5340-01-420-7614	19207	12420238
164	1	5340-01-407-5392	19207	12419950-002
164	2	5310-01-369-6706	19207	12414308-025
164	3		19207	12417452-009
164	4	5340-01-376-9486	19207	12414592
164	5	5306-01-K65-4335	19207	12421697-001
164	6	5310-01-369-3339	19207	12414308-027
164	7	5306-01-382-7538	19207	12414307-173
164	8	2590-01-434-5436	19207	12420571-002
164	9	2590-01-407-1906	19207	12417897
164	10	2510-01-377-4279	19207	12419270
164	11	5306-01-K65-4338	19207	12421697-004
164	12	5306-01-K65-4337	19207	12421697-003
164	13	2590-01-399-0855	19207	12419881
164	14		19207	12418157-009
164	15	5340-01-377-1066	19207	12417908

CROSS REFERENCE INDEXES

FIGURE AND ITEM NUMBER INDEX

FIGURE NO	ITEM NO	STOCK NUMBER	FSCM	PART NUMBER
164	16	5306-01-372-3536	19207	12414307-140
164	17	2510-01-377-6603	0FW39	12414510
164	18	5340-01-408-2771	19207	12419950-001
164	19	5340-01-377-0914	19207	12417907
164	20		19207	12421697-002
164	21	5306-01-372-3537	19207	12414307-142
164	22	5310-00-241-6666	96906	MS51943-52
164	23	2590-01-426-2347	19207	12414512
164	24	2510-01-377-3124	19207	12414511
164	25	5306-01-372-0786	19207	12414307-138
164	26	2590-01-434-5435	19207	12419951
164	27	5306-01-377-1544	04368	21237LF
164	28	2510-01-377-3040	19207	12417403
164	29	5340-01-439-0846	19207	12419963
164	30	2590-01-377-6605	19207	12417391
164	31	5340-01-377-1609	19207	12417684
164	32	5306-01-371-7161	19207	12414307-141
164	33	5340-01-371-9882	19207	12417681
164	34	6220-01-387-4576	0FW39	12417896
164	35	5306-01-372-0787	19207	12414307-143
164	36	5306-01-377-0750	19207	12414307-147
164	36	5306-01-386-7853	19207	12414307-139
164	37	6220-01-387-4799	0FW39	12417895
164	38	5340-01-434-8087	19207	12420297-001
164	39	5306-01-390-1141	19207	12414307-150
164	40	5340-01-433-9842	19207	12420297-002
164	41	2510-01-377-4334	19207	12419916
164	42	5310-01-369-6706	19207	12414308-025
164	43	2510-01-411-2471	19207	12418779
164	44	5306-01-386-7853	19207	12414307-139
164	45	2510-01-411-2433	19207	12418778
164	46	5306-01-372-3536	19207	12414307-140
164	47	2510-01-377-6604	19207	12414577
164	48	5340-01-420-7614	19207	12420238
165	1	6220-01-440-4784	0FW39	12420533-001
165	2	5306-01-372-3536	19207	12414307-140
165	2	5306-01-369-0765	19207	12414307-064
165	2	5306-01-369-0765	19207	12414307-064
165	3		0FW39	12420533-002
165	3	6220-01-440-3743	0FW39	12420533-003
165	4	5310-01-369-9522	19207	12414308-019
165	4	5310-01-369-9522	19207	12414308-019
165	4	5310-01-369-6706	19207	12414308-025
165	5	4030-00-185-0487	88044	AN116-18
166	1	4820-01-396-7750	19207	12418831
166	2	4010-01-026-1855	81349	M83420/4-005
166	3	4030-01-209-7478	96906	MS51844-66
166	4	5315-01-396-5839	19207	12418832
166	5	5305-00-059-4568	96906	MS35190-253
166	6	5315-01-398-8682	19207	12418861
166	7	5315-01-395-0140	09332	C7-20-R
166	8	5315-01-394-2736	19207	12418862

CROSS REFERENCE INDEXES

FIGURE AND ITEM NUMBER INDEX

FIGURE NO	ITEM NO	STOCK NUMBER	FSCM	PART NUMBER
166	9	5315-01-395-0142	09332	C7-15-R
166	10	5310-01-369-3339	19207	12414308-027
166	11	5306-01-387-0097	19207	12414307-174
166	12	2510-01-439-5681	19207	12418909
167	1	5306-01-381-9797	19207	12414307-146
167	2	5306-01-372-0786	19207	12414307-138
167	3	6220-01-384-0399	0FW39	12417578
167	4	5310-01-369-6706	19207	12414308-025
167	5	5306-01-377-1072	19207	12414307-066
167	6	6220-01-384-0085	0FW39	12417577
167	7	5306-01-369-8191	19207	12414307-063
167	8	2590-01-434-0592	19207	12420299-002
167	8	2540-01-377-7500	19207	12417982
167	9	5310-01-369-9522	19207	12414308-019
167	10	2540-01-377-6607	0FW39	12417942
167	11	4030-00-185-0487	88044	AN116-18
167	12	5306-01-377-0960	19207	12414307-062
167	13	2540-01-377-7499	19207	12417980
167	14	5305-01-374-1086	19207	12414307-077
167	15	5340-01-406-9697	19207	12417981
167	15	2540-01-434-4542	19207	12420299-001
167	16	5310-01-369-3338	19207	12414308-021
167	17	5306-01-384-3485	19207	12414307-149
168	1	3940-01-379-7371	19207	12418270
168	2	5310-01-369-5703	19207	12414308-004
168	3		19207	12414307-038
168	4	5315-01-387-6180	09332	71001
168	5	5325-01-386-8186	84256	13-4CD
168	6	4010-01-388-3680	84256	50996-8W
168	7	5315-01-387-6191	09332	71002
168	8	5306-01-330-8490	19207	12414307-037
168	9	4010-01-377-0335	19207	12419806
169	1	3940-01-395-0605	19207	12420374
169	2	5315-01-376-0576	0FW39	12417930
169	3	5325-01-386-8186	84256	13-4CD
169	4	4010-01-388-3680	84256	50996-8W
169	5	5315-01-394-2739	19207	12420370-004
169	6	3940-01-395-0606	19207	12420368
169	7	5315-01-394-2743	19207	12420370-003
169	8	5315-00-753-3895	96906	MS16562-256
169	9	5340-01-394-6379	19207	12420367
169	10	3940-01-395-0608	19207	12420371
169	11	5315-01-394-2413	19207	12420370-005
170	1	5325-01-386-8186	84256	13-4CD
170	2	5315-00-753-3895	96906	MS16562-256
170	3	5315-01-394-7292	19207	12420370-001
170	4	5340-01-394-2731	19207	12420348-001
170	5	5315-01-406-7426	19207	12420370-002
170	6	5340-01-394-2737	19207	12420348-002
170	7	4010-01-388-3680	84256	50996-8W
170	8	5315-01-376-0576	0FW39	12417930
171	1	5310-00-282-8830	19207	8694381

CROSS REFERENCE INDEXES

FIGURE AND ITEM NUMBER INDEX

FIGURE NO	ITEM NO	STOCK NUMBER	FSCM	PART NUMBER
171	2	4730-00-172-0028	96906	MS15003-4
171	3	5310-01-369-6706	19207	12414308-025
171	4		19207	12418314
171	5	5306-01-372-3537	19207	12414307-142
171	6	2540-00-047-3926	96906	MS51117-1
171	7	5315-01-369-1346	74410	XB-781-1
171	8	5310-00-771-4911	19207	7714911
172	1	5305-01-149-0867	05523	42051-14
172	2	5310-01-155-1911	34914	990 3861
172	3	5306-01-369-0765	19207	12414307-064
172	4	5310-01-369-9522	19207	12414308-019
172	4	5310-01-369-9522	19207	12414308-019
172	5	2590-01-417-1733	19207	12421269
172	6	5306-01-371-7162	19207	12414307-081
172	7	5340-01-423-0782	19207	12421192
172	8	5305-00-719-5240	80204	B1821BH050F250N
172	9	5310-00-171-2444	96906	MS51922-38
172	10	5310-01-369-3338	19207	12414308-021
172	11	5340-01-423-0897	19207	12421191
172	12	5306-01-389-0139	19207	12414307-070
172	13	5306-01-390-1141	19207	12414307-150
172	13	5306-01-384-3485	19207	12414307-149
172	14	5306-01-372-3536	19207	12414307-140
172	14	5306-01-372-0787	19207	12414307-143
172	15	5310-01-369-6706	19207	12414308-025
172	16	2590-01-443-2213	19207	12420569-003
172	16	2590-01-434-5433	19207	12420569-001
172	17	5310-01-369-6706	19207	12414308-025
172	17	5310-01-369-3332	19207	12414315-006
172	18	4010-01-417-4525	19207	12420552
172	19	5306-01-371-7161	19207	12414307-141
172	19	5310-01-417-3814	73634	16037
172	20	5307-01-416-9968	19207	12420550
172	21	3120-01-369-6733	19207	12417700
172	22	5340-01-421-4196	0FW39	12420486
172	23	2590-01-417-1737	19207	12417891
172	24	3010-01-370-2955	19207	12417889
172	25	5365-12-156-4447	19207	12414675-013
172	26	5315-01-369-3376	19207	12417890
172	27	5315-01-369-4912	19207	12417888
172	28	5325-01-386-8186	84256	13-4CD
172	29	4010-01-388-3680	84256	50996-8W
172	30	2530-01-371-7762	19207	12417886
172	31	5315-00-051-6613	96906	MS16562-162
172	32	3040-01-417-2746	19207	12417885
172	33	5315-01-410-9101	19207	12419835
172	34	2590-01-372-8155	19207	12417692
172	35	2590-01-389-2223	19207	12420270
172	36	5305-01-274-1264	15526	DIN933-M10X35-8. 8-A4C
172	37	5305-01-K64-4066	0FW39	12414419-117
172	38	5310-01-369-6074	19207	12414560-019

CROSS REFERENCE INDEXES

FIGURE AND ITEM NUMBER INDEX

FIGURE NO	ITEM NO	STOCK NUMBER	FSCM	PART NUMBER
172	39	4010-01-423-0892	7S918	F007
172	40	5340-01-424-3550	0PKM9	WCSI-847301
172	41		19207	12421456
173	1	5306-01-386-3966	19207	12414307-145
173	2	5306-01-369-7504	19207	12414551-052
173	3	5310-01-369-6706	19207	12414308-025
173	4	2590-01-374-1844	19207	12417921
173	5	4730-00-172-0034	96906	MS15003-6
173	6	5310-01-368-8667	19207	12414315-011
173	7	2510-01-370-2726	0FW39	12417407
173	8	2510-01-387-8469	0FW39	12417411
173	9	5306-01-372-0786	19207	12414307-138
173	10	5306-01-377-0750	19207	12414307-147
173	11	4730-00-050-4208	96906	MS15003-1
173	12	2590-01-374-3851	0FW39	12417919
173	13	5340-01-369-8172	19207	12417922
173	14	5306-01-371-3099	19207	12417904-002
173	15	5340-01-369-5626	19207	12417395
173	16	2510-01-374-2462	19207	12417405
173	17	5315-01-434-5844	19207	12417964-017
173	18	5315-01-434-0915	19207	12417390
173	19	5310-01-391-7887	81349	D63546/8-06G
173	20	5310-01-371-8419	19207	12418084
173	21		0FW39	12417416
173	22	5315-01-434-5844	19207	12417964-017
173	23	5315-01-434-0915	19207	12417390
173	24	2510-01-364-8303	0FW39	12417277
173	25	5306-01-384-3485	19207	12414307-149
173	26	2510-01-372-8454	19207	12417925
174	1	5340-01-369-5525	19207	12417274
174	2	5310-01-369-6073	19207	12417308-007
174	3	5310-01-369-6074	19207	12414560-019
174	4	5310-01-369-8654	19207	12414474-014
174	5	5340-01-372-0382	81860	25950
174	6	5306-01-371-0876	19207	12378774
174	7	5306-01-381-9941	19207	12414307-079
174	8	5340-01-369-3356	19207	12417273
175	1	2510-01-364-8303	0FW39	12417277
175	1	2510-01-373-7683	0FW39	12417451
175	2	5306-01-371-3099	19207	12417904-002
175	3	5340-01-371-1077	0FW39	12417393
175	4	2510-01-388-1204	19207	12417388
175	5	5310-01-391-7887	81349	D63546/8-06G
175	6	5310-01-371-8419	19207	12418084
175	7	2510-01-388-1196	19207	12419190
175	8	5306-01-369-7504	19207	12414551-052
175	9	5310-01-368-8667	19207	12414315-011
175	10	4730-00-050-4208	96906	MS15003-1
175	11	2590-01-374-1844	19207	12417921
175	12	3120-01-369-8978	0FW39	12417918
175	13	2510-01-372-8454	19207	12417925
176	1	5306-01-372-0786	19207	12414307-138

CROSS REFERENCE INDEXES

FIGURE AND ITEM NUMBER INDEX

FIGURE NO	ITEM NO	STOCK NUMBER	FSCM	PART NUMBER
176	2	5310-01-369-6706	19207	12414308-025
176	3	5310-01-370-9104	19207	12414474-017
176	4	5310-01-246-1387	62445	110 7289
176	5	5340-01-371-1092	19207	12418022
176	6	5340-01-368-5803	0FW39	12418030
176	7	5306-01-369-3263	19207	12418023
177	1	5310-01-369-6706	19207	12414308-025
177	2	2590-01-374-1842	19207	12418280
177	3	5305-01-369-8253	19207	12418012-004
177	4	5306-01-369-8192	19207	12414551-124
177	5	5330-00-406-0883	02697	2-210N674-7
177	6	3040-01-442-3643	19207	12419051
177	7	5310-01-369-8923	19207	12414473-020
177	8	5310-01-369-3339	19207	12414308-027
177	9	2510-01-372-4839	0FW39	12414357
177	10	2590-01-373-5499	19207	12418016
177	11	5306-01-444-0593	19207	12417951-100
177	12	5310-01-369-6073	19207	12414308-007
177	13	5306-01-381-9941	19207	12414307-079
177	14	5306-01-381-9928	19207	12414307-080
177	15	5340-01-383-8847	19207	12418014
178	1	5305-01-371-9850	19207	12418012-001
178	2	5310-01-158-9053	45152	2AW725
178	3	2510-01-372-4839	0FW39	12414357
178	4	5310-01-369-6706	19207	12414308-025
178	5	5306-01-434-0875	19207	12414551-133
178	6	5310-01-369-8923	19207	12414473-020
178	7	5310-01-434-3778	19207	12414315-021
179	1	5310-01-370-0596	19207	12419029
179	2	5340-01-370-0643	81860	25951-1
179	3	3120-01-369-8361	19207	12419026
179	4	5310-01-369-3339	19207	12414308-027
179	5	5340-01-431-8755	19207	12419032
179	6	5340-01-369-0893	81860	25952-1
179	7	5305-01-373-4832	19207	12414307-088
179	8	5340-01-370-7066	19207	12378772
179	9	5310-01-369-3338	19207	12414308-021
179	10	5305-01-369-3264	19207	12414551-126
179	11	2510-01-369-2054	19207	12417652
179	12		19207	12378806
179	13	5306-01-369-8192	19207	12414551-124
179	14	5310-01-155-0057	19207	12417963-014
180	1	2510-01-374-3022	0FW39	12414744
180	2	2510-01-375-6294	0FW39	12415320
180	3	2510-01-375-1901	0FW39	12414915
180	3	2510-01-374-3120	0FW39	12414916
180	4	5305-01-341-8926	15526	933-M8X20
180	5	5365-01-377-1995	0FW39	12414582-004
180	6	2510-01-376-0667	0FW39	12415322
180	6	2510-01-375-7117	0FW39	12415321
181	1		0FW39	12414944
181	2	5306-01-266-7779	81495	071 408 32

CROSS REFERENCE INDEXES

FIGURE AND ITEM NUMBER INDEX

FIGURE NO	ITEM NO	STOCK NUMBER	FSCM	PART NUMBER
181	3	5365-01-377-1995	0FW39	12414582-004
181	4	2510-01-375-7991	0FW39	12415308
181	5	5365-01-433-8467	19207	12421264-001
181	6	2510-01-417-5847	19207	12415050
181	7	5305-01-389-2387	19207	12417959-069
181	8	5340-01-377-7216	19207	12415301
181	9	5305-01-374-2294	19207	12414319-026
181	10	5305-01-389-7965	19207	12414319-024
181	11	3040-01-375-7325	0FW39	12415300
181	12	5340-01-377-1545	0FW39	12415302
181	13		0FW39	TVS20772
181	14	2510-01-375-7990	0FW39	12415305
181	15	2510-01-399-1816	19207	12415145
181	16		19207	12417975-020
181	17	5310-01-370-7447	19207	12414474-010
181	18		0FW39	TVS15400
181	19		19207	12420489
181	20	2510-01-417-9339	19207	12415120
181	21	2510-01-411-3968	19207	12415160
181	22	5365-01-433-7233	19207	12421264-002
181	23	5340-01-376-2889	0FW39	12415306
181	24	5340-01-389-2348	0FW39	12415304
181	25	4910-01-393-4531	0FW39	12415314
181	26	5305-01-374-1790	19207	12414475-068
181	27	5305-01-439-3247	19207	12421366
181	28	4910-01-378-8897	0FW39	12415313
181	29	2510-01-398-5570	19207	12415265
181	30		19207	12417975-020
181	31	5310-01-370-7447	19207	12414474-010
181	32	5340-01-377-7216	19207	12415301
181	33	5305-01-389-2387	19207	12417959-069
181	34	2510-01-375-7993	0FW39	12415312
181	35	5340-01-389-2367	0FW39	T12415311
181	36		0FW39	TVS20772
181	37	5305-01-374-2294	19207	12414319-026
181	38	2510-01-417-6193	19207	12415210
181	39	5340-01-377-1545	0FW39	12415302
181	40	3040-01-375-7325	0FW39	12415300
181	41	5305-01-389-7965	19207	12414319-024
181	42	5306-01-266-7779	81495	071 408 32
181	43	2510-01-376-0667	0FW39	12415322
181	44		19207	12414419-459
181	45	5365-01-377-1995	0FW39	12414582-004
181	46	2510-01-375-6294	0FW39	12415320
181	47	5340-01-376-0672	0FW39	12415307
181	48	2510-01-417-6190	19207	12415240
181	49	5340-01-389-2408	0FW39	T12415310
181	50	2510-01-375-7992	0FW39	12415309
181	51	2510-01-417-6192	19207	12415180
181	52	2510-01-375-7117	0FW39	12415321
182	1		19207	12420420-3X2200
182	2	5305-01-374-5394	19207	12414310-046

CROSS REFERENCE INDEXES

FIGURE AND ITEM NUMBER INDEX

FIGURE NO	ITEM NO	STOCK NUMBER	FSCM	PART NUMBER
182	2	5305-01-374-5394	19207	12414310-046
182	3	5310-12-196-5989	D8286	DIN9021-5,3-100H V-C-B3B
182	4	2540-01-437-1411	19207	12420495-004
182	5		19207	12420420-1X2200
182	6		19207	12420420-2X2200
182	8	2540-01-435-0593	19207	12420495-009
182	9		0FW39	12420420-1X1900
182	10	5305-12-142-5728	19207	1241310-033
182	11	4030-01-433-7225	94222	91-99-111-12
182	12	5340-01-433-7299	94222	K4-2338-12
182	13	5320-00-850-3248	07707	SD52BS
182	14	6110-01-434-1486	19207	12420744
182	16		19207	12414473-008
182	17		19207	12414310-026
182	18	2510-01-437-4202	19207	12420743
182	19	5365-01-374-6928	19207	12417975-006
182	20	5305-01-184-1937	15526	933-M6X12
182	21	2510-01-437-0748	19207	12420494
182	22	5305-01-384-3487	19207	12414310-044
182	23	5310-00-490-4639	96906	MS90724-40
182	24	5970-01-089-7447	23540	411
182	24	5970-01-089-7447	23540	411
182	25	6695-01-433-1897	0FW39	12420958-007
182	26	5305-01-375-2855	0FW39	12414419-056
182	27	5340-01-375-5830	19220	2-M6252-X
182	28	5310-01-370-7447	19207	12414474-010
182	29	5305-01-268-3656	15526	DIN933-M6X16-8.8 -A4C
182	30	5340-01-384-1120	23540	659
182	31		19207	12420420-2X45
182	32	2540-01-437-1413	19207	12420495-008
182	33		19207	12420420-3X175
183	1	5305-01-439-0355	80204	B1834B1205N
183	2	2510-01-375-1492	19207	12418323
183	3	5330-01-389-6109	0FW39	12420421
183	4	5310-01-376-0772	19207	12419831-001
183	5	5330-01-375-2906	0FW39	12417462
183	6	5310-01-115-0762	19200	12524631-1
183	7	5305-01-375-7158	19207	12414310-048
183	8	5305-01-178-7349	56161	10503805
183	9	5310-01-381-9929	84256	ALS3-610-4.2
183	10	2510-01-376-0668	0FW39	12418315-001
184	1	2835-01-406-5474	19207	12420296
184	2	5365-01-374-6928	19207	12417975-006
184	3		19207	12417807-001
184	4	2540-01-375-7404	0FW39	12417805-001
184	5	2540-01-377-4296	0FW39	12417804-001
185	1	5310-01-376-0772	19207	12419831-001
185	2	2510-01-388-5475	0FW39	12420381-002
185	2	2510-01-388-5581	19207	12420381-001
185	3	5355-01-376-3675	0FW39	12417473

CROSS REFERENCE INDEXES

FIGURE AND ITEM NUMBER INDEX

FIGURE NO	ITEM NO	STOCK NUMBER	FSCM	PART NUMBER
185	4	5310-01-381-3878	19207	12417707
185	5	2540-01-378-9352	0FW39	12417502
185	6	5305-01-184-1937	15526	933-M6X12
185	7	2540-01-428-6195	0FW39	12418393
185	8		19207	12421454
185	9	5305-01-375-7158	19207	12414310-048
185	10	5340-01-375-2927	19207	12417815
185	11	5305-01-158-0826	56161	10503657
185	12	5310-01-160-2032	1FH08	DIN555M8
185	13	5320-01-376-0699	0FW39	12418469
185	14	5310-01-155-1911	34914	990 3861
185	15	5305-01-374-1787	19207	12414475-081
185	16	3040-01-375-7396	19207	12417470-003
185	17	5310-01-246-1387	62445	110 7289
185	18	5306-01-375-7128	19207	12417714
185	19	5310-01-376-5302	19207	12417975-008
185	20	5340-01-375-4171	0FW39	12417471-003
185	21	5315-01-375-7279	0FW39	12417494
185	22	5310-12-196-5989	D8286	DIN9021-5,3-100H V-C-B3B
185	23	5310-01-378-3135	19207	12414474-009
186	1	5307-01-385-3377	19207	12417474
186	2	5310-12-196-5989	D8286	DIN9021-5,3-100H V-C-B3B
186	3	5310-01-374-1381	19207	12414315-002
186	4	2540-01-375-7995	0FW39	12417478
186	5	3010-01-375-7322	0FW39	12417476
186	6	5305-01-434-0879	19207	12417959-073
186	7	5340-01-375-6450	0FW39	12419899
186	8	5365-01-375-0493	19207	12417480
186	9	5340-01-375-7257	0FW39	12417479-001
186	10	5305-01-433-6841	19207	12417959-068
186	11		0FW39	12417493
186	12	5340-01-375-9070	0FW39	12417493-003
186	13	5305-01-433-6842	19207	12421284-089
186	14	5310-01-115-0762	19200	12524631-1
186	15	5310-01-370-7447	19207	12414474-010
186	16	3040-01-375-6342	0FW39	12417723
186	17	3040-01-375-7397	0FW39	12417722
186	18	3040-01-375-6343	0FW39	12417724
186	19	3010-01-377-6805	0FW39	12417482
186	20	5330-01-375-2908	0FW39	12417725
186	21	5305-01-375-2855	0FW39	12414419-056
186	22	3010-01-375-7321	0FW39	12417475
186	23	2540-01-375-7994	0FW39	12417477
186	24	3010-01-375-7323	0FW39	12417481
186	25	3040-01-375-6341	0FW39	12417721
187	1	5310-01-378-3135	19207	12414474-009
187	2	5310-12-196-5989	D8286	DIN9021-5,3-100H V-C-B3B
187	3	5340-01-435-3190	19207	12420488
187	4	5305-01-375-2856	19207	12414419-058

CROSS REFERENCE INDEXES

FIGURE AND ITEM NUMBER INDEX

FIGURE NO	ITEM NO	STOCK NUMBER	FSCM	PART NUMBER
187	5	2590-01-434-5221	19207	12420472
187	6	5310-01-436-1664	19207	12420485
187	7	5315-01-376-0576	0FW39	12417930
187	8	5325-01-436-6556	84256	19-8CD
187	9	4010-01-388-3680	84256	50996-8W
187	10	5340-01-421-4196	0FW39	12420486
188	1	5310-01-375-0659	19207	12414473-016
188	2	5330-01-374-2325	96906	MS9955-113
188	3	5365-01-420-8859	19207	12418222
188	4	5310-01-368-8065	19207	12414315-017
188	5	5306-01-379-5092	19207	12418221
188	6	5315-00-187-9393	96906	MS24665-457
188	7	5305-01-372-4711	19207	12414475-115
188	8	5310-01-372-5685	81349	MIL-W-70342/4
188	9	3130-01-372-3044	19207	12418177
188	10	5305-01-372-4712	19207	12414475-125
188	11	5310-01-407-4748	81349	D70329/1-A040
188	12	5310-01-372-3024	19207	12418156
188	13	3120-01-371-7961	19207	12418155
188	14	5365-01-371-9556	19207	12418159
188	15	5310-01-372-6337	19207	12414315-020
188	16	5310-01-411-5797	19207	12418154
188	17	5340-01-371-7258	81860	25920-1
188	18	5365-01-433-7232	19207	12420546
188	19	5340-01-432-9161	81860	25921-1
188	20	5365-01-371-9887	19207	12418158
188	21	5340-01-371-7973	81860	25926
188	22	2510-01-420-9972	19207	12418168
188	23	5306-01-369-8192	19207	12414551-124
188	24	5365-01-371-9888	19207	12418219
188	25	5310-01-167-4064	21969	A 13 DIN125-ST
188	26	2530-01-420-9976	19207	12418216
188	27	5315-01-433-9938	19207	12417962-088
188	28	5305-01-362-9797	19207	12414419-112
188	29	5306-01-369-8193	19207	12414307-078
188	30	5306-01-372-3017	19207	12418153
188	31	5310-01-372-5686	19207	12414582-006
188	32	3120-01-420-8269	19207	12419961
188	33	5340-01-371-7184	19207	12418167
188	34	5310-01-416-4339	81349	D63474/1-27
188	35	5310-01-376-0488	19207	12414474-018
188	36	5310-01-369-3338	19207	12414308-021
188	37	5315-01-447-2297	0FW39	12417962-081
188	38	2590-01-422-7146	19207	12418217
188	39	5330-01-388-4084	96906	MS9770-116
188	40	3120-01-371-8487	19207	12418218
188	41	5315-01-371-7218	19207	12417962-046
188	42	5315-00-187-9382	96906	MS24665-385
188	43	3130-01-372-3043	19207	12418160
189	1	5310-01-381-9819	19207	12414308-002
189	2	5340-01-417-5114	19207	12420641
189	3	4820-01-438-1521	4B046	PP975900

CROSS REFERENCE INDEXES

FIGURE AND ITEM NUMBER INDEX

FIGURE NO	ITEM NO	STOCK NUMBER	FSCM	PART NUMBER
189	4	4720-00-443-4746	19207	12420572-004X
189	5		0TE27	AQ64-DOT-4-SIL
189	6	5310-01-115-0762	19200	12524631-1
189	7	5305-01-178-7349	56161	10503805
189	8	3040-01-429-8345	26952	PP941900
189	9	5310-00-088-1251	96906	MS51922-1
189	10	2510-01-417-2276	19207	12420636
189	11	5340-01-416-7228	19207	12420534-002
189	12	5310-01-372-5685	81349	MIL-W-70342/4
189	13	5305-01-140-2490	05824	M10X1.5X30 DIN93 3 ST
189	14	2510-01-417-2280	26952	PP939900-1
189	15	4340-01-423-0945	19207	12420637
189	16	4730-01-088-7502	81343	4-2-100103BA
189	17	4730-01-113-1791	81343	4-2 100203BA
189	18	5310-01-167-4064	21969	A 13 DIN125-ST
189	19	5310-01-417-1262	19207	12414308-022
189	20	4730-00-196-1482	96906	MS21953-10
189	21		18076	S630H-10
189	22	5305-01-178-7349	56161	10503805
189	23	5306-01-369-0765	19207	12414307-064
189	24	4820-01-418-6393	0FW39	12421167
189	25	4730-01-055-4013	81343	4-2 100202BA
189	26	4730-00-719-2708	81343	2-2-2 130438B
189	27	5315-01-K63-8262	81349	M45952/1-C10-20
189	28	5305-01-231-7406	19207	12414419-135
189	29	5325-01-386-8186	84256	13-4CD
189	30	4010-00-188-1643	84256	LT1504C6-16
189	31	5310-01-369-9522	19207	12414308-019
189	32	5305-01-387-6177	19207	12414419-136
189	33	5305-01-375-2856	19207	12414419-058
189	34	5310-01-386-9041	19207	12417948-001
189	35	2540-01-417-2277	19207	12420729
189	36	5305-01-158-0826	56161	10503657
189	37	2510-01-417-2285	26952	PP938900-1
189	38	5340-01-416-7227	19207	12420534-001
189	39		0TE27	AQ68-DOT-4X2SIL
189	40	5340-01-416-0498	19207	12420585
189	41	5310-01-363-0740	19207	12414473-014
189	42	2590-01-421-1655	26952	PP790900
189	43	2540-01-374-1764	26952	LH50000105
189	44	5310-01-365-7236	19207	12414315-009
189	45	5305-01-274-1264	15526	DIN933-M10X35-8. 8-A4C
189	46	5365-01-423-0888	19207	12420586
190	1		19207	12414419-077
190	2	5365-01-374-9853	0FW39	12378759
190	3	5310-01-155-1911	34914	990 3861
190	4	2510-01-375-8116	0FW39	12417794-001
190	5		19207	12414473-011
190	6	5310-01-342-2739	15526	DIN 934 ST M6
190	7	5305-01-149-0867	05523	42051-14

CROSS REFERENCE INDEXES

FIGURE AND ITEM NUMBER INDEX

FIGURE NO	ITEM NO	STOCK NUMBER	FSCM	PART NUMBER
190	7	5305-01-149-0867	05523	42051-14
190	8	5310-01-426-8406	19207	12420512
190	9	2510-01-388-4276	19207	12420137-001
190	10	2510-01-390-3730	19207	12420137-002
190	11	2510-01-388-1131	19207	12420137-003
190	12	5310-01-376-5302	19207	12417975-008
190	13	2510-01-388-1920	19207	12420137-004
191	1	5306-01-385-6980	19207	12414307-025
191	2	5340-01-439-3757	19207	12421386
191	2	5340-01-439-3758	19207	12421386-001
191	3	5310-01-381-9830	19207	12414308-017
191	4	2540-01-377-3121	0FW39	12417329
191	5	5306-01-384-3431	19207	12414307-024
191	6		19207	12421384-002
191	7		19207	12421384-001
191	8	5340-01-K65-1602	0FW39	12421387-001
191	8	5340-01-K65-1603	0FW39	12421387-002
191	9	5306-01-387-6223	19207	12417958-041
191	10	5310-01-363-0740	19207	12414473-014
191	11	5310-01-369-8654	19207	12414474-014
191	12	5340-01-377-2458	0FW39	12418489
191	13	5310-01-363-4879	19207	12414474-011
191	14	5306-01-377-0274	19207	12418479-001
191	15	2540-01-377-4293	4K133	12418490
191	16	5340-01-416-9965	19207	12418488-001
191	16	5340-01-416-9963	19207	12418488-002
191	17	5310-01-155-1911	34914	990 3861
192	1	2510-01-375-8328	19207	12421151-002
192	2	5330-01-377-1997	0FW39	12417733
192	3		0FW39	12421754
192	4	2510-01-376-2624	0FW39	12418138
192	5	5330-01-375-4280	0FW39	12417784
192	6		19207	12421151-001
192	7	5330-01-375-4279	0FW39	12417734
192	8	5330-01-376-5259	0FW39	12417731
192	9	2510-01-365-7152	0FW39	12414360
193	1	2510-01-413-2594	0FW39	12418136-002
193	2	5330-01-377-1625	19207	12418395-002
193	3		0FW39	12421754
193	4	2510-01-388-4847	0FW39	12417855
193	5	5330-01-377-1535	19207	12417856
193	6	2510-01-413-2594	19207	12418136-001
193	7	5330-01-377-1640	19207	12418395-001
193	8	5330-01-377-1638	19207	12417853-001
193	9	2510-01-364-1626	0FW39	12414356-001
193	10	2510-01-364-8306	2K677	V1921200002
193	11	5330-01-377-1534	19207	12417853-002
194	1	2540-01-436-1180	0FW39	12420806-002
194	2	5330-01-434-2867	S7622	K9639
194	3		19207	12421160-004
194	4	5305-01-374-5394	19207	12414310-046
194	4	5305-01-374-5394	19207	12414310-046

CROSS REFERENCE INDEXES

FIGURE AND ITEM NUMBER INDEX

FIGURE NO	ITEM NO	STOCK NUMBER	FSCM	PART NUMBER
194	5		19207	12421160-006
194	6		19207	12421160-002
194	7	5365-01-374-6928	19207	12417975-006
194	8	5305-01-158-3206	56161	10503516
194	9	5340-01-375-3104	19207	12417717
194	10	5305-01-250-9209	64678	000084006134
194	11	2540-01-376-4001	0FW39	12418392
194	12	5340-01-375-7613	0FW39	12417464
194	13	2540-01-375-3950	0FW39	12417705-001
194	14	2510-01-363-2562	0FW39	12414355-002
194	15	5305-01-375-2860	19207	12414310-014
194	16	5340-01-376-0676	0FW39	12417472
194	17	5310-01-376-4745	19207	12419830-009
194	18	5330-01-K65-1652	0FW39	12420633-002
194	18		0FW39	12417469X540
194	19	5330-01-375-2905	0FW39	12417468
194	20	5305-01-184-1937	15526	933-M6X12
194	21		19207	12421160-003
194	22		19207	12421160-005
194	23		19207	12421160-001
194	24	2540-01-435-6228	0FW39	12420806-001
194	25	2510-01-436-1359	0FW39	12414355-001
194	26	2540-01-375-1903	19207	12417706-001
194	27	5330-01-K65-1499	19207	12420633-001
195	1	5306-01-385-6980	19207	12414307-025
195	2	5310-01-363-0740	19207	12414473-014
195	3	5306-01-440-1293	19207	12417958-006
195	4	5340-01-435-9087	19207	12417378
195	5	2590-01-426-7041	19207	12418476
195	6	2510-01-377-4287	0T1J0	12417328
195	7	5310-01-381-9830	19207	12414308-017
195	8	5970-01-379-7352	4K133	12419875
195	9	5310-01-155-1911	34914	990 3861
195	10	5310-01-363-4881	19207	12414474-015
195	11	5310-01-363-4879	19207	12414474-011
195	12	5305-01-377-0867	19207	12417958-007
195	13	5365-01-436-8308	19207	12417948-004
195	14	2540-01-439-5684	4K133	12417329-001
195	14	2540-01-377-3121	0FW39	12417329
195	14	2540-01-377-3121	0FW39	12417329
195	15	5305-01-377-0696	19207	12414419-128
195	16	5306-01-387-6182	19207	12418479-003
195	17	5306-01-374-1078	19207	12414307-023
195	18	5340-01-439-3347	19207	12421387-004
195	18	5340-01-439-3246	19207	12421387-003
195	18	5340-01-K65-1603	0FW39	12421387-002
195	18	5340-01-K65-1602	0FW39	12421387-001
195	19	5306-01-384-3431	19207	12414307-024
195	20	5340-01-439-3758	19207	12421386-001
195	20	5340-01-439-3757	19207	12421386
195	20	5340-01-439-3757	19207	12421386
196	1	5305-01-341-8926	15526	933-M8X20

CROSS REFERENCE INDEXES

FIGURE AND ITEM NUMBER INDEX

FIGURE NO	ITEM NO	STOCK NUMBER	FSCM	PART NUMBER
196	2	5310-01-376-5302	19207	12417975-008
196	3	5310-01-369-3332	19207	12414315-006
196	4	5365-01-377-1995	0FW39	12414582-004
196	5	5305-01-149-0867	05523	42051-14
196	6	5325-01-380-7889	71286	50S10-15-1AA
196	7	5306-01-266-7779	81495	071 408 32
196	8	5310-01-426-8406	19207	12420512
196	9	2510-01-374-3117	0FW39	12417765
196	9	2510-01-375-1673	0FW39	12417766
196	10	5325-01-145-0105	71286	50S12-1-1AA
196	11	5310-01-375-7175	19207	12417770
196	12	5325-01-049-2049	71286	50R4-1-1AA
196	13	5310-01-155-1911	34914	990 3861
196	14	2590-01-388-5469	19207	12417812
196	14	2590-01-407-9283	19207	12417811
196	15	5330-01-431-7575	0MHJ9	CC3350
196	16	5340-01-387-9831	19207	12419900
196	16	5340-01-383-9824	19207	12419901
197	1	5340-01-375-3042	0FW39	12417526
197	1	5340-01-375-3042	0FW39	12417526
197	2	5340-01-377-1543	0FW39	12417527
197	3	4820-01-443-9908	0FW39	12417562
197	4	5340-01-381-3855	19207	12417599
197	4	5340-01-381-3855	19207	12417599
197	5	4730-01-375-0329	19207	12418065-005
197	6	4730-01-375-1450	19207	12418065-004
197	7	5340-01-384-0869	19207	12418348
197	8	5325-01-433-4746	19207	12420756
197	9	5970-01-089-7447	23540	411
198	1	5310-01-374-6990	19207	12414473-010
198	2	5305-01-374-5394	19207	12414310-046
198	3	2590-01-393-2153	0FW39	12417486
198	4	2510-01-375-3694	19207	12417830-002
198	4	2540-01-375-7119	19207	12417830-004
198	5	2590-01-377-4295	0FW39	12417487
198	6	2510-01-375-1500	19207	12417830-001
198	6	2540-01-374-6939	19207	12417830-003
198	7	5330-01-375-2909	0FW39	12417485
198	8	5310-01-376-0772	19207	12419831-001
198	9	2510-01-376-5661	24825	M-01 383
199	1	5310-01-115-0762	19200	12524631-1
199	2	5310-01-376-0772	19207	12419831-001
199	3	5305-01-375-7158	19207	12414310-048
199	4	2540-01-384-0975	0FW39	12417758
199	5	2510-01-429-1301	0FW39	12418339-001
199	6	5320-01-376-0699	0FW39	12418469
199	7	5305-01-178-7349	56161	10503805
199	8	5305-01-299-4602	64678	000933 006058
199	9	5340-01-407-0493	0FW39	12417489
199	10	2510-01-374-3020	0FW39	12418338
199	11	2510-01-375-8117	0FW39	12418337
200	1		19207	12414575-047

CROSS REFERENCE INDEXES

FIGURE AND ITEM NUMBER INDEX

FIGURE NO	ITEM NO	STOCK NUMBER	FSCM	PART NUMBER
200	2	2540-01-384-0975	0FW39	12417758
200	3	5340-01-407-0493	0FW39	12417489
200	4	5310-01-115-0762	19200	12524631-1
200	5	5305-01-299-4602	64678	000933 006058
200	6	2510-01-377-4333	24825	V-100-12418384-0 01
200	7	2510-01-377-3041	19207	12418384-007
200	8	2510-01-428-9699	19207	12418384-004
200	9	2510-01-377-4286	0FW39	12418383
200	10	5320-01-376-0699	0FW39	12418469
200	11	2510-01-377-3210	19207	12418384-008
200	12	2510-01-428-1691	19207	12418384-005
200	13	2510-01-428-1696	19207	12418384-006
200	14	5305-01-178-7349	56161	10503805
200	15	2510-01-377-6608	19207	12418380
200	16	2510-01-377-4285	0FW39	12418382
200	17	2510-01-377-4283	0FW39	12418379
200	18	2510-01-377-4284	0FW39	12418381
201	1		27797	WM1059
201	2		27797	WM1058
201	3	5310-01-155-1911	34914	990 3861
201	4	5305-01-341-8926	15526	933-M8X20
201	5	2510-01-414-1245	62226	8.5948
201	5	2540-01-399-0878	62226	8.5947
201	6		27797	MM6566
201	6		27797	MM6542L
201	7		27797	MM6515
201	8		27797	MM6538
201	8		27797	MM6558R
201	8		27797	MM6686L
201	9		27797	XP6569
201	9		27797	XP6569
201	10		27797	XP6560
201	11		27797	NN6564
201	12		27797	XP6561
201	12		27797	XP6561
201	13	2540-01-423-2336	29944	F10852
201	14	5365-01-433-1005	29944	00041
201	15	5310-01-367-1804	29944	14219
201	16	5305-01-433-8406	29944	14117
201	17	5365-01-433-1913	29944	14134
201	18	5305-01-420-3156	29944	10767
201	19	2540-01-360-7822	29944	A34438
202	1		27797	WM1059
202	2		27797	WM1058
202	3	5305-01-341-8926	15526	933-M8X20
202	4	5310-01-155-1911	34914	990 3861
202	5		19207	12418370
202	6		54905	861H
202	7	5305-01-268-3656	15526	DIN933-M616-8.8 -A4C
202	8	5305-01-273-6251	15434	C0718103500

CROSS REFERENCE INDEXES

FIGURE AND ITEM NUMBER INDEX

FIGURE NO	ITEM NO	STOCK NUMBER	FSCM	PART NUMBER
202	9	2540-01-360-8046	62226	8.5745
202	10		27797	MM6542R
202	11		27797	XP6560
202	12		27797	XP6569
202	13		27797	MM6686R
202	13		27797	MM6558L
202	14		27797	XP6561
202	15		27797	MM6511
202	16	2540-01-364-4623	29944	F08568
202	17	5305-01-348-8922	29944	14155
202	18	2540-01-360-7822	29944	A34438
202	19	5365-01-433-1913	29944	14134
202	20	5305-01-420-3156	29944	10767
202	21	5310-01-443-2558	29944	10113
202	22	5365-01-433-1005	29944	00041
202	23	5310-01-367-1804	29944	14219
203	1		27797	WM1059
203	2		27797	WM1058
203	3	5305-01-273-6251	15434	C0718103500
203	4	5310-01-155-1911	34914	990 3861
203	5	2540-01-360-8047	62226	8.5744
203	6		27797	MM6542L
203	7		27797	MM6513
203	8		27797	MM6686L
203	8		27797	MM6558R
203	9		27797	XP6569
203	10		27797	XP6560
203	11		27797	XP6561
203	12		27797	XP1113
203	13		27797	MM6465
203	14	2540-01-364-4622	29944	F08569
203	15	5305-01-348-8922	29944	14155
203	16	5310-01-367-1804	29944	14219
203	17	5365-01-433-1005	29944	00041
203	18	5310-01-443-2558	29944	10113
203	19	5365-01-433-1913	29944	14134
203	20	5305-01-420-3156	29944	10767
203	21	2540-01-360-7822	29944	A34438
204	1	5306-01-330-8490	19207	12414307-037
204	2	5305-01-166-0613	56161	10503777
204	3	5310-01-363-0740	19207	12414473-014
204	4	5305-01-395-0143	19207	12414307-039
204	5	5340-01-371-7957	19207	12419267
204	6	5340-01-372-5619	81860	25922
204	7	2540-01-417-4888	19207	12420802
204	8		19207	12420702
204	9		0FW39	12420702-010
204	9	5340-01-416-5312	80244	AA55592-16D
204	10		94222	68-99-216N
204	11		19207	12420702-011
204	12	5330-01-431-7575	0MHJ9	CC3350
204	13	5310-01-369-3337	19207	12414308-018

CROSS REFERENCE INDEXES

FIGURE AND ITEM NUMBER INDEX

FIGURE NO	ITEM NO	STOCK NUMBER	FSCM	PART NUMBER
205	1	2540-01-411-2141	19207	12418330-001
205	1	2540-01-375-1316	19207	12418330
205	1	2540-01-375-1315	19207	12418329
205	1	2540-01-411-2142	19207	12418329-001
205	2	5340-01-410-8398	19207	12418359-001
205	2	5340-01-412-1743	19207	12418359-009
205	2	5340-01-410-8396	19207	12418359-002
205	2	5340-01-411-1620	19207	12418359-010
205	3	5305-01-386-7845	19207	12414419-039
205	4	5340-01-410-8393	19207	12418359-006
205	5	5310-01-064-3613	19207	12414474-008
205	6	5305-01-184-1937	15526	933-M6X12
205	7	5325-00-263-6632	96906	MS35489-6
205	8	5315-00-828-8190	96906	MS24665-69
205	9	5340-01-410-8400	19207	12418371
205	10	5340-01-410-8397	0FW39	12419182
205	11	5310-01-064-3613	19207	12414474-008
205	12	5365-01-374-6928	19207	12417975-006
205	13	5310-01-370-7447	19207	12414474-010
205	14	5340-01-387-6193	94222	97-50-330-12
205	15	5305-01-386-7845	19207	12414419-039
205	16	5310-00-809-4058	96906	MS27183-10
205	17	5340-01-410-8393	19207	12418359-006
205	18		19207	12418357
205	18		19207	12418358
205	19	5305-01-268-3656	15526	DIN933-M6X16-8.8 -A4C
205	20	5365-01-374-6928	19207	12417975-006
206	1	2510-01-375-1900	0FW39	12378484
206	2		19207	12422103
206	3	2540-01-439-5674	19207	12421161
206	4	5306-01-381-9941	19207	12414307-079
206	5	5310-01-369-6073	19207	12414308-007
206	6	2510-01-374-3119	19207	12417337
206	7	2590-01-384-0717	19207	12414742
206	8	2540-01-394-9681	0FW39	12418950
206	9	2510-01-384-0910	19207	12418937
206	10		19207	12417248-001
207	1	2510-01-395-7278	19207	12378483
207	2	5310-01-160-2032	1FH08	DIN555M8
207	3	5340-01-394-6380	19207	12420477
207	4	5306-01-395-1389	19207	12420479
207	5	5310-01-155-1911	34914	990 3861
207	6	5305-01-395-0143	19207	12414307-039
207	7		19207	12422073
207	8	2540-01-439-5674	19207	12421161
207	9	5306-01-372-3536	19207	12414307-140
207	10	5310-01-369-6706	19207	12414308-025
207	11	2510-01-374-3119	19207	12417337
207	12	2590-01-384-0717	19207	12414742
207	13	5340-01-394-6382	19207	12420478
207	14	5310-01-394-5970	96906	MS51553-518

CROSS REFERENCE INDEXES

FIGURE AND ITEM NUMBER INDEX

FIGURE NO	ITEM NO	STOCK NUMBER	FSCM	PART NUMBER
207	15	2540-01-394-9681	0FW39	12418950
207	16	2510-01-384-0910	19207	12418937
207	17	5310-01-395-0816	19207	12414474-023
207	18	5310-01-395-0817	19207	12414560-029
207	19		19207	12419954-179
207	20		19207	12417248-001
207	21	5310-00-241-6666	96906	MS51943-52
207	22	5306-01-377-1544	04368	21237LF
208	1	5310-00-159-1577	96906	MS51988-3
208	2	5340-01-410-9096	19207	12418704
208	3	5330-01-444-2514	19207	12418633
208	4	5330-01-377-5224	19207	12418632
208	5	5340-01-376-1830	19207	12418665-001
208	6	5340-01-058-7384	19207	12418629
208	7	5305-00-068-0509	80204	B1821BH025C125N
208	8	5340-01-393-8500	19207	12418630
208	9	5340-01-420-3525	19207	12418960
208	10	5340-01-396-7237	19207	12418609
208	11	5340-01-389-6992	0FW39	12418631
208	12	5340-01-389-9118	19207	12418628
208	13		19207	12418665-002
208	14		19207	12417246
209	1	5365-01-394-2734	19207	12418616
209	2	5305-00-052-6867	96906	MS24627-37
209	3	5365-01-394-2735	19207	12418620
209	4		19207	12418621-001
209	5	5315-00-234-1863	96906	MS24665-300
209	6	5360-01-439-3864	5V437	95-04-11-TM3
209	7	5310-01-274-3255	96906	MS27183-52
209	8	5360-01-439-2300	5V437	95-04-11-TM2
209	9		19207	12418608
210	1	5340-01-428-4045	19207	12418835
210	1	5340-01-438-8908	0FW39	12414743
210	2	5340-01-429-0964	19207	12418595
210	3	5310-00-941-6019	96906	MS21083N08
210	4		19207	12418597
210	4		19207	12418834-001
210	5		19207	12418568-001
210	6	5305-00-984-6193	96906	MS35206-245
210	7		19207	12418763-002
210	8		19207	12417249
210	9	2510-01-400-2670	19207	12414739
210	10	5315-01-406-9152	09332	D8-50R-303
210	10		19207	12418640-003
210	11	5340-00-489-5684	19220	6411B
210	12		19207	12418640-002
210	13		19207	12418763-001
210	14	5315-01-381-1935	19207	12418764
210	15	5340-01-383-9823	19207	12418775
210	16		19207	12418774-001
210	17		19207	12418763-001
211	1		19207	12415745

CROSS REFERENCE INDEXES

FIGURE AND ITEM NUMBER INDEX

FIGURE NO	ITEM NO	STOCK NUMBER	FSCM	PART NUMBER
211	1		19207	12421503
211	2	5310-00-929-6454	03481	S37B200
211	3	5310-00-637-9541	96906	MS35338-46
211	4	5310-00-773-7618	96906	MS15795-814
211	5	5305-00-992-6147	96906	MS16995-81
211	6		19207	12416360
211	7	5305-00-725-2317	80204	B1821BH038C150N
211	8	5305-00-068-0511	80204	B1821BH038C125N
212	1		19207	12416370
212	2		75535	G-209-1018570
212	3	5325-01-386-8186	84256	13-4CD
212	4	3990-01-418-8756	4L145	79-08
212	5	5315-01-398-2314	4L145	31-29
212	6	4010-01-377-0335	19207	12419806
212	7	5306-01-369-6095	19207	12414307-035
213	1	5305-00-059-3662	96906	MS51958-66
213	2	5310-00-933-8120	96906	MS35338-138
213	3	5310-00-619-1148	96906	MS15795-808
213	4	5310-01-397-8760	03481	S10-266
213	5		19207	12421685
213	6		71643	100SX
213	7		19207	12421519-009
213	8		19207	12421519-008
213	9		55661	A-28
213	10		19207	12421519-007
213	11		19207	12421519-002
213	12		19207	12421519-005
213	13		19207	12421519-015
213	14		19207	12421519-006
213	15		19207	12421519-016
213	16		19207	12421519-010
213	17		19207	12421512
213	18	5310-00-403-5855	03481	S25B331
213	19	5310-00-809-4058	96906	MS27183-10
213	20	5310-01-033-8615	96906	MS51848-50
213	21	5305-00-225-3843	96906	MS90728-8
213	22		19207	12421519-018
213	23		19207	12421519-001
213	24		19207	12421519-011
214	1	5306-00-576-0529	96906	MS35307-337
214	2	5310-00-407-9566	96906	MS35338-45
214	3	5310-00-081-4219	96906	MS27183-12
214	4	3940-01-411-0389	0FW39	12416588
214	5		19207	12421655
214	6	5305-00-914-4171	96906	MS51975-28
214	7	2590-01-K63-1549	19207	12416599
214	8	5340-01-410-7118	19207	12416589
214	9	5305-00-914-3821	96906	MS51975-16
214	10	5310-00-934-0222	25472	S31B350
215	1	2510-01-381-1817	19207	12416380
215	1		19207	12421573
215	2		80063	SM-A-937236S7B4

CROSS REFERENCE INDEXES

FIGURE AND ITEM NUMBER INDEX

FIGURE NO	ITEM NO	STOCK NUMBER	FSCM	PART NUMBER
215	3	5340-01-386-3522	19207	12416407
215	4	5305-01-302-2424	96906	MS24693-C143
215	5	5340-01-384-0113	19207	12416468
215	6	5330-01-385-3769	19207	12416467
215	7		0VK23	S6B321
215	8		19207	12421644
215	9		0FW39	12421421
215	10	5310-00-933-8119	96906	MS35338-137
215	11	5305-00-054-6661	96906	MS51957-37
215	12	5305-00-613-7439	96906	MS24693-C144
215	13	5305-00-717-5467	96906	MS35307-362
215	14	5310-00-984-7042	96906	MS35338-141
215	15	5310-00-595-6057	96906	MS15795-815
215	16	5340-01-386-3479	19207	12416408
215	17	5310-01-283-1104	80063	SM-C-563711-12
215	18		19207	12416591
215	19	5305-00-719-5003	96906	MS51959-84
215	20	5305-00-051-0837	96906	MS51957-96
215	21	5310-00-974-6623	96906	MS35338-140
215	22	5310-00-880-5977	96906	MS15795-811
215	23		80063	SM-C-563711-13
215	24		19207	12421653
215	25		19207	12416541
216	1		19207	12421355
216	2	5305-00-983-8084	96906	MS16997-60
216	3	5310-00-682-5930	96906	MS35340-44
216	4	5310-01-352-9593	80205	NAS1149C0463R
216	5		19207	12421357
216	6	5310-00-413-4838	03481	S25KB211
216	7	5310-00-403-5855	03481	S25B331
216	8		19207	12421358
216	9	5310-00-933-8121	96906	MS35338-139
216	10	5305-00-978-9385	96906	MS16997-62
216	11	5325-01-436-6556	84256	19-8CD
216	12	5315-00-182-9723	96906	MS17987C422
216	13	5325-01-386-8186	84256	13-4CD
216	14	5315-01-406-7423	50620	38-20LP
216	15		19207	12421356
216	16		19207	12421364
216	17		19207	12418763-003
216	18		19207	12421359
217	1	5310-00-426-2651	03481	S10-330
217	2	5365-01-384-6869	0FW39	12416458-001
217	3	5340-01-384-9538	0FW39	12416457
217	4	5310-00-933-8120	96906	MS35338-138
217	5	5305-00-059-3664	96906	MS51958-68
217	6	5305-00-207-8253	96906	MS35307-308
217	7	5310-00-883-9417	96906	MS35338-158
217	8	5410-00-231-6429	80063	SC-C-200154
217	9	5365-01-344-6854	81337	SC-B-200153
217	10	5310-00-177-0994	96906	MS27130S135
217	11	5306-00-182-1514	88044	AN5C26A

CROSS REFERENCE INDEXES

FIGURE AND ITEM NUMBER INDEX

FIGURE NO	ITEM NO	STOCK NUMBER	FSCM	PART NUMBER
217	12	5365-01-344-6855	81337	SM-B-162197
217	13		19207	12416456
217	14	5310-00-625-5756	96906	MS15795-812
217	15	5310-00-807-1469	96906	MS21042-5
218	1	5340-01-386-8153	19207	12416374
218	2		19207	12416368
218	3		19207	12416417
218	4	5365-01-397-5097	0FW39	12416444-002
218	5	5365-01-408-5884	0FW39	12416443
218	6	5315-00-811-9107	96906	MS20392-3C45
218	7	2540-01-398-4505	0FW39	12416376
218	8	5310-00-515-7449	88044	AN960C416L
218	9	5310-00-970-4387	73287	WW519S18
218	10	5315-00-846-8337	96906	MS171659
218	11	3040-01-398-8354	19207	12416447
218	12	5310-00-245-8826	96906	MS16228-10C
218	13	5310-00-614-3505	96906	MS15795-820
218	14	4730-01-398-5654	0FW39	12416563
218	15		19207	12416557
218	16	5315-01-283-0544	96906	MS171661
218	17	5315-00-058-9774	06004	9820378
218	18	2540-01-398-8355	19207	12416449-002
218	19	5365-01-397-5098	19207	12416444-003
218	20	5305-00-180-1991	96906	MS35493-78
218	21	3040-01-406-3930	19207	12416450
218	22	5306-00-720-8260	96906	MS35307-335
218	23	5310-00-625-5756	96906	MS15795-812
218	24	5340-01-386-6208	19220	4303
218	25		80063	SM-C-563711-13
218	26		19207	12421499
218	27	5310-00-241-6638	96906	MS16228-5C
218	28	5306-00-720-8259	96906	MS35307-345
218	29	5306-00-720-8558	96906	MS35307-344
218	30	5305-01-398-1288	19207	12416382
218	31	5310-00-582-5677	96906	MS15795-810
218	32	5340-01-065-8967	80063	SM-B-650093
218	33		19207	12416449-001
218	34	5315-01-305-7675	96906	MS171658
218	35		19207	12416455
218	36	5330-00-248-3847	96906	MS29513-115
218	37	5365-01-398-2344	19207	12416448
218	38		19207	12416566
218	39		19207	12416565
218	40	5306-00-268-2440	96906	MS35751-164
219	1		19207	12421580
219	2		19207	12421525
219	3		19207	12421499
219	4	5306-00-720-8259	96906	MS35307-345
219	5	5306-00-720-8258	96906	MS35307-344
219	6	5306-00-268-2440	96906	MS35751-164
219	7	5315-00-811-9107	96906	MS20392-3C45
219	8	3040-01-398-8354	19207	12416447

CROSS REFERENCE INDEXES

FIGURE AND ITEM NUMBER INDEX

FIGURE NO	ITEM NO	STOCK NUMBER	FSCM	PART NUMBER
219	9		19207	12421524
219	10	5310-00-515-7449	88044	AN960C416L
219	11	5365-01-408-5884	0FW39	12416443
219	12	5310-00-970-4387	73287	WW519S18
219	13	5315-00-846-8337	96906	MS171659
219	14	5310-00-245-8826	96906	MS16228-10C
219	15	5310-00-614-3505	96906	MS15795-820
219	16	2540-01-398-4505	0FW39	12416376
219	17	5365-01-397-5097	0FW39	12416444-002
219	18	5310-01-225-3870	81337	5-4-3101
219	19		19207	12421521
219	20	5315-00-753-3894	96906	MS16562-238
219	21	5315-00-200-3183	96906	MS16562-240
219	22		19207	12416444-004
219	23	5305-01-296-2849	96906	MS24625-47
219	24		19207	12421515
219	25	3120-01-225-3950	81337	5-4-3106
219	26		19207	12421514
219	27		80063	SM-C-563711-13
219	28	5340-01-386-6208	19220	4303
219	29	5306-00-720-8260	96906	MS35307-335
219	30	5310-00-625-5756	96906	MS15795-812
219	31	5310-00-241-6638	96906	MS16228-5C
219	32		19207	12416417
219	33		0SHR6	110F00966
219	34		OSHR6	61S00086
219	35		OSHR6	60P01995
219	36		0SHR6	233W08075
219	37		OSHR6	126S00006
219	38		OSHR6	126E00004
219	39		OSHR6	126E00002
219	40		OSHR6	126E00005
219	41	5305-00-052-9051	96906	MS24630-36
219	42		OSHR6	126E00003
219	43		19207	12421516
219	44		19207	12416565
219	45	4730-01-398-5654	0FW39	12416563
219	46		19207	12416557
220	1	5340-01-384-0377	19207	12416372
220	2		19207	12416367
220	3		19207	12416417
220	4		19207	12421651-001
220	5	5310-00-614-3505	96906	MS15795-820
220	6	5310-00-245-8826	96906	MS16228-10C
220	7	2540-01-398-6969	19207	12416603-002
220	8	5310-01-240-1604	25472	S8B161
220	9		0FW39	12416372-002
220	10		19207	12416384
220	11	5306-00-720-8260	96906	MS35307-335
220	12	5310-00-625-5756	96906	MS15795-812
220	13	5340-01-326-2085	19220	4302
220	14		80063	SM-C-563711-13

CROSS REFERENCE INDEXES

FIGURE AND ITEM NUMBER INDEX

FIGURE NO	ITEM NO	STOCK NUMBER	FSCM	PART NUMBER
220	15	2540-01-399-4208	0FW39	12416603-001
220	16	5305-00-050-9231	96906	MS51957-65
220	17	5310-00-933-8120	96906	MS35338-138
220	18	5310-00-763-3413	96906	MS15795-847
220	19	5306-00-268-2440	96906	MS35751-164
220	20		19207	12421499
220	21	5306-00-720-8258	96906	MS35307-344
220	22	5306-00-720-8259	96906	MS35307-345
220	23	5310-00-241-6638	96906	MS16228-5C
221	1	5305-00-207-8253	96906	MS35307-308
221	2	5310-00-883-9417	96906	MS35338-158
221	3	5310-01-304-8733	96906	MS15795-852
221	4		19207	12416387
221	5	5310-01-108-8404	96906	MS27130-S34
221	6	5310-00-177-0994	96906	MS27130S135
221	7		19207	12416386
221	8	5305-00-082-6721	96906	MS51957-81
221	9	2540-01-386-6897	19207	12416388
221	10	5315-01-048-5055	81349	M45952/1C4-16
221	11	4010-00-188-1643	84256	LT1504C6-16
221	12	5305-00-054-6652	96906	MS51957-28
221	13		19207	12416573
221	14	5310-00-616-3823	25472	S6-160
221	15	5305-00-054-6654	96906	MS51957-30
221	16	5340-00-847-0102	92026	2B
221	17		80063	SM-A-937236S2B1
221	18		19207	12416389
222	1		0SHR6	110F00614
222	2	2510-01-412-8155	0SHR6	60S00478
222	3		0SHR6	60S01354
222	4		0SHR6	141P00075
222	5		0SHR6	60P00477
222	6		0SHR6	147P00040
222	7		0SHR6	138P00002
222	8		0SHR6	147P00041
222	9		0SHR6	139P00003
222	10		0SHR6	108P00002
222	11		0SHR6	139P00002
222	12	5305-00-052-9051	96906	MS24630-36
222	13	2510-01-412-3855	0SHR6	135S00003
222	14		OSHR6	135P00002
222	15		0SHR6	136P00003
222	16		0SHR6	157P00003
222	17		0SHR6	136P00002
222	18		0SHR6	137S00003
222	19		0SHR6	137P00002
222	20		0SHR6	155P00003
222	21		0SHR6	245W10063
222	22		0SHR6	13S00012
222	23		0SHR6	331W08000
222	24		0SHR6	232W08050
222	25		0SHR6	33P00010

CROSS REFERENCE INDEXES

FIGURE AND ITEM NUMBER INDEX

FIGURE NO	ITEM NO	STOCK NUMBER	FSCM	PART NUMBER
222	26		0SHR6	33P00011
222	27		0SHR6	232W08038
222	28		0SHR6	147P00039
222	29		0SHR6	270W10000
222	30	2510-01-412-4611	0SHR6	61S00024
222	31		0SHR6	180S00007
222	32		0SHR6	180P00002
222	33		0SHR6	142P00160
222	34		0SHR6	33P00012
222	35		0SHR6	61S00072
222	36		0SHR6	61P00025
222	37		0SHR6	193P00009
222	38		0SHR6	119S00003
222	39		0SHR6	70P00002
222	40		0SHR6	263W08050
222	41		0SHR6	180P00003
222	42		0SHR6	142P00161
222	43		0SHR6	30P00082
222	44		0SHR6	180P00004
222	45		0SHR6	233W08075
223	1		0SHR6	110F00940
223	2		0SHR6	60S01910
223	3		0SHR6	147P00040
223	4		0SHR6	138P00002
223	5		0SHR6	147P00131
223	6		0SHR6	139P00005
223	7		0SHR6	31P00025
223	8		0SHR6	60S01908
223	9		0SHR6	108P00002
223	10	5305-00-052-9051	96906	MS24630-36
223	11		0SHR6	139P00004
223	12		0SHR6	135S00005
223	13		0SHR6	31P00024
223	14		OSHR6	135P00002
223	15		0SHR6	136P00005
223	16		0SHR6	157P00013
223	17		0SHR6	31P00026
223	18		0SHR6	136P00004
223	19		0SHR6	137S00003
223	20		0SHR6	137P00002
223	21		0SHR6	155P00003
223	22		0SHR6	245W10063
223	23		0SHR6	13S00012
223	24		0SHR6	331W08000
223	25		0SHR6	232W08050
223	26		0SHR6	33P00010
223	27		0SHR6	33P00011
223	28		0SHR6	232W08038
223	29		0SHR6	270W10000
223	30		0SHR6	147P00039
223	31		0SHR6	61S00080
223	32		0SHR6	180S00007

CROSS REFERENCE INDEXES

FIGURE AND ITEM NUMBER INDEX

FIGURE NO	ITEM NO	STOCK NUMBER	FSCM	PART NUMBER
223	33		0SHR6	180P00002
223	34		0SHR6	33P00012
223	35		0SHR6	142P00160
223	36		0SHR6	180S00009
223	37		0SHR6	180P00008
223	38		0SHR6	30P00082
223	39		0SHR6	142P00618
223	40		0SHR6	61S00078
223	41		OSHR6	180S00011
223	42		0SHR6	180P00010
223	43		0SHR6	233W08075
223	44		OSHR6	50P00006
224	1	5310-01-370-5548	96906	MS27130-S148
224	2		19207	12421509-008
224	3		96906	MS24693-144
224	4		19207	12421509-010
224	5		19207	12421509-012
224	6		19207	12421509-011
224	7		19207	12421509-009
224	8		19207	12421509-007
224	9		19207	12421509-002
224	10		19207	12421509-004
224	11		19207	12421509-006
224	12		19207	12421509-005
224	13		19207	12421509-003
224	14		19207	12421509-001
225	1		18876	10280870
225	2		58536	AA50553-I-2-L-2-01-A
225	3		19207	12421529-008
225	4		19207	12421529-010
225	5		0FW39	12416413
225	6		81337	5-4-4876
225	7	5975-00-539-6914	81337	5-4-4875
225	8	5940-00-926-8162	81349	PB08NA02
225	9	5940-00-937-5237	81349	PB08NA01
225	10		19207	12421497-002
225	11		19207	12421529-009
225	12		19207	12421497-001
225	13	5310-00-934-9748	96906	MS35649-244
225	14	5310-00-933-8118	96906	MS35338-135
225	15	8935-00-842-6316	96906	MS3102R18-11SC
225	16	5935-01-175-8419	96906	M25043-18DA
225	17	5305-00-054-5651	96906	MS51957-17
225	18	5310-00-595-6211	96906	MS15795-803
225	19	5935-00-828-6550	96906	MS3102R18-10S
225	20	5935-01-092-1049	96906	MS3452W14S-7P
225	21	5935-01-181-6651	96906	MS25043-14DA
225	22		81345	UL514A2.25X4.25
225	23		81348	WS896/2-03A-G
225	24		19207	12421529-012
225	25		19207	12421529-011

CROSS REFERENCE INDEXES

FIGURE AND ITEM NUMBER INDEX

FIGURE NO	ITEM NO	STOCK NUMBER	FSCM	PART NUMBER
225	26	5975-00-894-9234	56501	H0221
225	27		58536	AA50553-I-2-L-2-03-A
225	28		19207	12421529-003
225	29		58536	AA50553-I-2-L-2-06-A
225	30		19207	12421529-006
225	31		19207	12421529-002
225	32	5310-00-177-7628	80205	NAS1329S3B130
225	33		19207	12421664-001
225	34		19207	12421663-002X
225	35	5340-00-374-1831	56501	65
225	36	5305-01-296-2849	96906	MS24625-47
225	37	5305-00-059-3666	96906	MS51958-70
225	38	5930-00-126-0527	91929	1LS10
225	39		19207	12421529-007
225	40		81348	WS896/2-06A-G
225	41		19207	12421589
225	42	5305-00-082-6721	96906	MS51957-81
225	43	5310-00-809-4058	96906	MS27183-10
225	44		19207	12421508
226	1		0FW39	12421506-006
226	2		19207	12421507-005
226	3	5305-00-054-6670	96906	MS51957-45
226	4	5310-00-933-8119	96906	MS35338-137
226	5	5310-00-880-5978	96906	MS15795-807
226	6	5325-01-439-2388	78276	AKS7-832-80
226	7		0FW39	12421506-005
226	8		0FW39	12421506-001
226	9		19207	12421507-001
226	10		0FW39	12421506-003
226	11		0FW39	12421506-004
226	12		0FW39	12421506-002
226	13		19207	12421507-004
226	14		19207	12421507-003
226	15		19207	12421507-002
227	1	5305-00-054-5651	96906	MS51957-17
227	2	5310-00-933-8118	96906	MS35338-135
227	3	5930-01-279-4428	91929	V31D8
227	4	5325-01-435-6359	98749	9375410-7
227	5		19207	12421682
227	6	5310-00-619-1148	96906	MS15795-808
227	7	5310-00-933-8120	96906	MS35338-138
227	8	5305-00-059-3661	96906	MS51958-65
227	9	5310-00-938-2012	96906	MS35650-344
227	10	5310-00-595-6211	96906	MS15795-803
227	11	5310-00-982-6814	96906	MS21044C08
227	12	5310-00-880-5978	96906	MS15795-807
227	13		19207	12421681
227	14	5305-00-054-6670	96906	MS51957-45
228	1		19207	12421662-002
228	2	6240-00-060-4707	58451	PL1309

CROSS REFERENCE INDEXES

FIGURE AND ITEM NUMBER INDEX

FIGURE NO	ITEM NO	STOCK NUMBER	FSCM	PART NUMBER
228	3		19207	12421662-001
229	1	5975-00-894-9234	56501	H0221
229	2		19207	12421529-004
229	3		58536	AA50553-I-2-L-2-03-A
229	4	6210-00-727-6418	58536	A-A-1535 TY1
229	5		19207	12421529-005
229	6	6240-00-152-2987	08108	F40CW
229	7	5305-01-296-2849	96906	MS24625-47
229	8		19207	12421568
229	9		59730	5712
230	1	6220-00-741-1843	96906	MS35423-4
230	1	6220-00-113-0986	96906	MS35423-3
230	2	5305-00-984-6208	96906	MS35206-261
230	3	6220-00-299-7426	96906	MS35421-2
230	3	6220-00-299-7425	96906	MS35421-1
230	4	6240-00-155-8717	81348	W-L-00111/60
230	5	5305-00-059-3661	96906	MS51958-65
230	6	5310-00-933-8120	96906	MS35338-138
230	7		0FW39	12421469
231	1		19207	12421505
231	2	5930-00-655-4247	96906	MS24524-22
231	3	5310-00-616-2973	96906	MS25082-21
231	4	5310-00-184-8977	96906	MS35338-98
231	5	5310-00-905-5454	96906	MS35333-121
231	6	5930-00-615-7952	96906	MS25223-2
231	7	5925-00-399-5055	77342	W23X1A1G-20
231	8	5925-00-074-9180	77342	W23X1A1G-5
231	9	5305-00-059-3658	96906	MS51958-62
231	10		19207	8501 KX13V53
231	11		0AOE9	ECU-PMTA
231	12	5310-00-880-5978	96906	MS15795-807
231	13	5310-00-933-8119	96906	MS35338-137
231	14	5305-00-054-6676	96906	MS51957-51
231	15	5305-00-054-6673	96906	MS51957-48
231	16		08556	8501-KX13V20
231	17	5935-01-362-6592	56365	8501NR82
231	18	5325-01-357-0699	84256	AKS7-832-130
231	19		19207	12421565
231	20	5930-00-655-4241	96906	MS24524-23
231	21		19207	12416414
232	1		66842	G3042MB3200CU
232	2		66842	6650007
232	3		66842	5820044
232	4		66842	QJ23B200X
232	5		66842	9160078
232	6		66842	5400437
232	7		66842	9160085
232	8	5925-01-271-0695	39572	Q350
232	9	5925-00-124-5015	66842	Q330
232	10	5925-01-097-2535	81348	WC375/05-002
232	11	5925-00-413-1210	81348	WC375/05-001

CROSS REFERENCE INDEXES

FIGURE AND ITEM NUMBER INDEX

FIGURE NO	ITEM NO	STOCK NUMBER	FSCM	PART NUMBER
232	12	5305-00-082-6721	96906	MS51957-81
232	13		19207	12416511
232	14	5310-00-933-8121	96906	MS35338-139
232	15	5310-00-827-8976	03481	S25B200
233	1	2930-01-411-3967	0FW39	12416602
233	2	5310-00-929-6452	80063	SM-C-563711-2
233	3	5310-00-933-8120	96906	MS35338-138
233	4	5310-00-763-3413	96906	MS15795-847
233	5		19207	12421551
233	6		62292	W2E 200-HH86-01
233	7	5305-00-993-1848	96906	MS35207-265
233	8		81348	A-A-50553-1-2-B-1-01-A
233	9		19207	12416357-001
233	10		0FW39	12421665-001
233	11		19207	12416357-002
233	12	5305-00-207-8253	96906	MS35308-308
233	13	5310-00-933-8121	96906	MS35338-139
233	14	5310-00-582-5677	96906	MS15795-810
233	15	5325-01-350-0114	84256	AKS7-428-165
233	16	5305-00-021-3616	96906	MS35307-305
234	1		19207	12421687
234	2	5940-00-937-5237	81349	M55149/08-NA-01
234	3		19207	12421690
234	4	5940-00-926-8162	81349	M55149/08-NA-02
234	5	5310-00-773-7618	96906	MS15795-814
234	6	5310-00-245-3612	96906	MS35650-3384
234	7	5310-00-984-7042	96906	MS35338-141
234	8	5307-01-111-9509	80205	NAS1454C6-0300
234	9	5305-00-989-7435	96906	MS35207-264
234	10	5310-00-933-8120	96906	MS35338-138
234	11	5310-00-014-5850	96906	MS27183-42
234	12		19207	12421689
234	13	5310-00-881-1616	80205	NAS1330S3B166
234	14	5935-01-103-6064	96906	MS90558C44412P
234	15	5305-00-171-2094	96906	MS51958-84
234	16	5935-01-093-5199	96906	MS90558C44412S
234	17	5310-00-582-5677	96906	MS15795-810
234	18	5310-00-933-8121	96906	MS35338-139
234	19	5310-00-400-5503	96906	MS35650-3254
235	1		19207	12421656
235	2	5975-01-382-5358	19207	12416354
235	3	5310-00-881-1616	80205	NAS1330S3B166
235	4		19207	12421659
235	5	5310-00-014-5850	96906	MS27183-42
235	5	5310-00-014-5850	96906	MS27183-42
235	6	5310-00-933-8120	96906	MS35338-138
235	6	5310-00-933-8120	96906	MS35338-138
235	7	5305-00-054-6670	96906	MS51957-45
235	7	5305-00-054-6670	96906	MS51957-45
235	8	5340-01-410-9095	19207	12416502
235	9	5310-00-934-9748	96906	MS35649-244

CROSS REFERENCE INDEXES

FIGURE AND ITEM NUMBER INDEX

FIGURE NO	ITEM NO	STOCK NUMBER	FSCM	PART NUMBER
235	10	5310-00-933-8118	96906	MS35338-135
235	11		0FW39	12422254
235	12	5935-01-176-1708	96906	MS25043-22DA
235	13	5305-00-983-6730	96906	MS35206-218
235	14	5935-00-725-0887	96906	MS3102R22-23P
235	15		19207	12421608
235	16	5310-00-881-1616	80205	NAS1330S3B166
235	17		19207	12421510
236	1		19207	12421457
236	2	9905-01-388-3659	19207	12416546
236	3	9905-01-387-3975	19207	12416548
236	4	9905-01-388-7836	19207	12416551
236	5	9905-01-388-2276	19207	12416550
236	6	9905-01-387-7439	19207	12416547
236	7	9905-01-387-7385	19207	12416549
236	8		0FW39	12415763
236	9		19207	12416481-001
236	10		19207	12416481-002
236	11	9905-01-400-1415	19207	12416554
236	12		19207	12416552-001
236	13	9905-01-410-8866	19207	12416555
236	14		19207	12416552-002
236	15		19207	12416576
236	16		19207	12421458
237	1	5310-01-369-6706	19207	12414308-025
237	2	5340-01-386-8504	19207	12419014
237	3	5340-01-387-5389	19207	12419018
237	4	4010-01-386-8180	7S918	F002
237	5	5306-01-372-0787	19207	12414307-143
237	6	5306-01-371-7161	19207	12414307-141
237	7	2590-01-379-4568	0EJ14	51954
237	8	6105-01-398-1913	0EJ14	13162
237	9	4820-00-637-2576	57733	47200
237	10	5315-01-197-0810	0EJ14	3182
237	11		0EJ14	9804
237	12		0EJ14	3325
237	13	2520-01-344-9376	0EJ14	11954
237	14	5355-01-374-8409	0EJ14	3365
237	15	5360-01-345-5384	0EJ14	2322
237	16	5306-01-346-5613	0EJ14	11969
237	17	3040-01-374-5548	0EJ14	12376
237	18	5360-01-225-9676	0EJ14	2319
237	19	3110-01-228-7663	0EJ14	81434
237	20		0EJ14	3485
237	21	3040-01-375-1571	0EJ14	12719
237	22	5315-01-223-1159	0EJ14	3263
237	23	2520-01-346-0053	0EJ14	12088
237	24	5365-01-224-2305	0EJ14	9854
237	25	5330-01-267-9017	0EJ14	9853
237	26	2530-01-345-0815	0EJ14	12377
237	27	5330-01-268-0914	0EJ14	9851
237	28	5365-01-224-2304	0EJ14	9852

CROSS REFERENCE INDEXES

FIGURE AND ITEM NUMBER INDEX

FIGURE NO	ITEM NO	STOCK NUMBER	FSCM	PART NUMBER
237	29	5310-01-223-7136	58864	11486
237	30	5330-01-357-0846	0EJ14	9612
237	31	4810-01-375-1207	0EJ14	12543
237	32	4820-01-375-3497	0EJ14	70040
237	33		0EJ14	9628-G
237	34		0EJ14	9629-G
237	35		0EJ14	9955
237	36		0EJ14	9842
237	37		0EJ14	9839
237	38	5305-01-345-1702	0EJ14	1279-P
237	39	5305-01-347-5242	0EJ14	1270
237	40	5330-01-359-2151	0EJ14	9972
237	41		58864	9637
237	42	2540-01-394-9689	0EJ14	73169
237	43	5305-01-344-3859	0EJ14	1402
237	44	5310-01-161-2527	0EJ14	1495
237	45	5310-01-161-7311	0EJ14	1498
237	46	5305-01-163-6473	0EJ14	1376
237	47	5310-01-162-5737	0EJ14	1388
237	48	3040-01-376-4546	0EJ14	12726
237	49	5330-01-269-6079	0EJ14	9844
237	50	3020-01-375-1522	0EJ14	12375
237	51	2530-01-251-5296	0EJ14	11603
237	52	2530-01-220-2083	0EJ14	3159
237	53	3950-01-413-3666	0EJ14	13247
237	54		0EJ14	9848
237	55		0EJ14	9675
237	56	3110-01-375-7194	0EJ14	81433-G
237	57	3040-01-413-3829	0EJ14	13160
237	58		0EJ14	9897
237	59	3020-01-413-0077	0EJ14	13148
237	60	5305-00-638-8920	80204	B1821BH038C225N
237	61	5310-01-166-3657	0EJ14	1395
237	62	3010-01-375-2123	0EJ14	12730
237	63	3040-01-375-3755	0EJ14	12706
237	64		0EJ14	3043
237	65		0EJ14	3055
237	66	3010-01-374-7584	0EJ14	12729
237	67	4030-01-255-2753	75535	S-421-1/2
237	68	3040-01-413-3889	0EJ14	13161
237	69	5305-01-414-3650	0EJ14	1309
237	70	4730-01-375-1448	0EJ14	3448
237	71	5315-00-814-3531	96906	MS16562-50
237	72	3040-01-399-0842	0EJ14	13261
237	73	3020-01-399-0840	0EJ14	12930
237	74	3120-01-397-8140	0EJ14	81626
237	75	5360-01-397-6860	0EJ14	3540
237	76	5315-01-446-5592	0EJ14	13260
237	77	5975-01-398-6915	0EJ14	13262
237	78	5975-01-398-6914	0EJ14	13263
238	1	5310-01-369-3338	19207	12414308-021
238	2	5306-01-381-9941	19207	12414307-079

CROSS REFERENCE INDEXES

FIGURE AND ITEM NUMBER INDEX

FIGURE NO	ITEM NO	STOCK NUMBER	FSCM	PART NUMBER
238	3	2590-01-K65-1494	19207	12419034-001
238	4	5340-01-387-2170	19207	12419202
238	5	3020-01-387-5008	19207	12418448
238	6	2835-01-406-3776	19207	12418450
238	7	3110-01-392-0167	0FW39	12418449
238	8	3040-01-387-7055	19207	12419037
238	9	5315-00-853-3814	96906	MS16562-146
238	10	5310-01-369-9522	19207	12414308-019
238	11	3815-01-387-5655	0FW39	12417386
238	12	5306-01-369-0765	19207	12414307-064
238	13	5340-01-386-9663	19207	12417644
238	14	5315-00-058-6115	96906	MS16562-142
238	15	5315-01-343-7322	0TLH4	25-05
238	16	5325-01-386-8186	84256	13-4CD
238	17	4010-01-388-3680	84256	50996-8W
238	18	3120-01-387-9781	19207	12417457
238	19	3040-01-393-0945	19207	12417458
238	20	4730-00-050-4208	96906	MS15003-1
238	21	4730-00-172-0025	96906	MS15003-3
238	22	5310-01-369-6706	19207	12414308-025
238	23	3040-01-387-4726	19207	12417459
238	24	5306-01-381-9797	19207	12414307-146
238	25	2540-01-420-7928	0FW39	12420537
238	26	5305-01-373-4832	19207	12414307-088
238	27	5975-01-387-4800	19207	12418458
238	28	5306-01-387-3083	19207	12414309-046
238	29	5975-01-387-5066	19207	12418456
238	30	5340-01-386-8493	19207	12419015
238	31	5310-01-365-7236	19207	12414315-009
238	32	5340-01-387-0556	19207	12419833
238	33	3040-01-387-7220	19207	12418455
238	34	5310-01-372-5686	19207	12414582-006
238	35	5310-01-368-8667	19207	12414315-011
238	36	5340-01-387-4083	0FW39	12419834-003
238	36	5340-01-387-4083	19207	12419834
238	37	3040-01-387-7213	19207	12418482
238	38	3120-01-388-1568	19207	12418484
238	39	5340-01-421-4197	0FW39	12420525
238	40	5306-01-377-1072	19207	12414307-066
239	1	5305-01-381-1542	8N900	379451
239	2	5330-01-381-2357	8N900	35P-74
239	3	4730-01-383-5730	8N900	379486
239	4	5330-00-804-5695	96906	MS28778-6
239	5	5305-01-425-9997	8N900	379453-10
239	6	5930-01-385-4301	8N900	379502
239	7		8N900	329075-1X
239	8	2520-01-362-3573	11757	276XMFJX-D5XK
239	9	3110-00-100-3532	58275	1690071
239	10	3020-01-362-3525	11757	5-P-915
239	11	5310-00-238-7560	11757	14P15
239	12	5315-01-361-6947	11757	500597-16
239	13	5330-01-361-6959	11757	28-P-191

CROSS REFERENCE INDEXES

FIGURE AND ITEM NUMBER INDEX

FIGURE NO	ITEM NO	STOCK NUMBER	FSCM	PART NUMBER
239	14	3040-01-362-1772	11757	9-P-69
239	15	5330-01-443-8050	11757	28-P-190
239	16	5330-01-362-0664	11757	379505
239	17	5365-01-361-8369	11757	379484
239	18	5325-01-145-1179	11757	378849
239	19	5310-01-044-0774	11757	378811
239	20	5330-01-361-6962	11757	22-P-92
239	21	5305-01-230-1659	45152	2CX333
239	22	2520-01-362-3511	11757	34-P-114
239	23	4730-01-365-9170	11757	379487
239	24	4810-01-360-2353	11757	379377-2
239	25	5330-00-483-2296	96879	28-P-193
239	26	2520-01-362-3512	11757	329073-1X
239	27	5306-01-145-6949	11757	378429-8
239	28	5330-01-044-6592	11757	28-P-119
239	29	4730-01-221-0821	11757	379231
239	30	5365-01-221-0820	11757	379242
239	31	5330-00-483-2296	96879	28-P-192
239	32	5365-00-174-8678	96906	MS3217-1137
239	33	3040-01-362-3515	11757	21-P-482
239	34	5305-01-051-9899	95019	378447-8
239	35	5330-01-382-9753	11757	22-P-53 NON-ASBE STOS
239	36	3110-00-516-5490	11757	550010
239	37	5325-01-361-8375	11757	378895
239	38	5365-01-361-8404	11757	4-P-147
239	39	5365-00-184-8678	96906	MS3217-1137
239	40	5330-00-832-9514	11757	28-P-120
239	41	2520-01-222-0967	11757	328895X
239	42	3010-01-043-0932	11757	378760
239	43	5330-01-064-6284	11757	28-P-121
239	44	2520-01-044-2482	11757	328676X
239	45	2520-01-221-0898	11757	379133
239	46	9505-01-222-7564	11757	378856
239	47	5315-00-237-7589	11757	500007-29
239	48	3040-01-362-1775	11757	3-P832
239	49	2520-01-361-5190	11757	379485
239	50	3020-01-043-6178	11757	378684
239	51		11757	560972
239	52	3020-01-371-8206	11757	2-P-682
239	53	3120-01-361-9000	11757	31-P-70
239	54	5325-01-145-1592	11757	378608
239	55		11757	560972
239	56	5365-01-043-7954	11757	14-P-49
239	57	5325-01-145-1592	11757	378608
239	58	3020-01-043-0193	11757	2-P-458
239	59	5360-01-043-6239	11757	37-P-39
240	1	4730-01-374-2959	82484	192.518
240	2	4720-01-209-3352	82484	W-22-105
240	3	4730-01-375-6304	0FW39	12417565
240	4	4820-01-375-3299	82484	104.385
240	5	2540-01-375-7316	0FW39	12417785

CROSS REFERENCE INDEXES

FIGURE AND ITEM NUMBER INDEX

FIGURE NO	ITEM NO	STOCK NUMBER	FSCM	PART NUMBER
240	6	5325-01-375-1299	19207	12417598
240	7	2540-01-375-7317	0FW39	12417490
240	8	5340-01-375-7249	4Y355	115200860015
240	9	5325-00-263-6632	96906	MS35489-6
240	10	5340-01-375-2864	0FW39	12417525
240	11	5340-01-406-9696	0FW39	12419113
241	1	2540-01-361-5201	82424	E-006-086
241	2	2540-01-412-3853	82424	GS-3909
241	3	5305-01-268-3656	15526	DIN933-M6X16-8.8 -A4C
241	4	2590-01-376-4484	0FW39	12417747
241	5	5365-01-375-5170	0FW39	12417488
241	6	5310-01-115-0762	19200	12524631-1
241	6	5310-01-115-0762	19200	12524631-1
241	7	5310-01-342-2739	15526	DIN 934 ST M6
241	8	5330-01-378-7541	82484	900.032
241	9	5310-01-375-7167	82484	910.075
241	10	5310-01-375-2159	82484	908.718
241	11	3040-01-375-1455	81484	C-2147
241	12	5310-01-381-3281	19207	12414560-018
241	12	5310-01-381-3281	19207	12414560-018
241	13	5310-01-375-6890	82484	907.108
241	13	5310-01-375-6890	82484	907.108
241	14	2540-01-384-6247	82484	12417860
241	14		82484	S-4706
241	15	2540-01-377-3038	82484	106.731
241	16	2540-01-364-1621	82484	C-2145
241	16	2540-01-364-1621	82484	C-2145
241	17		0FW39	TV980007
241	18	5310-01-376-0773	19207	12419003
241	19	5310-01-155-1911	34914	990 3861
241	20	5340-01-383-9586	19207	12420333
242	1	2540-00-168-2186	58536	A52432-3-R
242	1	2540-00-168-2187	58536	A52432-3-L
242	2	5310-00-877-5796	96906	MS21044-N4
242	3	5310-00-809-4058	96906	MS27183-10
242	4	2590-01-390-1038	0FW39	12419942-011
242	4	2590-01-382-2061	0FW39	12420113-008
242	5	5340-01-375-1269	0FW39	12419943-001
242	6	5310-01-369-3332	19207	12414315-006
242	7	5310-01-155-1911	34914	990 3861
242	8		19207	12419942-010
242	8	2590-01-381-1559	19207	12420113-007
242	9	5310-01-115-0762	19200	12524631-1
242	10	5305-01-374-1790	19207	12414475-068
242	11	5306-01-266-7779	81495	071 408 32
242	12	5340-01-442-1027	19207	12421262
242	13	5340-01-443-1360	19207	12419944-001
243	1	5305-01-166-0616	56161	10504502
243	2	9905-00-202-3639	96906	MS35387-2
243	3	5310-01-374-1382	19207	12414315-003
244	1	5305-01-166-0616	56161	10504502

CROSS REFERENCE INDEXES

FIGURE AND ITEM NUMBER INDEX

FIGURE NO	ITEM NO	STOCK NUMBER	FSCM	PART NUMBER
244	2	9905-00-205-2795	96906	MS35387-1
244	3	5310-01-374-1382	19207	12414315-003
245	1	4710-01-375-3417	19207	12418298-002
245	2	5325-01-340-1286	96906	MS35489-23X
245	3	4730-01-368-9806	7Z588	9410
245	4		0FW39	12414473-001
245	5	5305-01-268-3656	15526	DIN933-M6X16-8.8 -A4C
245	6		0FW39	12421721
245	7		0FW39	12420308X457
245	8	5310-01-155-1911	34914	990 3861
245	9	5305-01-273-6251	15434	C0718103500
245	10	2540-01-421-4591	24234	936185
245	11	2540-01-422-7758	24234	411271
245	12	5305-01-420-3756	24234	201870
245	13	2930-01-420-8621	24234	516640
245	14	5330-01-296-2109	24234	352700
245	15	5330-01-295-3053	24234	350700
245	16	5305-01-421-6046	24234	200943
245	17	5310-00-789-0398	19207	7951286
245	18	5640-01-356-1684	24234	352500
245	19	5340-01-419-9941	24234	516638
245	20	5930-01-424-5755	24234	222796
245	21	6240-01-420-7268	24234	222644
245	22	2590-01-421-5159	24234	243105
245	23	5340-01-205-5809	24234	290247
245	24	5305-01-332-0106	75755	21M7285
245	25	2540-01-422-7757	24234	360400
245	26	5340-01-420-9895	24234	515864
245	27	7690-01-423-3971	24234	342539
245	28	5355-01-K64-0289	24234	380007
245	29	5355-01-290-1619	24234	380087
245	30	5340-01-419-9944	24234	516643
245	31	6150-01-422-5660	24234	222677
245	32	5935-01-152-6814	71468	120-1809-000
245	33	4720-01-422-8313	24234	312000
245	34	4730-01-421-9633	24234	290267
245	35	5330-01-423-0623	24234	355175
245	36	5330-01-421-6103	24234	353806
245	37	2510-01-420-5182	24234	516644
245	38	5325-01-422-2609	24234	309851
245	39	2510-01-420-5183	24234	516651
245	40	9905-01-393-6342	24234	340958
245	41	4730-01-420-7908	24234	515867
245	42	5330-01-421-6105	24234	352200
245	43	5330-01-K64-0283	24234	353810
245	44	5330-01-421-6107	24234	352302X6
245	45	5330-01-421-6107	24234	352302X14.5
245	46	5330-01-421-6102	24234	353400
245	47	2540-01-421-8753	24234	280375
245	48		24234	290214
245	49	4720-01-422-9375	24234	320000

CROSS REFERENCE INDEXES

FIGURE AND ITEM NUMBER INDEX

FIGURE NO	ITEM NO	STOCK NUMBER	FSCM	PART NUMBER
245	50	2540-01-421-4592	24234	173048
245	51	7690-01-422-5682	24234	342550
245	52	5330-01-423-0596	24234	355148
245	53	5330-01-423-0689	24234	355150
245	54	5340-01-420-9793	24234	515865
245	55	5310-01-161-7308	99688	62229
245	56	5325-01-422-2610	24234	300620
245	57	5320-01-411-0081	24234	206057
245	58	5975-01-420-8392	24234	515866
245	59	5325-01-420-5383	24234	300597
245	60	2510-01-420-5184	24234	516653
245	61	5325-01-K64-0288	24234	360784
246	1	9905-01-377-5096	19207	12419099
246	2	9905-01-378-6628	19207	12419100
246	2	5320-00-999-0397	81349	M24243/1-B302
246	3	7690-01-256-4909	19207	12340917
246	4	9905-01-377-4799	19207	12417634
246	5	9905-01-377-9117	19207	12417616
246	6		0FW39	12420376-001
246	7	9905-00-198-2728	19207	11643398
246	8	9905-01-382-1109	19207	12419939
246	9	9905-01-392-6499	0FW39	12420207-001
246	9	9905-01-395-2086	19207	12420203
246	9		0FW39	12420205
246	9	9905-01-386-5295	19207	12418261
246	9	9905-01-K60-8909	19207	12418088
246	9	9905-01-K60-8907	0FW39	12414730-001
246	9	9905-01-393-6277	19207	12414732
246	10		0FW39	12420684
246	10		0FW39	12420682
246	10		0FW39	12420685
246	10		0FW39	12420679-001
246	10		0FW39	12420680-001
246	10		0FW39	12420683
246	10		0FW39	12420681
246	11		0FW39	12418116-001
246	12		0FW39	12418400-001
246	13	9905-01-446-5072	19207	12419097-001
246	14	9905-01-377-9725	19207	12417316
246	15	9905-01-377-7788	0FW39	12419098
246	16		0FW39	12420459-001
246	17	9905-01-393-2581	19207	12419124
246	18	9905-01-392-8089	19207	12417618
246	19	9905-01-377-7789	19207	12417317
246	20	5305-01-375-2855	0FW39	12414419-056
246	21	5310-01-421-9556	19207	12414560-011
246	22		0FW39	12420759
246	23	5310-01-378-3135	19207	12414474-009
246	24		0FW39	12420758
246	25	9905-00-565-6267	81337	6-1-2248
247	1	5340-01-443-1390	19207	12421267
247	2	5305-01-140-2490	05824	M10X1.5X30 DIN93

CROSS REFERENCE INDEXES

FIGURE AND ITEM NUMBER INDEX

FIGURE NO	ITEM NO	STOCK NUMBER	FSCM	PART NUMBER
				3 ST
247	3	5306-01-266-7779	81495	071 408 32
247	4	5310-01-155-1911	34914	990 3861
247	5	5310-01-365-7236	19207	12414315-009
247	6	4720-01-426-7854	0FW39	12420745-009
247	7	4730-01-007-5232	96906	MS51525A4
247	8	5330-00-805-2966	96906	MS28778-4
247	9	5310-01-381-3281	19207	12414560-018
247	10	5305-01-341-8926	15526	933-M8X20
247	11	5310-01-160-2032	1FH08	DIN555M8
247	12	5306-01-369-8191	19207	12414307-063
247	13	5305-01-178-7349	56161	10503805
247	14	5310-01-369-9522	19207	12414308-019
247	15	5340-01-427-9810	19207	12420411
247	16	5310-01-381-9819	19207	12414308-002
247	17		18076	S630H-36
247	18	5340-01-440-7687	19207	12420792-003
247	19	4720-00-443-4746	19207	12420572-004X
247	20	4730-01-086-4064	79470	1469X4X4
247	21	4930-01-417-4876	0PFG7	58477
247	22	6680-01-417-3362	0PFG7	251507
247	23	4730-01-417-2669	0PFG7	58473
247	24	5305-01-416-6664	0PFG7	11151
247	25	4310-01-417-2228	0PFG7	15459
247	26	5330-01-417-5104	0PFG7	251217
247	27	5340-01-417-3788	0PFG7	420828
247	28	3040-01-417-5835	0PFG7	33959
247	29	5340-01-163-7118	15434	216296
247	30	2940-01-417-6187	0PFG7	350894
247	31	4730-01-416-6801	0PFG7	14972
247	32	4820-01-418-6390	45225	21278-40
247	33	5305-00-521-8636	80063	SMD331453-1
247	34	4820-01-417-1559	0PFG7	36497
247	35	5330-01-160-4337	81349	M83461/1-438
247	36	5360-01-279-2215	45225	10445
247	37	5310-01-421-3089	0PFG7	10442
247	38	3110-01-299-8150	54225	10423
247	39	4820-01-421-3402	0PFG7	202568
247	40	5330-01-417-7795	45225	11863-012
247	41	5330-01-415-9632	0PFG7	19775
247	42	3120-99-730-3539	K0754	21094
247	43	5360-01-416-3101	0PFG7	16448
247	44	5310-00-725-7671	45225	10263
247	45	4330-01-417-2265	0PFG7	48010
247	46	2910-01-417-6189	0PFG7	214578
247	47	5325-01-416-8895	0PFG7	214586
247	48	3040-01-418-0002	0PFG7	51480
247	49	5310-01-417-1041	0PFG7	251391
247	50	5360-01-300-1191	45225	205679
247	51	5305-01-417-1174	0PFG7	205674
247	52	4320-01-301-8091	45225	28183
247	53	3040-01-167-9212	52891	3382-2

CROSS REFERENCE INDEXES

FIGURE AND ITEM NUMBER INDEX

FIGURE NO	ITEM NO	STOCK NUMBER	FSCM	PART NUMBER
247	54	2815-01-417-6186	0PFG7	305475
247	55	5330-01-417-5105	0PFG7	250192
247	56	5360-01-300-1188	45225	12692
247	57	4320-01-301-8429	45225	14265
247	58	5305-01-417-1175	0PFG7	211054
247	59	5310-01-416-3010	0PFG7	10241
247	60	5330-01-300-1216	45225	28239
247	61	4320-01-417-2266	0PFG7	52390
247	62	5330-00-247-4174	13841	11446
247	63	3040-01-418-7591	0PFG7	37434
247	64	2530-01-418-3385	0PFG7	28400
247	65	3040-01-417-2271	0PFG7	211082
247	66	5340-01-417-9898	0PFG7	202613
247	67	5360-01-300-1187	45225	13938
247	68	5325-01-416-3098	0PFG7	11034
247	69	5330-01-416-9966	0PFG7	14121
247	70	5330-01-417-7794	0PFG7	202624
247	71	4730-01-416-6798	0PFG7	10970
247	72	5310-00-725-7674	45225	10261
247	73	4320-01-417-2739	0PFG7	50494
247	74	5330-01-416-9964	0PFG7	350900
247	75	4320-01-417-2272	0PFG7	350887
247	76	5330-00-576-4626	98897	350903
247	77	5305-01-416-6668	0PFG7	17428
247	78	4730-01-416-6795	0PFG7	15426
247	79	5305-01-416-6662	0PFG7	10807
247	80	5330-01-417-5107	0PFG7	251216
247	81	5305-01-416-6665	0PFG7	14456
247	82	5330-01-183-0987	81349	M83461/1-442
247	83	4730-01-416-6800	0PFG7	11048
247	84		0TE27	AQ68-DOT-4X2SIL
248	1	4320-01-432-0321	26952	HP5003-4204
248	2	4730-01-025-6805	96906	MS51527A4Z
248	3	5330-00-805-2966	96906	MS28778-4
248	4	4720-01-426-7848	19207	12420745-006
248	5	4320-01-417-2269	0FW39	12420747
248	6	5310-01-239-7188	64678	007349010003
248	7	5305-00-068-0510	80204	B1821BH038C100N
248	8	5365-01-246-2870	81343	4 090109AB
248	9	5330-00-805-2966	96906	MS28778-4
248	10	4730-01-007-5232	96906	MS51525A4
248	11	5330-00-805-2966	96906	MS28778-4
249	1		84256	LT1504-C10-16
249	2	5306-01-266-7779	19207	12414419-093
249	3	5315-01-227-4226	84256	BLDC6-10
249	4	2990-01-417-3198	19207	12421152
249	5	5365-01-439-9017	19207	12421459
249	6	5305-01-K63-8222	19207	12414419-095
249	7	4720-01-428-9859	19207	12420745-005
249	8	4730-00-679-9280	81343	4-4 070601CA
249	9	5365-01-378-2881	81343	4-070118C
249	10	5325-00-923-9512	96906	MS21266-4N

CROSS REFERENCE INDEXES

FIGURE AND ITEM NUMBER INDEX

FIGURE NO	ITEM NO	STOCK NUMBER	FSCM	PART NUMBER
249	11	4730-01-336-3316	30780	533T-4-4
249	12	5325-00-783-4754	96906	MS21266-5N
249	13	5306-01-330-8490	19207	12414307-037
249	14	2990-01-417-2745	19207	12421154
249	15		19207	12420774
249	16	5305-01-387-2156	19207	12414419-055
249	17	5340-01-416-7232	19207	12420760
249	18	5310-01-369-3337	19207	12414308-018
249	19	5305-01-K63-9355	80204	B1834A08C014N
249	20		19207	12420775
249	21		19207	12420733
249	22	4730-01-092-0126	81343	4-4 070320C
249	23	5330-00-805-2966	96906	MS28778-4
249	24	4730-01-420-4738	19207	12420621
249	25	2940-01-417-9333	09990	75223-11
249	26		09990	17004-34
249	27	4820-01-443-6578	09990	DM104LD1X4879
249	28	5330-01-343-2745	09990	SK10-4
249	29	4820-01-417-9117	09990	DM104LN8X4879
249	30	5330-01-343-2745	09990	SK10-4
249	31	4820-01-417-2267	09990	25228-02
249	32	4820-01-417-2268	09990	25228-01
249	33	4820-01-428-9695	09990	CP104PX4879
249	34	5330-01-350-4472	09990	SK10-3
249	35	4820-01-428-6849	09990	CV101PX4879
249	36	5330-01-350-4474	09990	SK10-2
249	37	4820-01-418-0003	09990	745801
249	38	2990-01-444-3688	09990	25110-03
249	39	4730-01-428-9693	09990	25110-02
249	40	4820-01-428-9696	09990	25146-19
249	41	4730-01-418-9501	09990	108X4K
249	42	5330-00-805-2966	96906	MS28778-4
250	1	3040-01-372-1486	19207	12417905
250	2	5310-01-372-3495	19207	12418220
250	3	5340-01-371-7958	19207	12417924
250	4	3040-01-372-4179	26952	CA1513-7322PID23
250	5	4720-01-443-6457	0FW39	12417262-002
250	6	4730-00-811-1848	96906	MS51527A4P
250	7	5315-00-187-9394	96906	MS24665-459
250	8	5310-01-413-8475	81349	D63474/1-30
250	9	5325-00-783-4754	96906	MS21266-5N
250	10		19207	12417262-005
250	11	5305-01-178-7349	56161	10503805
250	12		18076	S630H-16
250	13		18076	S630H-10
250	14	4730-00-679-9280	96906	MS51520A4
250	15	4730-01-336-3316	30780	533T-4-4
251	1	4720-01-430-2720	19207	12420745-008
251	2	5365-01-378-2881	81343	4-070118C
251	3	5315-00-187-9394	96906	MS24665-459
251	4	5315-01-388-8569	19207	12417653-195
251	5	4730-01-025-6805	96906	MS51527A4Z

CROSS REFERENCE INDEXES

FIGURE AND ITEM NUMBER INDEX

FIGURE NO	ITEM NO	STOCK NUMBER	FSCM	PART NUMBER
251	6	5330-00-805-2966	96906	MS28778-4
251	7	4720-01-426-7853	0FW39	12420745-010
251	8	3040-01-370-5486	26952	UTTN91008.19
251	9	4730-00-443-4738	96906	MS51515A4
251	10	5340-01-426-4653	19207	12421263
251	11	4730-01-007-5232	96906	MS51525A4
251	12	5330-00-805-2966	96906	MS28778-4
252	1	4320-01-363-2294	14120	B5501-33364
252	2	5310-01-167-4064	21969	A 13 DIN125-ST
252	3	5305-00-071-2071	80204	B1821BH050C200N
252	4	4730-00-710-5571	96906	MS51525A12
252	5	5330-00-251-8839	96906	MS28778-12
252	6	4720-01-440-3701	19207	12414699-001
252	7	4730-00-019-1489	96906	MS51527A20
252	8	5330-00-816-3546	96906	MS28778-20
252	9	4720-01-442-2837	19207	12417312
252	10	5310-01-160-2032	1FH08	DIN555M8
252	11	5310-01-155-1911	34914	990 3861
252	12	5340-01-387-6787	19207	12418481
252	13	5305-00-071-2506	80204	B1821BH025C050N
252	14	5305-01-341-8926	15526	933-M8X20
252	15		09990	60095-11
252	16	4730-01-074-0907	81343	8-10 070120C
252	17	5330-00-285-9842	96906	MS28778-10
252	18	4720-01-K65-1578	19207	12414698-002
252	19	4710-01-K65-1577	19207	12414698-001
252	20	4730-00-906-0721	81343	10-10 070120CA
252	21	5330-00-285-9842	96906	MS28778-10
252	22	4720-01-442-4369	0FW39	12419043
252	23	4720-01-K65-1582	19207	12417313-002
252	24	4730-01-096-9138	96906	MS39324-12-10
252	25	5330-00-285-9842	96906	MS28778-10
252	26	5310-01-369-3332	19207	12414315-006
252	27	5340-01-384-1036	19207	12420361
252	28	4730-01-387-7116	0TE27	5320/320PPH
252	29	5340-01-442-8701	0TE27	CPT5
252	30	5305-01-259-8683	6V370	0636010109
252	31	5310-01-369-3337	19207	12414308-018
252	32	4730-00-822-5609	96906	MS51527A8
252	33	5330-00-808-0794	96906	MS28778-8
252	34	5305-01-389-7009	19207	12414309-034
252	35	5340-01-372-0376	0TE27	CPT3
252	36	5340-01-378-2475	0TE27	3222/222PPH
252	37	4720-01-K65-1580	19207	12417311
252	38	4730-01-184-6834	01276	2062-12-20S
252	39	5330-00-816-3546	96906	MS28778-20
252	40	4730-00-420-4441	81343	20-20 070320C
252	41	5330-00-816-3546	96906	MS28778-20
252	42	4730-01-384-0881	19207	12419810
252	43	4820-01-298-8416	81349	M81940/2-1
252	44	4720-01-K65-1583	19207	12419042
252	45	4730-01-093-8464	96906	MS51860-58

CROSS REFERENCE INDEXES

FIGURE AND ITEM NUMBER INDEX

FIGURE NO	ITEM NO	STOCK NUMBER	FSCM	PART NUMBER
252	46	5340-01-383-8797	19207	12418070
252	47	5306-01-385-7034	19207	12414307-016
252	48	5365-01-374-6928	19207	12417975-006
252	49	4730-00-194-4518	96906	MS51516A12S
252	50	5305-01-178-7349	56161	10503805
252	51	5310-01-389-8037	19207	12414314-004
252	52	5340-01-377-1548	18076	S463H-56
252	53		18076	S630H-32
252	54	5310-01-381-9819	19207	12414308-002
253	1	4730-01-025-6805	96906	MS51527A4Z
253	2	5330-00-805-2966	96906	MS28778-4
253	3	4720-01-426-7042	19207	12420745-002
253	4	4720-01-428-6939	19207	12420745-001
253	5	5305-01-440-1298	19207	12417929-001
253	5	5305-01-375-7357	19207	12417929
253	6	5315-01-376-0576	0FW39	12417930
253	7	5325-01-386-8186	84256	13-4CD
253	8	4010-01-388-3680	84256	50996-8W
253	9		84256	19-9CD
253	10	5310-01-369-3338	19207	12414308-021
253	11	5305-01-418-1921	80204	B18231B16030N
253	12	5365-01-417-3812	19207	12421158
253	13	5340-01-418-2903	19207	12420750
253	14	4010-01-417-4529	19207	12421180
253	15	5315-00-187-9382	96906	MS24665-385
253	16	4030-01-424-6542	75535	1018892
253	17	4010-01-423-0974	19207	12421195
253	18	5340-01-423-0894	19207	12421196
253	19	4720-01-429-3835	19207	12420745-003
253	20	5315-01-416-7214	96906	MS17984C735
253	21		0FW39	12420196-003
253	22	5305-01-386-3501	19207	12414419-089
253	23	4720-01-429-3835	19207	12420745-004
253	24	3040-01-417-6191	19207	12420793
254	1	5340-01-372-0377	98624	SS5811
254	2	5340-01-448-0474	0FW39	12414579-001
254	3	5306-01-387-6046	19207	12414307-069
254	4	5310-01-381-9830	19207	12414308-017
254	5	5310-01-369-9522	19207	12414308-019
254	6	5306-01-374-1078	19207	12414307-023
254	7	5310-01-369-6706	19207	12414308-025
254	8	5306-01-372-0786	19207	12414307-138
254	9	5306-01-384-3485	19207	12414307-149
254	10	5306-01-372-3536	19207	12414307-140
254	11	2815-01-374-3996	19207	12417347
254	12		19207	12414669-003X378
254	13	2590-01-388-4717	98624	SS5809
254	14		98624	12414669-004X241
254	15	4320-01-374-4316	98624	SS5766REVE
254	16	5340-01-372-4887	51377	A1349S
254	17	6680-01-373-5740	0FW39	12418142
254	18	4820-01-393-4532	51377	A1386H

CROSS REFERENCE INDEXES

FIGURE AND ITEM NUMBER INDEX

FIGURE NO	ITEM NO	STOCK NUMBER	FSCM	PART NUMBER
254	19	5340-01-440-1195	51377	A1390A
254	20	4730-00-188-3507	96906	MS27769C5
254	21	4730-00-014-4027	79470	3152X8
254	22	4330-01-383-2290	05779	N3-15CN-2-10B-15 158
254	23	2940-01-363-4377	05779	931558
254	24		05779	N72143
254	25	5310-01-115-0762	19200	12524631-1
254	26	5305-00-071-2506	80204	B1821BH025C050N
255	1	8145-01-413-8516	19207	12414397
255	2	8145-01-K62-5221	0FW39	12420026
255	3	5330-01-394-2410	19207	12420037
255	4	6685-00-618-1822	10001	1404491
255	5	5305-00-253-5627	96906	MS21318-48
255	6	9905-00-901-2942	19207	7973326
255	7	4820-01-204-8364	08992	TA330-10-10-R
255	8	2520-01-268-1051	19207	12338078
255	9	5310-00-768-0318	96906	MS51967-14
255	10	5310-00-584-5272	96906	MS35338-48
255	11	5340-01-394-0424	19207	12420030
255	12	5305-01-325-8388	96906	MS90725-113
255	13	5340-01-394-0429	19207	12420031
255	14	5305-00-071-2067	80204	B1821BH050C125N
255	15	5340-01-394-6377	19207	12420032
255	16	5310-00-732-0560	96906	MS51968-14
255	17	8145-01-397-7426	19207	12420027
255	18	5310-00-809-5998	96906	MS27183-18
255	19		19207	12420036
255	20	5305-00-071-2083	80204	B1821BH050C500N
255	21	4730-00-221-2140	96906	M20913-6S
255	22	7690-01-418-9373	19207	12420033
255	23	5305-00-071-2071	80204	B1821BH050C175N
255	24	2510-01-396-9061	19207	12420028
255	25	8105-00-477-3716	19207	10890481
256	1	8145-01-413-8521	19207	12414256
256	2	8145-01-396-8895	0FW39	12420042
256	3	5330-01-394-2411	19207	12420056
256	4	6685-00-618-1822	10001	1404491
256	5	5305-00-253-5627	96906	MS21318-48
256	6	9905-00-409-8948	19207	7973325
256	7	4820-01-204-8364	08992	TA330-10-10-R
256	8	2520-01-268-1051	19207	12338078
256	9	5310-00-768-0318	96906	MS51967-14
256	10	5310-00-584-5272	96906	MS35338-48
256	11	5340-01-394-0427	19207	12420048
256	12	5340-01-394-0428	19207	12420049
256	13	5340-01-394-2395	19207	12420047
256	14	5305-00-071-2067	80204	B1821BH050C125N
256	15	5310-00-732-0560	96906	MS51968-14
256	16	5305-01-325-8388	96906	MS90725-113
256	17	5340-01-394-6377	19207	12420032
256	18	8145-01-396-9507	0FW39	12420043

CROSS REFERENCE INDEXES

FIGURE AND ITEM NUMBER INDEX

FIGURE NO	ITEM NO	STOCK NUMBER	FSCM	PART NUMBER
256	19		19207	12420036
256	20	5305-00-071-2083	80204	B1821BH050C500N
256	21	4730-00-221-2140	96906	MS20913-6S
256	22	7690-01-399-0346	19207	12420050
256	23	5305-00-071-2071	80204	B1821BH050C175N
256	24	5305-00-071-2071	80204	B1821BH050C200N
256	25	2510-01-396-8119	19207	12420044
256	26	5340-01-394-0430	19207	12420045
256	27	5340-01-394-0431	19207	12420046
256	28	8105-00-477-3716	19207	10890481
256	29	5310-01-308-8205	96906	MS27183-48
257	1	2540-01-381-1626	19207	57K1218
257	2		81349	M62217/1-12-66
257	3	4730-01-368-9805	7Z588	9408
257	4	4730-01-383-5173	81343	12-16 430160C
257	5	5306-01-442-4848	80205	NAS3106-15-14
257	6	5310-00-926-1852	96906	MS21083N6
257	7	5310-01-363-0740	19207	12414473-014
257	8	5306-01-387-6046	19207	12414307-069
257	9	5340-01-410-9102	19207	12420434
257	10	5310-01-155-1911	34914	990 3861
257	11	5310-01-369-5703	19207	12414308-004
257	12	4820-01-383-5329	93061	V50SS-16
257	13	4730-01-440-4855	19207	12421370
257	14	4730-01-329-9151	7Z588	CT 250L
257	15		81349	M62217/1-24-15
257	16	4730-01-381-8927	81343	12-12 430360CA
257	17	2990-01-388-1292	19207	12420350
257	18	5305-01-341-8926	15526	933-M8X20
257	19	4730-01-368-9806	7Z588	9410
257	20	4720-01-442-7836	81349	M6202823121715
257	21	5310-01-390-9049	19207	12414308-005
257	22	5306-01-264-6360	15526	DIN933-M10X20-8. 8-A4C
257	23	2510-01-387-3998	19207	12420349
257	24	3120-01-369-6733	19207	12417700
257	25	5306-01-149-6278	11862	14028922
257	26	4730-01-212-9613	7Z588	9420
257	27	4730-01-411-3969	19207	12420491
257	28	2540-01-076-9286	16236	269013000000
257	29	5310-01-363-4881	19207	12414474-015
257	30	4720-01-383-5508	19207	12419152
257	31	4320-01-385-7015	62380	458392
257	32	5340-01-381-3947	19207	12419146
257	33	4730-00-908-6292	96906	MS35842-14
257	34		81349	M62217/1-16-80
257	35	4730-01-381-8286	81343	12-12 430220C
257	36	2590-01-372-8070	19207	12417696
257	37	5310-01-381-9819	19207	12414308-002
257	38	4730-01-411-0665	81343	6-10 070202C
257	39		19207	12418124-003
257	40	5310-01-115-0762	19200	12524631-1

CROSS REFERENCE INDEXES

FIGURE AND ITEM NUMBER INDEX

FIGURE NO	ITEM NO	STOCK NUMBER	FSCM	PART NUMBER
257	41	5305-01-178-7349	56161	10503805
257	42	4730-00-623-9673	81343	6-10 070120CA
257	43	2990-01-441-1649	55752	14339
257	44	5305-01-385-0754	19207	12414309-022
257	45		0FW39	12418124-004
257	46	4710-01-381-8667	19207	12417937-004
257	47	5325-00-074-3301	96906	MS21266-2N
257	48	2510-01-385-8887	19207	12378453
257	49	5305-01-382-4111	19207	12414419-054
257	50	2510-01-383-2372	19207	12378452
257	51		82484	E-003-028
257	52	6210-01-389-6456	82484	59L-292
257	53	5930-01-381-7489	19207	12378620-002
257	54	6220-01-355-0001	82484	E-013-002
257	55	5305-01-386-7845	19207	12414419-039
257	56		82484	E-003-019
257	57	6210-01-345-6315	82484	E-013-001
257	58	5930-01-381-7489	19207	12378620-002
257	59	2910-01-383-5417	82484	59L.414
258	1	2540-01-383-5509	0FW39	12419976
258	2	2510-01-388-1296	0FW39	12419977
258	3	5325-01-441-7650	71286	18L01-1-1AA
258	4	5310-01-382-7024	19207	12414570-012
258	5	5305-01-158-0793	56161	10505582
258	6	5305-01-268-3656	15526	DIN933-M6X16-8.8 -A4C
258	7	5310-01-115-0762	19200	12524631-1
258	8	4730-00-639-9882	88044	AN849-4D
258	9	5310-00-079-1967	88044	AN924-4J
258	10	4730-00-278-2523	88907	B54-32780
258	11		81349	M62217/1-24-2.31
258	12	4730-00-908-3193	66295	WWD48-58H
258	13		81349	M13444T1.25X3.5
258	14	5340-01-372-2469	78225	AX-0465
258	15		81349	M13444T1.25X3.5
258	16	5305-01-273-6251	15434	C0718103500
258	17	5310-01-155-1911	34914	990 3861
258	18	2930-01-383-5391	19207	12419993
258	19		81349	M13444T1.25X12
258	20		81349	M13444T1.25X48
258	21	4730-01-381-8912	81343	4-4 430260S
258	22	4710-01-382-2052	19207	12419979
258	23	5975-00-899-4606	96906	MS3367-2-0
258	24		81349	M62217/1-16-40
258	25		81349	M62217/1-16-16
258	26	4730-01-383-5276	96906	MS24520-11
258	27		81349	M62217/1-16-38
258	28	4710-01-381-8909	19207	12419978
258	29	5340-00-005-0537	96906	MS9352-10
258	30	5310-01-160-2032	1FH08	DIN555M8
258	31	5310-01-381-9819	19207	12414308-002
258	32	5305-01-382-1173	1CJ86	BN28-M10X60

CROSS REFERENCE INDEXES

FIGURE AND ITEM NUMBER INDEX

FIGURE NO	ITEM NO	STOCK NUMBER	FSCM	PART NUMBER
258	33	5340-00-190-6767	72629	PTMC125
258	34	5340-01-090-8916	96906	MS9352-18
258	35	5340-01-381-3871	19207	12420239
258	36	5975-00-984-6582	96906	MS3367-1-0
258	37		81349	M62217/1-16-5
259	1	6625-01-388-8341	19207	12420182
259	2	5340-01-381-2092	19207	12420228
259	3	5305-00-059-3656	96906	MS51958-60
259	4	5310-00-261-7156	96906	MS35333-78
259	5		19207	105373
259	6	5305-00-054-6648	96906	MS51957-24
259	7	5925-00-570-4602	81349	MS5629/2-127
259	8	5310-00-934-9765	96906	MS35650-304
259	9	6150-00-557-7656	96906	MS25226-4-3
259	10		19207	12420226
259	11	5305-00-054-5641	96906	MS51957-7
259	12	5310-01-381-9990	96906	MS51859-16
259	13	5307-01-381-9863	19207	12420271
259	14	5310-01-314-6722	81349	M45595/1-12
259	15	5325-01-288-7881	96906	MS35489-141
259	16	5310-00-933-8120	96906	MS35338-138
259	17	5935-01-111-6748	96906	MS3474E20-16S
259	18	5940-00-950-7784	96906	MS27212-2-16
259	19	6145-01-241-0961	81349	M16879/14BJE9
259	20	5940-00-107-1481	96906	MS20659-104
259	21	6150-00-557-7653	96906	MS25226-4-2
259	22	6210-00-299-6656	96906	MS25010A11
259	23	6240-01-074-4600	96906	MS25237-387R
260	1	2990-01-381-8678	62380	DBW2020.40
260	2	2540-12-336-5270	62380	469.084
260	3	5315-01-395-0163	62380	348.449
260	4	5306-01-340-2695	62380	458.201
260	5	5310-01-339-3991	62380	461.563
260	6	5315-01-411-9052	62380	352.500
260	7	2990-01-376-5662	62380	464.333
260	8	5340-01-411-0870	62380	21324A
260	9		62380	109.492
260	10	5340-01-417-7793	62380	136.190
260	11	4320-01-385-7015	62380	458392
260	12	5940-00-177-6760	00779	42565-1
260	13	5935-01-212-7127	62380	178.802
260	14	4330-01-439-0032	62380	140.708
260	15	2910-01-K62-5428	62380	140.716
260	16	5330-01-395-4645	62380	331.406
260	17	5340-01-395-1265	62380	362.115
260	18	5305-12-187-5147	D8286	M4X12DIN7985-8-8 -B3B
260	19	5310-01-407-4764	62380	152.269
260	20	5330-01-244-6375	62380	151.157
260	21	5365-01-244-6364	62380	149.314
260	22	5340-01-395-1264	62380	463.027
260	23	2590-01-K62-5443	62380	132.748

CROSS REFERENCE INDEXES

FIGURE AND ITEM NUMBER INDEX

FIGURE NO	ITEM NO	STOCK NUMBER	FSCM	PART NUMBER
260	24	5340-01-180-8594	62380	136.204
260	25	5305-01-395-0841	62380	470.562
260	26	4520-12-336-7642	62380	101.830
260	27	5975-12-305-7493	D1993	404.918
260	28	5995-01-212-7561	62380	178.624
260	29	2990-01-244-6235	62380	326.666
260	30	7690-01-421-7857	62380	101.660
260	31	5305-12-142-5547	D8286	M5X12DIN7985-4-8 A2P
260	32	5310-01-395-7647	62380	152.595
260	33	5340-01-395-1262	62380	350.680
260	34	2590-01-244-6239	62380	397.563
260	35	5305-01-307-4391	21793	616329
260	36	6105-01-394-8589	62380	106.082
260	37	5945-01-406-2360	62380	248.401
260	38	5340-01-395-1263	62380	436.410
260	39	2990-12-185-7328	62380	350.427
260	40	5930-01-407-1580	62380	30607B
260	41	5340-01-394-7392	62380	362.107
260	42	6150-01-395-2543	62380	444.170
260	43	5920-01-217-8335	62380	406.287
260	44	5305-01-244-6386	62380	279.110
260	45	5930-01-221-7902	01993	354.902
260	46	5920-01-395-3748	62380	608.719
260	47	5340-01-395-1253	62380	289.329
260	48	5305-01-158-0793	56161	10505582
260	49	5935-01-244-6425	62380	288.640
260	50	5340-01-394-7391	62380	298.816
260	51	6110-01-394-5707	62380	273.473
260	52	5305-01-244-6246	62380	273.481
260	53	5340-01-395-1266	62380	487.627
260	54	5305-12-126-8925	62380	148.245
260	55	5310-01-285-4017	62380	152.560
260	56	2510-01-244-6240	62380	286.354
260	57	3120-01-407-6556	62380	378.321
260	58	2520-01-244-6394	62380	398.144
260	59	2990-12-185-7332	62380	275.611
260	60	5325-01-244-6382	62380	270.903
260	61	4530-01-K62-5438	62380	103.512
260	62	5340-01-395-1261	62380	277.479
260	63	3020-01-395-7281	62380	371.289
260	64	5365-12-156-4709	D8090	A6
260	65	4320-01-K62-5455	62380	286.303
260	66	6150-01-395-2545	62380	101.804
260	67	5340-01-395-1258	62380	437.247
260	68	4540-01-394-8137	62380	420042
260	69	5305-01-155-5439	56161	10501757
260	70	5935-01-231-5250	62380	328.529
260	71	5935-01-178-7303	62380	176.591
260	72	5340-01-394-7386	62380	278.971
260	73	2540-01-244-6244	62380	274.313
260	74	2990-01-244-6242	62380	453.048

CROSS REFERENCE INDEXES

FIGURE AND ITEM NUMBER INDEX

FIGURE NO	ITEM NO	STOCK NUMBER	FSCM	PART NUMBER
260	75	5940-01-209-8933	62380	178.713
260	76	5930-01-406-2359	62380	104.012
260	77	5310-01-395-7646	62380	147.044
260	78	5340-01-395-1260	62380	296.740
260	79	4520-01-214-4315	62380	215.171
260	80	4530-12-336-1647	62380	470.716
260	81	4530-01-395-6057	62380	412198
260	82	5305-01-246-2383	45152	5WB42
260	83	4710-01-209-3454	62380	275.476
260	84	4720-01-209-3349	62380	352.144
260	85	4730-01-211-1836	62380	150.754
260	86	5330-01-244-6373	62380	340.995
260	87	4730-01-394-8139	62380	330.027
260	88	4710-01-394-8142	62380	464.155
260	89	2910-01-244-6436	62380	376.930
260	90	5330-01-244-6374	62380	260.738
260	91	5310-01-395-0823	62380	152.544
260	92	5305-01-395-0145	62380	277.282
260	93	2910-12-185-7336	D1993	352-13A
260	94	4710-12-325-1896	62380	111.375
260	95	5945-01-217-3325	45152	2BG782
260	96	5330-01-157-6233	62380	260.487
261	1	6150-01-387-6375	0FW39	12420183
261	2	5935-01-111-4580	96906	MS3474W16-8S
261	3	5935-01-171-1966	81349	M85049/52-1-16W
261	4	5970-00-727-6728	81349	M23053/5-207C
261	4	9905-00-893-3570	81349	M43436/1-3
261	5	5935-01-109-7518	96906	MS3476W20-16P
261	6	5935-01-186-5610	81349	M85049/51-1-20W
262	1	6150-01-382-5387	19207	12420184
262	2	5935-01-384-3582	11139	88049-24-03PN
262	3	5970-01-387-7193	75037	333H285-6-250
262	4	9905-00-893-3570	81349	M43436/1-3
262	5	5940-00-115-2677	96906	MS20659-144
263	1	4720-01-386-5655	81349	M6202823444884
263	2	5340-00-190-6812	96906	MS21314-18
263	3	5306-01-102-2645	16004	82045
263	4	4730-00-908-6292	96906	MS35842-14
263	5	5310-01-155-1911	34914	990 3861
263	6	5310-01-363-4879	19207	12414474-011
263	7	5305-01-356-9468	44940	800-2010
263	8	5310-00-043-0520	96906	MS35650-3252
263	9	5340-00-598-4151	88044	AN742-52
263	10	5310-01-370-7447	19207	12414474-010
263	11	5310-01-115-0762	19200	12524631-1
263	12	5305-01-178-7349	56161	10503805
263	13	2990-01-387-5166	19207	12420337
263	14	5305-00-514-8005	96906	MS35266-79
263	15	5310-00-809-4058	96906	MS27183-10
263	16	5340-01-390-3741	19207	12419057-003
263	17	5310-01-374-6990	19207	12414473-010
263	18	5310-01-374-1382	19207	12414315-003

CROSS REFERENCE INDEXES

FIGURE AND ITEM NUMBER INDEX

FIGURE NO	ITEM NO	STOCK NUMBER	FSCM	PART NUMBER
264	1	2540-01-383-5411	0FW39	57K1217
264	2	5306-01-372-0786	19207	12414307-138
264	3	5310-01-158-9053	45152	2AW725
264	4	5310-01-384-2526	19207	12414474-019
264	5	5340-01-381-3770	01943	EXP25358
264	6	5340-01-381-3996	01943	EXP25357
264	7	5340-01-381-3813	19207	12418231
264	8	6150-01-412-7286	19207	12420502
264	9	5330-01-386-9019	19207	12419265
264	10	5305-01-299-4602	64678	000933 006058
264	11	5310-01-381-9819	19207	12414308-002
264	12	4320-01-381-2850	62380	U4810
264	13	4730-01-212-9613	7Z588	9420
264	14	4720-01-383-5395	19207	12418162-001
264	15	5310-01-155-1911	34914	990 3861
264	16	5306-01-385-6980	19207	12414307-025
264	17		81349	M62217/1-12-3.50
264	18		0FW39	12421779
264	19	4730-01-381-3844	0TE27	22BH-4-4
264	20	4730-00-278-2523	88907	B54-32780
264	21		81349	M13444T1.250X144
264	22		81349	M13444T1.250X140
264	23		81349	M62217/1-10-6
264	24	4710-01-383-5344	19207	12417940
264	25		81349	M62217/1-10-4
264	26	4730-01-381-2828	19207	12419086
264	27		81349	M62217/1-12-165
264	28	5306-01-374-1078	19207	12414307-023
264	29	5340-01-381-3852	19207	12419153
264	30	4720-01-383-5284	19207	12418162-002
264	31	4730-01-383-5786	81343	12-12 430160C
264	32	4810-01-418-0299	0FW39	12421723
				0
264	33	4730-01-168-1906	81343	12-12 430260B
264	34	4720-01-384-6531	19207	12418162-003
264	35	4810-01-439-5567	19207	12421244
264	36		81349	M62217/1-12-180
264	37	4730-00-935-1528	81343	6-4 140140S
264	38	4730-01-381-8281	81343	4-4 430360S
264	39		81349	M13444T1.250X72
264	40	4730-01-411-7546	81343	6-4 241442S
264	41	4730-01-408-3169	81343	6-6-6 070425S
264	42	5310-01-363-0740	19207	12414473-014
264	43	5310-01-365-7236	19207	12414315-009
264	44	2910-01-383-5096	33457	3845560
264	45	4730-01-381-8912	81343	4-4 430260S
264	46	4730-01-381-8730	81343	4 130109C
264	47	5306-01-270-4217	81495	071 410 36
265	1	2990-01-383-5285	62380	447.900
265	2	5930-01-407-1580	62380	30607B
265	3	5340-01-394-7392	62380	362.107
265	4	5305-01-395-0836	62380	382.485

CROSS REFERENCE INDEXES

FIGURE AND ITEM NUMBER INDEX

FIGURE NO	ITEM NO	STOCK NUMBER	FSCM	PART NUMBER
265	5	5945-01-395-8628	62380	388.815
265	6	5975-12-305-7493	D1993	404.918
265	7	5995-01-212-7561	62380	178.624
265	8	9905-01-397-7508	62380	101660
265	9	5305-01-395-0822	62380	147.834
265	10	5310-01-395-0825	62380	152.552
265	11	5340-01-395-1255	62380	425.052
265	12	2520-01-394-9686	62380	350.516
265	13	5305-12-187-5147	D8286	M4X12DIN7985-8-8 -B3B
265	14	5310-01-395-0823	62380	152.544
265	15	6105-01-395-1311	62380	425.079
265	16	5945-01-437-8072	62380	600.291
265	17	5340-01-394-7390	62380	316.199
265	18	5310-01-407-4764	62380	152.269
265	19	2990-12-185-7328	62380	350.427
265	20	5340-01-395-1256	62380	436.216
265	21	6150-01-395-2542	62380	434.795
265	22	5305-01-395-0821	62380	148.210
265	23	5340-01-395-1254	62380	301.841
265	24	2930-01-395-3438	62380	373.001
265	25	3120-01-396-7108	62380	378.313
265	26	5330-01-395-0839	62380	412.244
265	27	6150-01-396-0893	62380	301.825
265	28	5325-01-395-4214	62380	298.964
265	29	5325-01-394-7389	62380	299.995
265	30	5930-01-396-7393	62380	603.547
265	31	5305-01-397-0299	62380	277.150
265	32	4210-01-244-6241	62380	377.368
265	33	3020-01-395-7281	62380	371.289
265	34	5365-12-156-4709	D8090	A6
265	35	4710-01-350-7835	62380	111.372
265	36	5330-01-244-6375	62380	151.157
265	37	4730-01-211-1836	62380	150.754
265	38	5330-01-157-6233	62380	260.487
265	39	2990-01-417-2242	62380	386.650
265	40	5945-01-217-3325	45152	2BG782
265	41	4540-01-394-8137	62380	420042
265	42	5340-01-395-1258	62380	437.247
265	43	5340-01395-0141	62380	176.494
265	44	5305-01-155-5439	56161	10501757
265	45	5310-01-285-4017	62380	152.560
265	46	5340-01-394-7386	62380	278.971
265	47	2540-01-244-6244	62380	274.313
265	48	2990-01-244-6242	62380	453.048
265	49	4820-01-394-9688	62380	378.232
265	50	4520-01-214-4315	62380	215.171
265	51	5305-01-246-2383	45152	5WB42
265	52	4530-01-396-1376	62380	429.112
265	53	4530-01-395-6057	62380	412198
265	54	4320-01-410-8799	62380	42977A
265	55	5305-01-395-0145	62380	277.282

CROSS REFERENCE INDEXES

FIGURE AND ITEM NUMBER INDEX

FIGURE NO	ITEM NO	STOCK NUMBER	FSCM	PART NUMBER
265	56	5305-01-395-0826	62380	331.562
265	57	4810-01-244-6245	62380	355.836
265	58	4330-01-244-6435	62380	310.344
265	59	4710-01-209-3454	62380	275.476
265	60	5330-01-244-6373	62380	340.995
265	61	5330-01-244-6374	62380	260.738
265	62	4710-12-321-0893	62380	345.288
265	63	5930-01-221-7902	01993	354.902
265	64	5340-01-394-7391	62380	298.816
265	65	6110-01-394-5707	62380	273.473
265	66	5305-01-244-6246	62380	273.481
265	67	5340-01-395-1245	62380	276.456
265	68	5310-01-395-7861	62380	308.331
265	69	5305-01-158-0793	56161	10505582
265	70	5340-01-407-0507	62380	319.430
265	71	5920-01-217-8335	62380	406.287
265	72	5920-01-395-3748	62380	608.719
265	73	2540-01-411-5532	62380	415.073
265	74	5340-01-395-1253	62380	289.329
265	75	5305-01-244-6386	62380	279.110
265	76	5315-01-395-0837	62380	420.565
265	77	5306-01-397-0298	62380	363.618
265	78	5310-01-395-0818	62380	461.555
265	79	5340-01-394-7393	62380	352.152
265	80	5315-01-394-3546	62380	352.497
265	81	2990-01-397-2316	62380	26553A
266	1		19207	57K1948
266	2		19207	12421569
266	3		19207	12421602
266	4		71643	100SX
266	5	5310-00-933-8121	96906	MS35338-139
266	6	5310-00-250-9477	96906	MS35649-2254
266	7		19207	12421599
266	8	5310-00-550-5054	96906	MS15795-809
266	9	5305-00-719-3997	96906	MS35307-303
266	10		19207	12421539
266	11		19207	12421678
266	12		19207	12414310-026
266	13		19207	12421538
266	14	5325-00-262-9162	96906	MS35489-94
266	15		19207	12421601
266	16	5305-00-207-8253	96906	MS35308-308
266	17	5310-00-889-2589	96906	MS21044C4
266	18		19207	12421590-003
266	19		19207	12421590-001
266	20	4730-00-473-8357	81343	4-2 010102S
266	21		72850	60001
266	22		19207	12421590-002
266	23		0FW39	12422289
266	24		0FW39	12422274
266	25	4730-01-194-5339	81343	6-4 070123BA
266	26		81343	6-4 070603BA

CROSS REFERENCE INDEXES

FIGURE AND ITEM NUMBER INDEX

FIGURE NO	ITEM NO	STOCK NUMBER	FSCM	PART NUMBER
266	27		81343	6-4 430160BA
266	28	4730-00-908-3195	81343	SAE J1508-06
266	29	5340-01-140-6429	96906	MS21919WCH10
266	30		81349	M13444T1.375X72
266	31	5310-00-615-1556	28527	2616950G001
266	32	5310-00-933-8120	96906	MS35338-138
266	33	5305-00-059-3659	96906	MS51958-63
266	34	4730-01-164-3365	93061	207ACBH-4
266	35		19207	12416350
266	36	5305-00-702-4523	96906	MS35307-306
266	37		30780	14C
266	38		30780	H5EP
266	39		81349	M13444T1.375X23
266	40		81349	M13444T.1375X30
266	41		96906	M51321-2-24H1
266	42	4730-00-277-5736	81343	4-4 130138B
266	43		81349	M13444T1.375X14
266	44	4730-00-057-5555	81343	6 130109NC
266	45		0TE27	5655-06-06-06-06
266	46	4730-00-177-6166	81343	4-4-4 140424C
266	47	4730-01-381-8730	81343	4 130109C
266	48	5310-00-761-6882	96906	MS51967-2
266	49	4730-00-041-2526	81343	6-4 430260B
266	50	5305-00-225-3843	80204	B1821BH025C100N
266	51	5310-00-582-5677	96906	MS15795-810
266	52		19207	12421504-001
266	53	5935-00-849-3867	96906	MS3108R14S7P
266	54	9905-00-893-3570	81349	M43436/1-3
266	55	5935-00-192-6336	96906	MS3106F14S-7S
266	56		19207	12421504-002
266	57	5935-01-324-2350	58536	A-A-55464-05
266	58	9905-00-893-3570	81349	M43436/1-3
266	59	5935-01-323-6814	58536	A-A-55463-05
266	60		19207	12421504-003
266	61	5935-00-878-5562	96906	MS3108E18-10S
266	62	9905-00-893-3570	81349	M43436/1-3
266	63	5935-00-683-1229	96906	MS3106E18-10P
266	64		19207	12421504-004
266	65	5935-00-581-1080	96906	MS310614S9P
266	66	9905-00-752-4649	81349	M43436/1-1
266	67	5935-00-115-2307	96906	MS27144-2
266	68	5940-01-053-0654	06383	14-14F
267	1		19207	57K1947
267	2		81349	MIL-A-52767D
267	3		19207	12416646-002
267	4		19207	12416646-001
267	5	5310-00-167-0768	88044	AN970-6
267	6	5305-00-269-3240	96906	MS90726-64
267	7		19207	12416641
267	8	5935-00-879-3265	96906	MS3106R18-11P
267	9	9905-00-893-3570	81349	M43436/1-3
267	10	5935-00-233-3990	96906	MS3106F18-11S

CROSS REFERENCE INDEXES

FIGURE AND ITEM NUMBER INDEX

FIGURE NO	ITEM NO	STOCK NUMBER	FSCM	PART NUMBER
268	1	2540-01-381-3967	19207	57K1903
268	2		19207	12420572-006X
268	3	4730-00-287-1701	93061	144F-6
268	4	4730-01-283-1877	81343	6-6-6 100425BA
268	5	4730-00-817-6578	96906	MS14315-4
268	6		81349	M13444T1.250
268	7	4730-01-378-7846	0TE27	7207-0663-5
268	8	4730-01-283-8150	93061	159F-4-4
268	9	4730-00-266-0534	81343	4-6-010102B
268	10	4730-01-234-4802	81343	4-4-4 130424B
268	11	4720-00-882-1379	81343	SAE100R4-16
268	12	4730-01-212-9613	7Z588	9420
268	13	4730-01-274-1825	81343	6-6 100202BA
268	14	9390-01-446-0572	8R302	0384-5-78
268	15	4730-00-092-3883	81343	4-4-4-010401BA
268	16	4730-01-377-6820	0TE27	7207-86552
268	17		0LEB5	7632 319 114
268	18	4730-00-278-2523	88907	B54-32780
268	19	5340-01-381-3820	19207	12419260
268	20	5306-01-326-4911	75755	19M7866
268	21	4730-00-511-1677	93061	207ACBH-6
268	22	4710-01-383-5247	19207	12419802
268	23	4730-01-096-9128	79470	1468X6X6
268	24	5310-01-369-3337	19207	12414308-018
268	25		19207	12420463-002
268	26	5340-01-377-6171	18076	S630H-24
268	27		19207	12420463-001
268	28	5305-01-178-7349	56161	10503805
268	29	5310-01-381-9819	19207	12414308-002
268	30		0TE27	JM0412
268	31	4730-01-388-5503	73342	29502386
268	32		19207	12419191-001
268	33	5340-01-386-8163	18265	P20-6606
268	34		19207	12419191-003
268	35		19207	12419284-003
268	36	4730-00-908-6293	06481	T-218758
268	37		63208	50257
268	38		19207	12419191-004
268	39		19207	12414307-040
268	40		19207	12421443
268	41		63208	941-062
268	42	5306-01-386-9065	19207	12414307-014
268	43	5310-01-369-5703	19207	12414308-004
268	44		19207	12421442
269	1	6220-01-423-2337	0FW39	57K1220
269	2	6220-01-383-9914	0FW39	12420230
269	3		11721	250-33-A
269	4		11721	212-55
269	5		11721	212-5BH-P
269	6	6240-00-578-6763	08806	4416
269	7		11721	212-44
269	8	5310-00-596-7693	96906	MS35335-31

CROSS REFERENCE INDEXES

FIGURE AND ITEM NUMBER INDEX

FIGURE NO	ITEM NO	STOCK NUMBER	FSCM	PART NUMBER
269	9	5310-00-934-9757	96906	MS35649-282
270	1	2540-01-381-5860	19207	57K1893
270	2	2540-01-387-3972	19207	12418555-002
270	3	2540-01-383-5754	19207	12418755
270	3	2540-01-442-5243	19207	12418548
270	4	2540-01-438-5919	19207	12420591
270	5	5340-01-387-8231	19207	12418551
270	6	5340-01-387-8265	19207	12418558
270	7	5306-00-226-4835	80204	B1821BH031C250N
270	8	5310-00-984-3806	96906	MS51922-9
270	9	2540-01-383-5328	19207	12418559-001
270	10	3040-01-389-4265	19207	12418543-002
270	11	5315-01-388-0908	19207	12418557-002
270	12		2AA56	999-000890
270	13	4710-01-383-5876	19207	12418544-001
270	14	2540-01-383-5416	19207	12418559-002
270	15	3040-01-389-7826	19207	12418543-001
270	16	5340-01-397-0288	19207	12418552
270	17	2540-01-383-5962	19207	12418546
270	17	2540-01-383-5543	19207	12418547
270	17	2540-01-383-5134	19207	12418545
270	18	5310-00-984-3806	96906	MS51922-9
270	19	5310-01-312-4960	96906	MS27183-55
270	20	5365-01-436-3422	19207	12420635
270	21	5325-01-442-3597	19207	12420839
270	22	5306-01-421-6054	19207	12420771
270	23	5310-01-006-3919	96906	MS51859-10
270	24	5310-00-768-0318	96906	MS51967-14
270	25	5340-01-114-7712	19207	11682088-1
270	26	5306-01-K65-4316	19207	12419953-053
270	27	6150-01-442-8571	19207	12421416
270	28	5340-01-442-2651	19207	12421415
270	29	5310-00-811-6419	96906	MS21042-04
270	30	5930-00-683-1626	96906	MS24523-30
270	31	6150-01-442-8572	19207	12421405
270	32	5305-00-889-2999	96906	MS35206-217
270	33	5340-00-839-1981	01226	P304B
270	34	5310-01-065-4786	96906	MS27130-S56
270	35	5930-00-617-9718	96906	MS25224-3
270	36	5355-01-443-8112	08928	LK-6162032S3.021
270	37		19207	12421404
271	1	2540-01-437-1463	19207	57K1925
271	1	2540-01-393-2717	19207	57K1908
271	1	2540-01-385-9462	19207	57K1898
271	2	4710-01-388-5501	19207	12420279-003
271	3	2540-01-387-3991	19207	12420278-002
271	4	4710-01-391-3193	19207	12420279-002
271	5	2540-01-387-3988	19207	12420278-001
271	6	5340-01-K65-3946	19207	12420291
271	7		0FW39	12420281-015
271	7	2540-01-387-3987	19207	12420281
271	8	5365-01-438-2640	81348	MIL-R-3990 CL5-1

CROSS REFERENCE INDEXES

FIGURE AND ITEM NUMBER INDEX

FIGURE NO	ITEM NO	STOCK NUMBER	FSCM	PART NUMBER
				IN
271	9		19207	12420277-007
271	10	4710-01-391-3192	19207	12420275
271	11	4020-01-386-8148	0FW39	12420277-008
271	12	5306-01-387-6028	19207	12420280
271	13		19207	12420277-009
271	14	2540-01-387-3976	19207	12420278-003
271	15	5365-01-438-2640	81348	MIL-R-3990 CL5-1
				IN
271	16		QPKM9	WW-8X500
271	17	5306-01-387-6028	19207	12420280
271	18		19207	12421792
271	19	5340-00-297-6637	96906	MS51929-3
272	1	6115-01-432-2684	19207	57K1912
272	1	6115-01-431-5092	19207	57K1918
272	2	5325-00-074-3301	96906	MS21266-2N
272	3	5306-01-330-8490	19207	12414307-037
272	4	5340-01-439-0820	19207	12421345-002
272	5	5945-01-440-9799	00062	RPPD-200
272	6	5310-01-439-2543	81349	D70336/3-52
272	7	5310-01-364-4818	0H7H2	DJN439012
272	8	5310-01-288-1429	62445	1131132
272	9	5310-01-439-2542	81349	D70336/3-50
272	10	5310-01-374-1382	19207	12414315-003
272	11	5310-12-196-5989	D8286	DIN9021-5,3-100H
				V-C-B3B
272	12	5340-01-438-8822	19207	12421344
272	13		19207	12421451
272	14	5305-01-439-4830	19207	12414475-059
272	15		19207	12421341-002
272	15		19207	12421341-006
272	16		19207	12421341-004
272	16		19207	12421341-008
272	17		19207	12421341-005
272	17		19207	12421341-001
272	18		19207	12420899-001
272	19		19207	12421341-007
272	19		19207	12421341-003
272	20		19207	12420906-001
272	21	2920-01-436-9862	26405	1432563-CU
272	22	5310-00-637-9541	96906	MS35338-46
272	23	5310-00-080-6004	96906	MS27183-14
272	24	5310-00-732-0558	96906	MS51967-8
272	25	5999-01-423-5170	19207	12421186-001
272	26	5340-01-426-4418	19207	12421186-003
272	27	5310-01-369-3337	19207	12414308-018
272	28	5340-01-439-3756	19207	12421345-001
272	29		19207	12421349-001
272	30	5305-01-268-3656	15526	DIN933-M6X16-8.8
				-A4C
272	31		18076	S630H-8
272	32		19207	12421349-002

CROSS REFERENCE INDEXES

FIGURE AND ITEM NUMBER INDEX

FIGURE NO	ITEM NO	STOCK NUMBER	FSCM	PART NUMBER
272	33	5310-01-381-9945	19207	12414308-016
272	34	5940-00-660-3633	96906	MS25036-155
272	35	6115-01-433-8557	76761	N1216-1
272	36	3020-01-443-5093	19207	12420810
272	37	2920-01-362-5734	19207	12414341
273	1	5305-00-059-3659	96906	MS51958-63
273	2	5310-01-032-4827	76761	N9018
273	3	5310-01-032-4169	76761	N9016
273	4	5310-01-362-6171	76761	N9406
273	5	5310-01-362-7266	76761	N9374
273	6	3120-01-362-4502	76761	N9395
273	7	5999-01-440-0370	76761	N7441
273	8	5306-01-179-3346	76761	N9014
273	9	5310-01-046-0186	76761	N9015
273	10	5310-01-165-1312	76761	N9099
273	11	5999-01-440-0342	76761	N7442
273	12	3110-01-037-4661	76761	N9010
273	13	5325-01-034-2757	76761	N9009
273	14	5305-01-032-4165	76761	N9005
273	15	5310-01-136-4888	76761	N9265
273	16	2920-01-363-5179	76761	N9438
273	17	5325-01-032-4222	76761	N9008
273	18	5306-01-430-8791	76761	N9498
273	19	5310-01-439-0818	76761	N9574
273	20	5310-01-348-8385	76761	N9455
273	21	2920-01-363-5173	76761	N7312
273	22	5310-01-166-2373	76761	N9320
273	23	5310-01-050-5005	76761	N9091
273	24	5920-01-440-2790	76761	N9413
273	25	5310-01-232-1361	76761	N9331
273	26	5310-01-348-8392	76761	N9461
273	27	5310-01-348-8314	76761	N9453
273	28	2920-01-363-5172	76761	N7357
273	29	5315-01-166-2355	76761	N9040
273	30	2920-01-363-5147	76761	N7358
273	31	2920-01-363-5182	76761	N7395
273	32	3110-01-348-4867	76761	N9385
273	33	3120-01-362-5055	76761	N9405
273	34	5310-01-350-4257	76761	N9467
273	35	5310-01-350-8549	76761	N9465
273	36	6110-01-438-6252	76761	N3029
273	37	5305-01-362-6121	76761	N9199
273	38	5310-01-042-8391	13499	500-1114-003
273	39	5310-01-348-8398	76761	N9410
273	40	6115-01-349-5320	76761	N7309
273	41	5310-00-402-5220	19207	11649930
273	42	5310-01-050-6565	76761	N9063
273	43	5306-01-223-4345	76761	N9077
273	44	5310-01-232-1362	76761	N9338
273	45	4140-01-439-1956	76761	N9501
273	46	3120-01-439-4848	76761	N9575
273	47	5310-01-423-0781	76761	N9544

CROSS REFERENCE INDEXES

FIGURE AND ITEM NUMBER INDEX

FIGURE NO	ITEM NO	STOCK NUMBER	FSCM	PART NUMBER
274	1	3810-01-384-9668	19207	57K1215
274	2	2590-01-368-1119	27647	28519
274	3	6150-01-368-3166	12361	6-246-002509
274	4	2510-01-443-4585	12361	2-195-9-00578
274	5	5315-01-367-6425	09332	D16-45R
274	6	5925-01-411-1031	12361	2-195-3-00501
274	7		12361	2-195-1-00647
274	8	5340-01-367-9191	27647	25534
274	9		12361	6-511-001259
274	10	9905-01-368-5467	12361	7-679-002360
274	11	9905-01-368-5466	12361	7-679-002350
274	12	3950-01-368-7724	12361	2-195-9-00579
274	13	3810-01-173-4227	12361	7-962-000040
274	14	5310-00-637-9541	96906	MS35338-46
274	15	5305-00-269-3221	96906	MS90725-71
274	16	4010-01-369-3206	27647	25729
274	17	2540-01-367-9768	12361	7-585-000730
274	18	5310-01-293-2835	12361	7-660-160000
275	1	5360-01-398-6552	27647	28629
275	2	5305-01-397-5913	27647	28326
275	3	3830-01-397-7048	27647	25531
275	4	5945-01-397-2744	27647	13521
275	5	5340-01-409-0209	27647	25530
275	6	6150-01-397-4819	27647	28572
275	7	6150-01-397-4820	27647	28573
275	8	5310-01-398-1126	27647	27882
275	9	5340-01-398-8683	27647	28579
275	10	2590-01-397-5305	27647	28515
275	11	5340-01-397-0338	27647	28621
275	12	2590-01-399-1404	27647	29470
276	1	5305-01-211-3101	27647	13850
276	2		27647	27863
276	3	5330-01-211-0717	27647	13848
276	4	3020-01-209-4606	27647	13874
276	5	3020-01-209-4603	27647	13839
276	6	2590-01-185-7949	27647	14401
276	7	3010-01-397-8592	27647	14402
276	8	3120-01-306-3577	27647	13826
276	9	3010-01-397-8591	27647	25523
276	10	3020-01-397-2324	27647	29468
276	11	5305-01-397-5914	27647	7146
276	12	3950-01-397-7047	27647	29471
276	13	3120-01-322-0469	27647	13831
276	14	3950-01-399-4205	27647	25745
276	15	5305-01-397-5912	27647	23195
276	16	3040-01-399-6250	27647	13830
276	17	2530-01-397-5308	27647	13799
276	18	5340-01-397-0337	27647	28620
276	19	5325-01-397-0332	27647	1159
276	20	3020-01-397-2326	27647	6221
276	21	6105-01-397-2828	27647	29497
276	22	5975-01-135-9794	27647	2090

CROSS REFERENCE INDEXES

FIGURE AND ITEM NUMBER INDEX

FIGURE NO	ITEM NO	STOCK NUMBER	FSCM	PART NUMBER
276	23	5305-01-210-4967	27647	980074 5553
277	1	5365-00-804-2025	96906	MS16624-1087
277	2	5310-01-368-5465	12361	7-949-001151
277	3	3120-01-395-1383	12361	6-949-001166
277	4	3120-01-395-1386	70901	AP-1108-02
277	5	3020-01-294-8805	71041	H1086RH
277	6		12361	6-570-060521
277	7	3040-01-395-5244	12361	4-195-1-00860
277	8		12361	6-511-001260
277	9	5325-01-368-8703	12361	7-753-000238
277	10	5985-01-394-4637	12361	2-195-1-00648
277	11	5340-01-367-9135	34495	11840
277	12	5305-00-984-6212	96906	MS35206-265
277	13	5310-00-045-3296	96906	MS35338-43
277	14	5310-00-809-8546	96906	MS27183-8
277	15	5305-01-325-8388	96906	MS90725-113
277	16	5310-01-201-9955	81860	9810145-02
277	17	3120-01-367-6404	12361	6-200-040008
277	18	5325-01-368-2733	51814	WST-300
277	19	5306-00-225-8498	96906	MS90725-33
277	20	5310-01-259-6358	12361	7-949-000534
277	21	3120-01-394-7850	12361	7-069-001086
277	22	3020-01-395-3980	12361	7-490-000631
277	23	3040-01-411-5535	12361	2-195-1-00649
277	24	5315-01-397-7325	12361	7-689-001643
277	25	5306-00-226-4822	80204	B1821BH031C050N
277	26	5310-00-081-4219	96906	MS27183-12
277	27	5310-00-407-9566	96906	MS35338-45
277	28	3040-01-395-7279	12361	2-195-1-00650
277	29	5340-01-394-2397	12361	2-195-1-00651
277	30	5340-01-394-4477	12361	4-195-1-00871
278	1		12361	6-511-001263
278	1		12361	6-511-001263
278	2		12361	6-511-001261
278	3	5306-00-225-8503	96906	MS90725-38
278	3	5306-00-225-8503	96906	MS90725-38
278	4		12361	6-511-001262
278	5	5310-00-081-4219	96906	MS27183-12
278	5	5310-00-081-4219	96906	MS27183-12
278	6	5310-00-407-9566	96906	MS35338-45
278	6	5310-00-407-9566	96906	MS35338-45
278	7	5310-00-880-7744	96906	MS51967-5
278	7	5310-00-880-7744	96906	MS51967-5
279	1		12361	2-195-9-00577
279	2		12361	2-195-9-00576
279	3	5310-00-269-4040	96906	MS51922-49
279	4	4010-01-367-9102	12361	2-195-9-00582
279	5	5315-01-224-1537	09332	C5-20R
279	6	5310-00-068-5285	96906	MS27183-20
279	7	5305-00-724-7247	80204	B1821BH063C350N
279	8	5310-01-231-5759	96652	36-03
279	9	3040-01-368-8299	12361	2-195-9-00581

CROSS REFERENCE INDEXES

FIGURE AND ITEM NUMBER INDEX

FIGURE NO	ITEM NO	STOCK NUMBER	FSCM	PART NUMBER
279	10	3120-01-367-6894	12361	7-199-002668
279	11	3020-01-395-0417	12361	6-718-001106
279	12	4730-00-172-0010	96906	MS15002-1
279	13	3040-01-368-8300	12361	2-195-9-00580
279	14	5315-01-367-6426	09332	D16-30R
280	1	4730-01-374-0686	71468	CA121004-9
280	2	5935-01-369-1457	12361	7-892-000839
281	1	5305-01-207-7512	12361	7-111-080410
281	2	5925-01-395-1496	03010	QOU150
281	3	5305-00-151-5795	96906	MS35206-320
281	4	5340-01-394-5978	12361	6-679-002455
281	5	5935-01-399-7113	12361	7-892-000853
281	6	5310-01-235-2057	96906	MS51414-1
281	7	5305-00-889-3000	96906	MS35206-230
281	8	5340-01-367-9122	71468	CA121003-9
281	9	5330-00-298-0190	77820	10-36675-18
281	10		12361	6-176-002165
281	11	5310-00-934-9747	96906	MS35649-262
281	12	5935-01-369-0796	12361	7-709-000824
281	13	5975-00-296-1669	56501	2521
281	14	5330-01-394-2412	13508	5262
281	15	5310-00-269-4040	96906	MS51922-33
281	16	5310-00-934-9757	96906	MS35649-282
281	17		12361	6-512-001842
281	18	5940-00-113-8190	96906	MS25036-122
281	19	5310-01-310-1098	96906	MS51414-2
281	20	5310-00-765-3197	96906	MS27183-41
282	1		19207	57K1952
282	2		19207	12422058
282	3		19207	12421820
282	4	5306-00-211-8002	96906	MS51937-10
282	5		19207	12422059-001
282	6		19207	12422059-002
282	7		19207	12422055
282	8	5310-01-417-1262	19207	12414308-022
282	9		19207	12422053
282	10		19207	12422054
283	1	1005-01-381-5431	19207	57K1224
283	2	5305-01-387-6177	19207	12414419-136
283	3	5310-01-167-4064	21969	A 13 DIN125-ST
283	4	5310-01-381-9974	19207	12417948-005
283	5	5365-01-381-3976	19207	12418327
283	6	2510-01-384-1051	19207	12417568
283	7	5365-01-377-1995	0FW39	12414582-004
283	8	5305-01-341-8926	15526	933-M8X20
283	9	2540-01-K65-4312	62266	8.5746
283	10	5306-01-266-7779	81495	071 408 32
283	11	5310-01-155-1911	34914	990 3861
283	12	5305-01-178-7349	56161	10503805
283	13	5310-01-115-0762	19200	12524631-1
283	14	2590-01-382-6719	19207	12418362-004
283	15		19207	12418366-013

CROSS REFERENCE INDEXES

FIGURE AND ITEM NUMBER INDEX

FIGURE NO	ITEM NO	STOCK NUMBER	FSCM	PART NUMBER
283	16	4010-01-388-3680	84256	50996-8W
283	17	5310-01-381-9929	84256	ALS3-610-4.2
283	18	5340-01-439-0280	19207	12420484
283	19	5340-01-438-8924	19207	12420483
283	20	5315-01-439-3775	19207	12420482
283	21	5315-00-187-9382	96906	MS24665-385
283	22	2510-01-383-5135	19207	12418366-012
284	1	5305-01-158-0826	56161	10203657
284	2	5310-01-374-6990	19207	12414473-010
284	3	1095-00-763-7348	19207	11630529
284	4	5340-00-455-5899	19207	11630581
284	5	2590-00-264-8828	19207	11630594
285	1	4730-00-473-8357	81343	4-2 010102S
285	2	4720-01-439-9703	19207	12417926-004
285	3	4730-00-266-0543	96906	MS35869-45
285	4	4720-01-439-9699	19207	12417926-001
285	5	4730-00-921-3245	11083	7S7369
285	6	4730-00-407-0571	30327	129-B-08X24
285	7	4720-01-K65-1513	19207	12417926-002
285	8	4730-01-102-4123	81343	10-8 100202BA
285	9		19207	12420572-010X
285	10	5310-01-365-7236	19207	12414315-009
285	11	5310-01-363-0740	19207	12414473-014
285	12	5305-01-274-1264	15526	DIN933-M10X35-8. 8-A4C
285	13	4730-01-055-4013	81343	4-2 100202BA
285	14	4720-01-443-4746	19207	12420572-004X
285	15		0FW39	12414366-001
285	16	4810-01-368-0058	06721	N13552AD
285	17		06721	N11728GP
285	18		06721	602000-FP
285	19		06721	N-30250-A
285	20		06721	C11472J
285	21		06721	400156-A
285	22	5310-00-880-7744	96906	MS51967-5
285	23		06721	602000-GW
285	24		06721	N-11728-SZ
285	25		06721	N-11728-SV
285	26		06721	N-11728-ST
285	27		06721	300527
285	28		06721	201054-A
285	29		06721	102642
285	30		06721	102664A
285	31		06721	400158
285	32	2940-01-213-1135	06721	100696E
285	33		06721	102643
285	34		06721	30-X-402
285	35		06721	26W31008
285	36	4730-01-367-9967	06721	102651
285	37		06721	N-14149-F
285	38		06721	N10949F
285	39		06721	201051-A

CROSS REFERENCE INDEXES

FIGURE AND ITEM NUMBER INDEX

FIGURE NO	ITEM NO	STOCK NUMBER	FSCM	PART NUMBER
285	40		06721	N11728BC
285	41		06721	602000-HG
285	42		06721	102636-A
285	43		06721	N11728GT
285	44		06721	30-X-901
285	45		06721	201117
285	46		06721	201089-G
285	47		06721	201047-AA
286	1	4720-01-375-3594	59150	1775-822
286	2	2940-01-372-1541	59150	1755-725
286	3	4730-01-375-3572	0TE27	1074X4
287	1	4910-01-426-3974	62380	440.280
287	2	5120-01-412-1818	0FW39	90000003
287	3	5120-01-360-1918	0FW39	90000001
287	30	5220-01-388-1460	33287	J-38548-1
288	1	5180-01-356-8155	11083	1U6680
288	2	5140-01-373-6823	11083	6V7145
288	3	2910-01-360-6314	11083	1U8702
288	4	5120-01-353-1576	11083	TP4814
288	5	5120-01-372-2987	11083	1U7523
288	6	5120-01-373-3281	11083	1U6672
288	7	5120-01-372-3812	11083	1U7305
288	8	5210-01-372-3968	11083	1U8815
288	9	5120-01-291-3566	11083	1U7563
288	10	5120-01-289-6531	11083	1U7564
288	11	5120-01-372-4380	11083	1U6675
288	12	5210-01-360-4104	11083	5P4160
288	13	5210-01-149-5789	11083	3S3268
288	14	4910-01-361-2840	11083	4C5851
288	15	5306-01-360-1940	11083	8T4177
288	16	5306-01-360-1941	11083	8T7352
288	17	4910-01-360-8093	11083	1U6678
288	18	5210-01-366-4383	11083	1U6679
288	19	5210-01-372-3967	11083	6V6106
288	20	2815-01-123-5891	11083	5P0302
288	21	4910-01-361-2839	11083	4C4716
288	22	5120-01-335-1023	55719	NDM60A
288	23	5120-01-372-4376	11083	1U6673
288	24	5120-01-372-3966	11083	1U6681
288	25	5120-01-363-2795	11083	9U5120
288	26	5120-00-081-9074	11083	6V7918
288	27	5120-01-372-4375	11083	1U9563
288	28	5306-01-360-1969	11083	8T0267
288	29	5120-01-414-7398	33287	J38566
288	31	5120-01-415-3558	33287	J-39354
288	32	5120-01-362-2026	11083	1U7430
288	33	5120-01-362-2027	11083	1U7598
289	1	5120-01-388-4436	33287	J35923
289	2	5120-01-388-4439	33287	J35923-1
289	3	5120-01-388-5623	33287	J35923-2
289	4	5120-01-388-5617	33287	J35923-4
289	5	5120-01-388-5621	33287	J35923-3

CROSS REFERENCE INDEXES

FIGURE AND ITEM NUMBER INDEX

FIGURE NO	ITEM NO	STOCK NUMBER	FSCM	PART NUMBER
289	6	5120-01-391-3541	33287	J35922
289	7	5120-01-389-1223	33287	J 35922-2
289	8	5120-01-K61-9491	33287	J-35922-3
289	9	5120-01-389-1220	33287	J 35922-1
289	10	5120-01-391-5133	33287	J 38579
289	11	5120-01-391-5350	33287	J35979-2
289	12	5120-01-391-6913	33287	J 38579-1
289	13		33287	J-38565
289	14	5120-01-390-1104	33287	J 38569
289	15	5120-01-389-0658	33287	J 35921-1
289	16	5120-01-388-3660	33287	J38573
289	17	5120-00-677-2259	33287	J8092
289	18	5120-01-390-1105	33287	J 38568-3
289	19	4910-01-032-3128	11083	8S0602
289	20	5180-01-415-5896	11083	4C4462

By Order of the Secretary of the Army:

DENNIS J. REIMER
General, United States *Army*
Chief of Staff

Official:

JOEL B. HUDSON
Administrative Assistant to the
Secretary of the Army
05136

DISTRIBUTION: To be distributed in accordance with the initial distribution number (IDN) 380935 requirements for TM 9-2320-365-24P.

*U.S. GOVERNMENT PRINTING OFFICE: 1999-746-025/80088

RECOMMENDED CHANGES TO EQUIPMENT TECHNICAL PUBLICATIONS

THEN.. JOT DOWN THE DOPE ABOUT IT ON THIS FORM. CAREFULLY TEAR IT OUT, FOLD IT AND DROP IT IN THE MAIL.

SOMETHING WRONG WITH THIS PUBLICATION?

FROM: (PRINT YOUR COMPLETE ADDRESS)

DATE SENT

PUBLICATION NUMBER	PUBLICATION DATE	PUBLICATION TITLE
TM 9-2320-365-24P	17 JUN 98	REPAIR PARTS AND SPECIAL TOOLS LIST

BE EXACT _ PINPOINT WHERE IT IS

PAGE NO.	PARA-GRAPH	PICTURE NO.	TABLE NO.	IN THIS SPACE TELL WHAT IS WRONG AND WHAT SHOULD BE DONE ABOUT IT:
		Fig 219		Item 2 in illustration should point to screw that attaches lanyard, item 3.

SAMPLE

PRINTED NAME, GRADE OR TITLE, AND TELEPHONE NUMBER

SIGN HERE:

DA FORM 1 JUL 79 2028-2

PREVIOUS EDITIONS ARE OBSOLETE.

P.S. - IF YOUR OUTFIT WANTS TO KNOW ABOUT YOUR RECOMMENDATION MAKE A CARBON COPY OF THIS AND GIVE IT TO YOUR HEADQUARTERS.

REVERSE OF DA FORM 2029-2 AMSMC OP 103-85

TEAR ALONG PERFORATED LINE

FILL IN YOUR
UNITS ADDRESS

DEPARTMENT OF THE ARMY

OFFICIAL BUSINESS

NO POSTAGE
NECESSARY
IF MAILED
IN THE
UNITED STATES

BUSINESS REPLY MAIL

FIRST CLASS PERMIT NO. 82 ROCK ISLAND IL

POSTAGE WILL BE PAID BY ROCK ISLAND ARSENAL

Director
Armament and Chemical Acquisition
and Logistics Activity
ATTN: AMSTA-AC-NML
Rock Island, IL 61201-9948

RECOMMENDED CHANGES TO EQUIPMENT TECHNICAL PUBLICATIONS

THEN.. JOT DOWN THE DOPE ABOUT IT ON THIS FORM. CAREFULLY TEAR IT OUT, FOLD IT AND DROP IT IN THE MAIL.

SOMETHING WRONG WITH THIS PUBLICATION?

FROM: (PRINT YOUR COMPLETE ADDRESS)

DATE SENT

PUBLICATION NUMBER	PUBLICATION DATE	PUBLICATION TITLE
TM 9-2320-365-24P	17 JUN 98	REPAIR PARTS AND SPECIAL TOOLS LIST

BE EXACT .. PINPOINT WHERE IT IS

PAGE NO.	PARA-GRAPH	PICTURE NO.	TABLE NO.	IN THIS SPACE TELL WHAT IS WRONG AND WHAT SHOULD BE DONE ABOUT IT:

PRINTED NAME, GRADE OR TITLE, AND TELEPHONE NUMBER

SIGN HERE:

DA FORM 1 JUL 79 2028-2

PREVIOUS EDITIONS ARE OBSOLETE.

P.S. - IF YOUR OUTFIT WANTS TO KNOW ABOUT YOUR RECOMMENDATION MAKE A CARBON COPY OF THIS AND GIVE IT TO YOUR HEADQUARTERS.

REVERSE OF DA FORM 2028-2 AMGMC OP 103-85

FILL IN YOUR
UNITS ADDRESS

DEPARTMENT OF THE ARMY

OFFICIAL BUSINESS

NO POSTAGE
NECESSARY
IF MAILED
IN THE
UNITED STATES

BUSINESS REPLY MAIL

FIRST CLASS PERMIT NO. 82 ROCK ISLAND IL

POSTAGE WILL BE PAID BY ROCK ISLAND ARSENAL

Director
Armament and Chemical Acquisition
and Logistics Activity
ATTN: AMSTA-AC-NML
Rock Island, IL 61201-9948

TEAR ALONG PERFORATED LINE

RECOMMENDED CHANGES TO EQUIPMENT TECHNICAL PUBLICATIONS

THEN.. JOT DOWN THE DOPE ABOUT IT ON THIS FORM. CAREFULLY TEAR IT OUT, FOLD IT AND DROP IT IN THE MAIL.

SOMETHING WRONG WITH THIS PUBLICATION?

FROM: (PRINT YOUR COMPLETE ADDRESS)

DATE SENT

PUBLICATION NUMBER	PUBLICATION DATE	PUBLICATION TITLE
TM 9-2320-365-24P	17 JUN 98	REPAIR PARTS AND SPECIAL TOOLS LIST

BE EXACT .. PINPOINT WHERE IT IS

PAGE NO.	PARA-GRAPH	PICTURE NO.	TABLE NO.

IN THIS SPACE TELL WHAT IS WRONG AND WHAT SHOULD BE DONE ABOUT IT:

PRINTED NAME, GRADE OR TITLE, AND TELEPHONE NUMBER

SIGN HERE:

DA FORM 1 JUL 79 2028-2

PREVIOUS EDITIONS ARE OBSOLETE.

P.S. - IF YOUR OUTFIT WANTS TO KNOW ABOUT YOUR RECOMMENDATION MAKE A CARBON COPY OF THIS AND GIVE IT TO YOUR HEADQUARTERS.

REVERSE OF DA FORM 2029-2 AMSMC OP 100-85

TEAR ALONG PERFORATED LINE

FILL IN YOUR
UNITS ADDRESS

DEPARTMENT OF THE ARMY

OFFICIAL BUSINESS

NO POSTAGE
NECESSARY
IF MAILED
IN THE
UNITED STATES

BUSINESS REPLY MAIL

FIRST CLASS PERMIT NO. 82 ROCK ISLAND IL

POSTAGE WILL BE PAID BY ROCK ISLAND ARSENAL

Director
Armament and Chemical Acquisition
and Logistics Activity
ATTN: AMSTA-AC-NML
Rock Island, IL 61201-9948

RECOMMENDED CHANGES TO EQUIPMENT TECHNICAL PUBLICATIONS

THEN.. JOT DOWN THE DOPE ABOUT IT ON THIS FORM. CAREFULLY TEAR IT OUT, FOLD IT AND DROP IT IN THE MAIL.

SOMETHING WRONG WITH THIS PUBLICATION?

FROM: (PRINT YOUR COMPLETE ADDRESS)

DATE SENT

PUBLICATION NUMBER	PUBLICATION DATE	PUBLICATION TITLE
TM 9-2320-365-24P	17 JUN 98	REPAIR PARTS AND SPECIAL TOOLS LIST

BE EXACT .. PINPOINT WHERE IT IS

PAGE NO.	PARA-GRAPH	PICTURE NO.	TABLE NO.	IN THIS SPACE TELL WHAT IS WRONG AND WHAT SHOULD BE DONE ABOUT IT:

PRINTED NAME, GRADE OR TITLE, AND TELEPHONE NUMBER

SIGN HERE:

DA FORM 1 JUL 79 2028-2

PREVIOUS EDITIONS ARE OBSOLETE.

P.S. - IF YOUR OUTFIT WANTS TO KNOW ABOUT YOUR RECOMMENDATION MAKE A CARBON COPY OF THIS AND GIVE IT TO YOUR HEADQUARTERS.

REVERSE OF DA FORM 2028-2 AMSMC OP 100-85

TEAR ALONG PERFORATED LINE

FILL IN YOUR
UNITS ADDRESS

DEPARTMENT OF THE ARMY

OFFICIAL BUSINESS

NO POSTAGE
NECESSARY
IF MAILED
IN THE
UNITED STATES

BUSINESS REPLY MAIL

FIRST CLASS PERMIT NO. 82 ROCK ISLAND IL

POSTAGE WILL BE PAID BY ROCK ISLAND ARSENAL

Director
Armament and Chemical Acquisition
and Logistics Activity
ATTN: AMSTA-AC-NML
Rock Island, IL 61201-9948

PIN: 074566-000