ARMY TM 9-2320-387-24P
AIR FORCE TO 36A12-1A-3064
MARINE CORPS TM 11033-INP
(SUPERSEDES TM 9-2320-387-24P, 1 SEPTEMBER 1998)

TECHNICAL MANUAL

UNIT, DIRECT SUPPORT, AND GENERAL SUPPORT MAINTENANCE REPAIR PARTS AND SPECIAL TOOLS LIST

FOR

TRUCK, UTILITY: S250 SHELTER CARRIER, 4X4, M1113 (2320-01-412-0143) (EIC: B6B);

TRUCK, UTILITY: UP-ARMORED CARRIER, 4X4, M1114 (2320-01-413-3739) (EIC: B6C);

TRUCK, UTILITY: EXPANDED CAPACITY, ARMAMENT CARRIER, M1151 (2320-01-518-7330) (EIC: BA5);

TRUCK, UTILITY: EXPANDED CAPACITY ARMAMENT CARRIER, IAP/ARMOR READY, M1151A1 (2320-01-540-2038) (EIC: BEG);

TRUCK, UTILITY: EXPANDED CAPACITY, ENHANCED, M1152 (2320-01-518-7332) (EIC: BA6);

TRUCK, UTILITY: EXPANDED CAPACITY, ENHANCED, IAP/ARMOR READY, M1152A1 (2320-01-540-2007) (EIC: BEH);

TRUCK, UTILITY: COMMAND AND CONTROL/GENERAL PURPOSE VEHICLE, M1165 (2320-01-540-1993) (EIC: BEK);

TRUCK, UTILITY: COMMAND AND CONTROL/GENERAL PURPOSE VEHICLE, IAP/ARMOR READY, M1165A1 (2320-01-540-2017) (EIC: BEJ);

TRUCK, UTILITY: EXPANDED CAPACITY, TOW ITAS CARRIER, M1167 (2320-01-544-9638).

DISTRIBUTION STATEMENT A: Approved for public release; distribution is unlimited.

HEADQUARTERS, DEPARTMENTS OF THE ARMY
AND THE AIR FORCE, AND MARINE CORPS

MARCH 2002
PCN 184 110333 00

ARMY TM 9-2320-387-24P
AIR FORCE TO 36A12-1A-3064
MARINE CORPS TM 11033-INP

CHANGE NO. 5

**HEADQUARTERS
DEPARTMENTS OF THE ARMY,
THE AIR FORCE, AND MARINE CORPS
WASHINGTON, D.C. 31 *AUGUST 2009***

TECHNICAL MANUAL

UNIT, DIRECT SUPPORT, AND GENERAL SUPPORT MAINTENANCE REPAIR PARTS AND SPECIAL TOOLS LIST FOR

TRUCK, UTILITY: S250 SHELTER CARRIER, 4X4, M1113 (2320-01-412-0143) (EIC: B6B)

TRUCK, UTILITY: UP-ARMORED CARRIER, 4X4, M1114 (2320-01-413-3739) (EIC: B6C)

TRUCK, UTILITY: EXPANDED CAPACITY, ARMAMENT CARRIER, M1151 (2320-01-518-7330) (EIC: BA5)

TRUCK, UTILITY: EXPANDED CAPACITY ARMAMENT CARRIER, IAP/ARMOR READY, M1151A1 (2320-01-540-2038) (EIC: BEG)

TRUCK, UTILITY: EXPANDED CAPACITY, ENHANCED, M1152 (2320-01-518-7332) (EIC: BA6)

TRUCK, UTILITY: EXPANDED CAPACITY, ENHANCED, IAP/ARMOR READY, M1152A1 (2320-01-540-2007) (EIC: BEH)

TRUCK, UTILITY: COMMAND AND CONTROL/GENERAL PURPOSE VEHICLE, M1165 (2320-01-540-1993) (EIC: BEK)

TRUCK, UTILITY: COMMAND AND CONTROL/GENERAL PURPOSE VEHICLE, IAP/ARMOR READY, M1165A1 (2320-01-540-2017) (EIC: BEJ)

TRUCK, UTILITY: EXPANDED CAPACITY, TOW ITAS CARRIER, M1167 (2320-01-544-9638)

Current as of 15 May 2009

TM 9-2320-387-24P, 31 March 2002, is changed as follows:

1. One new model has been added to the front cover . The new cover, located at the end of the change package, replaces the existing cover.
2. Remove old pages and insert new pages as indicated below .
3. New or changed material is indicated by a vertical bar in the mar gin of the page and an asterisk (*) next to changed item numbers.
4. File this change sheet in front of the publication for reference purposes.
5. New models have been added.

DISTRIBUTION STATEMENT A: Approved for public release; distribution is unlimited.

Marine Corps PCN 184 110333 05

Remove pages	Insert pages
A through D	A through E/(F blank)
i through xiii/(xiv blank)	i through xvi
0001 00-1 and 0001 00-2	0001 00-1 and 0001 00-2
0001 00-5 and 0001 00-6	0001 00-5 and 0001 00-6
0012 00-1 through Figure 13	0012 00-1 through Figure 13
0035 00-1 through Figure 41	0035 00-1 through Figure 41
0043 02-1 through Figure 45	0043 02-1 through Figure 45
0052 01-1 and 0052 01-2	0052 01-1 and 0052 01-2
0065 00-1 through Figure 66	0065 00-1 through Figure 66
Figure 70A through Figure 71	Figure 70A through Figure 71
0085 00-1 and Figure 85	0085 00-1 and Figure 85
Figure 99 through Figure 105	Figure 99 through Figure 105
0113 00-1 through 0140 00-1	0113 00-1 through 0140 00-1
0141 00-1 through Figure 145	0141 00-1 through Figure 145
0149 00-1 through Figure 151	0149 00-1 through Figure 151
0153 00-1 through Figure 157	0153 00-1 through Figure 157
0163 00-1 through Figure 165	0163 00-1 through Figure 165
None	Figure 166B through 0167 02-2
Figure 167F through 0168 06-2	Figure 167F through 0168 06-2
0168 18-1 and Figure 168	0168 18-1 through Figure 168
0170 09-1 and Figure 170	0170 09-1 through Figure 170
None	Figure 170A through 0171 01-2
0190 00-1 through Figure 189E	0190 00-1 through Figure 189E
0190 08-1 through Figure 189O	0190 08-1 through Figure 189O
0190 16-1 and 0190 16-2	0190 16-1 and 0190 16-2
0196 04-1 through Figure 195I	0196 04-1 through Figure 195I
None	Figure 200A through 0201 08-2
Figure 202	Figure 201D through Figure 202
Figure 203	Figure 202C through Figure 203
None	Figure 204A through 0205 02-2
Figure 206	Figure 205B through Figure 206
Figure 208	Figure 207B through Figure 208
0210 01-1 and Figure 210	0210 01-1 through Figure 210
0214 01-1 and 0214 01-2	0214 01-1 and 0214 01-2
0218 01-1 through Figure 218	0218 01-1 through Figure 218
0221 01-1 and Figure 221	0221 01-1 through Figure 221
0222 03-1 and Figure 222	0222 03-1 and Figure 222
0226 10-1 and Figure 226	0226 10-1 through Figure 226
Figure 227	Figure 226A through Figure 227
0229 01-1 through Figure 229	0229 01-1 through Figure 229
Figure 231	Figure 230B through Figure 231
0236 01-1 and Figure 236	0236 01-1 and Figure 236
0239 00-1 through Figure 240	0239 00-1 through Figure 240
0267 16-3 through Figure 268	0267 16-3 through Figure 268
0275 01-1 through Figure 275	0275 01-1 through Figure 275
0277 04-1 through Figure 277	0277 04-1 through Figure 277
0282 01-1 through Figure 282	0282 01-1 through Figure 282
0288 01-1 through Figure 288	0288 01-1 through Figure 288
0289 01-1	0289 01-1
0290 00-1 through Figure 289	0290 00-1 through Figure 289
0306 00-1 through 0307 00-208	0306 00-1 through 0307 00-241
Cover	Cover

By Order of the Secretary of the Army:

GEORGE W. CASEY, JR.
General, United States Army
Chief of Staff

Official:



JOYCE E. MORROW
Administrative Assistant to the
Secretary of the Army
0830507

By Order of the Secretary of the Air Force:

JOHN P. JUMPER
General, United States Air Force
Chief of Staff

Official:

GREGORY S. MARTIN
General, United States Air Force
Commander, Air Force Materiel Command

By Order of the Marine Corps:

MICHAEL W. EVERLY
Program Manager,
Motor Transportation (PMM151)
Marine Corps Systems Command

Distribution:

To be distributed in accordance with the initial distribution number (IDN) 381022, requirements for TM 9-2320-387-24P.
MARINE CORPS DISTRIBUTION: PCN 184 110333 05

ARMY TM 9-2320-387-24P
AIR FORCE TO 36A12-1A-3064
MARINE CORPS TM 11033-INP

CHANGE

NO. 4

HEADQUARTERS
DEPARTMENTS OF THE ARMY,
THE AIR FORCE, AND MARINE CORPS
WASHINGTON, D.C. 3 MARCH 2008

TECHNICAL MANUAL

UNIT, DIRECT SUPPORT, AND GENERAL SUPPORT MAINTENANCE REPAIR PARTS AND SPECIAL TOOLS LIST FOR

TRUCK, UTILITY: S250 SHELTER CARRIER, 4X4, M1113 (2320-01-412-0143) (EIC: B6B)

TRUCK, UTILITY: UP-ARMORED CARRIER, 4X4, M1114 (2320-01-413-3739) (EIC: B6C)

TRUCK, UTILITY: EXPANDED CAPACITY, ARMAMENT CARRIER, M1151 (2320-01-518-7330) (EIC: BA5)

TRUCK, UTILITY: EXPANDED CAPACITY ARMAMENT CARRIER, IAP/ARMOR READY, M1151A1 (2320-01-540-2038)

TRUCK, UTILITY: EXPANDED CAPACITY, ENHANCED, M1152 (2320-01-518-7332) (EIC: BA6)

TRUCK, UTILITY: EXPANDED CAPACITY, ENHANCED, IAP/ARMOR READY, M1152A1 (2320-01-540-2007)

TRUCK, UTILITY: COMMAND AND CONTROL/GENERAL PURPOSE VEHICLE, M1165 (2320-01-540-1993)

TRUCK, UTILITY: COMMAND AND CONTROL/GENERAL PURPOSE VEHICLE, IAP/ARMOR READY, M1165A1 (2320-01-540-2017)

Current as of 22 February 2008

TM 9-2320-387-24P, 31 March 2002, is changed as follows:

1. Remove old pages and insert new pages as indicated below.
2. New or changed material is indicated by a vertical bar in the margin of the page.
3. File this change sheet in front of the publication for reference purposes.

Approved for public release; distribution is unlimited.

Marine Corps Publication Control Number: 184 110333 04

Remove pages	Insert pages
A through D	A through D
i and ii	i and ii
v through xi/(xii blank)	v through xiii/(xiv blank)
0001 00-1 through 0001 00-10	0001 00-1 through 0001 00-6
Figure 168	Figure 167F through Figure 168
Figure 170	Figure 169A through Figure 170
0189 00-1 and Figure 189	0189 00-1 through Figure 189
0190 04-1 through Figure 190	0190 04-1 through Figure 190
0196 00-1 and Figure 196	0196-00-1 through Figure 196
None	Figure 201C through 202-03-2
0203 00-1 through Figure 203	0203 00-1 through Figure 203
0221 00-1 and Figure 221	0221 00-1 through Figure 221
0222 01-1 and Figure 222	0222 01-1 through Figure 222
0266 00-1 and Figure 266	0266 00-1 through Figure 266
0267 05-1 and Figure 267	0267 05-1 through Figure 267
Figure 276G through Figure 277	Figure 276G through Figure 277
0291 00-1 and 0291 00-2	0291 00-1 and 0291 00-2
0306 00-1 through 0306 00-87	0306 00-1 through 0306 00-90
0307 00-1 through 0307 00-179	0307 00-1 through 0307-00-208

By Order of the Secretary of the Army:

GEORGE W. CASEY, JR.
General, United States Army
Chief of Staff

Official:

JOYCE E. MORROW
Administrative Assistant to the
Secretary of the Army
0721904

By Order of the Secretary of the Air Force:

JOHN P. JUMPER
General, United States Air Force
Chief of Staff

Official:

GREGORY S. MARTIN
General, United States Air Force
Commander, Air Force Materiel Command

By Order of the Marine Corps:

S. I. SCHULER
Colonel, USMC
Program Manager Motor
Transportation (PMM151)
Marine Corps Systems Command

Distribution:

To be distributed in accordance with the initial distribution number (IDN) 381022, requirements for TM 9-2320-387-24P.
MARINE CORPS DISTRIBUTION: PCN 184 110333 04

ARMY TM 9-2320-387-24P
AIR FORCE TO 36A12-1A-3064
MARINE CORPS TM 11033-INP

CHANGE

NO. 3

HEADQUARTERS
DEPARTMENTS OF THE ARMY,
THE AIR FORCE, AND MARINE CORPS
WASHINGTON, D.C. 28 FEBRUARY 2007

TECHNICAL MANUAL

UNIT, DIRECT SUPPORT, AND GENERAL SUPPORT MAINTENANCE REPAIR PARTS AND SPECIAL TOOLS LIST

FOR

TRUCK, UTILITY: S250 SHELTER CARRIER, 4X4, M1113
(2320-01-412-0143) (EIC: B6B);

TRUCK, UTILITY: UP-ARMORED CARRIER, 4X4, M1114
(2320-01-413-3739) (EIC: B6C);

TRUCK, UTILITY: EXPANDED CAPACITY, ARMAMENT CARRIER, M1151
(2320-01-518-7330) (EIC: BA5);

TRUCK, UTILITY: EXPANDED CAPACITY, ARMAMENT CARRIER, IAP/ARMOR READY, M1151A1
(2320-01-540-2038);

TRUCK, UTILITY: EXPANDED CAPACITY, ENHANCED, M1152
(2320-01-518-7332) (EIC: BA6);

TRUCK, UTILITY: EXPANDED CAPACITY, ENHANCED, IAP/ARMOR READY, M1152A1
(2320-01-540-2007);

TRUCK, UTILITY: COMMAND AND CONTROL/GENERAL PURPOSE VEHICLE, M1165
(2320-01-540-1993);

TRUCK, UTILITY: COMMAND AND CONTROL/GENERAL PURPOSE VEHICLE,
IAP/ARMOR READY, M1165A1
(2320-01-540-2017).

Current as of 28 February 2007

TM 9-2320-387-24P, 31 March 2002, is changed as follows:

1. Four new models have been added to the front cover. The new cover, located at the end of the change package, replaces the existing cover.
2. Remove old pages and insert new pages as indicated below.
3. New or changed material is indicated by a vertical bar in the margin of the page.
4. File this change sheet in front of the publication for reference purposes.

Approved for public release; distribution is unlimited.

Remove pages	Insert pages
A and B	A and B
i and ii	i and ii
0001 00-1 through 0001 00-6	0001 00-1 through 0001 00-10
Cover	Cover

By Order of the Secretary of the Army:

GEORGE W. CASEY, JR.
General, United States Army
Chief of Staff

Official:



JOYCE E. MORROW
Administrative Assistant to the
Secretary of the Army
0703804

By Order of the Secretary of the Air Force:

JOHN P. JUMPER
General, United States Air Force
Chief of Staff

Official:

GREGORY S. MARTIN
General, United States Air Force
Commander, Air Force Materiel Command

S. I. SCHULER
Colonel, USMC
Program Manager Motor
Transportation (PMM151)
Marine Corps Systems Command

Distribution:

To be distributed in accordance with the initial distribution number (IDN) 381022, requirements for TM 9-2320-387-24P.

ARMY TM 9-2320-387-24P
AIR FORCE TO 36A12-1A-3064
MARINE CORPS TM 11033-INP

CHANGE

NO. 2

HEADQUARTERS
DEPARTMENTS OF THE ARMY,
THE AIR FORCE, AND MARINE CORPS
WASHINGTON, D.C. 31 MAY 2006

TECHNICAL MANUAL

UNIT, DIRECT SUPPORT, AND GENERAL SUPPORT MAINTENANCE REPAIR PARTS AND SPECIAL TOOLS LIST

FOR

TRUCK, UTILITY: S250 SHELTER CARRIER, 4X4, M1113 (2320-01-412-0143) (EIC: B6B);

TRUCK, UTILITY: UP-ARMORED CARRIER, 4X4, M1114 (2320-01-413-3739) (EIC: B6C);

TRUCK, UTILITY: EXPANDED CAPACITY, ARMAMENT CARRIER, 4X4, M1151 (2320-01-518-7330);

TRUCK, UTILITY: EXPANDED CAPACITY, ENHANCED, 4X4, M1152 (2320-01-518-7332).

Current as of 30 January 2006

TM 9-2320-387-24P, 31 March 2002, is changed as follows:

1. Two new models have been added to the front cover. The new cover, located at the end of the change package, replaces the existing cover.
2. Remove old pages and insert new pages as indicated below.
3. New or changed material is indicated by a vertical bar in the margin of the page.
4. File this change sheet in front of the publication for reference purposes.

Approved for public release; distribution is unlimited.

Remove pages	Insert pages
A-C/(D blank)	A-D
i-ix/(x blank)	i-xi (xii blank)
0001 00-1 and 0001 00-2	0001-00-1 and 0001 00-2
0001 00-5 and 0001 00-6	0001 00-5 and 0001 00-6
0011 00-1 through Figure 13	0011 00-1 through Figure 13
0015 00-1 and Figure 15	0015 00-1 and Figure 15
0021 00-1 and Figure 21	0021 00-1 and Figure 21
0025 00-1 and 0025 00-2	0025 00-1 and 0025 00-2
0026 00-1 and and 0026 00-2	0026 00-1 and 0026 00-2
Figure 29 through Figure 31	Figure 29 through Figure 31
0037 00-1 and Figure 37	0037 00-1 and Figure 37
0039 00-1 through Figure 40	0039 00-1 through Figure 42A
0043 02-1 and Figure 43	0043 02-1 and Figure 43
0046 01-1 and Figure 46	0046 01-1 and Figure 46
0051 00-1 through Figure 59	0051 00-1 through Figure 59
0061 00-1 through Figure 62	0061 00-1 through Figure 62
0071 00 and Figure 71	Figure 70A through Figure 71
0075 00-1 through Figure 76	0075 00-1 through Figure 76
0083 00-1 and Figure 83	0083 00-1 through Figure 83
0084 00-1 through Figure 85	Figure 84 through Figure 85
0087 00-1 through 0089 00-2	0087 00-1 through 0089 00-2
Figure 99 through Figure 101	Figure 99 through Figure 101
0107 00-1 and Figure 107	0107 00-1 and Figure 107
0115 00-1 and Figure 115	0115 00-1 and Figure 115
0120 00-1 through Figure 121	0120 00-1 through Figure 121
0126 00-1 through Figure 128	0126 00-1 through Figure 128
0129 00-1 through Figure 131	0129 00-1 through Figure 131
0133 00-1 through Figure 135	0133 00-1 through Figure 135
0137 00-1 and Figure 137	0137 00-1 and Figure 137
0140 00-1	0140 00-1
0141 00-1 through Figure 143	0141 00-1 through Figure 143
0145 00-1 and Figure 145	0145 00-1 and Figure 145
0147 00-1 and Figure 147	0147 00-1 and Figure 147
0154 00-1 through 0159 00-2	0154 00-1 through 0159 00-2
0161 00-1 through Figure 163	0161 00-1 through Figure 163
0165 00-1 through Figure 172	0165 00-1 through Figure 172
0182 00-1 and Figure 182	0182 00-1 and Figure 182
0185 00-1 through Figure 186	0185 00-1 through Figure 186
0190 00-1 and Figure 190	0190 00-1 through Figure 190
0195 00-1 through 0201 00-2	0195 00-1 through 0201 00-2
None	Figure 201A through Figure 203
Figure 204 through 0206 00-1	Figure 204 through 0206 01-2
207 00-1 and 0207 00-2	0207 00-1 and 0207 00-2
Figure 208 through 0209 00-2	Figure 207A through 0209 01-2
0210 00-1 through Figure 211	0210 00-1 through Figure 211
0213 00-1 and 0213 00-2	0213 00-1 and 0213 00-2
0214 00-1 and 0214 00-2	0214 00-1 through 0214 01-2
0215 00-1 through Figure 218	0215 00-1 through Figure 218
0221 00-1 and Figure 221	0221 00-1 through 0222 01-1
None	Figure 223A through 0224 01-2
0226 01-1 and Figure 225B	0226 01-1 and Figure 225B
0226 10-1 through 0228 00-2	0226 10-1 through 0228 04-4
0227 00-1 through 0229 01-2	0227 00-1 through 0229 01-2
Figure 229 through Figure 230	Figure 229 through 0231 01-2
0232 00-1 through 0233 00-2	0232 00-1 through 0233 00-2
0235 00-1 through Figure 239	0235 00-1 through Figure 239
0244 00-1 and Figure 244	0244 00-1 and Figure 244
0248 00-1 through 0249 00-2	0248 00-1 through 0249 00-2

3. File this change sheet in front of the publication for reference purposes.

Remove pages	Insert pages
Figure 249A through 0250 01-2	Figure 249A through 0250 01-2
None	Figure 249F through 0250 10-2
Figure 250 through 0252 00-2	Figure 250 through 0252 00-2
0253 00-1 and 0253 00-2	0253 00-1 and 0253 00-2
0256 00-1 through Figure 259	0256 00-1 through Figure 259
0265 00-1 through 0267 00-2	0265 00-1 through 0267 00-2
Figure 267 through Figure 268	Figure 266D through Figure 268
0273 00-1 through 0274 00-2	0273 00-1 through 0274 00-2
0274 01-1 through Figure 277	0274 01-1 through Figure 277
0280 00-1 through Figure 280	0280 00-1 through Figure 280
0282 00-1 through Figure 282A	0282 00-1 through Figure 282A
0287 00-1 and Figure 287	0287 00-1 and Figure 287
0288 00-1 and Figure 288	0288 00-1 through Figure 288
0289 00-1	0289 00-1 through 0289 01-1
0290 00-5 and 0290 00-6	0290 00-5 and 0290 00-6
0290 00-09 through 0290 00-12	0290 00-09 through 0290 00-12
0291 00-1 and 0291 00-2	0291 00-1 and 0291 00-2
0304 00-1 and 0304 00-2	0304 00-1 and 0304 00-2
0306 00-1 through 0306 00-62	0306 00-1 through 0306 00-62
0307 00-1 through 0307 00-119	0307 00-1 through 0307 00-179
Cover	Cover

By Order of the Secretary of the Army:

PETER J. SCHOOMAKER
General, United States Army
Chief of Staff

Official:



JOYCE E. MORROW
Administrative Assistant to the
Secretary of the Army
0602407

By Order of the Secretary of the Air Force:

JOHN P. JUMPER
General, United States Air Force
Chief of Staff

Official:

GREGORY S. MARTIN
General, United States Air Force
Commander, Air Force Materiel Command

S. I. SCHULER
Colonel, USMC
Program Manager Motor
Transportation (PMM151)
Marine Corps Systems Command

Distribution:

To be distributed in accordance with the initial distribution number (IDN) 381022, requirements for TM 9-2320-387-24P.

ARMY TM 9-2320-387-24P
AIR FORCE TO 36A12-1A-3064

CHANGE

NO. 1

HEADQUARTERS
DEPARTMENTS OF THE ARMY,
AND THE AIR FORCE
WASHINGTON, D.C. 30 July 2004

TECHNICAL MANUAL

UNIT, DIRECT SUPPORT, AND GENERAL SUPPORT MAINTENANCE REPAIR PARTS AND SPECIAL TOOLS LIST

FOR

TRUCK, UTILITY: UP-ARMORED CARRIER, 4X4, M1113 (2320-01-412-0143 (EIC: B6B);

TRUCK, UTILITY: S250 SHELTER CARRIER, 4X4, M1114 (2320-01-413-3739) (EIC: B6C).

Current as of 18 December 2003

TM 9-2320-387-24P, 31 March 2002, is changed as follows:

1. Remove old pages and insert new pages as indicated below.
2. New or changed material is indicated by a vertical bar in the margin of the page and an asterisk (*) next to changed item number.

Approved for public release; distribution is unlimited.

Remove pages	Insert pages
A/(B blank)	A-C/(D blank)
i-viii	i-ix/(x blank)
0003 00-1 through Figure 5	0003 00-1 through Figure 5
0008 00-1 through Figure 10	0008 00-1 through Figure 10
0012 00-1 through Figure 13	0012 00-1 through Figure 13
0015 00-1 through Figure 23	0015 00-1 through Figure 23
0026 00-1 and 0026 00-2	0026 00-1 and 0026 00-2
0027 00-1 through Figure 30	0027 00-1 through Figure 30
0032 00-1 and Figure 32	0032 00-1 and Figure 32
0034 00-1 through Figure 38	0034 00-1 through Figure 38
0040 00-1 through Figure 50	0040 00-1 through Figure 50
0055 00-1 through Figure 58	0055 00-1 through Figure 58
0061 00-1 and Figure 61	0061 00-1 and Figure 61
0063 00-1 through Figure 67	0063 00-1 through Figure 67
0070 00-1 through Figure 75	0070 00-1 through Figure 75
0079 00-1 through Figure 80	0079 00-1 through Figure 80
0082 00-1 and Figure 82	0082 00-1 and Figure 82
0084 00-1 through 0089 00-2	0084 00-1 through 0089 00-2
0092 00-1 through Figure 98	0092 00-1 through Figure 98
0101 00-1 through 0104 00-2	0101 00-1 through 0104 00-2
0105 00-1 through Figure 106	0105 00-1 through Figure 106
0109 00-1 through Figure 111	0109 00-1 through Figure 111
0113 00-1 through Figure 121	0113 00-1 through Figure 121
0124 00-1 through Figure 129	0124 00-1 through Figure 129
0132 00-1 and Figure 132	0132 00-1 and Figure 132
0139 00-1 through Figure 152	0139 00-1 through Figure 152
0155 00-1 through 0158-2	0155 00-1 through 0158-2
0159 00-1 and 0159 00-2	0159 00-1 and 0159 00-2
0160 00-1 through Figure 162	0160 00-1 through Figure 162
0164 00-1 through 0171 00-2	0164 00-1 through 0171 00-2
0172 00-1 through Figure 178	0172 00-1 through Figure 178
0180 00-1 through 0184 00-2	0180 00-1 through 0184 00-2
0185 00-1 through Figure 187	0185 00-1 through Figure 187
0189 00-1 through Figure 196	0189 00-1 through Figure 196
0198 00-1 through 0199 00-2	0198 00-1 through 0199 00-2
0200 00-1 through 0201 00-2	0200 00-1 through 0201 00-2
0202 00-1 through 0205 00-2	0202 00-1 through 0205 00-2
Figure 206 through 0208 00-2	Figure 206 through 0208 00-2
0209 00-1 through Figure 212	0209 00-1 through Figure 212
0216 00-1 through Figure 218	0216 00-1 through Figure 218
0220 00-1 and Figure 220	0220 00-1 and Figure 220
0222 00-1 through 0224 00-2	0222 00-1 through 0224 00-2
0225 00-1 through Figure 226	0225 00-1 through Figure 226
0229 00-1 and 0229 00-2	0229 00-1 and 0229 00-2
0230 00-1 through 0234 00-2	0230 00-1 through 0234 00-2
0236 00-1 through Figure 239	0236 00-1 through Figure 239
0245 00-1 and Figure 245	0245 00-1 and Figure 245
0250 00-1 through 0251 00-2	0250 00-1 through 0251-00 2
0252 00-1 through 0253 00-2	0252 00-1 through 0253 08-2
0254 00-1 and 0254 00-2	0254 00-1 and 0254 00-2
0256 00-1 and Figure 256	0256 00-1 and Figure 256
0261 00-1 through 0263 00-2	0261 00-1 through 0263 00-2
0264 00-1 and 0264 00-2	0264 00-1 and 0264 00-2
None	Figure 266A through 0267 03-2
0268 00-1 and Figure 268	0268 000-1 and Figure 268
0270 00-1 and Figure 270	0270 00-1 through Figure 270
0273 00-1 through	0273 00-1 through

3. File this change sheet in front of the publication for reference purposes.

Remove pages	Insert pages
Figure 287	Figure 287
0290 00-1 through 0291 00-2	0290 00-1 through 0291 00-2
0301 00-1 through 0302 00-2	0301 00-1 through 0302 00-2
0304 00-1 and 0304 00-2	0304 00-1 and 0304 00-2
0306 00-1 through 0306 00-52	0306 00-1 through 0306 00-62
0307 00-1 through 0307 00-112	0307 00-1 through 0307 00-119

3. File this change sheet in front of the publication for reference purposes.

By Order of the Secretary of the Army:

PETER J. SCHOOMAKER
General, United States Army
Chief of Staff

Official:

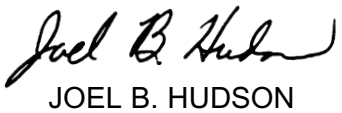

JOEL B. HUDSON
Administrative Assistant to the
Secretary of the Army
0126703

By Order of the Secretary of the Air Force:

RONALD R. FOGLEMAN
General, United States Air Force
Chief of Staff

Official:

HENRY VICCELLIO, JR.
General, United States Air Force
Commander, Air Force Materiel Command

Distribution:

To be distributed in accordance with the initial distribution number (IDN) 381022, requirements for TM 9-2320-387-24P.

LIST OF EFFECTIVE PAGES/WORK PACKAGES

The date of issue for original pages/work pages for this TM is:

Original . . . .0 . . . . . .31 March 2002
Change . . . . .1 . . . . . .30 July 2004
Change . . . . .2 . . . . . .31 May 2006
Change . . . . .3 . . . .28 February 2007
Change . . . . .4 . . . . . .3 March 2008
Change . . . . .5 . . . . . .31 August 2009

TOTAL NUMBER OF PAGES FOR FRONT AND REAR MATTER IS 28 AND
TOTAL NUMBER OF WORK PACKAGES IS 502 CONSISTING OF THE FOLLOWING:

Page/WP . . . . . .*Change No.	Page/WP . . . . . .*Change No.	Page/WP . . . . . .*Change No.
A-D 5	0025 00-2–Figure 25 0	Figure 45A Added 1
E Added 5	0026 00-1–0026 00-2 2	0046 01-1 2
F Blank Added 5	Figure 26–0027 00-1 0	Figure 46 0
i–xiv 5	Figure 27–0028 00-1 1	0047 00-1 0
xv–xvi Added 5	Figure 28 0	Figure 47 0
0001 00-1 5	0029 00-1–0029 00-2 1	0048 00-1 1
0001 00-2–0001-04 4	Figure 29–0031 00-1 2	Figure 48 0
0001 00-5–0001-06 5	Figure 31 0	0049 00-1 1
0003 00-1 2	0032 00-1 1	Figure 49 0
Figure 3–0005 00-1 1	Figure 32–Figure 33 0	0050 00-1 1
Figure 5–Figure 7 0	0034 00-1 1	Figure 50 0
0008 00-1–0010 00-1 1	Figure 34–0035 00-1 0	0051 00-1–0051 00-3 2
Figure 10 0	Figure 35–0037 00-1 5	Figure 51–0052 00-1 2
0011 00-1 2	Figure 37–0038 00-1 1	0052 01-1–0052 01-2 5
Figure 11 0	Figure 38–0039 00-1	Figure 52 0
0012 00-1 2	Figure 38A–0039 01-2	0053 00-1 2
Figure 12–0013 00-2 5	Added 5	Figure 53 0
Figure 12A–0013 01-2	Figure 39–0040 00-1 5	0054 00-1 2
Added 5	Figure 39A–0040 01-1	Figure 54–0055 00-1 2
Figure 13–Figure 14 0	Added 5	Figure 55 0
0015 00-1 2	Figure 40–0041 00-1 5	0056 00-1–0057 00-1 2
Figure 15 0	Figure 40A–0041 01-01	Figure 57 0
0016 00-1 1	Added 5	0058 00-1 2
Figure 16-0017 00-1 0	Figure 41 0	Figure 58 0
Figure 17-0018 00-1 1	0042 00-1 2	0059 00-1 2
Figure 18 0	Figure 42 1	Figure 59 0
0019 00-1 1	Figure 42A–Figure 42B	0060 00-1–Figure 60 0
Figure 19 0	Added 1	0061 00-1 2
0020 00-1–Figure 20 1	0043 02-1 2	Figure 61 0
0021 00-1 2	Figure 43 5	0062 00-1 2
Figure 21–0022 00-1 1	0044 00-1 1	Figure 62 0
Figure 22 0	Figure 44 5	0063 00-1–0065 00-1 1
0023 00-1 1	Figure 44A–0045 01-2	Figure 65–0066 00-1 5
Figure 23–Figure 24 0	Added 5	Figure 66–0067 00-1 1
0025 00-1 2	Figure 45-0046 00-1 1	Figure 67 0

*Zero in this column indicates original page.

LIST OF EFFECTIVE PAGES/WORK PACKAGES (Cont'd)

Page/WP .....*Change No.

Figure 68–0070 00-1 0
Figure 70–0071 00-1 1
Figure 70A–0071 01-1 5
Figure 71 0
0072 00-1 1
Figure 72 0
0073 00-1 1
Figure 73–0074 00-1 0
Figure 74–0075 00-1 1
Figure 75–0076 00-1 2
Figure 76–Figure 78 0
0079 00-1 1
Figure 79 0
0080 00-1 1
Figure 80–Figure 81 0
0082 00-1 1
Figure 82 0
0083 00-1 2
Figure 83–0084 00-1 0
0085 00-1 5
Figure 85 0
0086 00-1 1
Figure 86 0
0087 00-1 2
Figure 87 1
0088 00-1–0089 00-2 2
Figure 89–Figure 91 0
0092 00-1 1
Figure 92 0
0093 00-1 1
Figure 93 0
0094 00-1 1
Figure 94 0
0095 00-1 1
Figure 95 0
0096 00-1–0097 00-1 1
Figure 97 0
0098 00-1 1
Figure 98–0099 00-2 0
Figure 99–0100 00-1 5
Figure 99A–0100 01-1
Added 5
Figure 100–0101 00-1 5
Figure 100A–0101 01-2
Added 5
Figure 101–0102 00-1 5
Figure 101A–0102 01-1
Added 5

Page/WP .....*Change No.

Figure 102–0104 00-2 5
Figure 103A–0104 01-1
Added 5
Figure 104–0105 00-1 5
Figure 105 0
0106 00-1 1
Figure 106 0
0107 00-1 2
Figure 107–Figure 108 0
0109 00-1 1
Figure 109 0
0110 00-1 1
Figure 110 0
0111 00-1 1
Figure 111–Figure 112 0
0113 00-1 1
Figure 113–0114 00-1 5
Figure 113A–0114 01-1
Added 5
Figure 114–115 00-2 5
Figure 115 0
0116 00-1 1
Figure 116–0117 00-1 5
Figure 116A–0117 01-1 5
0118 00-1 1
0118 00-2–0118 00-3 0
Figure 117 1
0118 00-1–0118 06-1 5
Figure 117G–0118 08-1
Added 5
Figure 118 0
0119 00-1 1
Figure 119–0120 00-1 5
Figure 119A–0120 01-1
Added 5
Figure 120–0124 00-1 5
Figure 123A–0124 01-2
Added 5
Figure 124–0125 00-1 5
Figure 124A–0125 01-1
Added 5
Figure 125–0126 00-1 5
Figure 125A–0126 02-1
Added 5
Figure 126–0127 00-1 5
Figure 126A–0127 01-2
Added 5
Figure 127–0128 00-1 5

Page/WP .....*Change No.

Figure 127A–0128 01-1
Added 5
Figure 128–0129 00-1 5
Figure 128A–0129 01-1
Added 5
Figure 129–0130 01-1 5
Figure 130 0
0131 00-1 2
Figure 131–0132 00-1 5
Figure 131A–0132 01-2
Added 5
Figure 132–0133 00-1 5
Figure 132A–0133 01-1
Added 5
Figure 133–0136 00-1 5
Figure 135A–0136 01-1
Added 5
Figure 136–0138 00-1 5
Figure 138–0139 00-1 0
Figure 138A–0139 02-1 5
Figure 138C–0139 03-1
Added 5
Figure 139 1
0140 00-1 2
0141 00-1 2
Figure 140 1
Figure 141–0142 00-1 5
Figure 141A–0142 01-2
Added 5
Figure 142–0143 00-1 5
Figure 142A–0143 01-2
Added 5
Figure 143–0144 00-1 5
Figure 143A–0144 01-2
Added 5
Figure 144–0145 00-1 5
Figure 144A–0145 01-1
Added 5
Figure 145 0
0146 00-1 0
0147 00-1 1
Figure 147 0
0148 00-1 1
Figure 148 0
0149 00-1 1
Figure 149–0150 00-1 5
Figure 150 0
0151 00-1 1

LIST OF EFFECTIVE PAGES/WORK PACKAGES (Cont'd)

Page/WP .....*Change No.

Figure 150A–0151 01-2
Added 5
0151 00-1 1
0152 00-1 2
Figure 151 0
0152 00-1 1
Figure 152 0
0153–0154 00-1 5
Figure 154 0
0155 00-1 2
Figure 155–0156 00-1 5
Figure 155A–0156 01-1
Added 5
Figure 156–0157 00-1 5
Figure 157–0158 00-1 2
Figure 158 0
0159 00-1 2
0159 00-2 1
Figure 159–0160 00-1 0
Figure 160 1
0161 00-1–0163 00-1 2
Figure 163–0164 00-1 5
Figure 163A–0164 01-2
Added 5
Figure 164–0165 00-1 5
Figure 164A–0165 01-1
Added 5
Figure 165–0166 00-1 2
Figure 166 0
0167 00-1 2
Figure 166A–0167 01-3
Added 2
Figure 166B–0167 02-2
Added 5
Figure 167 2
0168 00-1–0168 00-2 2
Figure 167A–0168 01-2
Added 2
Figure 167B–0168 05-2
Added 2
Figure 167F–0168 06-2 5
Figure 167G–0168 18-1
Added 4
Figure 167S–0168 22-1
Added 5
Figure 168–0169 00-2 1
Figure 169–0170 00-2 2
Figure 169A–0170 09-1
Added 4

Page/WP .....*Change No.

Figure 169J–0170 10-3
Added 5
Figure 170–0171 00-2 2 2
Figure 170A–0171 01-2
Added 5
Figure 171–0172 00-1 2
Figure 172–0173 00-1 0
Figure 173–0178 00-1 1
Figure 178–Figure 179 0
0180 00-1 1
Figure 180 0
0181 00-1 1
Figure 181 0
0182 00-1 2
Figure 182 0
0183 00-1–0184 00-2 1
Figure 184 0
0185 00-1 1
Figure 185–0186 00-1 2
Figure 186 0
0187 00-1 1
Figure 187–Figure 188 0
0189 00-1 1
Figure 188A–0189 15-1
Added 4
Figure 189–0190 00-1 1
Figure 189A–0190 04-1 5
Figure 189E–Figure 189H 4
0190 08-1–0190 12-1 5
0190 13-1 5
0190 14-1 Added 5
Figure 189O–0190 15-1 4
0190 16-1 5
0190 16-2 4
Figure 189Q–0190 17-1
Added 4
Figure 190 0
0191 00-1 1
Figure 191 0
0192 00-1–Figure 194 1
0195 00-1 2
Figure 195–0196 00-1 2
Figure 195A–0196 11-1
Added 4
0196 04-1 5
Figure 195E 4
0196 05-1 5
Figure 195F 4
0196 06-1 5

Page/WP .....*Change No.

Figure 195G 4
0196 07-1–0196 08-5 .....
Figure 196–0197 00-2 2
Figure 196A–0197 07-3
Added 2
Figure 197–0198 00-1 2
Figure 197A–0198 01-2
Added 2
Figure 198 0
0199 00-1 2
0199 00-2 1
Figure 198A–0199 01-1
Added 2
Figure 199–0200 00-1 2
Figure 199A–0200 01-1
Added 2
Figure 200–0201 00-2 2
Figure 200A–0201 08-2
Added 5
Figure 201A–0202 02-2
Added 2
Figure 201C–0202 03-2
Added 4
Figure 201D–0202 16-1
Added 5
Figure 202 0
0203 00-1 2
Figure 202A–0203 02-2 4
Added 2
Figure 202C–0203 05-1
Added 5
Figure 203–0204 00-1 1
Figure 204 2
Figure 204A–0205 02-2
Added 5
0205 00-1 1
0205 00-2 0
Figure 205–0206 00-2 2
Figure 205A–0206 01-2
Added 2
Figure 205B–0206 03-1
Added 5
Figure 206 1
0207 00-1–0207 00-2 2
Figure 207–0208 00-2 1
Figure 207A–0208 01-2
Added 2
Figure 207B–0208 02-3
Added 5

LIST OF EFFECTIVE PAGES/WORK PACKAGES (Cont'd)

Page/WP .....*Change No.

Figure 208–0209 00-1 2
Figure 208A–0209 01-2
Added 2
Figure 209 1
0210 00-1 2
Figure 209A–0210 01-1
Added 2
Figure 209B–0210 03-1
Added 5
Figure 210–0211 00-1 1
Figure 210A–0211 02-1
Added 2
Figure 211 0
0212 00-1 1
Figure 212–0213 00-1 0
0213 00-2 2
0213 00-3–Figure 213 0
0214 00-1–0214 00-2 2
Figure 213A Added 2
0214 01-1–0214 01-2 5
Figure 214 0
0215 00-1 2
Figure 215 0
0216 00-1 2
Figure 216 0
0217 00-1 2
Figure 217 1
0218 00-1 2
Figure 217A Added 2
0218 01-1 Added 5
Figure 217B Added 2
0218 02-1 5
Figure 218–Figure 219 0
0220 00-1 1
Figure 220 0
Figure 220A–0221 01-1
Added 4
0221 00-1 2
Figure 221 0
0221 01–0221 02 5
0222 00-1 1
Figure 221A–0222 01-1
Added 2
Figure 221B–Figure 221C .....
0222 03-1 5
Figure 222–0224 00-2 0
Figure 223A–0224 01-2
Added 2

Page/WP .....*Change No.

Figure 224 0
0225 00-1 1
Figure 225–0226 00-1 0
Figure 225A 1
0226 01-1 2
Figure 225B–0226 10-1
Added 1
Figure 225K–0226 11-1
Added 5
Figure 226–0228 00-2 2
Figure 226A–0227 01-1
Added 5
Figure 227A–0228 04-4
Added 2
Figure 228 0
Figure 228A Added 2
0229 00-1–0229 00-2 1
0229 01-1–0229 01-3
Added 5
Figure 229–0230 00-1 2
Figure 230–0231 00-1 1
Figure 230A–0231 01-2
Added 2
Figure 230B–0231 02-1
Added 5
Figure 231 0
0232 00-1–0233 00-2 2
Figure 233–0234 00-2 1
Figure 234 0
0235 00-1–0236 00-1 2
Figure 235A–0236 01-1
Added 2
0236 01-1 5
Figure 236 0
0237 00-1 2
Figure 237 0
0238 00-1 2
0238 00-2 1
Figure 237A–0238 01-1
Added 2
Figure 238 2
Figure 238A–0239 01-1
Added 5
0239 00-1–0239 00-2 .....
0240 00-1 5
Figure 240–Figure 243 0
0244 00-1 2
Figure 244 0

Page/WP .....*Change No.

0245 00-1 2
Figure 245–Figure 247 0
0248 00-1 2
Figure 248 0
0249 00-1–0249 00-2 2
Figure 249 0
0250 00-1 1
0250 00-2 0
0250 00-3 1
Figure 249A–0250 01-2 2
Figure 249B–0250 05-2 1
Figure 249F–0250 10-2
Added 2
Figure 250–0252 00-2 2
Figure 252 1
0253 00-1–0253 00-2 2
Figure 252A–0253 08-2
Added 1
Figure 253–0254 00-1 0
0284 00-2 1
Figure 254–Figure 255 0
0256 00-1 2
Figure 256 0
0257 00-1 2
Figure 257 0
0258 00-1 2
Figure 258 0
0259 00-1 2
Figure 259–Figure 260 0
0261 00-1 1
0261 00-2 0
Figure 261–0262 00-2 1
Figure 262 0
0263 00-1–0263 00-2 1
Figure 263 0
0264 00-1 1
0264 00-2 0
Figure 264 0
0265 00-1 2
0265 00-2 0
Figure 265–0266 00-1 2
Figure 265A–0266 12-7
Added 4
Figure 266 0
0267 00-1–0267 00-2 2
Figure 266A–0267 03-2 1
Figure 266D–0267 05-1
Added 2

LIST OF EFFECTIVE PAGES/WORK PACKAGES (Cont'd)

Page/WP .....*Change No.

Figure 266F–267 16-3
Added 4
Figure 267–0268 00-1 5
Figure 267A–0268 01-1 5
Figure 268–0270 00-1 0
Figure 269A–0270 01-1
Added 1
Figure 270–0273 00-1 0
Figure 273–0274 00-2 2
Figure 273A Added 1
0274 01-1 2
Figure 274–0275 00-1 2
Figure 274A Added 2
0275 01-1–0275 02-15 .....
Figure 274B–0275 02-1 5
0275 03-1 5
Figure 274C 2
0275 03-1 5
Figure 274D 2
0275 04-1 5
Figure 274E 2
0275 05-1 5
Figure 274F 2
0275 06-1 5
Figure 274G 2
0275 07-1 5
Figure 274H 2
0275 08-1 5
Figure 275–0276 00-1 2
Figure 276–0277 00-1
Deleted 1
Figure 276A–0277 02-1 2
Figure 276C–0277 03-1 1
Figure 276D Added 2
0277 04-1 5
Figure 276E 2
0277 05-1 5
Figure 276F 2
0277 06-1 5
Figure 276G 4
0277 07-1 5
Figure 277–0279 00-1
Deleted 1
Figure 279 0
0280 00-1 1
Figure 279A–0280 01-1 2
Figure 280–0281 00-1
Deleted 1

Page/WP .....*Change No.

Figure 281–0282 00-1 0
Figure 281A Added 2
0282 01-1 5
Figure 281B 2
0282 02-1 5
Figure 281C 2
0282 03-1 5
Figure 281D 2
0282 04-1 5
Figure 282–0283 00-1 2
Figure 282A–0283 01-1
Added 1
Figure 283 0
0284 00-1 1
Figure 284 0
0285 00-1 1
Figure 285–0286 00-1 0
Figure 286 1
0287 00-1 2
Figure 287–0288 00-1 0
Figure 287A Added 2
0288 01-1 5
Figure 287B 2
0288 02-1 5
Figure 287C 2
0288 03-1 5
Figure 288 0
0289 00-1 0
Figure 288A 2
0289 01-1 5
0290 00-1–0290 00-11 5
0290 0012–0290 0016
Added 5
0291 00-1-0291 00-2 5
0291 00-3 Added 5
0291 00-3 5
Figure 289–Figure 298 0
0301 00-1 1
Figure 299 0
0302 00-1 1
0302 00-2–Figure 301 0
0304 00-1–0304 00-2 2
Figure 302–0305 00-1 0
0306 00-1–0307 00-241 5

*ARMY TM 9-2320-387-24P
AIR FORCE TO 36A12-1A-3064
MARINE CORPS TM 11033-INP

TECHNICAL MANUAL
NO. 9-2320-387-24P
NO. 11033-INP

TECHNICAL ORDER
NO. 36A12-1A-3064

HEADQUARTERS
DEPARTMENTS OF THE ARMY,
THE AIR FORCE, AND MARINE CORPS
WASHINGTON, D.C. *31 March 2002*

TECHNICAL MANUAL

UNIT, DIRECT SUPPORT, AND GENERAL SUPPORT MAINTENANCE REPAIR PARTS AND SPECIAL TOOLS LIST FOR

TRUCK, UTILITY: S250 SHELTER CARRIER, 4X4, M1113 (2320-01-412-0143) (EIC: B6B)
TRUCK, UTILITY: UP-ARMORED CARRIER, 4X4, M1114 (2320-01-413-3739) (EIC: B6C)
TRUCK, UTILITY: EXPANDED CAPACITY, ARMAMENT CARRIER, M1151 (2320-01-518-7330) (EIC: BA5)
TRUCK, UTILITY: EXPANDED CAPACITY ARMAMENT CARRIER, IAP/ARMOR READY, M1151A1 (2320-01-540-2038) (EIC: BEG)
TRUCK, UTILITY: EXPANDED CAPACITY, ENHANCED, M1152 (2320-01-518-7332) (EIC: BA6)
TRUCK, UTILITY: EXPANDED CAPACITY, ENHANCED, IAP/ARMOR READY, M1152A1 (2320-01-540-2007) (EIC: BEH)
TRUCK, UTILITY: COMMAND AND CONTROL/GENERAL PURPOSE VEHICLE, M1165 (2320-01-540-1993) (EIC: BEK)
TRUCK, UTILITY: COMMAND AND CONTROL/GENERAL PURPOSE VEHICLE, IAP/ARMOR READY, M1165A1 (2320-01-540-2017) (EIC: BEJ)
TRUCK, UTILITY: EXPANDED CAPACITY, TOW ITAS CARRIER, M1167 (2320-01-544-9638)

Current as of 27 Nov 01

REPORTING ERRORS AND RECOMMENDING IMPROVEMENTS

(Army) You can help improve this publication. If you find any errors, or if you would like to recommend any improvements to the procedures in this publication, please let us know. The preferred method is to submit your DA Form 2028 (Recommended Changes to Publications and Blank Forms) through the Internet, on the Army Electronic Product Support (AEPS) website. The Internet address is https://aeps.ria.army.mil. The DA Form 2028 is located under the Public Applications section in the AEPS Public Home Page. Fill out the form and click on SUBMIT. Using this form on the AEPS will enable us to respond quicker to your comments and better manage the DA Form 2028 program. You may also mail, e-mail, or fax your comments or DA Form 2028 directly to the U.S. Army TACOM Life Cycle Management Command. The postal mail address is U.S. Army TACOM Life Cycle Management Command, ATTN: AMSTA-LCL-MPP/TECH PUBS, 1 Rock Island Arsenal, Rock Island, IL 61299-7630. The e-mail address is tacomlcmc.daform2028@us.army.mil. The fax number is DSN 793-0726 or Commercial (309) 782-0726. (Marine Corps) Submit notice of discrepancies or suggest changes on a NAVMC 10772. Users without CAC/PKI certificates may submit the NAVMC via the Internet using website http://www.ala.usmc.mil/navmc/part1.htm. You can then fill in and submit the automated NAVMC 10772 Form. NAVMC forms may also be submitted by electronic mail to mbmatcommarlogbases@logcom.usmc.mil mailto:mbmatcommarlogbases@logcom.usmc.mil, or by mailing a paper copy of the NAVMC 10772 in an envelope addressed to Commander, Marine Corps Systems Command, Attn: Assistant Commander Acquisition and Logistics (LOG/TP), 814 Radford Blvd., Room 316E, Albany, Georgia 31704-0343. Problems or questions regarding the NAVMC 10772 program should be reported by calling DSN 567-5017 or DSN 567-6439. In addition to electronic submittal of the NAVMC form via the above web links, forward an information copy (cc:) or mail a paper copy to the Logistics Management Specialist at the following address: Logistics Management Specialist, Code PMM151, 814 Radford Blvd., STE 310W, Albany, Georgia 31704-0343.

DISTRIBUTION STATEMENT A: Approved for public release; distribution is unlimited.

* This manual supersedes TM 9-2320-387-24P, dated 1 September 1998.

TABLE OF CONTENTS

		WP Sequence No.
	INTRODUCTION	0001 00
GROUP 01	ENGINE	
	0100 Engine and container assembly	0002 00
	0100 Engine mounting brackets	0003 00
	0101 Engine block, cylinder head, and drain tube	0004 00
	0102 Crankshaft, damper, bearings, and pulley	0005 00
	0103 Flywheel	0006 00
	0104 Piston assembly, rod assembly, and ring set	0007 00
	0105 Valves, guides, and rocker arm assemblies	0008 00
	0105 Camshaft, timing chain, and related parts	0009 00
	0105 Crankcase cover assembly and rocker cover	0010 00
	0106 Engine oil dipstick and tube assembly	0011 00
	0106 Engine oil pan, pump, and filler tube	0012 00
	0106 Engine, power steering, transmission oil cooler lines, and related parts (serial number 299999 and below)	0013 00
	0106 Engine, power steering, transmission oil cooler, engine oil cooler lines, and related parts (serial number 300000 and above)	0013 01
	0106 Oil filter, adapter, and oil line fittings	0014 00
	0106 Crankcase depression regulator valve and mounting hardware	0015 00
	0108 Air intake manifolds	0016 00
	0108 Exhaust manifolds	0017 00
	0108 Exhaust manifold heat shields	0018 00
GROUP 03	FUEL SYSTEM	
	0301 Fuel injector nozzle and gasket	0019 00
	0302 Fuel pump and mounting hardware	0020 00
	0302 Fuel injection pump and fuel filter lines	0021 00
	0302 Fuel injection supply and return lines	0022 00
	0302 Fuel injection pump cover assembly, governor linkage, and related parts	0023 00
	0302 Fuel injection pump throttle shaft, regulator, transfer pump, and related parts	0024 00
	0302 Fuel injection pump housing, head and rotor, drive shaft, and related parts	0025 00
	0304 Air cleaner, air horn, and related parts	0026 00
	0305 Turbocharger assembly	0027 00
	0306 Fuel tank supply and return lines	0028 00
	0306 Fuel tank assembly and mounting straps	0029 00
	0306 Fuel filler pipe assembly and vent lines	0030 00
	0306 Fuel tank vent line, filter, and mounting hardware	0031 00
	0309 Fuel filter assembly/water separator and mounting hardware	0032 00
	0311 Glow plug	0033 00
	0312 Accelerator controls and hand throttle	0034 00
	0312 Accelerator cable bracket and idle spring	0035 00
GROUP 04	EXHAUST SYSTEM	
	0401 Muffler, exhaust pipes, and related parts	0036 00
GROUP 05	COOLING SYSTEM	
	0501 Radiator and mounting hardware (serial number 299999 and below)	0037 00
	0501 Surge tank and related parts	0038 00
	0502 Radiator shroud and related parts (serial number 299999 and below)	0039 00
	0502 Radiator, shroud, and related parts (serial number 300000 and above)	0039 01

TABLE OF CONTENTS (Cont'd)

		WP Sequence No.
	0503 Thermostat, water crossover, and attaching hardware (serial number 299999 and below)	0040 00
	0503 Thermostat, water crossover, and attaching hardware (serial number 300000 and above)	0040 01
	0503 Radiator hoses and related parts (serial number 299999 and below)	0041 00
	0503 Radiator hoses and related parts (serial number 300000 and above)	0041 01
	0504 Water pump and attaching hardware	0042 00
	0505 Tensioner, idler pulley, and mounting hardware (serial number 196900 and below)	0043 00
	0505 Idler pulley bracket, tensioner, and related parts (serial number 196901 and above)	0043 01
	0505 Idler pulleys and mounting hardware (serial number 196901 and above)	0043 02
	0505 Fan assembly and serpentine belt	0044 00
	0505 Fan drive (serial number 299999 and below)	0045 00
	0505 Geared fan drive (serial number 300000 and above)	0045 01
GROUP 06	ELECTRICAL SYSTEM	
	0601 200 AMP alternator (Niehoff) mounting hardware	0046 00
	0601 Alternator/power steering pump mounting bracket and related parts (serial number 196901 and above)	0046 01
	0601 200 AMP alternator (Niehoff) and related parts	0047 00
	0601 200 AMP alternator assembly	0048 00
	0601 Starter motor	0049 00
	0603 Starter motor cable assemblies and mounting hardware	0050 00
	0603 Starter motor assembly	0051 00
	0607 Instrument panel assembly and mounting hardware	0052 00
	0607 Instrument panel assembly and mounting hardware	0052 01
	0607 Instrument cluster assembly	0053 00
	0607 Circuit breakers	0054 00
	0608 Directional control unit, protective control box, and directional flasher	0055 00
	0608 Stoplight/torque converter clutch brake switch, time delay module, and high beam selector switch	0056 00
	0608 Transmission control module, circuit breaker, and relay	0057 00
	0609 Front composite light and mounting hardware	0058 00
	0609 Rear composite light and mounting hardware	0059 00
	0609 Headlight assembly	0060 00
	0609 Blackout lamp assembly	0061 00
	0609 Clearance marker light assembly	0062 00
	0610 Sending units	0063 00
	0610 STE/ICE Frequency, converter module, fan cut-off switch, throttle position sensor, and speed sensor	0064 00
	0610 Fuel pressure transducer, fuel level transmitter, parking brake, backup light switches, and transfer indicator switch	0065 00
	0611 Horn assembly and mounting hardware	0066 00
	0612 Batteries, cables, and related parts	0067 00
	0612 Buss bar and mounting hardware	0068 00
	0612 Battery mounting components and related parts	0069 00
	0612 Slave receptacle and cable assemblies	0070 00
	0612 200 AMP umbilical power cable	0071 00
	0612 Cab enclosures	0071 01
	0613 Engine wiring harness	0072 00
	0613 Engine wiring harness installation hardware	0073 00
	0613 STE/ICE wiring harness	0074 00
	0613 STE/ICE wiring harness mounting hardware	0075 00

TABLE OF CONTENTS (Cont'd)

		WP Sequence No.
	0613 Hood wiring harness	0076 00
	0613 Body wiring harness-partial view	0077 00
	0613 Body wiring harness-partial view	0078 00
	0613 Body wiring harness-partial view	0079 00
	0613 Body wiring harness installation hardware-partial view	0080 00
	0613 Body wiring harness installation hardware-partial view	0081 00
	0613 Body wiring harness installation hardware-partial view	0082 00
	0613 Transmission wiring harness	0083 00
GROUP 07	TRANSMISSION	
	0705 Transmission and transfer control assembly	0084 00
	0705 Transmission shift control and neutral start switch	0085 00
	0705 Transmission shift lever, shift bracket, and rod	0086 00
	0708 Torque converter	0087 00
	0710 Transmission mounting hardware, fluid dipstick, and tube assembly	0088 00
	0710 Transmission assembly	0089 00
	0710 Parking lock system	0090 00
	0710 Planetary gear carrier	0091 00
	0713 Direct clutch assembly	0092 00
	0713 Forward clutch	0093 00
	0713 Intermediate clutch and center support assembly	0094 00
	0713 Overrun, overdrive, and fourth clutch assembly	0095 00
	0714 Front servo, rear servo, and governor assembly	0096 00
	0714 Control valve and related parts	0097 00
	0714 Control valve, accumulator, and related parts	0098 00
	0721 Transmission oil pump	0099 00
	0721 Transmission vent lines and attaching hardware (serial number 299999 and below)	0100 00
	0721 Transmission vent lines and attaching hardware (serial number 300000 and above)	0100 01
	0721 Transmission/transfer cooling lines (serial number 299999 and below)	0101 00
	0721 Transmission oil cooler lines (serial number 300000 and above)	0101 01
GROUP 08	TRANSFER	
	0801 Transfer assembly (serial number 299999 and below)	0102 00
	0801 Transfer assembly (serial number 300000 and above)	0102 01
	0801 Transfer case assembly (front half) (serial number 299999 and below)	0103 00
	0801 Transfer case assembly (rear half) (serial number 299999 and below)	0104 00
	0801 Differential and transfer case cooler lines (serial number 300000 and above)	0104 01
	0801 Transfer oil cooler assembly (serial number 299999 and below)	0105 00
	0801 Transfer shift mechanisms	0106 00
	0803 Transfer shift control lever	0107 00
	0804 Transfer case vent line and related parts	0108 00
GROUP 09	PROPELLER SHAFTS	
	0900 Front propeller shaft assemblies	0109 00
	0900 Rear propeller shaft assemblies	0110 00
GROUP 10	FRONT AXLE	
	1000 Front halfshaft assembly, left and right side	0111 00
	1002 Front axle differential, mounting bracket, and hardware	0112 00
	1002 Front axle differential and geared hub vent lines	0113 00

TABLE OF CONTENTS (Cont'd)

		WP Sequence No.
	1004 Front knuckle and geared hub assembly (geared hub P/N 6009352) (serial number 299999 and below)	0114 00
	1004 Front knuckle and geared hub assembly (serial number 300000 and above)	0114 01
	1004 Front control arms, ball joints, and mounting hardware	0115 00
GROUP 11	REAR AXLE	
	1100 Rear halfshaft assembly, left and right side	0116 00
	1102 Rear axle differential, mounting brackets, and hardware (serial number 299999 and below)	0117 00
	1102 Rear differential assembly and related parts (serial number 300000 and above)	0117 01
	1102 Axle differential	0118 00
	1102 Rear differential oil cooler cover, lines, and related parts (serial number 192464 through 299999)	0118 01
	1102 Rear crossmember, rear differential oil cooler lines (serial number 299999 and below)	0118 02
	1102 Rear crossmember to frame rail rear differential oil cooler flexible brake lines (serial number 299999 and below)	0118 03
	1102 Rear frame rail rear differential oil cooler lines and mounting hardware (serial number 299999 and below)	0118 04
	1102 Front crossmember rear differential oil cooler lines, hose, and mounting hardware (serial number 299999 and below)	0118 05
	1102 Front-rear differential oil cooler hoses and manifold valve (serial number 299999 and below)	0118 06
	1102 Rear differential cooler hoses and related parts (serial number 300000 and above)	0118 07
	1102 Front-rear differential cooler hoses and related parts (serial number 300000 and above)	0118 08
	1102 Rear axle differential and geared hub vent lines	0119 00
	1104 Rear knuckle and geared hub assembly (geared hub P/N 6009352) (serial number 299999 and below)	0120 00
	1104 Rear knuckle and geared hub assembly (serial number 300000 and above)	0120 01
	1104 Rear control arms, ball joints, and mounting hardware	0121 00
GROUP 12	BRAKES	
	1201 Parking brake hand lever (serial number 299999 and below)	0122 00
	1201 Parking brake rod (serial number 299999 and below)	0123 00
	1201 Parking brake cables and mounting hardware (serial number 299999 and below)	0124 00
	1201 Parking brake cables, rod, and hand lever (serial number 300000 and above)	0124 01
	1201 Rear parking brake and rear caliper assembly (serial number 299999 and below)	0125 00
	1201 Parking brake assembly (serial number 300000 and above)	0125 01
	1202 Front service brake caliper assembly and rotor (serial number 299999 and below)	0126 00
	1202 Front service brake caliper assembly and rotor (serial number 300000 and above)	0126 01
	1202 Rear service brake caliper assembly and rotor (serial number 300000 and above)	0126 02
	1204 Front service brake lines and proportioning valve (serial number 299999 and below)	0127 00
	1204 Front service brake lines, fittings, and proportioning valve (serial number 300000 and above)	0127 01

TABLE OF CONTENTS (Cont'd)

		WP Sequence No.
	1204 Rear brake lines and fittings (serial number 299999 and below)	0128 00
	1204 Rear brake lines and fittings (serial number 300000 and above)	0128 01
	1204 Master cylinder assembly (serial number 299999 and below)	0129 00
	1204 Hydro-boost master cylinder (serial number 300000 and above)	0129 01
	1205 Hydro-boost	0130 00
	1206 Service brake pedal assembly	0131 00
GROUP 13	WHEELS	
	1311 Wheel and runflat assembly, MT tire (serial number 246889 and below)	0132 00
	1311 Wheel and runflat assembly, load range D and E (24 bolt wheel) (serial number 246890 and above)	0132 01
	1313 Tires, MT (serial number 246889 and below)	0133 00
	1313 Tires, MTR load range D and E (serial number 246890 and above)	0133 01
GROUP 14	STEERING	
	1401 Steering column, wheel, and intermediate shaft	0134 00
	1401 Steering linkage	0135 00
	1407 Power steering gear and mounting hardware (serial number 246889 and below)	0136 00
	1407 Power steering gear and mounting hardware (serial number 246890 and above)	0136 01
	1407 Power steering gear assembly (steering gear P/N 12460232) (serial number 246889 and below)	0137 00
	1410 Power steering pump, pulley, and mounting hardware (serial number 196900 and below)	0138 00
	1410 Power steering pump assembly	0139 00
	1410 Remote power steering reservoir and hoses (serial number 196901 and above)	0139 01
	1410 Power steering pump, pulley, and related parts (serial number 196901 and above)	0139 02
	1410 Power steering hoses (serial number 246890 and above)	0139 03
	1411 Power steering and hydro-boost hydraulic lines and fittings (serial number 196900 and below)	0140 00
	1411 Power steering oil cooler, hydro-boost, and fan clutch hydraulic lines and fittings	0141 00
GROUP 15	FRAME AND TOWING ATTACHMENTS	
	1501 Frame assembly, body mount brackets, and transmission crossmembers (serial number 299999 and below)	0142 00
	1501 Frame assembly, body mount brackets, and transmission crossmembers (serial number 300000 and above)	0142 01
	1501 Air lift brackets, front upper control arm brackets, front spring seats, crossbrace, and mounting hardware (serial number 246889 and below)	0143 00
	1501 Air lift brackets, front upper control arm brackets, front spring seats, crossbrace, and mounting hardware (serial number 246890 and above)	0143 01
	1501 Front suspension crossmembers, related parts, and mounting hardware (serial number 299999 and below)	0144 00
	1501 Front suspension crossmembers, related parts, and mounting hardware (serial number 300000 and above)	0144 01
	1501 Rear suspension crossmembers, related parts, and mounting hardware (serial number 299999 and below)	0145 00
	1501 Rear suspension crossmembers, related parts, and mounting hardware (serial number 300000 and above)	0145 01
	1501 Rear upper control arm brackets, spring seats, related parts, and mounting hardware	0146 00

TABLE OF CONTENTS (Cont'd)

		WP Sequence No.
	1501 Brake protection guard (front)	0147 00
	1501 Brake protection guard (rear)	0148 00
	1501 Front bumper and lifting shackle	0149 00
	1501 Rear bumper and lifting shackle	0150 00
	1503 Towing pintle assembly	0151 00
	1504 Drop down spare tire carrier accessory kit	0151 01
GROUP 16	SPRINGS AND SHOCK ABSORBERS	
	1601 Springs, front and rear	0152 00
	1604 Shock absorbers, front and rear	0153 00
	1605 Stabilizer bar and connecting links	0154 00
	1605 Rear radius rods	0155 00
GROUP 18	BODY AND HOOD	
	1801 Body mounting components (serial number 299999 and below)	0156 00
	1801 Body mounting components (serial number 300000 and above)	0156 01
	1801 Body assembly components, left hand (serial number 299999 and below)	0157 00
	1801 Body assembly and related parts	0158 00
	1801 Body assembly components, right hand	0159 00
	1801 Body insulation and cowl assemblies	0160 00
	1801 Hood assembly and mounting hardware	0161 00
	1801 Hood assembly grille and related parts	0162 00
	1801 Grille frame mounting assembly	0163 00
	1801 Left hand splash shield, radiator side armor, and hood prop rod (serial number 299999 and below)	0164 00
	1801 Left hand splash shield, radiator side armor, and hood prop rod (serial number 300000 and above)	0164 01
	1801 Right hand splash shield (serial number 246889 and below)	0165 00
	1801 Right hand splash shield (serial number 246890 and above)	0165 01
	1801 Engine access cover assembly, A-pillar insulation, and steering wheel lock	0166 00
	1801 Rear fixed doors, access door panel, and mounting hardware	0167 00
	1801 Crew door assembly, rear ballistic	0167 01
	1801 Rear fixed doors and mounting hardware (M1152A1)	0167 02
	1801 Door assembly and overlay kit, front	0168 00
	1801 Door assembly and overlay kit, rear	0168 01
	1801 Crew door assembly, front ballistic	0168 02
	1801 Ballistic door assembly mounting	0168 03
	1801 Ballistic door assembly and insulation	0168 04
	1801 Ballistic door assembly combat lock, handle, and latch	0168 05
	1801 Frag 5 door and window assembly (M1151A1, M1152A1, M1165A1,M1167)	0168 06
	1801 Frag 5 door, hinge, handle, and D-ring	0168 07
	1801 Frag 5 door combat latch, safety strap, and related hardware	0168 08
	1801 Frag 5 front and rear door combat lock lever assembly	0168 09
	1801 Frag 5 door insulation	0168 10
	1801 Frag 5 window assembly	0168 11
	1801 Frag 5 kit, front door assemblies (M1114)	0168 12
	1801 Frag 5 kit, front door covers and related hardware (M1114)	0168 13
	1801 Frag 5 kit, front door insulation and cover (M1114)	0168 14
	1801 Frag 5 kit, front door hinges, safety strap, and related hardware (M1114)	0168 15
	1801 Frag 5 kit, front door slam latches and related hardware (M1114)	0168 16
	1801 Frag 5 kit, B-pillar assembly (M1114)	0168 17

TABLE OF CONTENTS (Cont'd)

		WP Sequence No.
1801	Frag 5 kit, Front door linkages (M1114)	0168 18
1801	Front and rear standard threat door assembly and seal	0168 19
1801	Front standard threat door linkages and related parts	0168 20
1801	Standard threat door hinges and mounting hardware	0168 21
1801	Front and rear standard threat door insulation	0168 22
1801	Latching mechanism, locking pawl, and related parts	0169 00
1801	Door handle and related parts	0170 00
1801	Frag 5 kit, rear door assembly (M1114)	0170 01
1801	Frag 5 kit, rear door insulation and cover	0170 02
1801	Frag 5 kit, rear door covers and related hardware (M1114)	0170 03
1801	Frag 5 kit, rear door hinges, safety strap, and related hardware (M1114)	0170 04
1801	Frag 5 kit, window assembly (M1114)	0170 05
1801	Frag 5 kit, rear door slam latches and related hardware (M1114)	0170 06
1801	Frag 5 kit, door latch ramps and mounting hardware (M1114)	0170 07
1801	Frag 5 kit, front and rear door guides (M1114)	0170 08
1801	Frag 5 kit, rear door linkages, armor skirts, and related hardware (M1114)	0170 09
1801	Rear standard threat door linkages	0170 10
1801	Door subassembly, window, and related parts	0171 00
1801	Front and rear standard threat door window assembly	0171 01
1801	Fuel door, fuel armor latch, door latch, and mounting hardware	0172 00
1801	C-Pillar lower armor and mounting hardware	0173 00
1801	Driver side footwell armor and related parts	0174 00
1801	Driver side inner armor and mounting hardware	0175 00
1801	Passenger side inner kick panel and mounting hardware	0176 00
1801	Passenger side footwell armor and related parts	0177 00
1801	Passenger side upper cowl assembly and mounting hardware	0178 00
1801	Roof shims, footman loops, and mounting hardware	0179 00
1801	B-Pillar armor and mounting hardware	0180 00
1801	C-Pillar armor and related parts	0181 00
1801	Rear partition and related parts	0182 00
1801	Rear partition assembly	0183 00
1801	Rear partition mounting hardware	0184 00
1801	Firewall armor and mounting hardware	0185 00
1801	Firewall armor, side mirror bracket, and related parts	0186 00
1801	Windshield deflector subassemblies and related parts	0187 00
1801	Windshield support bracket and mounting hardware	0188 00
1801	Passenger side rocker panel armor and mounting hardware	0189 00
1801	Frag 1 kit, right-hand rocker panel overlay and mounting hardware	0189 01
1801	Frag 1 kit, left-hand rocker panel overlay and mounting hardware	0189 02
1801	Frag 1 kit, right-hand fuel filler access cover, C-pillar overlay, and mounting hardware	0189 03
1801	Frag 1 kit, door header overlays and mounting hardware	0189 04
1801	Frag 1 kit, left-hand C-pillar overlay and mounting hardware	0189 05
1801	Frag 1 kit, B-pillar overlay and mounting hardware	0189 06
1801	Frag 1 kit, right-hand A-pillar overlay and mounting hardware	0189 07
1801	Frag 1 kit, left-hand A-pillar overlay and related hardware	0189 08
1801	Frag 1 kit, left-hand mirror mounting bracket and related parts	0189 09

TABLE OF CONTENTS (Cont'd)

		WP Sequence No.
1801	Frag 1A kit, right-hand rocker panel overlay and mounting hardware	0189 10
1801	Frag 1A kit, left-hand rocker panel overlay and mounting hardware	0189 11
1801	Frag 1A kit, right-hand fuel filler access cover, C-pillar overlay, and mounting hardware	0189 12
1801	Frag 1A kit, left-hand C-pillar overlay and mounting hardware	0189 13
1801	Frag 1A kit, right-hand A-pillar overlay and mounting hardware	0189 14
1801	Frag 1A kit, left-hand A-pillar overlay and related hardware	0189 15
1801	Driver side rocker panel armor and mounting hardware	0190 00
1801	Right front underbody armor (serial number 241953 and below)	0190 01
1801	Left front underbody armor (serial number 241953 and below)	0190 02
1801	Left rear underbody armor (serial number 241953 and below)	0190 03
1801	Right rear underbody armor (serial number 241953 and below)	0190 04
1801	A-pillar perimeter armor	0190 05
1801	B-pillar perimeter armor	0190 06
1801	C-partition, C-pillar armor, and related hardware	0190 07
1801	Rear seat backing	0190 08
1801	Right front underbody enhanced IAP armor (serial number 241954 and above)	0190 09
1801	Left front underbody enhanced IAP armor (serial number 241954 and above)	0190 10
1801	Left rear underbody enhanced IAP armor (serial number 241954 and above)	0190 11
1801	Right rear underbody enhanced IAP armor (serial number 241954 and above)	0190 12
1801	Frag 2 right front underbody	0190 13
1801	Frag 2 left front underbody	0190 14
1801	C-partition perimeter armor	0190 15
1801	Rocker cover, C-pillar armor, fuel filler cover, and related hardware	0190 16
1801	Turret cover armor	0190 17
1801	Passenger side A-Pillar armor and mounting hardware	0191 00
1801	Driver side A-Pillar armor and mounting hardware	0192 00
1801	Rear driver side underbody protection	0193 00
1801	Rear passenger side underbody protection	0194 00
1801	Front passenger side underbody protection	0195 00
1801	Front driver side underbody protection	0196 00
1801	Frag 2 kit, left front cowl armor	0196 01
1801	Frag 2 kit, left front wheelwell frag armor	0196 02
1801	Frag 2 kit, right front wheelwell frag armor	0196 03
1801	Enhanced frag 1 right hand A-pillar overlay	0196 04
1801	Enhanced frag 1 left hand A-pillar upper overlay	0196 05
1801	Enhanced frag 1 right C-pillar overlay	0196 06
1801	Enhanced frag 1 left C-pillar overlay	0196 07
1801	Enhanced frag 1 B-pillar overlay (M1151A1/M1165A1/M1167)	0196 08
1801	Enhanced frag 1 B-pillar overlay (M1152A1)	0196 09
1801	Enhanced frag 1 rocker overlay	0196 10
1801	Enhanced frag 1 rocker overlay (M1152A1)	0196 11
1801	Turret hatch door and related parts	0197 00
1801	Weapon station hatch assembly, latch, gunner's sling and related components	0197 01

TABLE OF CONTENTS (Cont'd)

		WP Sequence No.
1801	Weapon station tray assembly, reinforcement tube and related components	0197 02
1801	Armament pintle and panel assemblies, and related parts	0197 03
1801	Turret support ring assembly	0197 04
1801	Traversing assembly	0197 05
1801	Gunner's protection kit	0197 06
1801	Weapon station tray, bearing, mount, and related parts	0197 07
1801	Pintle mount and turret hatch hardware	0198 00
1801	Weapon station	0198 01
1801	Turret assembly-night vision mount	0199 00
1801	Turret assembly covers and related parts	0199 01
1801	Deleted	0200 00
1801	Turret brake assembly	0200 01
1801	Turret frame, gunner's sling, and related parts	0201 00
1801	Weapon station, support bearing, and traversing ring (use with armor kits)	0201 01
1801	Turret weapon station mount	0201 02
1801	Weapon station, brake assembly, gunner's sling, and related parts	0201 03
1801	Pintle assembly and related parts	0201 04
1801	Turret hatch and hinge assembly	0201 05
1801	Tow mount pedestal assembly	0201 06
1801	Tow ITAS cable assembly	0201 07
1801	Traversing unit stowage and depression stop assembly	0201 08
1801	Gunner's platform and traversing unit stowage	0202 00
1801	Adjustable gunner's stand and gunner's platform	0202 01
1801	Gunner's platform assembly and mounting hardware	0202 02
1801	Adjustable gunner's stand and gunner's restraint	0202 03
1801	Gunner's shelter assembly	0202 04
1801	Gunner's shelter	0202 05
1801	Weapon mount	0202 06
1801	Gunner's shelter door and related components	0202 07
1801	Gunner's shelter cover	0202 08
1801	Gunner's shelter door and hardware	0202 09
1801	Fire tray assembly	0202 10
1801	Missle rack	0202 11
1801	Gunner's platform	0202 12
1801	Stowage assembly, evaporator tow	0202 13
1801	Antenna blast shield	0202 14
1802	Battery box bracket assembly	0202 15
1801	Left wheelhouse stowage plate	0202 16
1801	Roof and mounting components	0203 00
1801	Roof armor	0203 01
1801	Perimeter armor and mounting hardware (M1152A1)	0203 02
1801	Aluminum roof mounts and related hardware	0203 03
1801	Aluminum roof and related parts	0203 04
1801	B-pillar and related hardware	0203 05
1801	Interior and exterior net assemblies and related parts	0204 00
1801	Cargo shell door, insulation, intermediate pillar, gas spring, and related components	0205 00
1801	Aluminum cargo shell door, insulation, gas spring and related parts	0205 01
1801	Aluminum cargo shell door and related parts	0205 02
1801	Cargo shell door assembly	0206 00
1801	Cargo shell door assembly, basic, and supplemental armor	0206 01
1801	Cargo door blast shields	0206 02

TABLE OF CONTENTS (Cont'd)

		WP Sequence No.
	1801 Cargo door strap	0206 03
	1801 Cargo shell mounting components	0207 00
	1801 Cargo shell assemblies	0208 00
	1801 Cargo shell assemblies	0208 01
	1801 Aluminum cargo shells and related parts	0208 02
	1801 Tailgate assembly and related parts	0209 00
	1801 Tailgate assembly	0209 01
	1801 Tailgate armor - M1114	0210 00
	1801 Cover, access cargo floor	0210 01
	1801 Plate assembly, tripod	0210 02
	1801 Parking brake access cover and related hardware (serial number 300000 and above)	0210 03
	1802 Windshield assembly	0211 00
	1802 Windshield assembly, ballistic	0211 01
	1802 Ballistic windshield assembly	0211 02
	1802 Windshield assembly	0212 00
	1802 Windshield, folddown	0213 00
	1805 Interior tunnel, cowl, floor insulation, and mounting components (foam)	0214 00
	1805 Interior tunnel, cowl, floor insulation, and mounting components	0214 01
	1805 Underbody insulation	0215 00
	1806 Driver's seat and related parts	0216 00
	1806 Commander's seat and related parts	0217 00
	1806 Rear seat, mounting hardware, and related parts	0218 00
	1806 Rear seats	0218 01
	1806 Commander's seat	0218 02
	1806 Protective padding on B-pillar cover	0219 00
	1806 Gunmount brackets and related parts - M1114	0220 00
	1806 Front seat belts, brackets, and mounting hardware	0221 00
	1806 Front seatbelts (improved restraint)	0221 01
	1806 Rear seatbelts, brackets, and mounting hardware - M1114	0222 00
	1808 Rear seatbelts, brackets, and mounting hardware	0222 01
	1806 Rear seatbelts (improved restraint M1114)	0222 02
	1806 Rear seatbelts (improved restraint)	0222 03
	1808 3-1/2 ton jack stowage straps and mounting hardware	0223 00
	1808 Ammunition and water can stowage trays and mounting hardware	0224 00
	1808 Ammunition and water can stowage trays and mounting hardware	0224 01
	1808 Max tool set straps, flare, warning triangle, first aid kit, and mounting hardware	0225 00
	1808 Fire extinguisher mounting brackets	0226 00
GROUP 20	WINCH	
	2001 Rear hydraulic winch assembly, mounting bracket, and roller assembly	0226 01
	2001 Rear hydraulic winch strap, snatch block, and bypass tube assembly	0226 02
	2001 Rear hydraulic winch hoses and mounting hardware	0226 03
	2001 Rear hydraulic winch hose assemblies, hydro-boost and power steering	0226 04
	2001 Rear hydraulic winch controller switch assembly	0226 05
	2001 Rear hydraulic winch controller plug harness, lead assembly, and related parts	0226 06

TABLE OF CONTENTS (Cont'd)

		WP Sequence No.
	2001 Rear hydraulic winch control valve assembly and mounting parts	0226 07
	2001 Rear hydraulic winch motor	0226 08
	2001 Hydraulic winch drum assembly	0226 09
	2001 Hydraulic winch gearbox	0226 10
	2001 Hydraulic winch pressure relief valve kit and related parts (serial number 246890 and above)	0226 11
GROUP 22	BODY AND CHASSIS ACCESSORY ITEMS	
	2201 Two-man crew soft top enclosure, top assembly, rear curtain, and door assemblies	0227 00
	2201 Mudflaps	0227 01
	2201 Two-man crew soft top enclosure, bow, and mounting components	0228 00
	2201 Troop area soft top enclosure bows and mounting components	0228 01
	2201 Troop area soft top enclosure	0228 02
	2201 Four-man crew soft top enclosure, top assembly, rear curtain, and door assemblies	0228 03
	2202 Four-man crew soft top enclosure, bows, and mounting components	0228 04
	2202 Windshield wiper motor, wiper assembly, and related parts	0229 00
	2202 Windshield wiper assembly	0229 01
	2202 Windshield de-icer and related parts	0230 00
	2202 Split rearview mirror and mounting hardware	0231 00
	2202 Split rearview mirrors and mounting hardware	0231 01
	2202 Standard threat door split rearview mirrors and mounting hardware	0231 02
	2202 Reflectors	0232 00
	2202 Diverter assembly, defroster, and heater ducting	0233 00
	2202 Heater assembly, water valve, and controls	0234 00
	2202 Ammunition and water can stowage	0234 01
	2202 Sun visor assembly and mounting hardware	0235 00
	2202 Radio rack assembly and mounting hardware	0236 00
	2202 Radio rack assembly and mounting hardware	0236 01
	2202 Radio cable, main power – M1114	0237 00
	2202 Communications radio cables and related parts – M1113	0238 00
	2202 Communications radio power cable and related parts (serial number 203980 and above)	0238 01
	2210 Data plates, dash panel	0239 00
	2210 Decals	0239 01
	2210 Data plates, weight, and slave receptacle	0240 00
	2210 Data plates, surge tank, fan shroud, and cook stove	0241 00
	2210 Data plates, fuel pump	0242 00
	2210 Data plate, commander's seat	0243 00
	2210 Data plates, generator, transfer case, and engine container	0244 00
	2210 Data plates, winch	0245 00
	2210 Data plates, rear hatch	0246 00
GROUP 33	SPECIAL PURPOSE KITS	
	3301 Engine shipping container assembly	0247 00
	3303 Arctic kit, two-man crew, bow and mounting components	0248 00
	3303 Arctic kit, two-man crew, curtain fasteners	0249 00
	3303 Arctic kit, two-man crew, top curtain, rear curtain, and door assemblies	0250 00

TABLE OF CONTENTS (Cont'd)

		WP Sequence No.
3303	Engine and crew compartment heater and related parts	0250 01
3303	Engine and crew compartment heater support bracket, heat shield, and mounting hardware	0250 02
3303	Engine and crew compartment heater switch, fuel lines, and mounting hardware	0250 03
3303	Engine and crew compartment heater fuel supply and return lines, muffler, and mounting hardware	0250 04
3303	Engine and crew compartment heater fuel pump, lines, and mounting hardware	0250 05
3303	Rear seat heater and mounting hardware	0250 06
3303	Rear seat heater manifolds and vent	0250 07
3303	Rear seat heater electrical harness and extension	0250 08
3303	Rear seat heater tubes and hoses	0250 09
3303	Rear seat heater line guard and cover	0250 10
3305	Deep water fording kit, intake and exhaust systems	0251 00
3305	Deep water fording kit, selector valve, sensor cup, and vent lines	0252 00
3305	Deep water fording kit, hydro-boost vent line, engine and transmission dipstick, and tube assemblies	0253 00
3307	Kit, front hydraulic winch and mounting brackets (M1113)	0253 01
3307	Kit, front hydraulic winch fairlead roller assembly (M1113)	0253 02
3307	Kit, front hydraulic winch bypass tube and snatch block (M1113)	0253 03
3307	Kit, front hydraulic winch hoses and related parts (M1113)	0253 04
3307	Front hydraulic winch assembly (M1113)	0253 05
3307	Front hydraulic winch motor, valve body, and related parts	0253 06
3307	Kit, front hydraulic winch controller (M1113)	0253 07
3307	Kit, front hydraulic winch controller plug harness (M1113)	0253 08
3307	Front winch mounting brackets and related parts	0254 00
3307	Front winch clutch control	0255 00
3307	Front winch assembly and related parts	0256 00
3307	Rear winch assembly, mounting hardware, and related parts	0257 00
3307	Rear winch clutch control	0258 00
3307	Rear winch vent system – M1114	0259 00
3307	Winch control	0260 00
3307	Winch assembly, front and rear	0261 00
3307	Kit, S250 shelter mounting components	0262 00
3307	Kit, S250 shelter tailgate mounting components	0263 00
3307	Pintle extension kit, electrical connector bracket, and miscellaneous hardware	0264 00
3307	Precision Lightweight Global Positioning System Receiver (PLGR)	0265 00
3307	Kit, brushguard	0266 00
3307	O-GPK windows, mounting brackets, and related hardware	0266 01
3307	O-GPK rear armor and mounting hardware	0266 02
3307	O-GPK cover mounting, base plates, and related hardware	0266 03
3307	O-GPK armor panels and related hardware	0266 04
3307	O-GPK gunner's shield, pintle mount, spacer, and related hardware	0266 05
3307	O-GPK mirror assembly and related hardware	0266 06
3307	BPMTU drive motor assembly and related hardware	0266 07
3307	Night vision cover plate, BPMTU, and related hardware	0266 08
3307	O-GPK manual traversing assembly	0266 09
3307	BPMTU battery box, batteries, cables, and related parts	0266 10
3307	BPMTU power supply cables	0266 11

TABLE OF CONTENTS (Cont'd)

		WP Sequence No.
	3307 O-GPK seat assembly and straps	0266 12
	3307 Kit, rear hatch support	0267 00
	3307 Underbody protection kit with winch, M1114 only	0267 01
	3307 Underbody protection kit with and without winch	0267 02
	3307 Underbody protection kit, transfer case, fuel tank shields, and sway bar link nuts	0267 03
	3307 Gunner's shield and related parts	0267 04
	3307 LVOSS and related parts	0267 05
	3307 AFES crew compartment sensors, brackets, and mounting hardware (M1114)	0267 06
	3307 AFES master controller assembly (M1114)	0267 07
	3307 AFES crew compartment fire extinguisher, mounting bracket, and related hardware (M1114)	0267 08
	3307 AFES cargo compartment fire extinguisher, sensor, mounting bracket, and related hardware (M1114)	0267 09
	3307 AFES cargo compartment fire extinguisher, mounting bracket, sensor, and related hardware (M1151A1)	0267 10
	3307 AFES crew compartment sensor assembly and related parts (M1151A1/ M1165A1)	0267 11
	3307 AFES crew compartment fire extinguisher bottle, mounting bracket, and related hardware (M1151A1/M1165A1)	0267 12
	3307 AFES crew compartment sensor and bracket assembly (M1152A1)	0267 13
	3307 AFES crew compartment fire extinguisher, mounting bracket, and related hardware (M1152A1)	0267 14
	3307 AFES master controller and bracket assembly (standard radio rack, M1151A1, M1152A1, M1165A1)	0267 15
	3307 AFES master controller and bracket assembly (integrated radio rack, M1151A1, M1152A1, M1165A1)	0267 16
GROUP 47	GAGES, WEIGHING, AND MEASURING DEVICES	
	4701 Speedometer, speedometer drive, and related parts (serial number 246889 and below)	0268 00
	4701 Speedometer, speedometer drive, and related parts	0268 01
	4702 Air restriction indicator assembly	0269 00
GROUP 52	REFRIGERATION, AIR CONDITIONER/HEATER, AND AIR CONDITIONING COMPONENTS	
	5203 A/C insulation, front door, left and right sides	0270 00
	5203 HVAC insulation, covers, and mounting hardware	0270 01
	5203 A/C insulation, rear door, left and right sides	0271 00
	5203 A/C insulation, turret	0272 00
	5203 A/C insulation, roof	0273 00
	5203 A/C compressor, idler pulley, tensioner, and mounting hardware	0274 00
	5203 A/C compressor, idler pulley, tensioner, and related parts (serial number 196901 and above)	0274 01
	5203 Dryer assembly, trinary switch, and related parts	0275 00
	5203 Rear receiver/dryer	0275 01
	5203 A/C system circuit breakers	0275 02
	5203 A/C wiring harness, switch jumper	0275 03
	5203 A/C wiring harness (2-man A/C system)	0275 04
	5203 A/C wiring harness (2-man condenser fans)	0275 05
	5203 A/C wiring harness (4-man A/C system)	0275 06
	5203 A/C wiring harness (4-man condenser fans)	0275 07
	5203 A/C wiring harness (rear blower motor)	0275 08

TABLE OF CONTENTS (Cont'd)

		WP Sequence No.
	5217 A/C toggle switch, harness, and air distribution duct assembly	0276 00
	Deleted	0277 00
	5217 High and low pressure A/C lines	0277 01
	5217 A/C cooling tubes, hoses, wiring harness and related parts	0277 02
	5217 A/C cooling tubes, hoses, wiring harness, access cover, and related parts	0277 03
	5217 A/C hard lines and hoses, two-man crew	0277 04
	5217 A/C hard lines and hoses, four-man crew	0277 05
	5217 Heater shutoff valve	0277 06
	5217 A/C compressor and manifold	0277 07
	Deleted	0278 00
	5217 Condenser fan access panel	0280 00
	5217 Rear A/C dryer condenser	0280 01
	Deleted	0281 00
	5217 Rear A/C condenser fans and shroud	0282 00
	5217 A/C condenser fan mounting	0282 01
	5217 A/C condenser fan lines	0282 02
	5217 A/C condenser fan intake grill	0282 03
	5217 A/C condenser fan wheelwell closeout	0282 04
	5217 Rear A/C condenser and tray assembly	0283 00
	5241 A/C de-ice relays and mounting hardware	0283 01
	5241 A/C wiring harness, relays, circuit breaker, A/C control module, and related parts	0284 00
	5241 Front evaporator/heater assembly mounting and related parts	0285 00
	5241 Front evaporator expansion valve	0286 00
	5241 Front evaporator/heater, case, and related parts	0287 00
	5241 Rear A/C air distribution duct and register	0288 00
	5241 Front A/C assembly	0288 01
	5241 Front A/C evaporator assembly	0288 02
	5241 Front A/C blower motor	0288 03
	5241 Rear A/C evaporator assembly	0289 00
	5241 Rear evaporator	0289 01
GROUP 94	REPAIR PARTS KITS	
	9401 Kits	0290 00
GROUP 95	BULK ITEMS	
	9501 Bulk	0291 00
GROUP 26	TOOLS AND TEST EQUIPMENT	
	2604 Special tools	0292 00
	2604 Special tools	0293 00
	2604 Special tools	0294 00
	2604 Special tools	0295 00
	2604 Special tools, drive belts and transmission	0296 00
	2604 Special tools, transmission	0297 00
	2604 Special tools, transfer case	0298 00
	2604 Special tools, axle differential	0299 00
	2604 Special tools, geared hub and steering	0300 00
	2604 Special tools, steering pump, body, and speedometer drive	0301 00
	2604 Special tools, multipurpose	0302 00
	2604 Special tools, transmission and engine	0303 00
	2604 Special tools, transmission and engine	0304 00
	2604 Special tools, pinion setting kit	0305 00

TABLE OF CONTENTS (Cont'd)

		WP Sequence No.
	2604 Special tools, transmission and engine	0304 00
	2604 Special tools, pinion setting kit	0305 00
GROUP 47	GAGES, WEIGHING, AND MEASURING DEVICES	
	4701 Speedometer, speedometer drive, and related parts (serial number 300000 and above)	0268 01
	CROSS-REFERENCE INDEXES	
	National Stock Number Index	0306 00
	Part Number Index	0307 00

UNIT, DIRECT SUPPORT, AND GENERAL SUPPORT MAINTENANCE REPAIR PARTS AND SPECIAL TOOLS LIST

TRUCK, UTILITY: S250 SHELTER CARRIER, 4X4, M1113 (2320-01-412-0143) (EIC: B6B); TRUCK, UTILITY: UP-ARMORED CARRIER, 4X4, M1114 (2320-01-413-3739) (EIC: B6C); TRUCK, UTILITY: EXPANDED CAPACITY, ARMAMENT CARRIER, M1151 (2320-01-518-7330) (EIC: BA5); TRUCK, UTILITY: EXPANDED CAPACITY ARMAMENT CARRIER, IAP/ARMOR READY, M1151A1 (2320-01-540-2038) (EIC: BEG); TRUCK, UTILITY: EXPANDED CAPACITY, ENHANCED, M1152 (2320-01-518-7332) (EIC: BA6); TRUCK, UTILITY: EXPANDED CAPACITY, ENHANCED, IAP/ARMOR READY, M1152A1 (2320-01-540-2007) (EIC: BEH); TRUCK, UTILITY: COMMAND AND CONTROL/GENERAL PURPOSE VEHICLE, M1165 (2320-01-540-1993) (EIC: BEK); TRUCK, UTILITY: COMMAND AND CONTROL/GENERAL PURPOSE VEHICLE, IAP/ARMOR READY, M1165A1 (2320-01-540-2017) (EIC: BEJ;) TRUCK, UTILITY: EXPANDED CAPACITY, TOW ITAS CARRIER, M1167 (2320-01-544-9638).

INTRODUCTION

SCOPE

This RPSTL lists and authorizes spare and repair parts; special tools; special test, measurement, and diagnostic equipment (TMDE); and other special support equipment required for performance of unit, direct support, and general support maintenance of the M1113, M1114, M1151, M1151A1, M1152, M1152A1, M1165, M1165A1, and M1167 Expanded Capacity Vehicles (ECV). It authorizes the requisitioning, issue, and disposition of spares, repair parts, and special tools as indicated by the source, maintenance, and recoverability (SMR) codes.

GENERAL

In addition to the Introduction Work Package, this Repair Parts and Special Tools List is divided into the following work packages:

1. Repair Parts List Work Packages. Work packages containing lists of spare and repair parts authorized by this RPSTL for use in the performance of maintenance. The list also includes parts which must be removed for replacement of the authorized parts. Parts lists are composed of functional groups in ascending alphanumeric sequence, with the parts in each group listed in ascending figure and item number sequence. Sending units, brackets, filters, and bolts are listed with the component they mount on. Bulk materials are listed by item name in FIG BULK at the end of the work package. Repair parts kits are listed separately in their own functional group and work package. Repair parts for reparable special tools are also listed in a separate work package. Items listed are shown on the associated illustration(s)/figure(s).

2. Special Tools List Work Packages. Work packages containing lists of special tools, special TMDE, and special support equipment authorized by this RPSTL (as indicated by Basis of Issue (BOI) information in DESCRIPTION AND USABLE ON CODE column). Tools that are components of common tool sets and/or Class VII are not listed.

3. Cross-Reference Indexes Work Packages. There are two cross-reference indexes work packages in this RPSTL: The National Stock Number (NSN) Index work package and the Part Number (P/N) Index work package. The National Stock Number Index work package refers you to the figure and item number appearance. The Part Number Index work package list all part numbers in alphanumeric sequence and refers you to the figure and item number appearance.

EXPLANATION OF COLUMNS IN THE REPAIR PARTS LIST AND SPECIAL TOOLS LIST WORK PACKAGES

Item No. (Column (1)). Indicates the number used to identify items called out in the illustration.

SMR Code (Column (2)). The Source, Maintenance, and Recoverability (SMR) code is a 5-position code containing supply/requisitioning information, maintenance category authorization criteria, and disposition instruction, as shown in the following breakout:

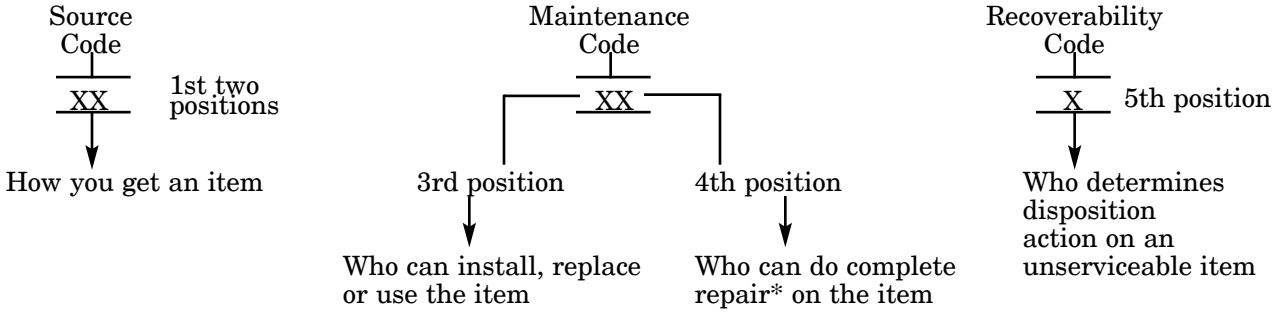

* Complete Repair: Maintenance capacity, capability, and authority to perform all corrective maintenance tasks of the Repair function in a use/user environment in order to restore serviceability to a failed item.

Source Code. The source code tells you how to get an item needed for maintenance, repair, or overhaul of an end item/equipment. Explanations of source codes follows:

Code	Explanation
PA PB PC** PD PE PF PG	Stocked items; use the applicable NSN to request/requisition items with these source codes. They are authorized to the category indicated by the code entered in the 3rd position of the SMR code. ** NOTE: Items coded PC are subject to deterioration.
KD KF KB	Items with these codes are not to be requested/requisitioned individually. They are part of a kit which is authorized to the maintenance category indicated in the 3rd position of the SMR code. The complete kit must be requisitioned and applied.
MO- (Made at Unit Level) MF- (Made at DS Level) MH- (Made at GS Level) ML- (Made at Specialized Repair Act (SRA)) MD- (Made at Depot)	Items with these codes are not to be requested/requisitioned individually. They must be made from bulk material which is identified by the part number in the DESCRIPTION AND USABLE ON CODE (UOC) column and listed in the bulk material group of the repair parts list in the RPSTL. If the item is authorized to you by the 3rd position code of the SMR code, but the source code indicates it is made at a higher level, order the item from the higher level of maintenance.
AO- (Assembled by Unit Level) AF- (Assembled by DS Level) AH- (Assembled by GS Level) AL- (Assembled by SRA) AD- (Assembled by Depot)	Items with these codes are not to be requested/requisitioned individually. The parts that make up the assembled item must be requisitioned or fabricated and assembled at the level of maintenance indicated by the source code. If the 3rd position code of the SMR code authorized you to replace the item, but the source code indicates the item is assembled at a higher level, order the item from the higher level of maintenance.

XA- Do not requisition an XA-coded item. Order its next higher assembly. (Also, refer to the note below.)
XB- If an XB item is not available from salvage, order it using CAGEC and part number given.
XC- Installation drawing, diagram, instruction sheet, field service drawing, that is identified by manufacturer's part number.
XD- Item is not stocked. Order an XD-coded item through normal supply channels using the CAGEC and part number given, if no NSN is available.

NOTE

Cannibalization or controlled exchange, when authorized, may be used as a source of supply for items with the above source codes, except for those source coded XA.

Maintenance Code. Maintenance codes tell you the level(s) of maintenance authorized to USE and REPAIR support items. The maintenance codes are entered in the third and fourth positions of the SMR code as follows:

Third Position. The maintenance code entered in the third position tells you the lowest maintenance level authorized to remove, replace, and use an item. The maintenance code entered in the third position will indicate authorization to one of the following levels of maintenance.

Code	Application/Explanation
C	– Crew or operator maintenance done within organizational maintenance.
O	– Unit level can remove, replace, and use the item.
F	– Direct support level can remove, replace, and use the item.
H	– General support level can remove, replace, and use the item.
L	– Specialized repair activity can remove, replace, and use the item.
D	– Depot level can remove, replace, and use the item.

Fourth Position. The maintenance code entered in the fourth position tells you whether or not the item is to be repaired and identifies the lowest maintenance level with the capability to do complete repair (i.e., perform all authorized repair functions).

NOTE

Some limited repair may be done on the item at a lower level of maintenance, if authorized by the Maintenance Allocation Chart (MAC) and SMR codes.) This position will contain one of the following maintenance codes.

Code	Application/Explanation
O	– Unit is the lowest level that can do complete repair of the item.
F	– Direct support is the lowest level that can do complete repair of the item.
H	– General support is the lowest level that can do complete repair of the item.
L	– Specialized repair activity (designate the specialized repair activity) is the lowest level that can do complete repair of the item.
D	– Depot is the lowest level that can do complete repair of the item.
Z	– Nonrepairable. No repair is authorized.
B	– No repair is authorized. (No parts or special tools are authorized for the maintenance of a B-coded item.) However, the item may be reconditioned by adjusting, lubricating, etc., at the user level.

Recoverability Code. Recoverability codes are assigned to items to indicate the disposition action on unserviceable items. The recoverability code is entered in the fifth position of the SMR code as follows:

Recoverability Code	Application/Explanation
Z	– Nonrepairable item. When unserviceable, condemn and dispose of the item at the level of maintenance shown in 3rd position of SMR code.
O	– Reparable item. When uneconomically reparable, condemn and dispose of the item at unit level.
F	– Reparable item. When uneconomically reparable, condemn and dispose of the item at the direct support level.
H	– Reparable item. When uneconomically reparable, condemn and dispose of the item at the general support level.
D	– Reparable item. When beyond lower level repair capability, return to depot. Condemnation and disposal of item not authorized below depot level.
L	– Reparable item. Condemnation and disposal not authorized below specialized repair activity (SRA).
A	– Item requires special handling or condemnation procedures because of specific reasons (e.g.; precious metal content, high dollar value, critical material, or hazardous material). Refer to appropriate manuals/directives for specific instructions.

NSN (Column (3)). The NSN for the item is listed in this column.

CAGEC (Column (4)). The Commercial and Government Entity Code (CAGEC) is a 5-digit numeric code is used to identify the manufacturer, distributor, or Government agency/activity, that supplies the item.

Part Number (Column (5)). Indicates the primary number used by the manufacturer (individual, company, firm, corporation, or Government activity), which controls the design and characteristics of the item by means of its engineering drawings, specifications standards, and inspection requirements to identify an item or range of items. Part numbers not available (N/A) will be provided as updates to this manual when available.

NOTE

When you use a NSN to requisition an item, the item you receive may have a different part number from the part ordered.

Description and Usable on Code (UOC) (Column (6)). This column includes the following information:

(1) The Federal item name and, when required, a minimum description to identify the item.

(2) Items that are included in kits and sets are listed below the name of the kit or set.

(3) Spare/repair parts that make up an assembled item are indented and listed immediately following the assembled item line entry.

(4) Part numbers for bulk materials are referenced in this column in the line item entry for the item to be manufactured/fabricated.

(5) When the item is not used with all serial numbers of the same model, the effective serial numbers are shown on the last line(s) of the description (before UOC).

(6) The usable on code, when applicable (refer to paragraph 5, Special Information).

(7) In the Special Tools List section, the Basis of Issue (BOI) appears as the last line(s) in the entry for each special tool, special TMDE, and other special support equipment. When density of equipment supported exceeds density spread indicated in the Basis of Issue, the total authorization is increased proportionately.

(8) The statement END OF FIGURE appears just below the last item description in column 6 for a given figure in both the repair parts list and special tools list work packages.

QTY (Column (7)). The QTY (quantity per figure column) indicates the quantity of the item used in the breakout shown on the illustration figure, which is prepared for a functional group, subfunctional group, or an assembly. A "V" appearing in this column in lieu of a quantity indicates that the quantity is variable and the quantity may change from application to application.

EXPLANATION OF CROSS-REFERENCE INDEXES WORK PACKAGES FORMAT AND COLUMNS

1. National Stock Number (NSN) Index Work Packages.

STOCK NUMBER Column. This column lists the NSN by National Item Identification Number (NIIN) sequence. The NIIN consists of the last nine digits of the NSN (i.e., $\overline{5305\text{-}01\text{-}674\text{-}1467}$). When using this column to locate an item, ignore the first 4 digits of the NSN. However, the complete NSN should be used when ordering items by stock number.

NSN

NIIN

FIG. Column. This column lists the number of the figure where the item is identified/located. The figures are in numerical order in the repair parts and special tools list work packages.

ITEM Column. The item number identifies the item associated with the figure listed in the adjacent FIG. column. This item is also identified by the NSN listed on the same line.

2. Part Number (P/N) Index Work Package. Part numbers in this index are listed by part number in ascending alphanumeric sequence (i.e., vertical arrangement of letter and number combination which places the first letter or digit of each group in order A through Z, followed by the numbers 0 through 9 and each following letter or digit in like order).

CAGEC Column. The Commercial and Government Entity Code (CAGEC) is a 5-digit numeric code used to identify the manufacturer, distributor, or Government agency, etc., that supplies the item.

PART NUMBER Column. Indicates the primary number used by the manufacturer (individual, company, firm, corporation, or Government activity), which controls the design and characteristics of the item by means of its engineering drawings, specifications standards, and inspection requirements to identify an item or range of items.

STOCK NUMBER Column. This column lists the NSN for the associated part number and manufacturer identified in the PART NUMBER and CAGEC columns to the left

FIG. Column. This column lists the number of the figure where the item is identified/located in the repair parts list and special tool list work packages.

ITEM Column. The item number is that number assigned to the item as it appears in the figure referenced in the adjacent figure number column.

SPECIAL INFORMATION

USABLE ON CODE. The usable on code appears in the lower left corner of the Description column heading. Usable on codes are shown as "UOC: . . . . . ." in the Description Column (justified left) on the first line applicable item description/nomenclature. Uncoded items are applicable to all models. Identification of the usable on codes used in the RPSTL are:

Code	Used On	Code	Used On
XAA	M1113	UU1	M1165
XBB	M1114	TTA	M1151A1
TTT	M1151	UUA	M1152A1
UUU	M1152	UU2	M1165A1
		TT1	M1167

Fabrication Instructions. Bulk materials required to manufacture items are listed in the Bulk Material Functional Group of this RPSTL. Part numbers for bulk materials are also referenced in the description column of the line item entry for the item to be manufactured/fabricated. Detailed fabrication instructions for items source code to be manufactured or fabricated are found in TM 9-2320-387-24.

Assembly Instruction. Detailed assembly instructions for items source coded to be assembled from component spare/repair parts are found in TM 9-2320-387-24. Items that make up the assembly are listed immediately following the assembly item entry or reference is made to an applicable figure.

Kits. Line item entries for repair parts kits appear in group 9401 KITS in the repair parts list work packages.

Index Numbers. Items which have the word BULK in the figure column will have an index number shown in the item number column. This index number is a cross-reference between the National Stock Number/Part Number Index and the bulk material list in the repair parts list work packages.

Associated Publications. The publications listed below pertain to the M1113, M1114, M1151, M1152, M1165, M1151A1, M1152A1, M1165A1, and M1167 Expanded Capacity Vehicles (ECV) and their components:

TM 9-2320-387-10	Operator's Manual
TM 9-2320-387-10HR	Hand Receipt, Operator's Manual
TM 9-2320-387-24	Unit, Direct Support, and General Support Maintenance Manual

Illustrations. Item numbers on illustrations have been assigned in clockwise sequence, starting at the 11 o'clock position (upper left).

BOI. The Basis of Issue (BOI) for the tools listed in section III of this RPSTL is as follows:

Level	Unit Description	BOI
Unit (O)	Maintenance unit, section or team (authorized a common tool set)	1
Direct Support (DS)	Company/System Support Team (except the following)	1
	Motorized Division.Heavy Division Heavy Maintenance Co.	2
	Airborne/Assault Division Forward Support Co.	2
	Heavy Maintenance Co.	3
	Light Infantry Division Heavy Maintenance Co.	6
	Light Maintenance Co.	0
General Support (GS)	Maintenance Co.	1
	Heavy Equipment Maintenance Co.	2

The NSN's for the Unit, Direct Support, and General Support Special Tool Kit are listed on page G-2 thru G-8, in Section II of the TM 9-2320-387-24-2 manual.

HOW TO LOCATE REPAIR PARTS

When National Stock Number or Part Number is Not Known.

(1) First. Using the table of contents, determine the assembly group or subassembly group to which the item belongs. This is necessary since figures are prepared for assembly groups and subassembly groups, and listings are divided into the same groups.

(2) Second. Find the figure covering the assembly group or subassembly group to which the item belongs.

(3) Third. Identify the item on the figure and use the Figure and Item Number Index to find the NSN.

When National Stock Number or Part Number is Known.

(1) First. Using the Index of National Stock Numbers and Part Numbers, find the pertinent National Stock Number or Part Number. The NSN index is in National Item Identification Number (NIIN) sequence (see 4.a.(1)). The part numbers in the Part Number index are listed in ascending alphanumeric sequence (see 4.b.). Both indexes cross-reference you to the illustration figure and item number of the item you are looking for.

(2) Second. After finding the figure and item number, verify that the item is the one you're looking for, then locate the item number in the repair parts list for the figure.

END OF WORK PACKAGE

UNIT, DIRECT SUPPORT, AND GENERAL SUPPORT MAINTENANCE
REPAIR PARTS AND SPECIAL TOOLS LIST

TRUCK, UTILITY: S250 SHELTER CARRIER, 4X4, M1113 (2320-01-412-0143),
TRUCK, UTILITY: UP-ARMORED CARRIER, 4X4, M1114 (2320-01-413-3739)

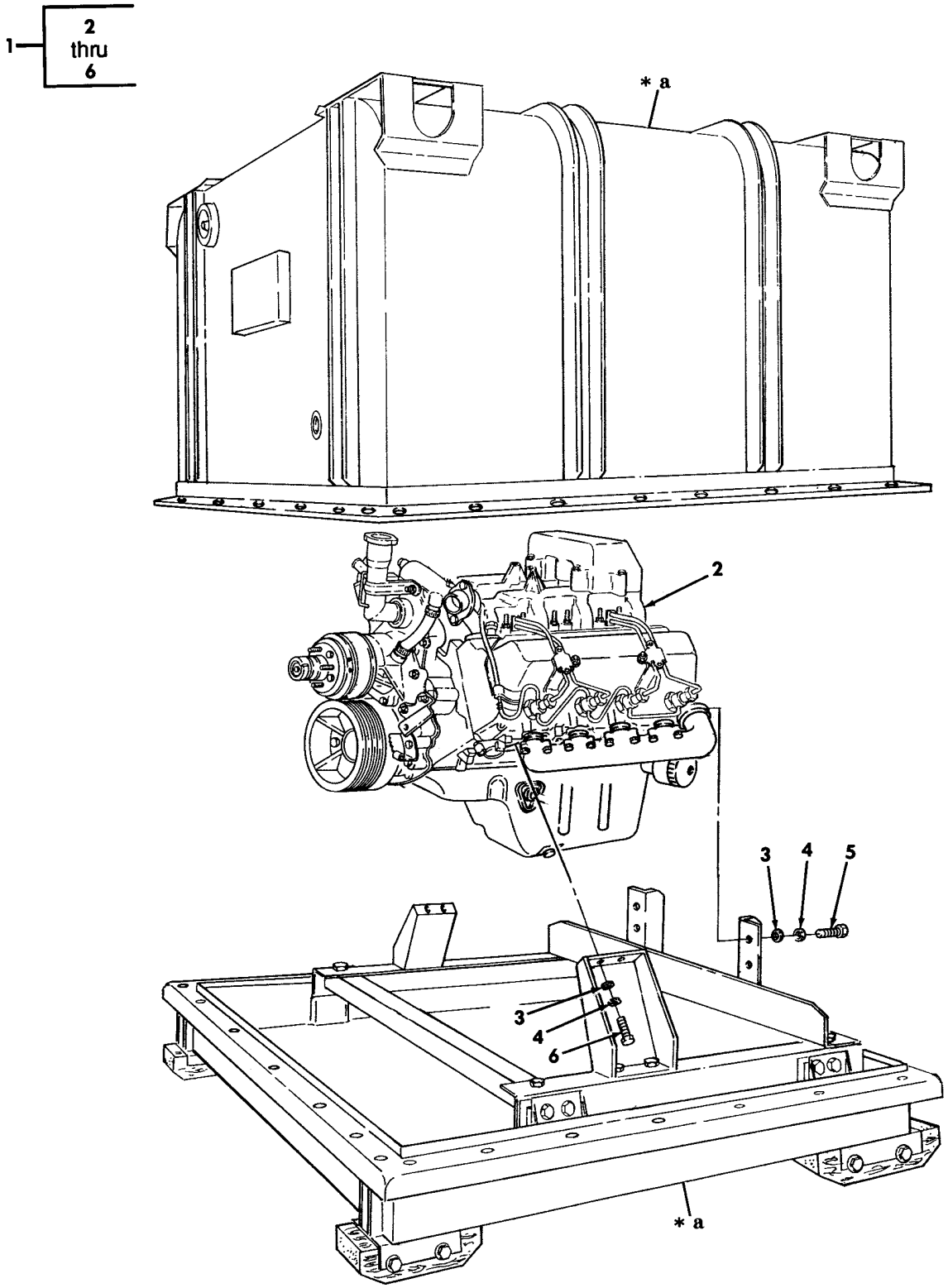

* a PART OF ITEM 1

Figure 1. Engine and Container Assembly.

(1) ITEM NO	(2) SMR CODE	(3) NSN	(4) CAGEC	(5) PART NUMBER	(6) DESCRIPTION AND USABLE ON CODES(UOC)	(7) QTY
					GROUP 01 ENGINE	
					0100 ENGINE ASSEMBLY	
					FIG. 1 ENGINE AND CONTAINER ASSEMBLY	
1	PAFHH	2815014204180	19207	57K3241	ENGINE WITH CONTAIN 6.5 LITER TURBO,1996.....	1
1	PAFHH	2815014398164	19207	57K3526	ENGINE,WITH CONTAIN 6.5 LITER TURBO,1997.....	1
1	PAFHH	2815014537402	19207	57K3538	ENGINE WITH CONTAIN 6.5 LITER TURBO,1998.....	1
1	PAFHH		19207	57K3544	ENGINE WITH CONTAIN 6.5 LITER TURBO,1999.....	1
1	PAFHH	2815014398164	19207	57K3557	ENGINE,WITH CONTAIN 6.5 LITER TURBO,2000.....	1
2	XAFHH		34623	RCSK18263	.ENGINE,DIESEL 6.5 LITER TURBO,1996	1
2	XAFHH		19207	12460477	.ENGINE,DIESEL 6.5 LITER TURBO,1997	1
2	XAFHH		19207	12469051	.ENGINE,DIESEL 6.5 LITER TURBO,1998	1
2	XAFHH		19207	12469089	.ENGINE,DIESEL 6.5 LITER TURBO,1999	1
2	XAFHH		19207	12469163	.ENGINE,DIESEL 6.5 LITER TURBO,2000	1
3	PAFZZ	5310008094061	96906	MS27183-15	.WASHER,FLAT 7/16.....	8
4	PAFZZ	5310006379541	96906	MS35338-46	.WASHER,LOCK 3/8.....	8
5	PAFZZ	5305007813926	80204	B1821BH038C275N	.SCREW,CAP,HEXAGON H 3/8-16 X 2.750	4
6	PAFZZ	5305005432419	80204	B1821BH038C113N	.SCREW,CAP,HEXAGON H 3/8-16 X 1.125	4

END OF FIGURE

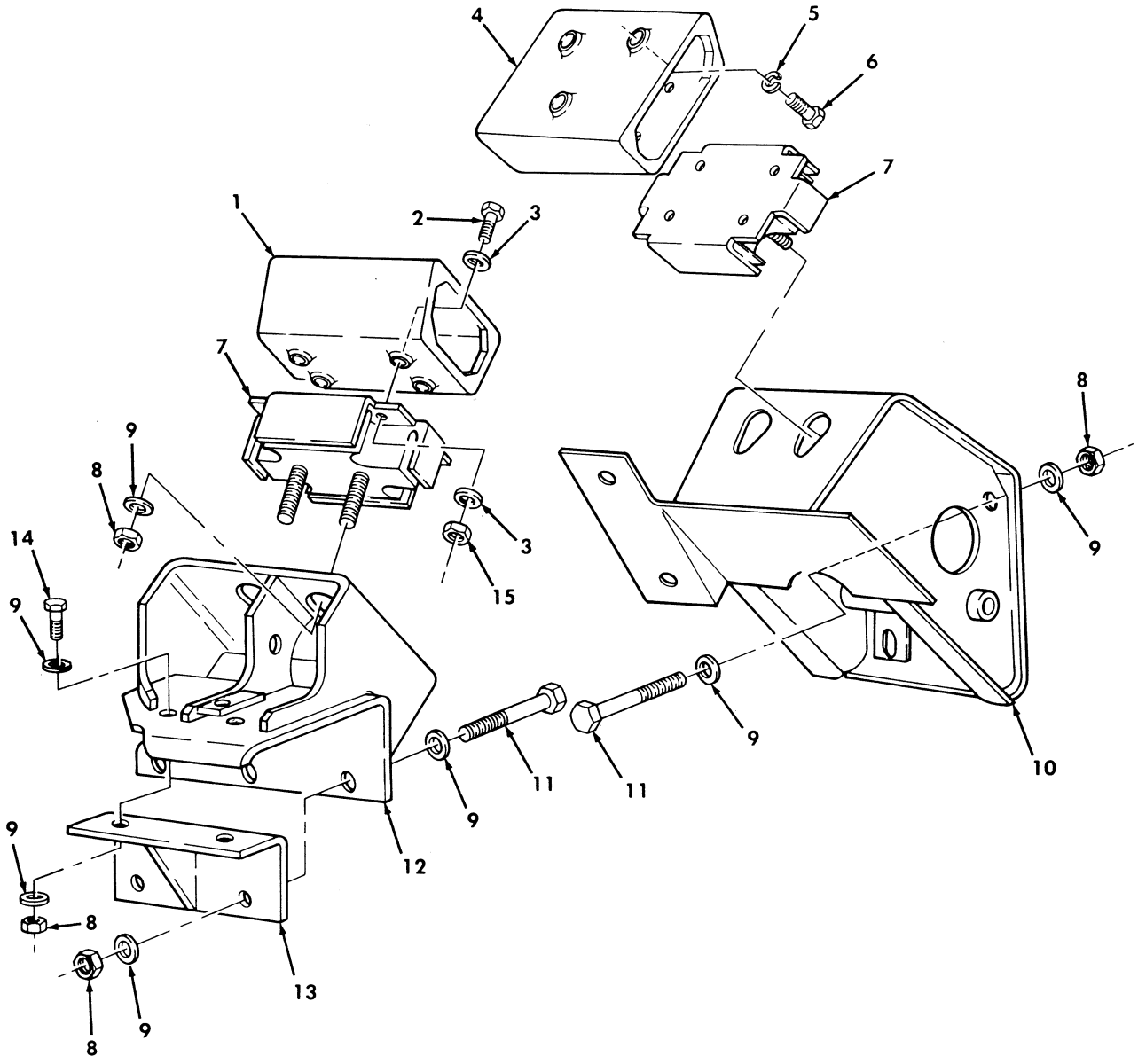

Figure 2. Engine Mounting Brackets.

(1) ITEM NO	(2) SMR CODE	(3) NSN	(4) CAGEC	(5) PART NUMBER	(6) DESCRIPTION AND USABLE ON CODES(UOC)	(7) QTY
					GROUP 0100 ENGINE ASSEMBLY	
					FIG. 2 ENGINE MOUNTING BRACKETS	
1	PAFZZ	2510011856115	19207	12339133	BRACKET,MOUNT RESIL R.H.....	1
2	PAFZZ	5305000680511	80204	B1821BH038C125N	SCREW,CAP,HEXAGON H 3/8-16 X 1.25..	8
* 3	PAFZZ	5310000806004	96906	MS27183-14	WASHER,FLAT 3/8.....	16
4	PAFZZ	2510011856112	19207	12339132	BRACKET,ENGINE MOUN L.H.....	1
* 5	PAFZZ	5310006379541	80205	MS35338-46	WASHER,LOCK 3/8,1996 THRU 1998.....	6
5	PAFZZ	5310012067306	7X677	11500207	WASHER,LOCK 1999 AND ABOVE.....	6
6	PAFZZ	5305000680510	80204	B1821BH038C100N	SCREW,CAP,HEXAGON H 3/8-16 X 1.00 1996 THRU 1998.....	6
6	PAFZZ	5305013803395	80204	B18231B10025NF	SCREW,CAP,HEXAGON H 1999 AND ABOVE.	6
* 7	PAFZZ	5342011899982	19207	12339179	MOUNT,RESILIENT.....	2
8	PAFZZ	5310004883889	96906	MS51943-39	NUT,SELF-LOCKING,HE 1/2-13.....	13
9	PAFZZ	5310011211703	06032	2130-0143-001	WASHER,FLAT 1/2.....	22
10	PAFZZ	2510011856113	19207	12338205	BRACKET,ENGINE MOUN.....	1
11	PAFZZ	5305000712081	80204	B1821BH050C450N	SCREW,CAP,HEXAGON H 1/2-13 X 4.50..	7
12	PAFZZ	2510011856114	19207	12338183	BRACKET,ENGINE MOUN R.H.....	1
13	PAFZZ	5340011867173	19207	12338163	BRACKET,ANGLE R.H.....	1
14	PAFZZ	5305000712067	80204	B1821BH050C125N	SCREW,CAP,HEXAGON H 1/2-13 X 1.25..	2
15	PAFZZ	5310009359021	96906	MS51943-35	NUT,SELF-LOCKING,HE 3/8-16.....	8

END OF FIGURE

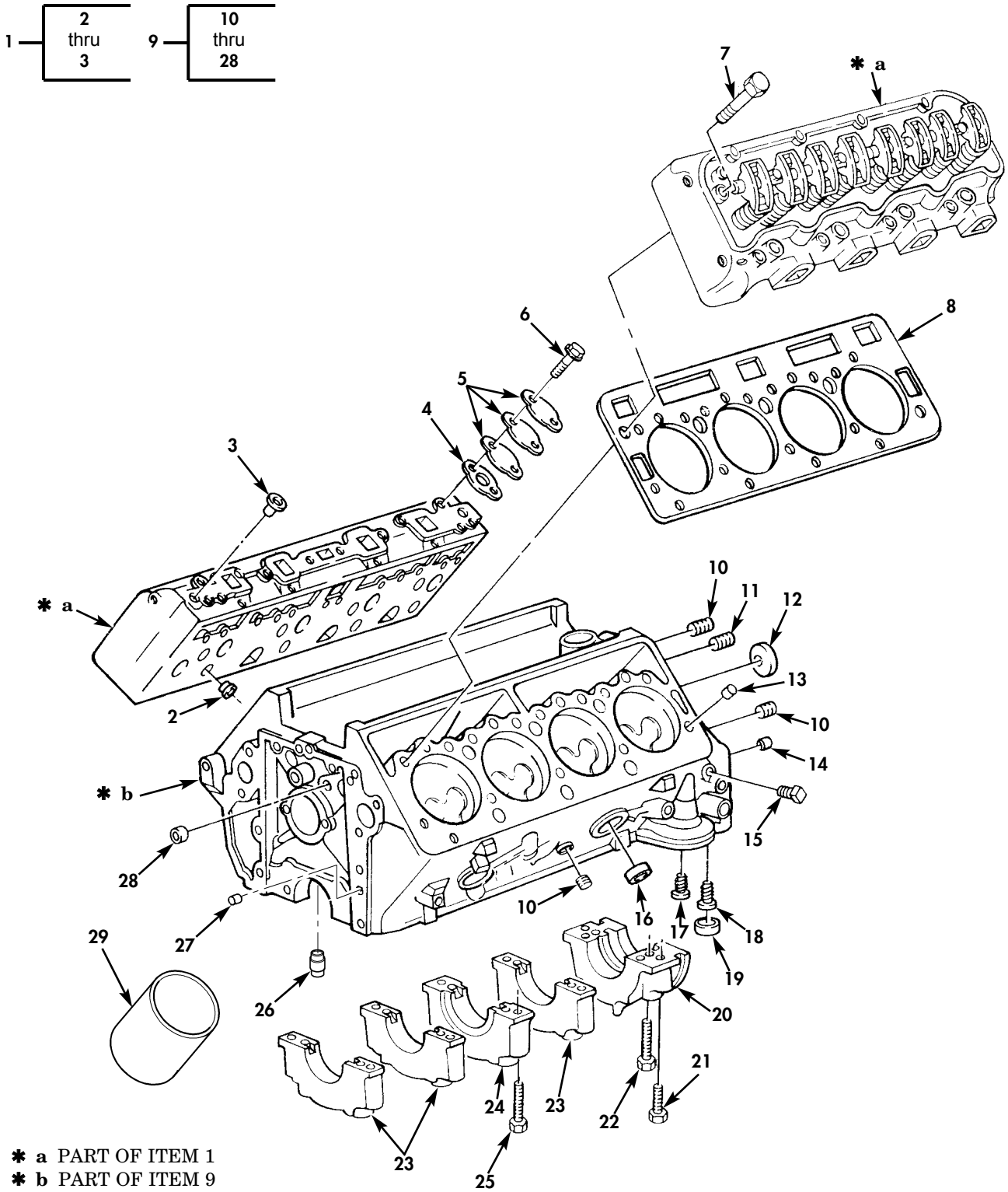

Figure 3. Engine Block, Cylinder Head, and Drain Tube (Sheet 1 of 2).

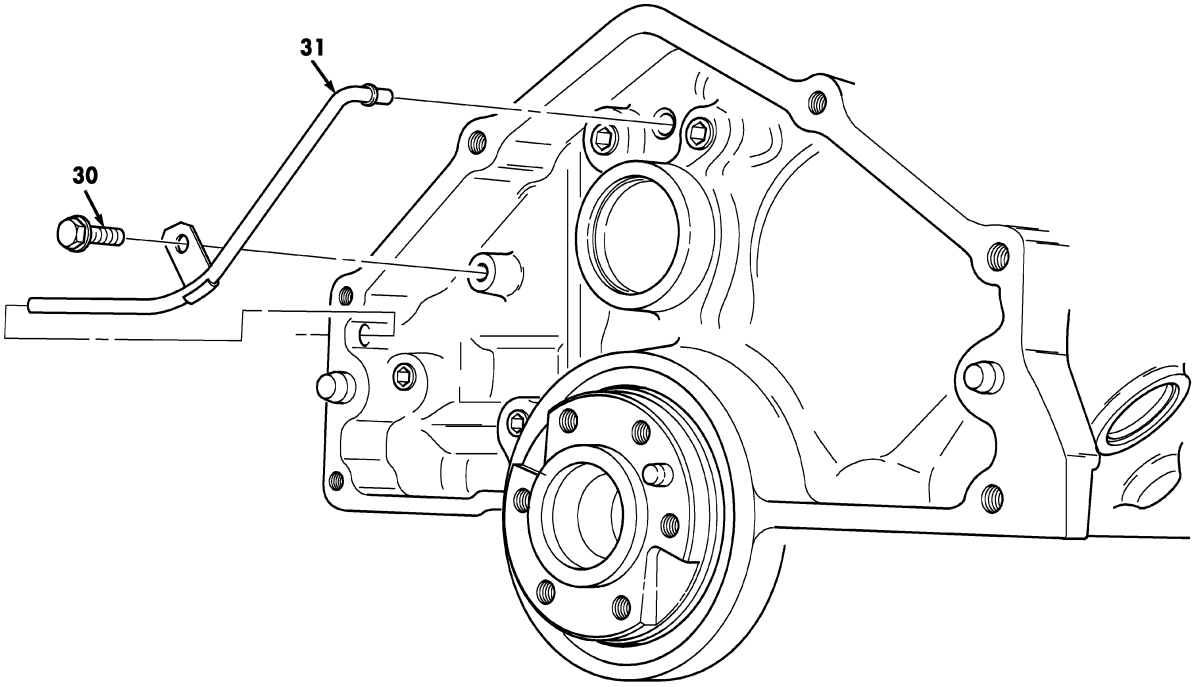

Figure 3. Engine Block, Cylinder Head, and Drain Tube (Sheet 2 of 2).

(1) ITEM NO	(2) SMR CODE	(3) NSN	(4) CAGEC	(5) PART NUMBER	(6) DESCRIPTION AND USABLE ON CODES(UOC)	(7) QTY
					GROUP 0101 CRANKCASE, BLOCK, CYLINDER HEAD	
					FIG. 3 ENGINE BLOCK,CYLINDER HEAD, AND DRAIN TUBE	
* 1	PAFHH	2815014949210	7X677	12553853	CYLINDER HEAD,DIESE 1996.....	2
* 1	PAFHH	2815014351707	7X677	12556822	CYLINDER HEAD,DIESE 1997 AND ABOVE.	2
2	PAHZZ	2815014371016	7X677	10149629	.CHAMBER,PRECOMBUSTI 1996.....	8
2	PAHZZ	2815014371017	7X677	10230567	.CHAMBER,PRECOMBUSTI 1996.....	8
* 2	PAHZZ	2835014692648	24617	10183926	.CHAMBER,PRECOMBUSTI 1997 AND ABOVE	8
* 2	PAHZZ	2835014692644	24617	12550985	.CHAMBER,PRECOMBUSTI 1997 AND ABOVE 6.5 LITER 0.010 OVERSIZED.....	8
* 3	PAFZZ	5340011665640	7X677	14025517	.PLUG,EXPANSION.....	4
* 4	PAFZZ	5330011490874	7X677	10137488	GASKET PART OF KIT P/N 12456409	2
5	PAFZZ	5340011646436	7X677	14045274	COVER,ACCESS.....	2
6	PAFZZ	5305013976850	24617	11502685	SCREW,CAP,HEXAGON H #10-1.5 X 20.0 MM.....	4
7	PAFZZ	5306014108159	7X677	14077194	BOLT,MACHINE.....	34
* 8	PAFZZ	5330014856499	24617	12556031	GASKET 6.5 LITER TURBO PART OF KIT. 12456409.....	2
* 9	XAHHH		7X677	12553121	BLOCK ASSEMBLY 1996.....	1
* 9	XAHHH		11862	12555490	BLOCK ASSEMBLY 1997.....	1
* 9	XAHHH		7X677	12559372	BLOCK ASSEMBLY 1998.....	1
* 9	XAHHH		7X677	12561421	BLOCK ASSEMBLY 1999,2000.....	1
* 10	PAFZZ	4730000444655	30379	444655	.PLUG,PIPE,MAGNETIC OIL PASSAGE,1/ 4-18.....	5
11	PAFZZ	5365011544378	7X677	444782	.PLUG,MACHINE THREAD OIL GALLERY,3/ 8-18.....	1
12	PAHZZ	5340011497977	7X677	3999200	.PLUG,EXPANSION CAMSHAFT.....	1
13	PAFZZ	5365011623797	7X677	12558081	.SPACER,RING.....	4
* 14	PAFZZ	5315011861352	7X677	12338119	.PIN,STRAIGHT,HEADLE FLYWHEEL HOUSING.....	2
15	PAFZZ	4730001874202	81348	WW-P-471AASBCC	.PLUG,PIPE 3/8-18.....	1
16	PAFZZ	5340004496408	7X677	10000462	.CAP,PROTECTIVE,DUST.....	6
17	PAHZZ	4820014369135	7X677	25014006	.VALVE,SAFETY RELIEF FILTER BY-PASS	1
18	PAHZZ	4820014407461	7X677	25161285	.VALVE,REGULATING,FL OIL COOLER BY-PASS.....	1
19	PAHZZ	2815011660621	7X677	14066310	.PLUG,PISTON PIN OIL COOLER BY-PASS	1
20	XAHZZ		7X677	10183978	.CAP,PILLOW BLOCK CRANKSHAFT BEARING NO.5.....	1
21	PAHZZ	5306011499668	7X677	14077192	.BOLT,SHOULDER OUTBOARD,12-1.75 X 68MM.....	10
* 21	PAHZZ	5306011499668	7X677	14077192	.BOLT,SHOULDER OUTBOARD,12-1.75 X 68MM.....	4
22	PAHZZ	5306014382320	7X677	23502575	.BOLT,MACHINE INBOARD,#12-1.75 X 101MM.....	10
* 23	XAHZZ		7X677	23502571	.CAP,PILLOW BLOCK CRANKSHAFT BEARING NOS.1,2,4.....	3
* 24	XAHZZ		7X677	14022663	.CAP,PILLOW BLOCK CRANKSHAFT BEARING NO.3.....	1

(1) ITEM NO	(2) SMR CODE	(3) NSN	(4) CAGEC	(5) PART NUMBER	(6) DESCRIPTION AND USABLE ON CODES(UOC)	(7) QTY
* 25	PAHZZ	5306014862891	7X677	12552171	.BOLT,SHOULDER OUTBOARD M10-1.5 X 68MM.....	6
* 26	PAHZZ	4930014773638	7X677	12555504	.NOZLE,PISTO OIL SPRAY.....	8
* 27	PAFZZ	5315011499712	7X677	14022670	.PIN,STRAIGHT,HEADLE.....	2
* 28	PAHZZ	5340011497976	96906	MS9176-13	.PLUG,EXPANSION.....	2
* 29	PFHZZ	2815014562763	01RE3	SL195X	CYLINDER SLEEVE 6.5 LITER,1/16 INCH V WALL.....	
* 29	PFHZZ	2815014562772	01RE3	SL195	CYLINDER SLEEVE 6.5 LITER,3/32 INCH V WALL.....	
* 29	PFHZZ	2815014562774	01RE3	SL295	CYLINDER SLEEVE 6.5 LITER,1/8 INCH V WALL.....	
* 30	PAFZZ	5305015022933	1RGD4	14002104	SCREW,CAP,HEXAGON H.....	1
* 31	PAFZZ	4710015025609	34623	12553673	TUBE ASSEMBLY,METAL.....	1

END OF FIGURE

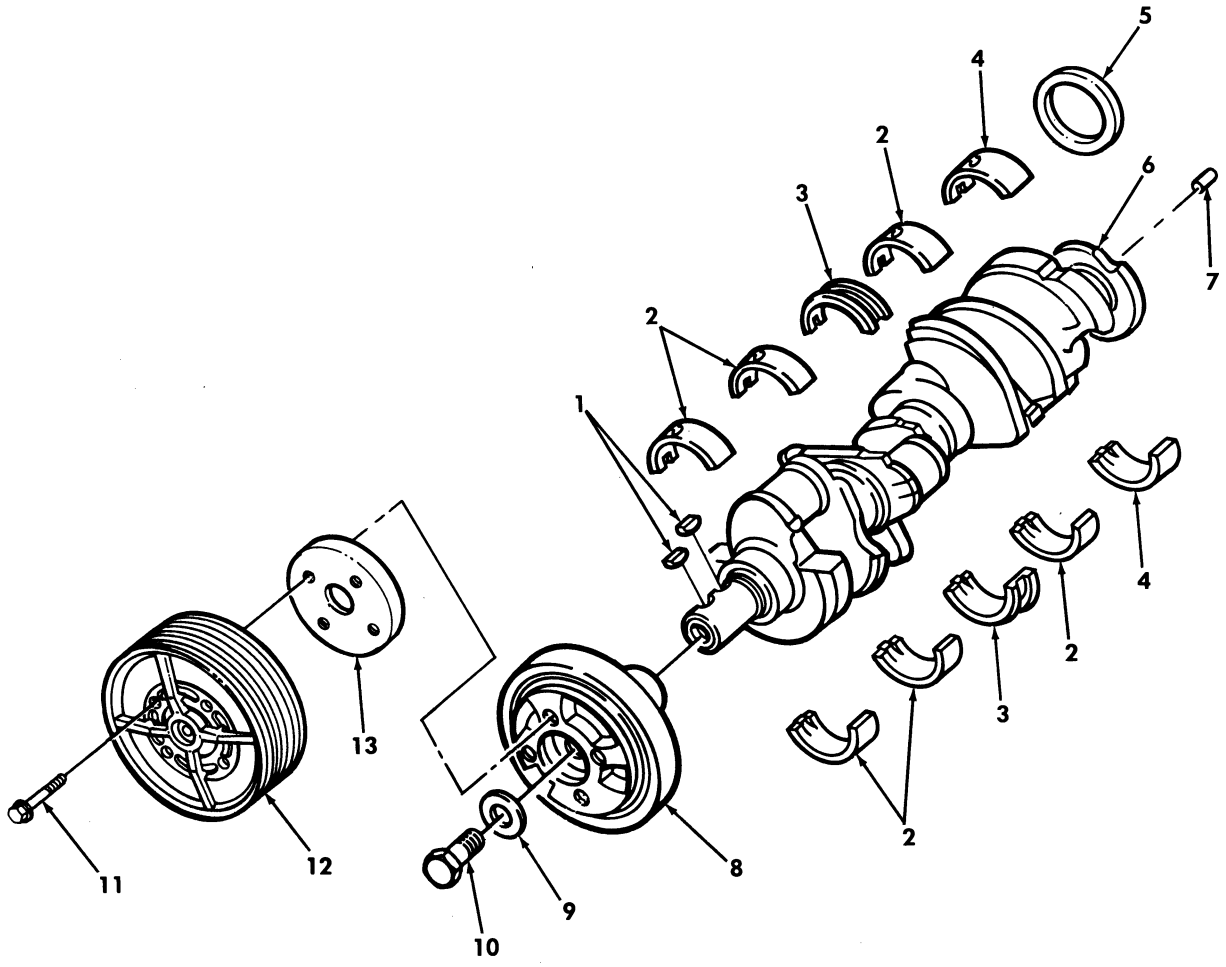

Figure 4. Crankshaft, Damper, Bearings, and Pulley.

(1) ITEM NO	(2) SMR CODE	(3) NSN	(4) CAGEC	(5) PART NUMBER	(6) DESCRIPTION AND USABLE ON CODES(UOC)	(7) QTY
					GROUP 0102 CRANKSHAFT	
					FIG. 4 CRANKSHAFT,DAMPER,BEARINGS, AND PULLEY	
* 1	PAFZZ	5315013049173	72582	8928543	KEY,SPECIAL.....	2
* 2	PAHZZ	3120011524239	7X677	18009096	BEARING,SLEEVE NOS 1,2,4,STANDARD 1996.....	3
* 2	PAHZZ	3120014593844	7X677	12531692	BEARING SET,SLEEVE NOS 1,2,4, STANDARD 1997 AND ABOVE.....	3
* 2	PAHZZ	3120011528201	7X677	12531702	BEARING,SLEEVE NOS 1,2,4,.013 MM UNDERSIZE 1996.....	3
* 2	PAHZZ	3120014773639	7X677	12531693	BEARING SET,SLEEVE NOS 1,2,4,.013 MM UNDERSIZE 1997 AND ABOVE.....	3
* 2	PAHZZ	3120011537545	7X677	18009098	BEARING,SLEEVE NOS 1,2,4,.026 MM UNDERSIZE 1996.....	3
* 2	PAHZZ	3110014773640	7X677	12531694	BALL,BEARING NOS 1,2,4,.026 MM UNDERSIZE 1997 AND ABOVE.....	3
* 3	PAHZZ	3120011522039	7X677	5740201	BEARING,SLEEVE NO 3,STANDARD 1996	1
* 3	PAHZZ	3110014773642	7X677	12531695	BALL,BEARING NO 3,STANDARD 1997 AND ABOVE.....	1
* 3	PAHZZ	3120011733728	7X677	14053400	BEARING,SLEEVE NO 3,.013 MM UNDERSIZE 1996.....	1
* 3	PAHZZ	3110014773645	7X677	12531696	BALL,BEARING NO 3,.013 MM UNDERSIZE 1997 AND ABOVE.....	1
* 3	PAHZZ	3120011753813	7X677	23500111	BEARING,SLEEVE NO 3,.026 MM UNDERSIZE 1996.....	1
* 3	PAHZZ	3110014773643	7X677	12531697	BALL.BEARING NO 3,.026 MM UNDERSIZE 1997 AND ABOVE.....	1
* 4	PAHZZ	3120011521989	7X677	14055002	BEARING,SLEEVE NO 5,STANDARD 1996	1
* 4	PAHZZ	3110014773644	7X677	12531698	BALL,BEARING NO 5,STANDARD 1997 AND ABOVE.....	1
* 4	PAHZZ	3120011773064	7X677	14055003	BEARING,SLEEVE NO 5,.013 MM UNDERSIZE 1996.....	1
* 4	PAHZZ	3110014773646	7X677	12531699	BALL,BEARING NO 5,.013 MM UNDERSIZE 1997 AND ABOVE.....	1
* 4	PAHZZ	3120011817938	7X677	14055004	BEARING,SLEEVE NO 5,.026 MM UNDERSIZE 1996.....	1
* 4	PAHZZ	3110014773647	7X677	12531700	BALL,BEARING NO 5,.026 MM UNDERSIZE 1997 AND ABOVE.....	1
5	PAFZZ	5330013788577	7X677	23503969	SEAL,PLAIN REAR MAIN,6.5 LITER PART OF KIT P/N 12514591-RB-12532530.....	1
6	PAHZZ	2815014113964	7X677	23502596	CRANKSHAFT,ENGINE 6.5 LITER.....	1
7	PAHZZ	5315011496533	7X677	3701679	PIN,STRAIGHT HEADLE.....	1
8	PAFZZ	2815014112138	7X677	10154688	DAMPENER,VIBRATION 6.5 LITER.....	1
9	PAFZZ	5310011478744	7X677	23504011	WASHER,FLAT 16.5 MM.....	1
10	PAFZZ	5305011483686	7X677	14022672	SCREW,CAP HEXAGON H 16-1.5 X 50 MM.	1
11	PAFZZ	5305013601136	73342	11505328	SCREW,CAP HEXAGON H #10-1.5 X 90 MM.	4
* 12	PAFZZ	3020014427485	34623	RCSK17749	PULLEY ASSEMBLY,ISO.....	1
* 13	PAFZZ	5365014557545	34623	RCSK17748	SPACER,RING.....	1
					END OF FIGURE	

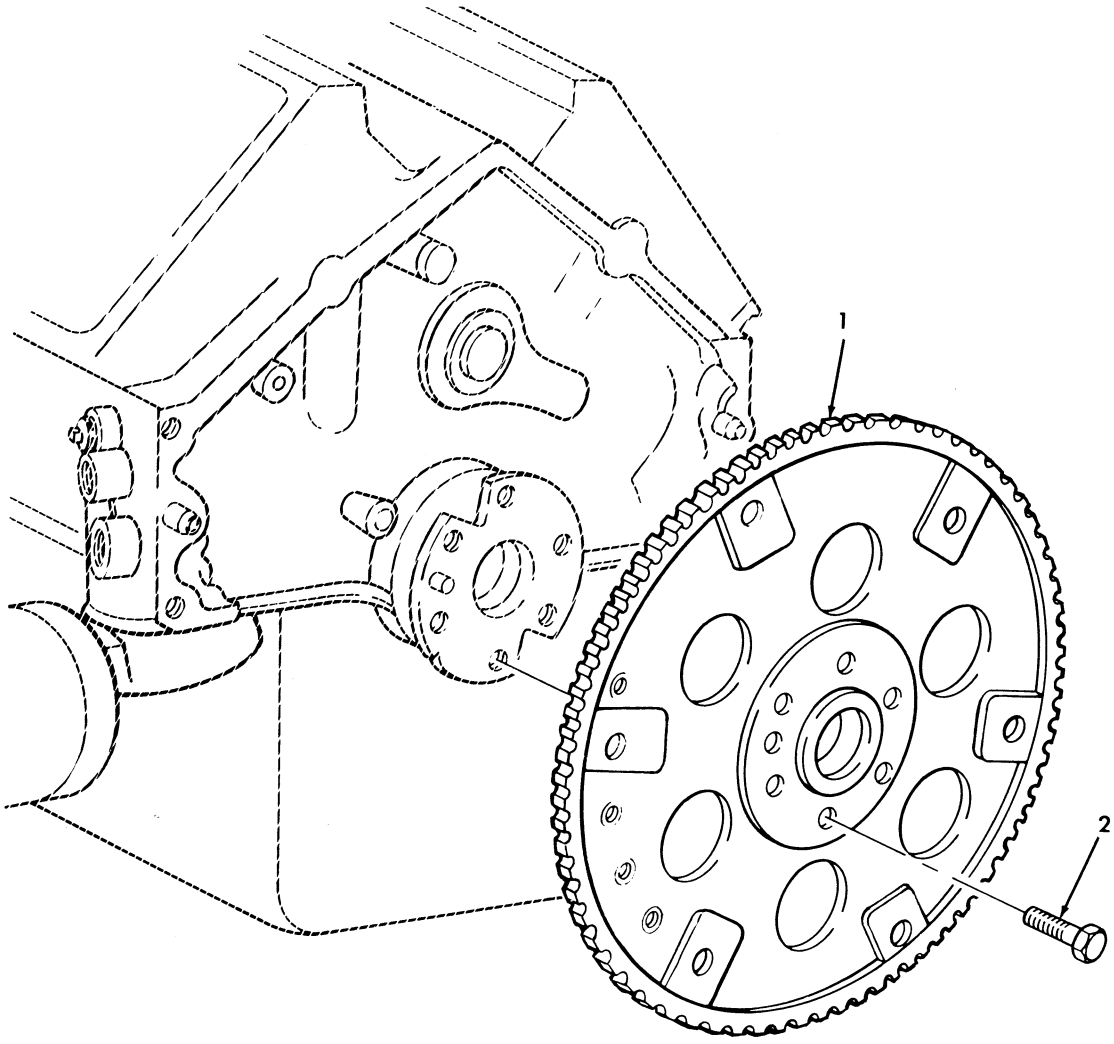

Figure 5. Flywheel.

(1) ITEM NO	(2) SMR CODE	(3) NSN	(4) CAGEC	(5) PART NUMBER	(6) DESCRIPTION AND USABLE ON CODES(UOC)	(7) QTY
					GROUP 0103 FLYWHEEL ASSEMBLY	
					FIG. 5 FLYWHEEL	
1	PAFZZ	2815011483771	7X677	14077157	FLYWHEEL,ENGINE.....	1
2	PAFZZ	5306011488198	7X677	3727207	BOLT,MACHINE 7/16-20 X .70.....	6

END OF FIGURE

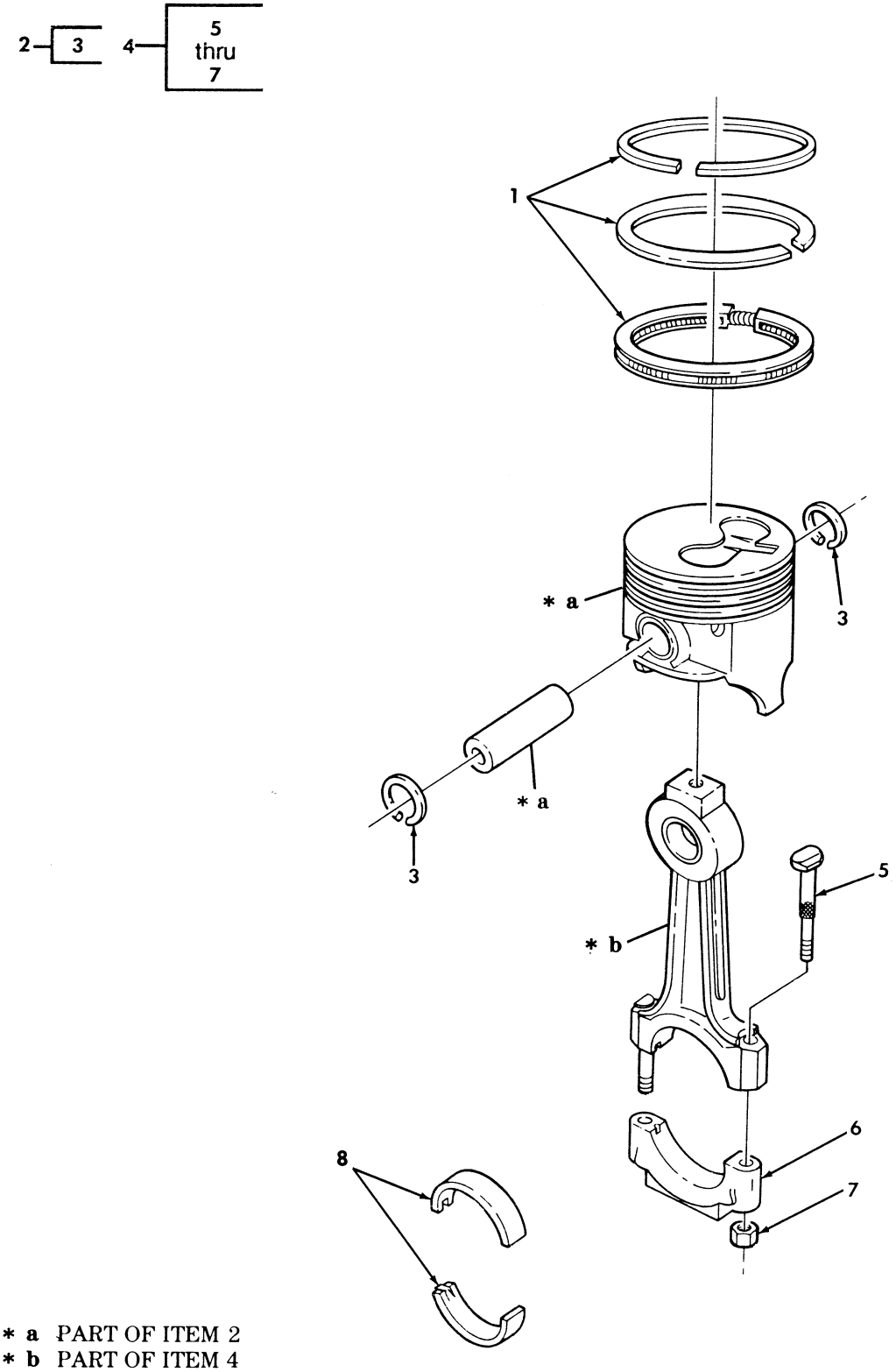

* a PART OF ITEM 2
* b PART OF ITEM 4

Figure 6. Piston Assembly, Rod Assembly, and Ring Set.

(1) ITEM NO	(2) SMR CODE	(3) NSN	(4) CAGEC	(5) PART NUMBER	(6) DESCRIPTION AND USABLE ON CODES(UOC)	(7) QTY
					GROUP 0104 PISTON,CONNECTING RODS	
					FIG. 6 PISTON ASSEMBLY,ROD ASSEMBLY, AND RING SET	
1	PAHZZ	2815013991020	7X677	12369198	RING SET,PISTON 6.5 LITER,STANDARD.	8
1	PAHZZ	2815014126760	7X677	12369199	RING SET,PISTON 6.5 LITER,.50 MM OVERSIZE.....	8
2	PAHZZ	2815014128161	7X677	12550059	PISTON,INTERNAL COM 6.5 LITER, STANDARD.....	8
2	PAHZZ	2815014128162	7X677	12550062	PISTON,INTERNAL COM 6.5 LITER,.50 MM OVERSIZE.....	8
3	PAHZZ	5325012340447	7X677	23500298	.RING,RETAINING.....	2
4	PAHZZ	2815011502198	7X677	14025523	CONNECTING ROD,PIST.....	8
5	PAHZZ	5306011652425	7X677	14025526	.BOLT,MACHINE.....	2
6	XBHZZ		7X677	14025525	.CAP,CONNECTING ROD.....	1
7	PAHZZ	5310011653333	7X677	14025527	.NUT,PLAIN,HEXAGON.....	2
8	PAHZZ	3120011553517	7X677	12517006	BEARING HALF,SLEEVE STANDARD.....	8
8	PAHZZ	3120011654826	7X677	18009095	BEARING HALF SET,SL .026 MM UNDERSIZE.....	8

END OF FIGURE

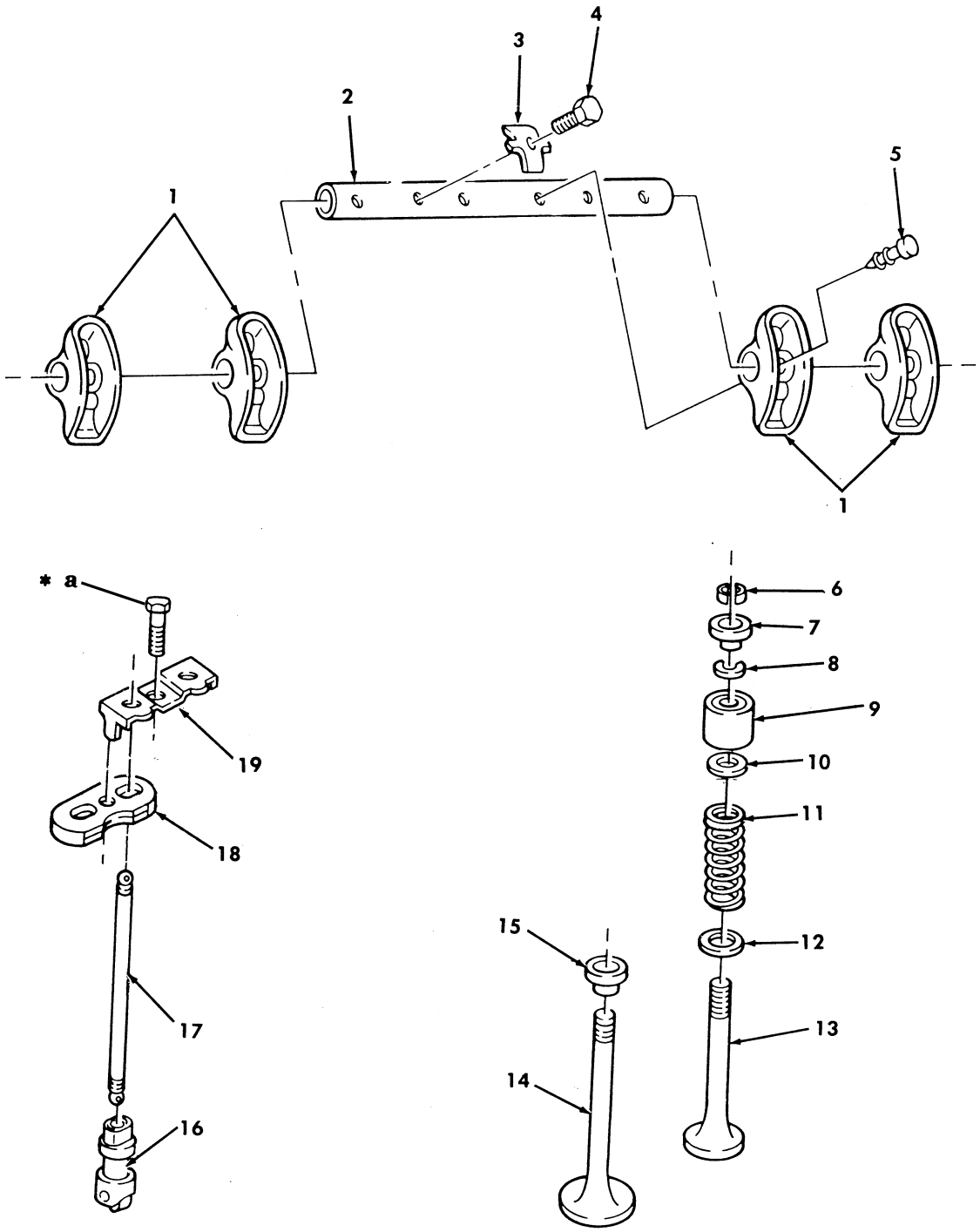

* a PART OF ITEM 19

Figure 7. Valves, Guides, and Rocker Arm Assemblies.

(1) ITEM NO	(2) SMR CODE	(3) NSN	(4) CAGEC	(5) PART NUMBER	(6) DESCRIPTION AND USABLE ON CODES(UOC)	(7) QTY
					GROUP 0105 VALVES,CAMSHAFTS,AND TIMING SYSTEM	
					FIG. 7 VALVES,GUIDES,AND ROCKER ARM ASSEMBLIES	
1	PAFZZ	2815011489540	7X677	23500074	ROCKER ARM,ENGINE P.....	16
2	PAFZZ	3040011924466	7X677	23500075	SHAFT,STRAIGHT.....	4
3	PAFZZ	2815011726780	7X677	14057296	RETAINER,ROCKER SHA.....	8
4	PAFZZ	5306011494395	7X677	11508355	WASHER,FLAT 10-1.5 X 50 MM.....	8
5	PAFZZ	3040012127616	7X677	23500076	RETAINER,ROCKER ARM.....	16
6	PAHZZ	2805001557266	7X677	3947770	LOCK,VALVE SPRING R.....	32
7	PAHZZ	2805001557263	7X677	14042575	ROTOR,ENGINE POPPET.....	8
* 8	PAHZZ	2805007520158	11862	3835333	SEAL INLET PART OF KIT P/N 12456409.	16
9	PAHZZ	5365011541484	7X677	14025515	SPACER,SLEEVE.....	16
* 10	PAHZZ	5330013157047	7X677	23502552	SEAL,PLAIN EXHAUST VALVE PART OF KIT P/N 12456409.....	8
11	PAHZZ	5360011757269	7X677	14025512	SPRING.....	16
12	PAHZZ	5310011576773	7X677	12337836	WASHER,FLAT.....	16
13	PAHZZ	2815013988487	7X677	10149663	VALVE,POPPET,ENGINE 6.5 LITER, EXHAUST,STANDARD.....	8
13	PAHZZ	2815014113965	7X677	10154626	VALVE,POPPET,ENGINE 6.5 LITER, EXHAUST,.089 MM OVERSIZE.....	8
14	PAHZZ	2815011637189	7X677	14033927	VALVE,POPPET,ENGINE INTAKE,STANDARD	8
14	PAHZZ	2815011637190	7X677	14050658	VALVE,POPPET,ENGINE INTAKE,.089 MM OVERSIZE.....	8
15	PAHZZ	2805011422631	7X677	14003974	CAP,ENGINE POPPET V.....	8
16	PAFZZ	2815011479358	7X677	5234530	TAPPET,ENGINE POPPE.....	16
17	PAFZZ	2815011500673	7X677	23503994	PUSH ROD,ENGINE POP.....	16
* 18	PAFZZ	2815011474200	7X677	12560960	PLATE,VALVE LIFTER.....	8
19	PAFZZ	2815011474201	7X677	14022640	CLAMP,VALVE LIFTER.....	8

END OF FIGURE

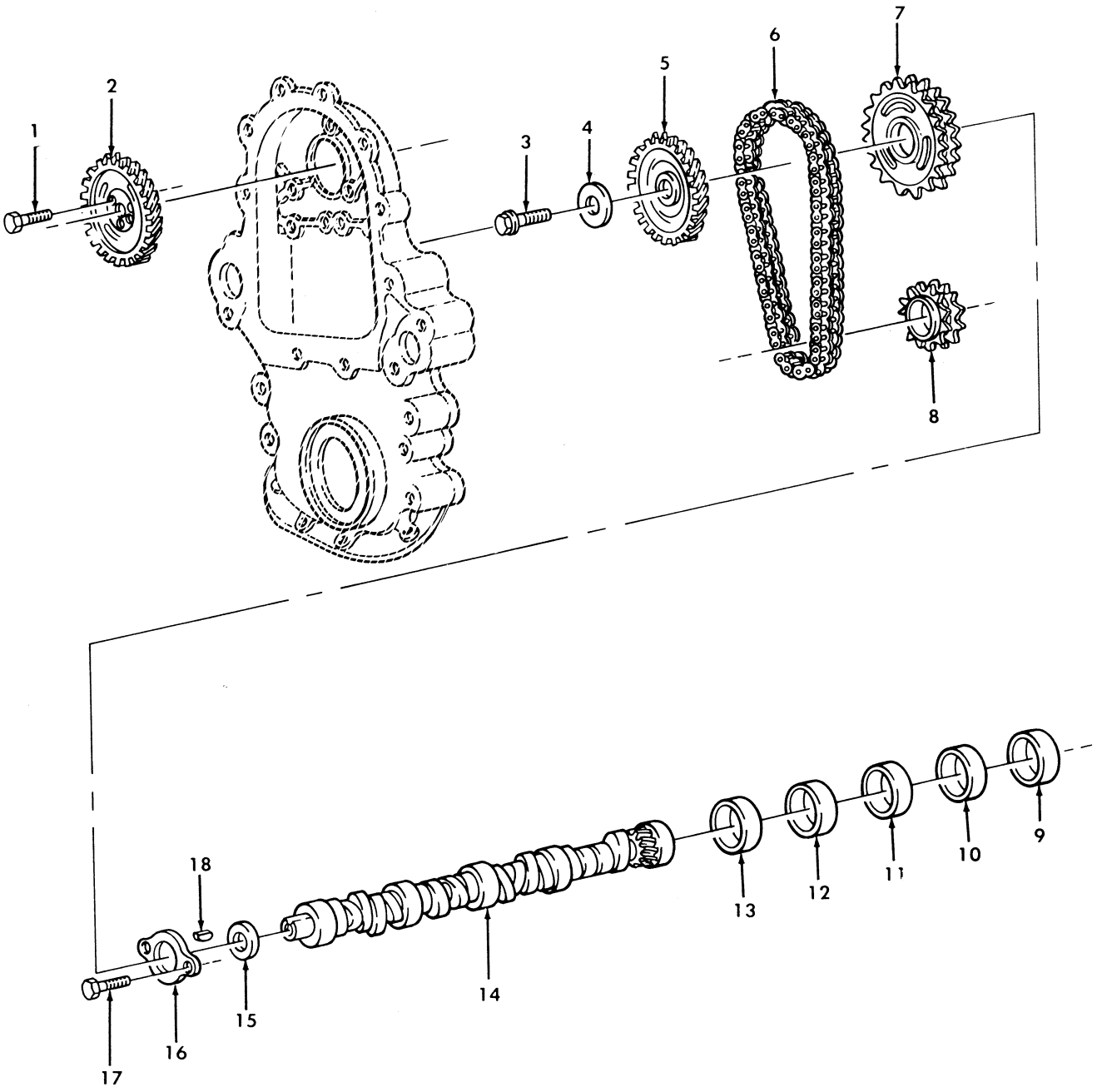

Figure 8. Camshaft, Timing Chain, and Related Parts.

(1) ITEM NO	(2) SMR CODE	(3) NSN	(4) CAGEC	(5) PART NUMBER	(6) DESCRIPTION AND USABLE ON CODES(UOC)	(7) QTY
					GROUP 0105 VALVES,CAMSHAFTS,AND TIMING SYSTEM	
					FIG. 8 CAMSHAFT,TIMING CHAIN,AND RELATED PARTS	
1	PAFZZ	5305011627885	7X677	25534835	SCREW,ASSEMBLED WAS.....	3
2	PAFZZ	3020011488846	7X677	14022652	GEAR,HELICAL.....	1
3	PAFZZ	5305011505895	24617	11503316	SCREW,CAP,HEXAGON H 12-1.75 X 40MM.	1
* 4	PAFZZ	5310011490870	7X677	14022648	WASHER,FLAT 10-1.5 X 50 MM.....	1
5	PAFZZ	3020011489547	7X677	14022653	GEAR,HELICAL.....	1
6	PAFZZ	3020011555779	7X677	14022647	CHAIN,ROLLER.....	1
7	PAFZZ	3020011495915	7X677	14022645	SPROCKET WHEEL.....	1
8	PAFZZ	3020014255380	7X677	10154689	SPROCKET WHEEL 6.5 LITER.....	1
9	PAHZZ	3120011525946	7X677	14048457	BEARING,SLEEVE NO.5,ORANGE PART OF KIT P/N 1496M.....	1
10	PAHZZ	3120011570914	7X677	14048456	BEARING,SLEEVE NO.4,GREEN PART OF KIT P/N 1496M.....	1
11	PAHZZ	3120011528200	7X677	14048455	BEARING,SLEEVE NO.3,YELLOW PART OF KIT P/N 1496M.....	1
12	PAHZZ	3120011525945	7X677	14048454	BEARING,SLEEVE NO.2,PINK PART OF KIT P/N 1496M.....	1
13	PAHZZ	3120014178084	0B0B1	SH1366S	PARTS KIT,BEARING R NO.1,PLAIN PART OF KIT P/N 1496M.....	1
14	PAHZZ	2815011486971	7X677	14066308	CAMSHAFT,ENGINE.....	1
15	PAHZZ	5365011501386	7X677	14022643	SPACER,RING.....	1
16	PAHZZ	3120011522612	7X677	14022644	BEARING,WASHER,THRU.....	1
17	PAHZZ	5305011491938	7X677	11500815	SCREW,CAP,HEXAGON H 6.5 LITER,8-1.25 X 16MM.....	2
18	PAFZZ	5315003935865	7X677	106751	KEY,SEA WATER PUMP.....	1

END OF FIGURE

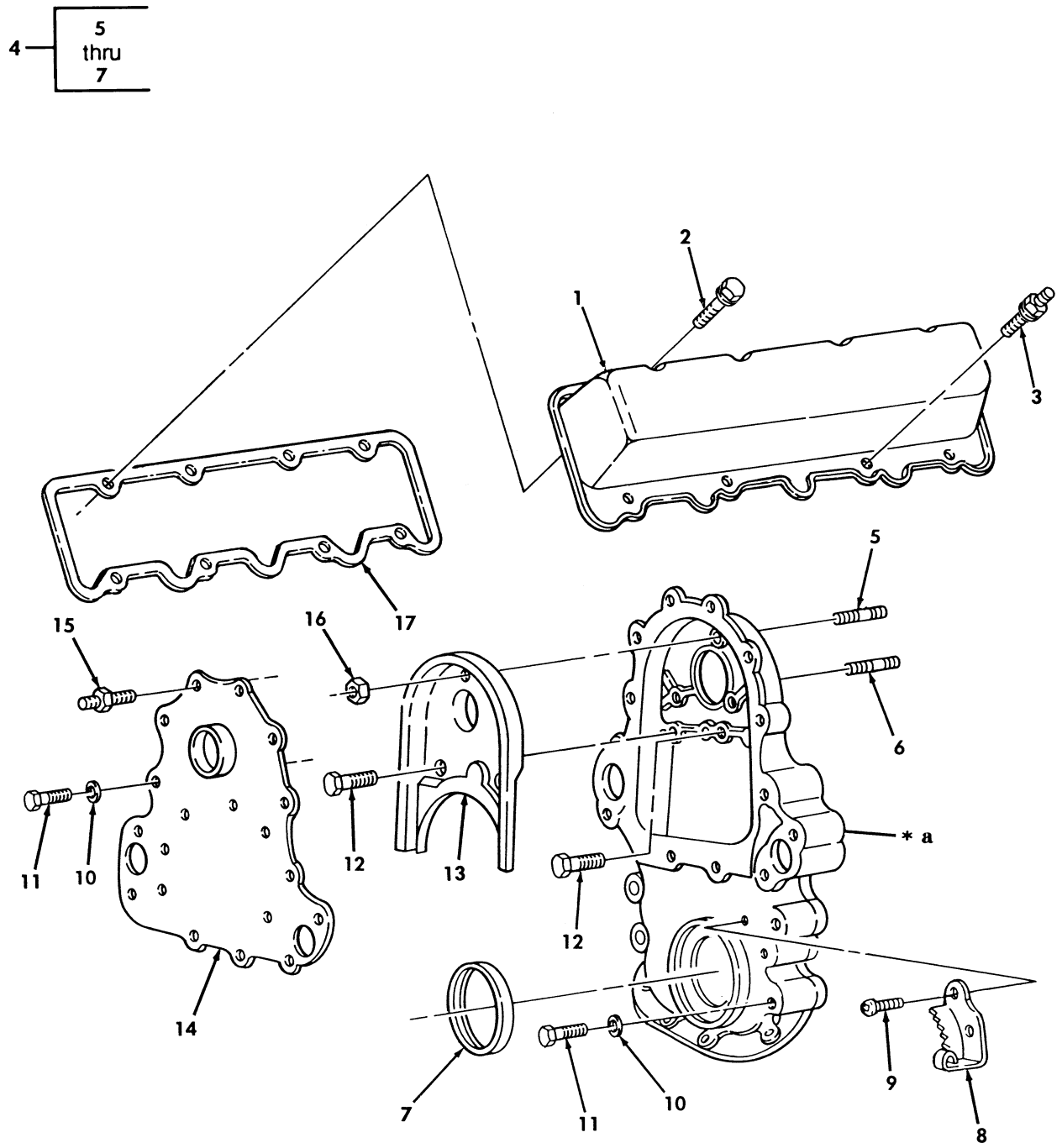

* a PART OF ITEM 4

Figure 9. Crankcase Cover Assembly and Rocker Cover.

(1) ITEM NO	(2) SMR CODE	(3) NSN	(4) CAGEC	(5) PART NUMBER	(6) DESCRIPTION AND USABLE ON CODES(UOC)	(7) QTY
					GROUP 0105 VALVES,CAMSHAFTS,AND TIMING SYSTEM	
					FIG. 9 CRANKCASE COVER ASSEMBLY AND ROCKER COVER	
1	PFFZZ	2815011489533	7X677	12564564	COVER,ENGINE POPPET.....	2
* 2	PAFZZ	5306011494398	7X677	11500914	BOLT,MACHINE 8-1.25 X 12MM.....	6
* 3	PAFZZ	5307011549586	7X677	14033818	STUD,SHOULDERED 8-1.25 X 1 X 12 MM.	10
* 4	PAFZZ	5340014131776	7X677	10222654	COVER,ACCESS 6.5LITER ENGINE.....	1
* 5	PAFZZ	5307011884684	7X677	10024396	.STUD,PLAIN.....	1
* 6	PAFZZ	5307011505993	7X677	22548601	.STUD,PLAIN 10-1.5 X 45.5.....	2
* 7	PAFZZ	5330013983777	7X677	10191640	.SEAL,PLAIN ENCASED 6.5 LITER ENGINE PART OF KIT P/N 12514591-RB-12532530.....	1
* 8	PAFZZ	2990014117898	7X677	10154638	INDICATOR,TIMING,EN.....	1
* 9	PAFZZ	5305011646320	7X677	14003948	SCREW,MACHINE.....	2
* 10	PAFZZ	5310000806004	96906	MS27183-14	WASHER,FLAT 13/32.....	4
* 11	PAFZZ	5305011487464	24617	11504038	SCREW,CAP,HEXAGON H 10-1.5 X 55MM..	4
* 12	PAFZZ	5306011496280	7X677	1635490	BOLT,SELF-LOCKING 10-1.5 X 30MM....	3
* 13	PAFZZ	2815011486966	7X677	14033820	BAFFLE,CRANKCASE,VE.....	1
* 14	PAFZZ	2990014116556	7X677	23500805	MOUNTING PLATE,ENGI 6.5 LITER ENGINE.....	1
* 15	PAFZZ	5307011501549	7X677	14045263	STUD,SHOULDERED 8-1.25 X 25 X 16.75MM.....	3
* 16	PAFZZ	5310011552503	7X677	11503639	NUT,PLAIN,HEXAGON 10-1.5 MM.....	1
* 17	PAFZZ	5330013720636	73165	91599	GASKET.....	2

END OF FIGURE

2 — 3

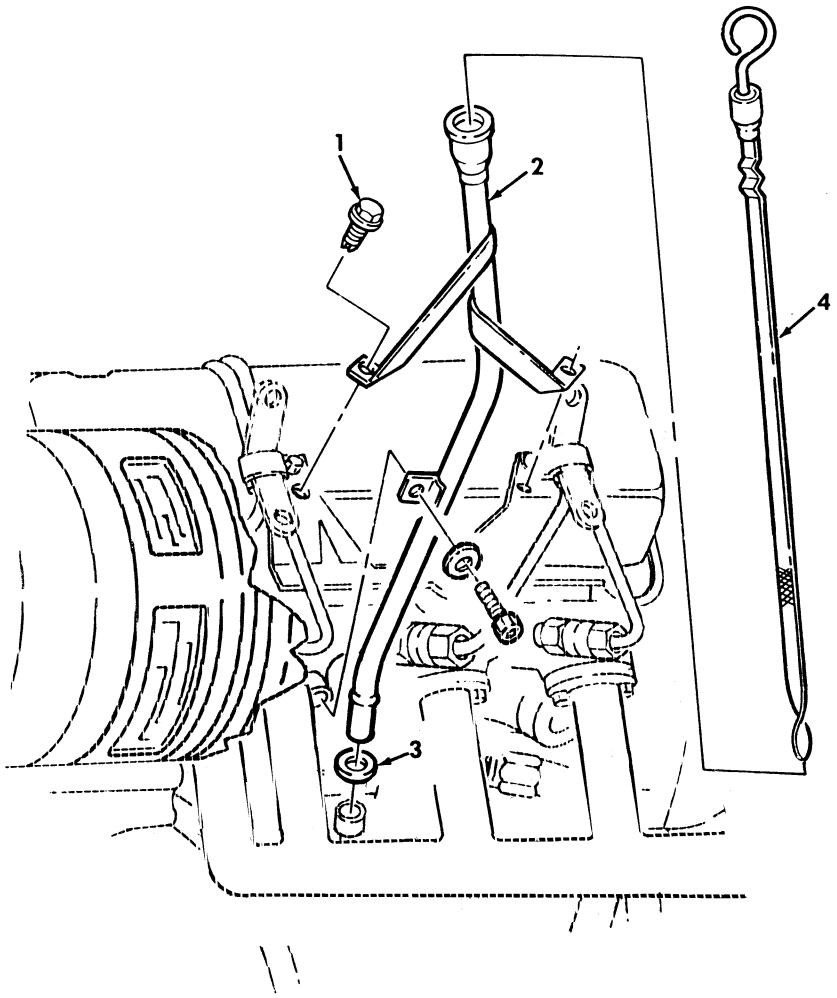

Figure 10. Engine Oil Dipstick and Tube Assembly.

(1) ITEM NO	(2) SMR CODE	(3) NSN	(4) CAGEC	(5) PART NUMBER	(6) DESCRIPTION AND USABLE ON CODES(UOC)	(7) QTY
					GROUP 0106 ENGINE LUBRICATION SYSTEM	
					FIG. 10 ENGINE OIL DIPSTICK AND TUBE ASSEMBLY	
1	PAOZZ	5305012155174	19207	12340515	SCREW,ASSEMBLED WAS 4.2-1.41 X 13 MM.....	2
* 2	PFOZZ	4710014329470	19207	12469132	TUBE,BENT METALLIC.....	1
* 3	PAOZZ	5331009359136	24617	274244	.O-RING.....	1
* 4	PAOZZ	6680014773650	34623	6002645	GAGE ROD-CAP LIQUID.....	1

END OF FIGURE

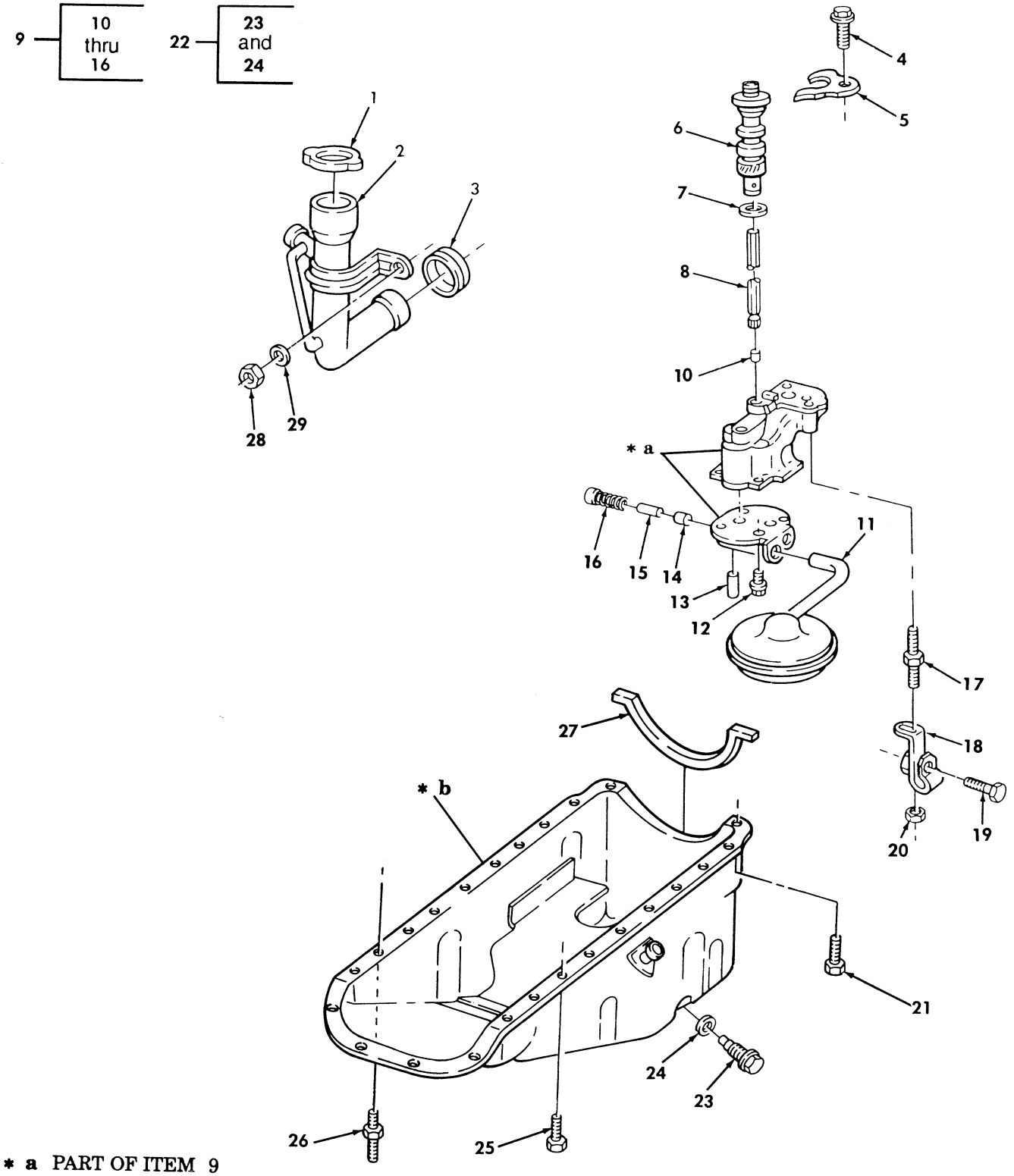

* a PART OF ITEM 9
* b PART OF ITEM 22

Figure 11. Engine Oil Pan, Pump, and Filler Tube.

(1) ITEM NO	(2) SMR CODE	(3) NSN	(4) CAGEC	(5) PART NUMBER	(6) DESCRIPTION AND USABLE ON CODES(UOC)	(7) QTY
					GROUP 0106 ENGINE LUBRICATION SYSTEM	
					FIG. 11 ENGINE OIL PAN,PUMP,AND FILLER TUBE	
1	PAOZZ	2590011965228	19207	12339358	CAP,FILLER OPENING.....	1
2	PAOZZ	2590011474285	7X677	14071059	FILLER NECK.....	1
3	PAOZZ	5325011516117	7X677	14028942	GROMMET,NONMETALLIC.....	1
4	PAFZZ	5306012434650	7X677	11504596	BOLT,MACHINE 10-1.5 X 25 MM.....	1
5	PAFZZ	5342011604397	7X677	14022650	CLAMP.....	1
6	PAFZZ	2815014807632	7X677	26045801	DRIVE SHAFT ASSEMBL.....	1
7	PAFZZ	5330011565147	7X677	14022649	GASKET PART OF KIT P/N 12514591-RB-12532530.....	1
8	PAFZZ	3040011637208	7X677	14022699	SHAFT,STRAIGHT.....	1
9	PAFFF	2518011687871	72582	23502073	PUMP AND SCREEN,OIL 1996.....	1
* 9	PAFFF	2815015122230	7X677	12567769	OIL PUMP ASSEMBLY,E 1997 AND ABOVE.	1
10	PAFZZ	5330011547159	7X677	477249	.RETAINER,PACKING.....	1
11	PAFZZ	2910011898851	7X677	23500008	.STRAINER ELEMENT,SE USE WITH P/N 23502073,1996.....	1
11	PAFZZ	4730014933828	7X677	12559800	.STRAINER ELEMENT,SE USE WITH P/N 12567769,1997 AND ABOVE.....	1
12	PAFZZ	5306011655582	7X677	11508600	.BOLT,MACHINE 6-1.0 X 20 MM.....	4
13	PAFZZ	5315008285487	73957	3-32X3-4LG	.PIN,GROOVED,HEADLES.....	1
14	PAFZZ	5340011945294	7X677	3704871	.DISK,SOLID,PLAIN.....	1
15	PAFZZ	2805003361716	7X677	3702366	.VALVE,RELIEF,PRESSU.....	1
* 16	PAFZZ	5360011651563	7X677	10044435	.SPRING,HELICAL,COMP.....	1
17	PAFZZ	5307011870519	7X677	23500006	STUD,SHOULDERED AND 11-1.5 X 66 MM.	1
18	PAFZZ	5340013849987	34623	5741613	CLAMP,LOOP USE WITH P/N 23502073, 1996.....	1
18	PAFZZ	5340014932569	7X677	12559801	BRACKET USE WITH P/N 12567769,1997 AND ABOVE.....	1
19	PAFZZ	5306012537073	7X677	11508353	BOLT,MACHINE 8-1.25 X 30 MM.....	1
20	PAFZZ	5310012507679	72582	23521131	NUT 11-1.5 MM.....	1
21	PAOZZ	5306012303354	7X677	11508534	BOLT,MACHINE 8-1.25 X 16MM.....	2
22	PAOFF	2815014302599	7X677	12551755	OIL PAN.....	1
23	PAOZZ	5365013781755	72582	29505789	.PLUG,MACHINE THREAD.....	1
* 24	PAOZZ	5330013883686	81343	MS35769-9	.GASKET.....	1
25	PAOZZ	5305011509781	7X677	8639743	SCREW,CAP,HEXAGON H 6-1.0 X 16MM...	20
26	PAOZZ	5307011505992	7X677	14066307	STUD,SHOULDER.....	2
27	PAOZZ	5330013788572	7X677	23502587	RETAINER,OIL SEAL.....	1
28	PAOZZ	5310011653331	7X677	11500749	NUT,PLAIN,HEXAGON 8-1.25 MM.....	2
29	PAOZZ	5310008093078	96906	MS27183-11	WASHER,FLAT 1/4.....	2

END OF FIGURE

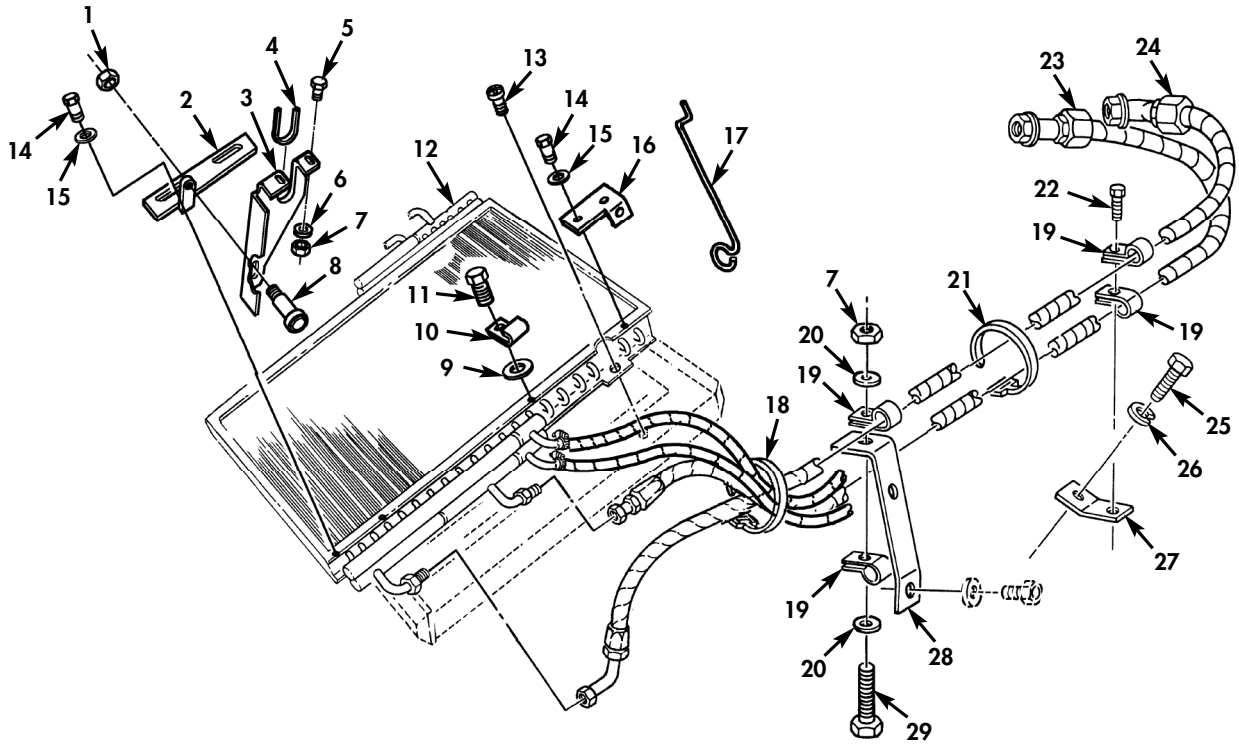

Figure 12. Engine, Power Steering, Transmission Oil Cooler Lines, and Related Parts (Serial Number 299999 and Below).

(1) ITEM NO	(2) SMR CODE	(3) NSN	(4) CAGEC	(5) PART NUMBER	(6) DESCRIPTION AND USABLE ON CODES(UOC)	(7) QTY
					GROUP 0106 ENGINE LUBRICATION SYSTEM	
					FIG. 12 ENGINE,POWER STEERING, TRANSMISSION OIL COOLER LINES, AND RELATED PARTS (SERIAL NUMBER 299999 AND BELOW)	
* 1	PAOZZ	5310013980319	24617	9424215	NUT,SELF-LOCKING,HE 1/4-20..... UOC:TTT,UUU,UU1,XAA,XBB	2
* 2	PAOZA	5340014753480	34623	RCSK18417	BRACKET,ANGLE L.H..... UOC:TTT,UUU,UU1,XAA,XBB	1
* 2	PAOZA	5340014753485	34623	RCSK18416	BRACKET,ANGLE R.H..... UOC:TTT,UUU,UU1,XAA,XBB	1
* 3	PAOZZ	5342014756655	34623	EX4617-1	BRACKET,ENGINE ACCE R.H..... UOC:TTT,UUU,UU1,XAA,XBB	1
* 3	PAOZZ	5342014756643	34623	EX4617	BRACKET,ENGINE ACCE L.H..... UOC:TTT,UUU,UU1,XAA,XBB	1
* 4	PAOZZ	5342012749884	34623	5597890	BUMPER,SPECIAL..... UOC:TTT,UUU,UU1,XAA,XBB	2
* 5	PAOZZ	5305009543937	80205	MS35190-290	SCREW,MACHINE..... UOC:TTT,UUU,UU1,XAA,XBB	4
* 6	PAOZZ	5310011023270	24617	2436161	WASHER,FLAT..... UOC:TTT,UUU,UU1,XAA,XBB	4
* 7	PAOZZ	5310000614650	96906	M45913/3-4CG8C	NUT,SELF-LOCKING,HE 1/4-20..... UOC:TTT,UUU,UU1,XAA,XBB	5
* 8	PAOZZ	5305009143818	80205	MS51975-8	SCREW,SHOULDER..... UOC:TTT,UUU,UU1,XAA,XBB	2
* 9	PAOZZ	5365014747490	34623	RCSK18415	SPACER,RING..... UOC:TTT,UUU,UU1,XAA,XBB	1
* 10	PAOZZ	5340014753464	34623	RCSK18418	CLIP,SPRING TENSION..... UOC:TTT,UUU,UU1,XAA,XBB	1
* 11	PAOZZ	5305000687837	80204	B1821BH025C063N	SCREW,CAP,HEXAGON H..... UOC:TTT,UUU,UU1,XAA,XBB	1
* 12	PAOFF	2930014332550	34623	RCSK17277	COOLER,LUBRICATING..... UOC:TTT,UUU,UU1,XAA,XBB	1
* 13	PAOZZ	5305009409445	96906	MS51975-23	SCREW,SHOULDERED 5/16-18 X 2.00.... UOC:TTT,UUU,UU1,XAA,XBB	4
* 14	PAOZZ	5306014752270	24617	9430397	BOLT,MACHINE..... UOC:TTT,UUU,UU1,XAA,XBB	6
* 15	PAOZZ	5310008094058	96906	MS27183-10	WASHER,FLAT..... UOC:TTT,UUU,UU1,XAA,XBB	6
* 16	PAOZZ	5340014755065	34623	RCSK18419	BRACKET,ANGLE..... UOC:TTT,UUU,UU1,XAA,XBB	1
* 17	PAOZZ	2510015603958	19207	12469376	ROD,SUPPORT OIL COOLER..... UOC:TTT,UUU,UU1,XAA,XBB	1
* 18	PAOZZ	5975009856630	96906	MS3367-3-0	STRAP,TIEDOWN,ELECT..... UOC:TTT,UUU,UU1,XAA,XBB	7
* 19	PAOZZ	5340012293632	75272	COV-1609	CLAMP,LOOP..... UOC:TTT,UUU,UU1,XAA,XBB	4
* 20	PAOZZ	5310008238804	96906	MS27183-9	WASHER,FLAT 1/4..... UOC:TTT,UUU,UU1,XAA,XBB	2
* 21	PAOZZ	5975004515001	96906	MS3367-3-9	STRAP,TIEDOWN,ELECT..... UOC:TTT,UUU,UU1,XAA,XBB	1
* 22	PAOZZ	5305001913640	96906	MS51851-85	SCREW,TAPPING 3/8-16 X 1.25..... UOC:TTT,UUU,UU1,XAA,XBB	1

(1) ITEM NO	(2) SMR CODE	(3) NSN	(4) CAGEC	(5) PART NUMBER	(6) DESCRIPTION AND USABLE ON CODES(UOC)	(7) QTY
* 23	PAOZZ	4720014576586	34623	RCSK17579-3	HOSE ASSEMBLY,NONME 55.25 INCHES LONG..... UOC:TTT,UUU,UU1,XAA,XBB	1
* 24	PAOZZ	4720014467223	34623	RCSK17579-2	HOSE ASSEMBLY,NONME INLET,65.75 INCHES LONG..... UOC:TTT,UUU,UU1,XAA,XBB	1
* 25	PAOZZ	5305000518605	80205	MS16995-77	SCREW,CAP,SOCKET HE 3/8-16 X 3/4... UOC:TTT,UUU,UU1,XAA,XBB	1
* 26	PAOZZ	5310006379541	96906	MS35338-46	WASHER,LOCK 3/8..... UOC:TTT,UUU,UU1,XAA,XBB	1
* 27	PFOZZ	5340012124714	19207	12338777	BRACKET,ANGLE..... UOC:TTT,UUU,UU1,XAA,XBB	1
* 28	PFOZZ	5340012102747	19207	12338779	BRACKET,OIL COOLER..... UOC:TTT,UUU,UU1,XAA,XBB	1
* 29	PAOZZ	5305000680509	80204	B1821BH025C125N	SCREW,CAP,HEXAGON H 1/4-20 X 1.25.. UOC:TTT,UUU,UU1,XAA,XBB	1

END OF FIGURE

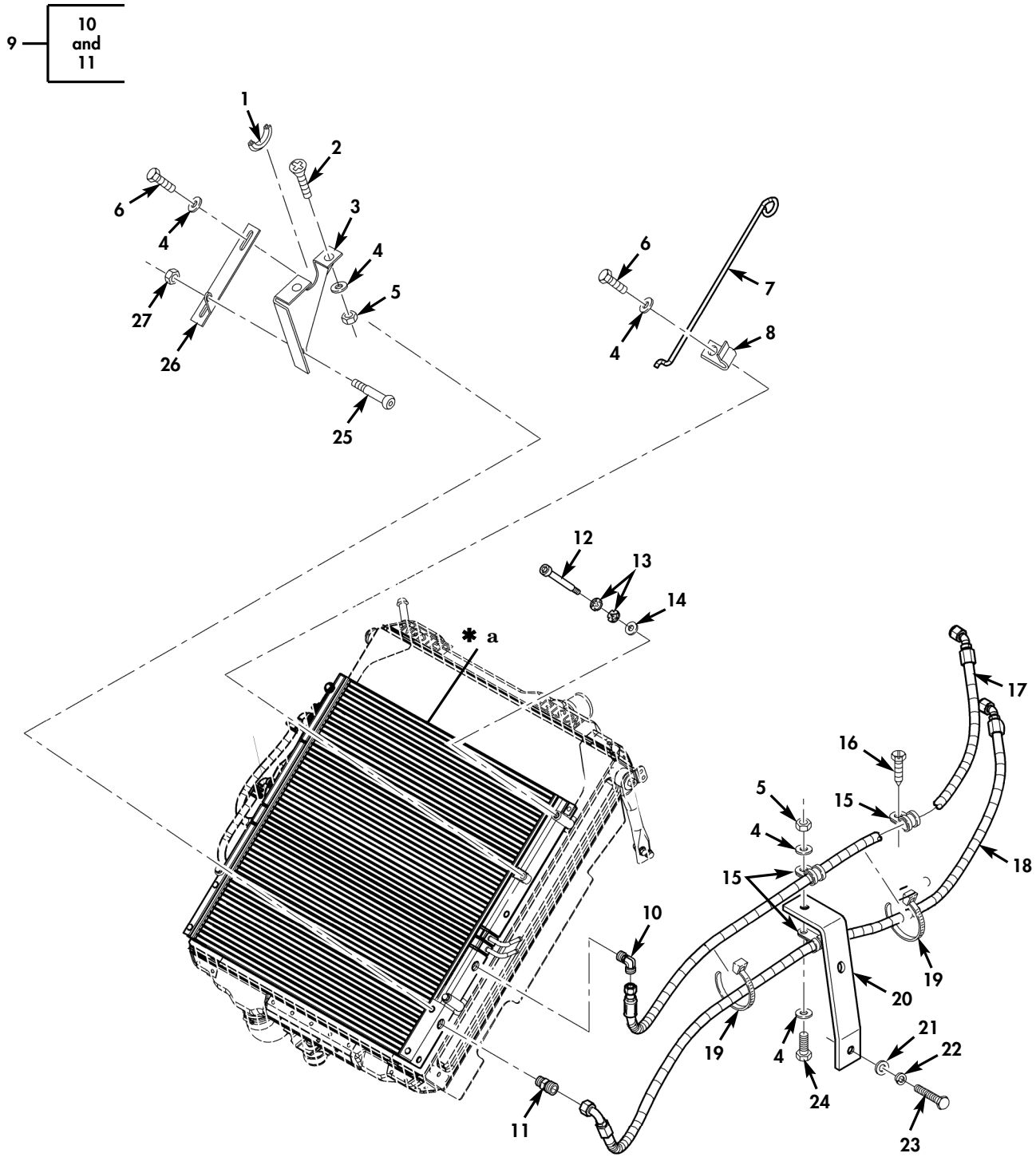

✱ **a** PART OF ITEM 9

Figure 12A. Engine, Power Steering, Transmission Oil Cooler, Engine Oil Cooler Lines, and Related Parts (Serial Number 300000 and Above).

(1) ITEM NO	(2) SMR CODE	(3) NSN	(4) CAGEC	(5) PART NUMBER	(6) DESCRIPTION AND USABLE ON CODES(UOC)	(7) QTY
					GROUP 0106 ENGINE LUBRICATION SYSTEM	
					FIG. 12A ENGINE,POWER STEERING, TRANSMISSION OIL COOLER,ENGINE OIL COOLER LINES,AND RELATED PARTS (SERIAL NUMBER 300000 AND ABOVE)	
* 1	PAOZZ	5342012749884	34623	5597890	PROTECTOR,EDGE..... UOC:TTA,TTT,TT1,UUA,UUU,UU1,UU2	2
* 2	PAOZZ	5305009543937	80205	MS35190-290	SCREW,MACHINE 1/4-20 X 7/8..... UOC:TTA,TTT,TT1,UUA,UUU,UU1,UU2	4
* 3	PAOZZ	5342015657602	34623	6038851	BRACKET,ENGINE ACCE L.H..... UOC:TTA,TTT,TT1,UUA,UUU,UU1,UU2	1
* 3	PAOZZ	5342015657609	34623	6038852	BRACKET,ENGINE ACCE R.H..... UOC:TTA,TTT,TT1,UUA,UUU,UU1,UU2	1
* 4	PAOZZ	5310011023270	34623	2436161	WASHER,FLAT 1/4..... UOC:TTA,TTT,TT1,UUA,UUU,UU1,UU2	11
* 5	PAOZZ	5310000614650	80205	M45913/3-4CG8C	NUT,SELF-LOCKING,HE 1/4-20..... UOC:TTA,TTT,TT1,UUA,UUU,UU1,UU2	5
* 6	PAOZZ	5305000712506	80204	B1821BH025C050N	SCREW,CAP,HEXAGON H 1/4-20 X 1/2... UOC:TTA,TTT,TT1,UUA,UUU,UU1,UU2	5
* 7	PFOZZ	2510015657327	34623	6038537	ROD,HOOD,VEHICULAR..... UOC:TTA,TTT,TT1,UUA,UUU,UU1,UU2	1
* 8	PFOZZ	5340015657323	19207	12469374	CLIP,SPRING TENSION..... UOC:TTA,TTT,TT1,UUA,UUU,UU1,UU2	1
* 9	PAOZZ	2930015667785	47NR0	X21678	COOLER,LUBRICATING..... UOC:TTA,TTT,TT1,UUA,UUU,UU1,UU2	1
* 10	PAOZZ	4730015688808	47NR0	818839	.ELBOW,PIPE TO HOSE..... UOC:TTA,TTT,TT1,UUA,UUU,UU1,UU2	1
* 11	PAOZZ	4730015687803	47NR0	817549	.ADAPTER,STRAIGHT PI..... UOC:TTA,TTT,TT1,UUA,UUU,UU1,UU2	1
* 12	PFOZZ	5305015662879	34623	6043006	SCREW,SHOULDER 3/8-16 X 2.50..... UOC:TTA,TTT,TT1,UUA,UUU,UU1,UU2	4
* 13	PFOZZ	5310015661487	34623	6042658	WASHER,SPRING TENSI 3/8..... UOC:TTA,TTT,TT1,UUA,UUU,UU1,UU2	8
* 14	PAOZZ	5310014124013	24617	2436163	WASHER,FLAT 3/8..... UOC:TTA,TTT,TT1,UUA,UUU,UU1,UU2	4
* 15	PAOZZ	5340012293632	19207	12340571-2	CLAMP,LOOP..... UOC:TTA,TTT,TT1,UUA,UUU,UU1,UU2	3
* 16	PAOZZ	5305012364349	7X677	172482	SCREW,TAPPING 3/8-16 X 5/8..... UOC:TTA,TTT,TT1,UUA,UUU,UU1,UU2	1
* 17	PAOZZ	4720015660977	34623	6043134	HOSE ASSY,NONME FROM COOLER..... UOC:TTA,TTT,TT1,UUA,UUU,UU1,UU2	1
* 18	PAOZZ	4720015657987	34623	6038644	HOSE ASSEMBLY,NONME TO COOLER..... UOC:TTA,TTT,TT1,UUA,UUU,UU1,UU2	1
* 19	PAOZZ	5975009856630	96906	MS3367-3-0	STRAP,TIEDOWN,ELECT..... UOC:TTA,TTT,TT1,UUA,UUU,UU1,UU2	2
* 20	PAOZZ	5340012102747	19207	12338779	BRACKET,OIL COOLER..... UOC:TTA,TTT,TT1,UUA,UUU,UU1,UU2	1
* 21	PAOZZ	5310011517347	24617	2436167	WASHER,FLAT 5/8..... UOC:TTA,TTT,TT1,UUA,UUU,UU1,UU2	1
* 22	PAOZZ	5310013897640	80205	MS35338-145	WASHER,LOCK 5/8..... UOC:TTA,TTT,TT1,UUA,UUU,UU1,UU2	1

(1) ITEM NO	(2) SMR CODE	(3) NSN	(4) CAGEC	(5) PART NUMBER	(6) DESCRIPTION AND USABLE ON CODES(UOC)	(7) QTY
* 23	PAOZZ	5305007262567	80204	B1821BH063F500N	SCREW,CAP,HEXAGON H 5/8-18 X 5.00.. UOC:TTA,TTT,TT1,UUA,UUU,UU1,UU2	1
* 24	PAOZZ	5305002253842	80204	B1821BH025C113N	SCREW,CAP,HEXAGON H 1/4-20 X 1.125. UOC:TTA,TTT,TT1,UUA,UUU,UU1,UU2	1
* 25	PAOZZ	5305009143818	80205	MS51975-8	SCREW,SHOULDER 1/4-20 X .923..... UOC:TTA,TTT,TT1,UUA,UUU,UU1,UU2	2
* 26	PAOZZ	5340014753485	19207	12469372	BRACKET,MOUNTING L.H..... UOC:TTA,TTT,TT1,UUA,UUU,UU1,UU2	1
* 26	PAOZZ	5340014753480	19207	12469373	BRACKET,MOUNTING R.H..... UOC:TTA,TTT,TT1,UUA,UUU,UU1,UU2	1
* 27	PAOZZ	5310013980319	24617	9424215	NUT,SELF-LOCKING,HE 1/4-20..... UOC:TTA,TTT,TT1,UUA,UUU,UU1,UU2	2

END OF FIGURE

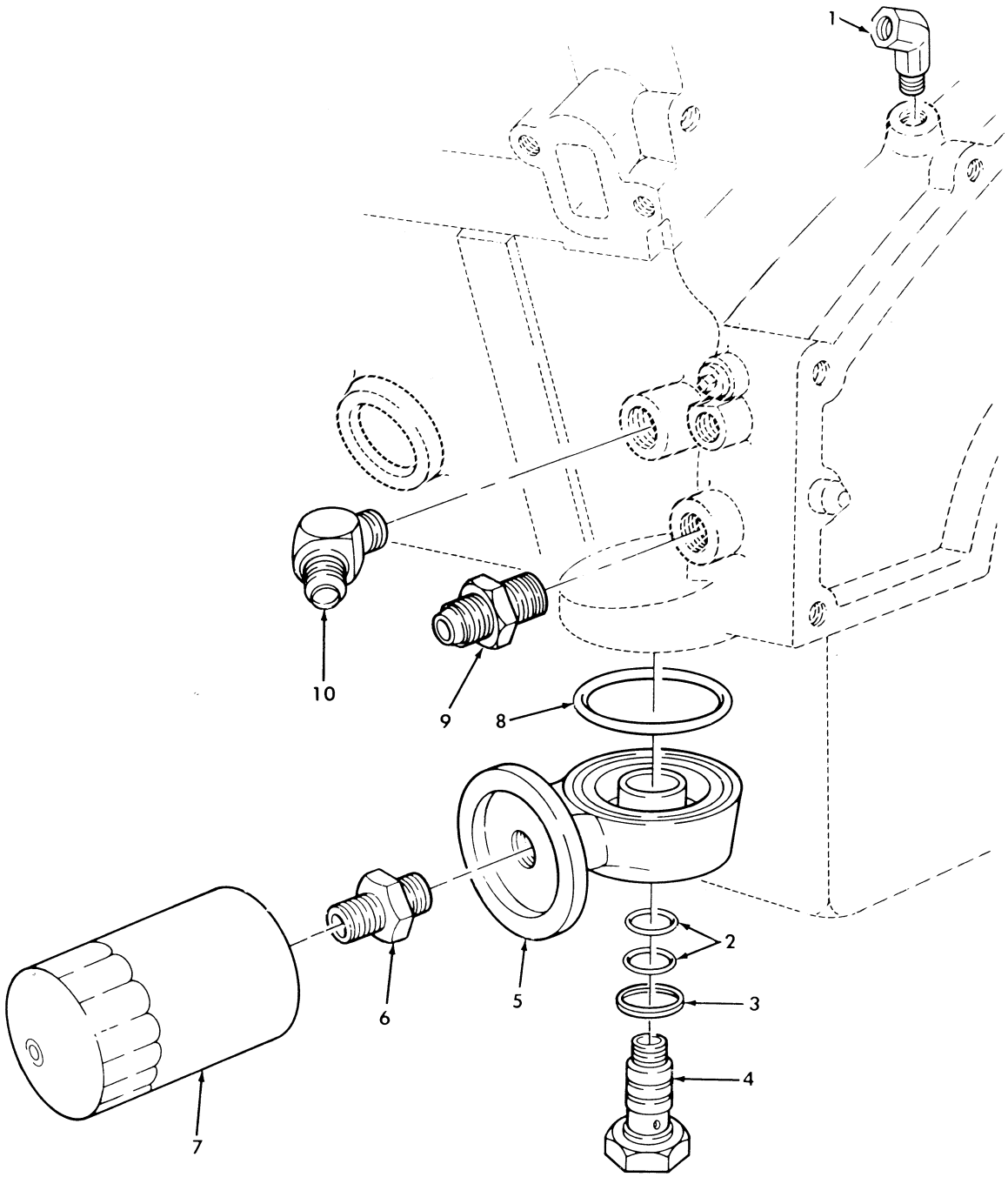

Figure 13. Oil Filter, Adapter, and Oil Line Fittings.

(1) ITEM NO	(2) SMR CODE	(3) NSN	(4) CAGEC	(5) PART NUMBER	(6) DESCRIPTION AND USABLE ON CODES(UOC)	(7) QTY
					GROUP 0106 ENGINE LUBRICATION SYSTEM	
					FIG. 13 OIL FILTER,ADAPTER,AND OIL LINE FITTINGS	
1	PAOZZ	4730009115707	21450	454097	ELBOW,PIPE	1
2	PAOZZ	5331011074950	81349	M83461/1-020	O-RING	2
3	PAOZZ	5330011846500	34623	5577933	GASKET	1
4	PAOZZ	4730011876929	19207	12339410	BOLT,FLUID PASSAGE	1
5	PFOZZ	4730011687872	19207	12338780	BRACKET,FILTER MOUN	1
6	PAOZZ	4730011500879	7X677	14022700	REDUCER,BOSS	1
7	PAOZZ	4330013988484	70040	PF1218	FILTER ELEMENT,FLUI	1
8	PAOZZ	5331011830971	81349	M83461/1-236	O-RING	1
9	PAOZZ	4730004448489	81343	10-8070102BA	ADAPTER,STRAIGHT,PI	1
10	PAOZZ	4730012064810	81343	10-8070302C	ELBOW,PIPE TO TUBE	1

END OF FIGURE

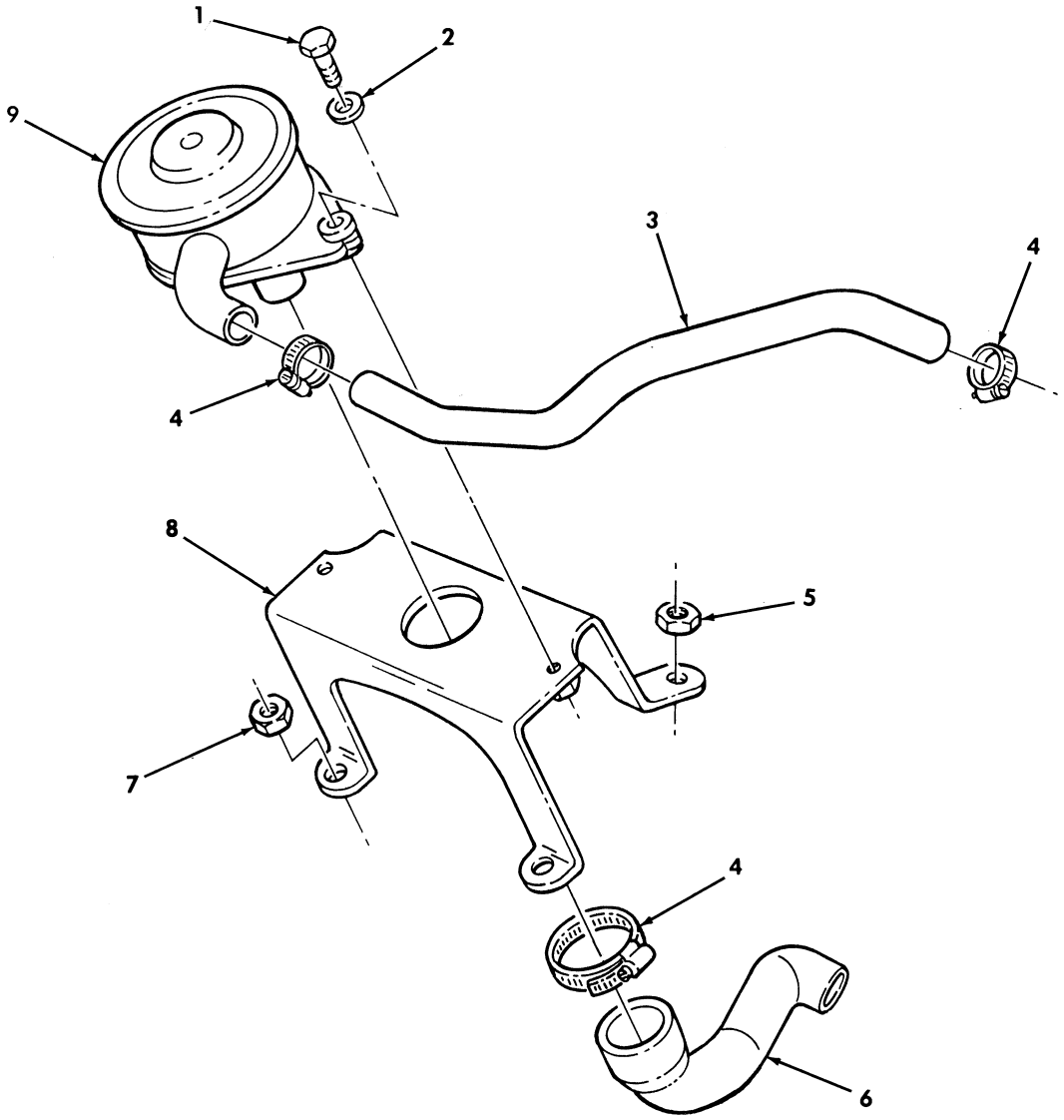

Figure 14. Crankcase Depression Regulator Valve and Mounting Hardware.

(1) ITEM NO	(2) SMR CODE	(3) NSN	(4) CAGEC	(5) PART NUMBER	(6) DESCRIPTION AND USABLE ON CODES(UOC)	(7) QTY
					GROUP 0106 ENGINE LUBRICATION SYSTEM	
					FIG. 14 CRANKCASE DEPRESSION REGULATOR VALVE AND MOUNTING HARDWARE	
* 1	PAOZZ	5306010758519	80205	MS90725-36	BOLT,MACHINE 5/16-18 X 1.25.....	2
2	PAOZZ	5310000814219	96906	MS27183-12	WASHER,FLAT 5/16.....	2
3	PAOZZ	4720012100484	34623	5588701	HOSE,PREFORMED.....	1
4	PAOZZ	4730010887798	76599	4816SS-305	CLAMP,HOSE.....	3
5	PAOZZ	5310013958747	80204	B18241B100F	NUT,PLAIN.....	2
6	PAOZZ	4720014557830	19207	12460549	HOSE,PREFORMED.....	1
7	PAOZZ	5310003287657	80204	B18241B080	NUT,PLAIN,HEXAGON.....	2
8	PFOZZ	5342014330932	34623	RCSK17339	BRACKET,ENGINE ACCE.....	1
9	PAOZZ	2990011479284	7X677	25042462	VALVE,POSITIVE CRAN.....	1

END OF FIGURE

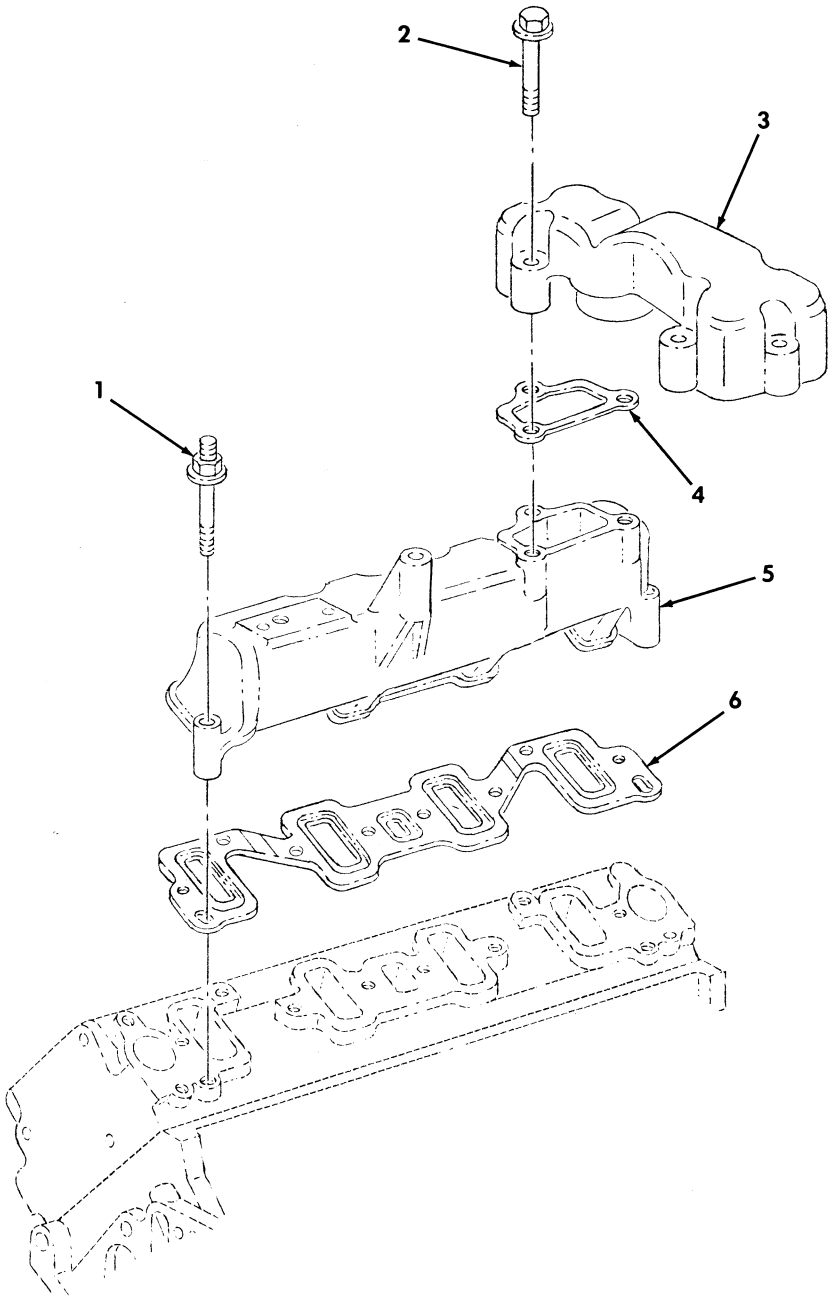

Figure 15. Air Intake Manifolds.

(1) ITEM NO	(2) SMR CODE	(3) NSN	(4) CAGEC	(5) PART NUMBER	(6) DESCRIPTION AND USABLE ON CODES(UOC)	(7) QTY
					GROUP 0108 MANIFOLDS	
					FIG. 15 AIR INTAKE MANIFILDS	
1	PAFZZ	5307014382319	7X677	12553066	STUD,SHOULDERED.....	16
2	PAFZZ	5306014382322	7X677	12554344	BOLT,MACHINE.....	6
3	PAFZZ	2815014398163	34623	RCSK17829	MANIFOLD,INTAKE CENTER INLET.....	1
4	PAFZZ	5330014370547	7X677	10211663	GASKET.....	2
5	PAFZZ	2815014371015	7X677	10236744	MANIFOLD,INTAKE R.H.....	1
5	PAFZZ	2815014371014	7X677	10236743	MANIFOLD,INTAKE L.H.....	1
* 6	KFFZZ		7X677	12555733	GASKET PART OF KIT P/N 12431704 PART OF KIT P/N 12456409.....	2

END OF FIGURE

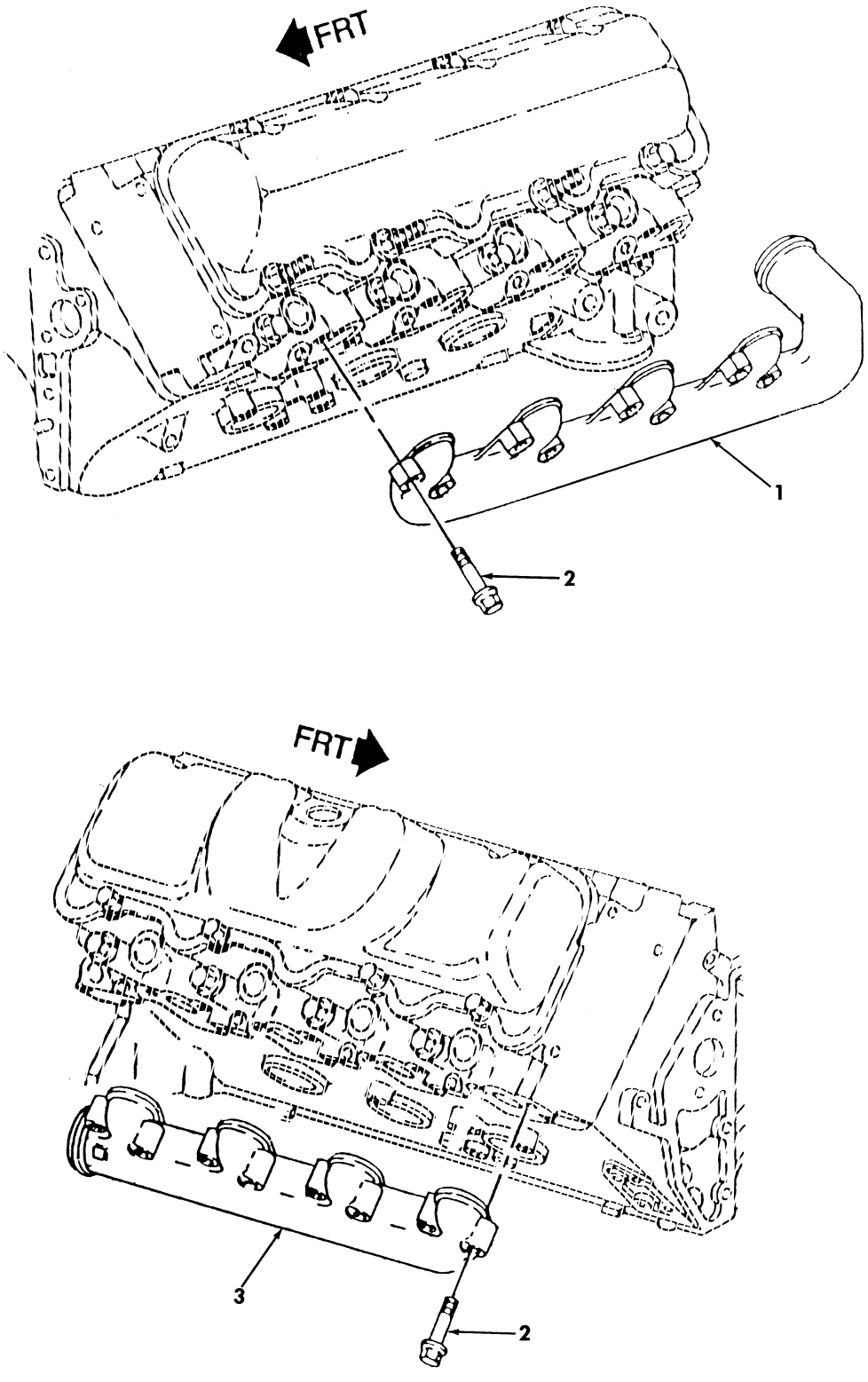

Figure 16. Exhaust Manifolds.

(1) ITEM NO	(2) SMR CODE	(3) NSN	(4) CAGEC	(5) PART NUMBER	(6) DESCRIPTION AND USABLE ON CODES(UOC)	(7) QTY
					GROUP 0108 MANIFOLDS	
					FIG. 16 EXHAUST MANIFOLDS	
1	PAOZZ	2815014371021	7X677	10238374	MANIFOLD,EXHAUST L.H.....	1
2	PAOZZ	5306011496278	7X677	14028922	BOLT,MACHINE.....	16
3	PAOZZ	2815014371027	7X677	10238373	MANIFOLD,EXHAUST R.H.....	1

END OF FIGURE

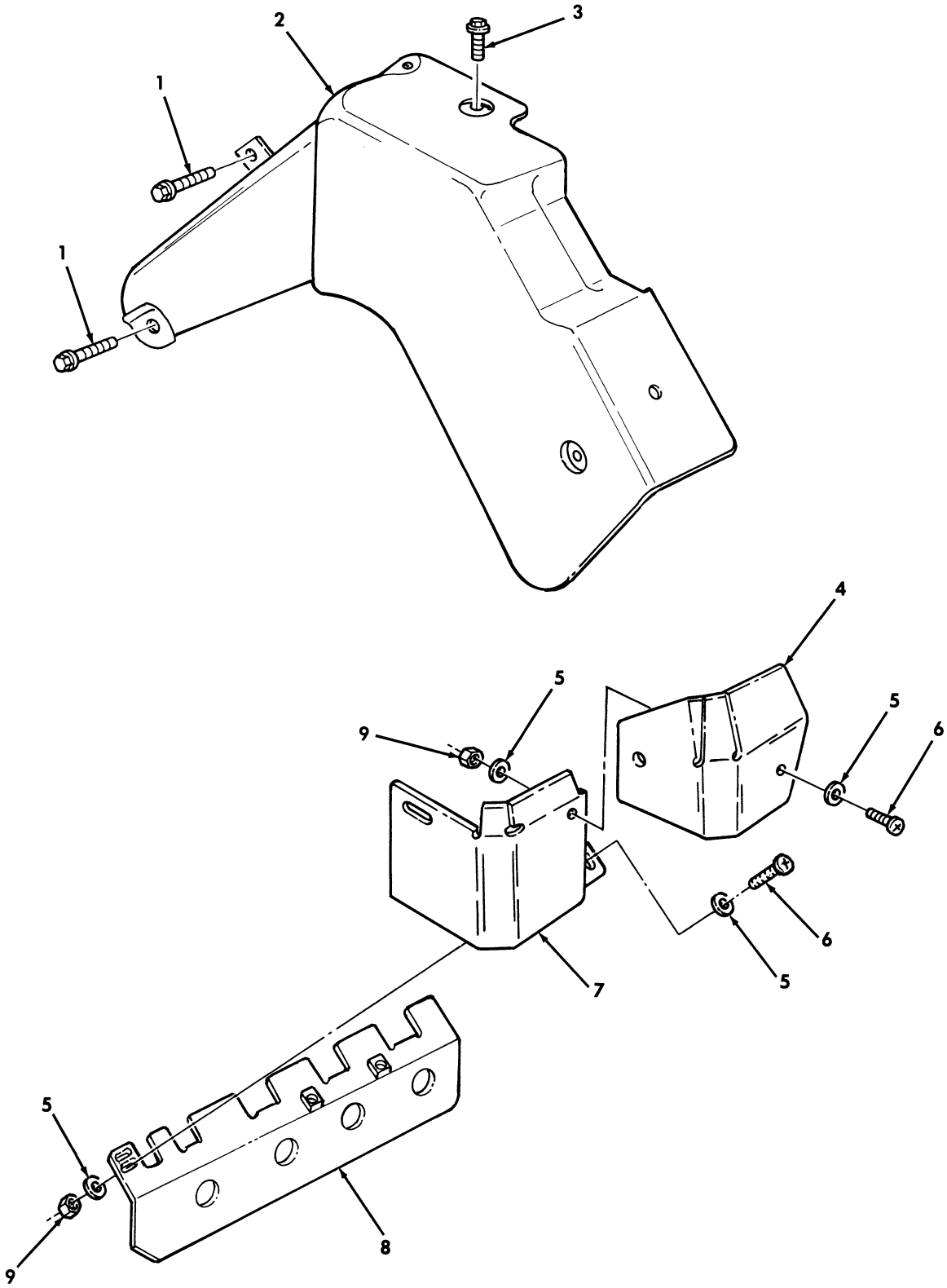

Figure 17. Exhaust Manifold Heat Shields.

(1) ITEM NO	(2) SMR CODE	(3) NSN	(4) CAGEC	(5) PART NUMBER	(6) DESCRIPTION AND USABLE ON CODES(UOC)	(7) QTY
					GROUP 0108 MANFOLDS ENGINE	
					FIG. 17 EXHAUST MANIFOLD HEAT SHIELDS	
1	PAOZZ	5305011865381	7X677	11515763	SCREW,CAP HEXAGON H 10.0-12.3.....	2
2	PAOZZ	2990014398249	7X677	12550114	HEAT SHIELD,EXHAUST.....	1
3	PAOZZ	5306014558013	34623	6007736	BOLT,MACHINE M8-1.25 X 15 MM.....	4
4	PFOZZ	2815014377408	34623	RCSK18089	GUARD,DIESEL ENGINE HEATSHIELD.....	1
* 5	PAOZZ	5310008098544	96906	MS27183-7	WASHER,FLAT.....	6
* 6	PAOZZ	5305009846193	80205	MS35206-245	SCREW,MACHINE .164-32 X .500.....	3
7	PAOZZ	2990014421168	34623	RCSK17221	HEAT SHIELD,EXHAUST.....	1
8	PAOZZ	2990014332546	34623	RCSK17282	HEAT SHIELD,EXHAUST R.H.....	1
9	PAOZZ	5310010695243	72582	271163	NUT,PLAIN ASSEMBLED .164-32.....	2

END OF FIGURE

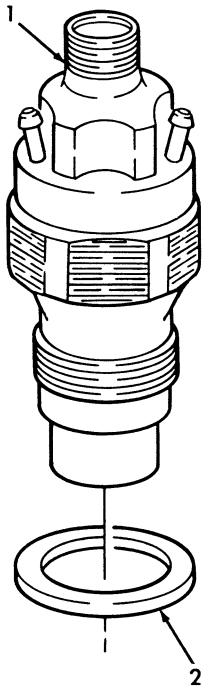

Figure 18. Fuel Injector Nozzle and Gasket.

(1) ITEM NO	(2) SMR CODE	(3) NSN	(4) CAGEC	(5) PART NUMBER	(6) DESCRIPTION AND USABLE ON CODES(UOC)	(7) QTY
					GROUP 03 FUEL SYSTEM 0301 FUEL INJECTOR	
					FIG. 18 FUEL INJECTOR NOZZLE AND GASKET	
1	PAFZZ	2910013991848	7X677	10233973	INJECTOR ASSEMBLY,F FUEL INJECTION, 6.5 LITER TURBO.....	8
* 2	PAFZZ	5330011501215	7X677	14022557	GASKET PART OF KIT P/N 12456409....	8
					END OF FIGURE	

1—2

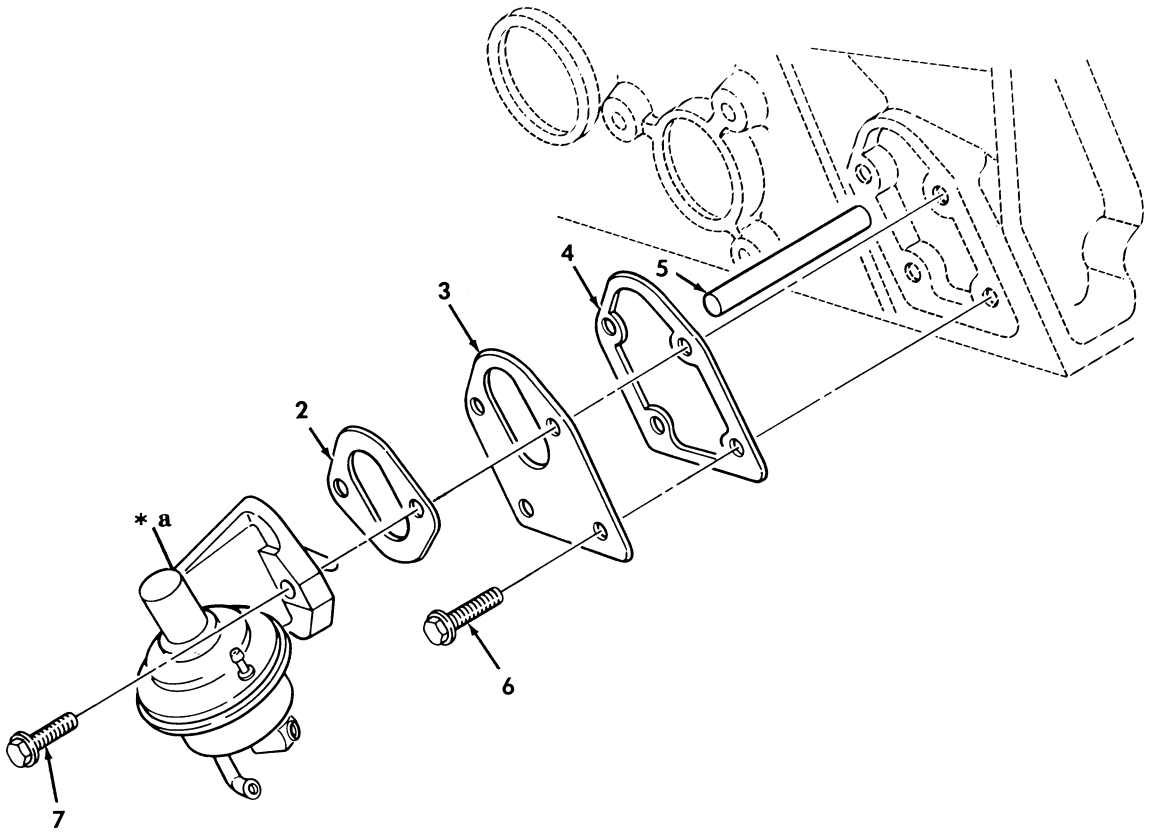

* a PART OF ITEM 1

Figure 19. Fuel Pump and Mounting Hardware.

(1) ITEM NO	(2) SMR CODE	(3) NSN	(4) CAGEC	(5) PART NUMBER	(6) DESCRIPTION AND USABLE ON CODES(UOC)	(7) QTY
					GROUP 0302 FUEL PUMPS	
					FIG. 19 FUEL PUMP AND MOUNTING HARDWARE	
* 1	PAOZZ	2910011687905	70040	6472357	PUMP,FUEL,CAM ACTUA.....	1
* 2	PAOZZ	5330011121533	7X677	10114141	.GASKET PART OF KIT P/N 12514591-RB-12532530.....	1
3	PAOZZ	2910004932138	7X677	3719599	PLATE,FUEL PUMP.....	1
* 4	PAOZZ	5330014728179	7X677	12560223	GASKET PART OF KIT P/N 12514591-RB-12532530.....	1
5	PAOZZ	5315011514180	7X677	14050425	PIN,STRAIGHT,HEADLE.....	1
6	PAOZZ	5306011514925	7X677	11509669	BOLT,ASSEMBLED WASH 6-1.0 X 13 MM..	2
* 7	PAOZZ	5306014974738	34623	5740269	BOLT,ASSEMBLED WASH 3/8-16 X 1.44 MM.....	2
					END OF FIGURE	

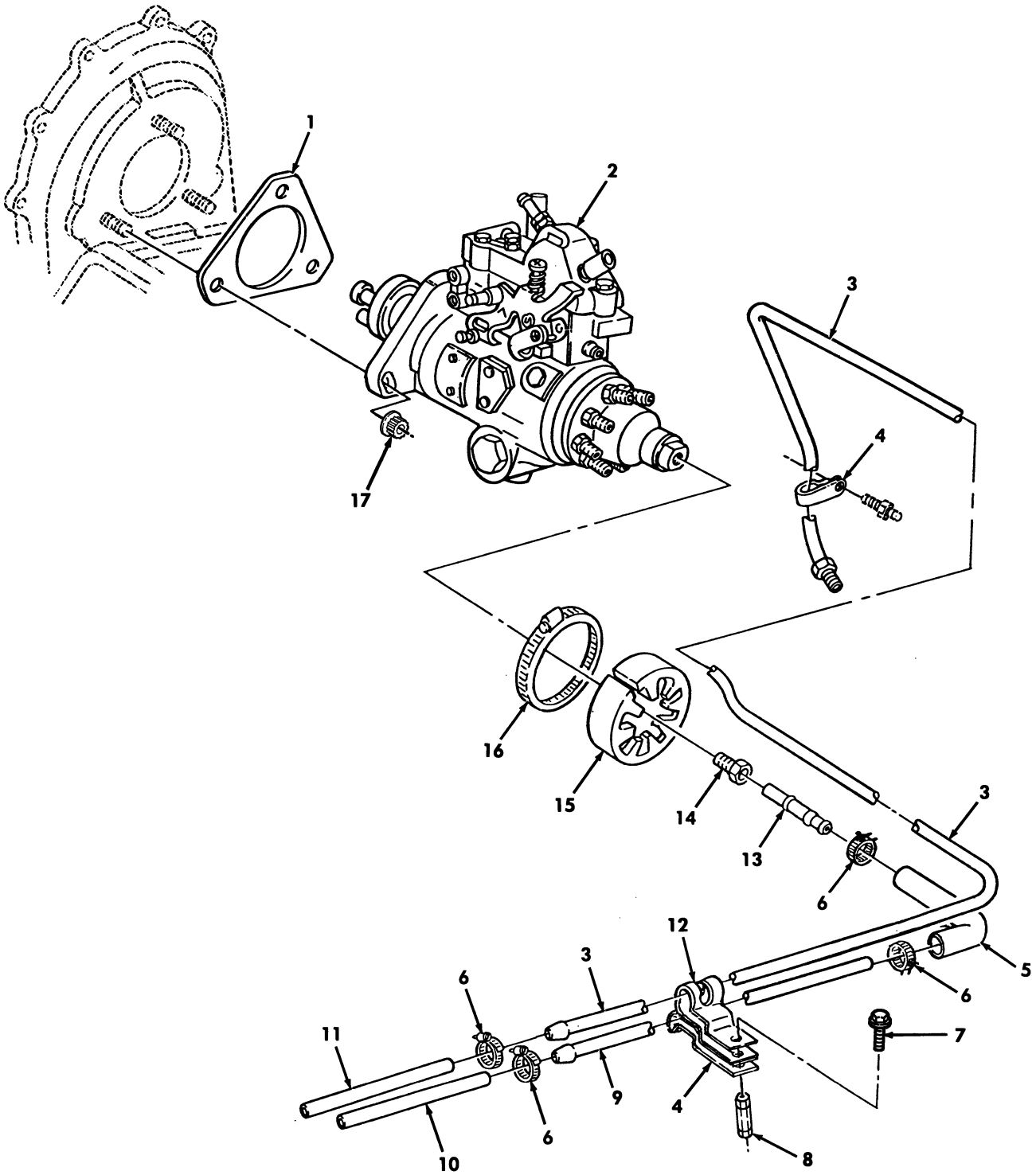

FOR THROTTLE POSITION SENSOR
SOLENOID SEE FIGURE 63, ITEM 8

Figure 20. Fuel Injection Pump and Fuel Filter Lines.

(1) ITEM NO	(2) SMR CODE	(3) NSN	(4) CAGEC	(5) PART NUMBER	(6) DESCRIPTION AND USABLE ON CODES(UOC)	(7) QTY
					GROUP 0302 FUEL PUMPS	
					FIG. 20 FUEL INJECTION PUMP AND FUEL FILTER LINES	
1	PAFZZ	5330011505944	7X677	10137486	GASKET PART OF KIT P/N 12514591-RB-12532530.....	1
2	PAFHH	2910014348597	84760	DB2831-5079	PUMP,FUEL METERING.....	1
3	PAFZZ	4710011856179	34623	5741611	TUBE ASSEMBLY,METAL.....	1
4	PAOZA	5340014623446	7X677	14032383	CLAMP,LOOP.....	2
5	MOOZZ		11862	12554629	HOSE,NONMETALLIC MAKE FROM HOSE P/N 9438257,4 INCHES LONG.....	1
6	PAOZZ	4730008716729	19207	12273192	CLAMP,HOSE.....	4
7	PAOZZ	5305013976850	24617	11502685	SCREW,CAP,HEXAGON H #10-1.5 X 20.0 MM.....	1
8	PAOZZ	5310014618011	7X677	12554517	NUT,PLAIN BARREL.....	1
9	PAFZZ	4710014609630	7X677	12554094	TUBE ASSEMBLY,METAL.....	1
10	MOOZZ		34623	5740702	HOSE,NONMETALLIC MAKE FROM HOSE P/N 9438373,10 INCHES LONG.....	1
11	MOOZZ		72582	23500024	HOSE,NONMETALLIC MAKE FROM HOSE P/N 9438257,8 INCHES LONG.....	1
12	PAOZZ	5342011301141	72582	8922216	CLIP.....	1
13	PAFZZ	4710011610138	7X677	12548430	TUBE,METAL.....	1
14	PAFZZ	4730000142432	24617	137397	INVERTED NUT,TUBE C.....	1
15	PAFZZ	5342012501098	19207	12339491-1	BOOT.....	1
* 16	PAFZZ	4730009086292	81646	MS35842-14	CLAMP,HOSE.....	1
17	PAOZZ	5310014624459	7X677	12550863	NUT,PLAIN,HEXAGON 10-1.5 MM.....	3

END OF FIGURE

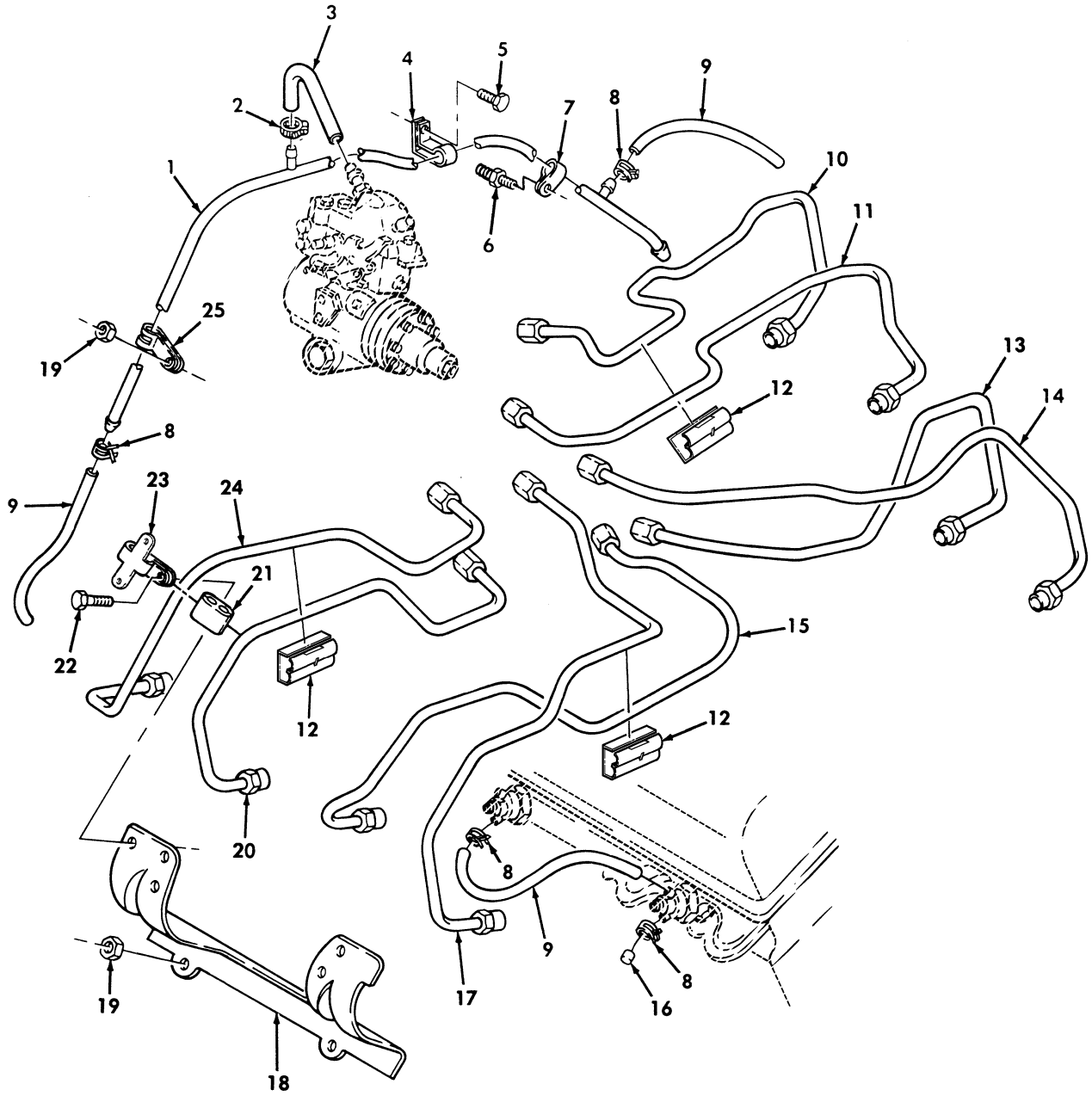

Figure 21. Fuel Injection Supply and Return Lines.

(1) ITEM NO	(2) SMR CODE	(3) NSN	(4) CAGEC	(5) PART NUMBER	(6) DESCRIPTION AND USABLE ON CODES(UOC)	(7) QTY
					GROUP 0302 FUEL PUMPS	
					FIG. 21 FUEL INJECTION SUPPLY AND RETURN LINES	
1	PAOZZ	4710014469570	7X677	12554835	TUBE,BENT,METALLIC 6.5 LITER.....	1
* 2	PAOZZ	4730011633544	7X677	15620999	CLAMP,HOSE.....	2
* 3	MOOZZ		11862	9439363	HOSE,NONMETALLIC MAKE FROM HOSE, P/N 4219-3681,7 INCHES LONG.....	1
* 4	PAOZZ	5340011519957	7X677	14033895	CLAMP,LOOP.....	1
* 5	PAOZZ	5306011483667	7X677	11504512	BOLT,MACHINE 10-1.5 X 16 MM.....	1
* 6	PAOZZ	5307011509538	15946	22515630	STUD,SHOULDERED.....	1
* 7	PAOZZ	5340008815303	96906	MS21333-45	CLAMP,LOOP.....	1
* 8	PAOZZ	4730001506118	19207	11663000	CLAMP,HOSE.....	18
* 9	MOOZZ		7X677	14066305-AR	TUBING,NONMETALLIC MAKE FROM HOSE P/N 9439046,LEGNTH TO FIT.....	8
* 10	PAFZZ	4710014128611	7X677	14098632	TUBE ASSEMBLY,METAL 6.5 LITER,#2 CYLINDER.....	1
* 11	PAFZZ	4710014121669	7X677	14098634	TUBE ASSEMBLY,METAL 6.5 LITER,#4 CYLINDER.....	1
* 12	PAOZZ		7X677	12554808	GROMMET,NONMETALLIC 1996 AND ABOVE, INNER AND CENTER.....	8
* 13	PAFZZ	4710014118489	7X677	14098636	TUBE ASSEMBLY,METAL 6.5 LITER,#6 CYLINDER.....	1
* 14	PAFZZ	4710014118492	34623	14098638	TUBE ASSEMBLY,METAL 6.5 LITER,#8 CYLINDER.....	1
* 15	PAFZZ	4710014118488	7X677	14098635	TUBE ASSEMBLY,METAL 6.5 LITER,#5 CYLINDER.....	1
* 16	PAOZZ	5342011661534	7X677	14066301	CAP.....	2
* 17	PAFZZ	4710014121667	7X677	14098637	TUBE ASSEMBLY,METAL 6.5 LITER,#7 CYLINDER.....	1
* 18	PFOZZ	5340011596626	7X677	14033824	BRACKET,DOUBLE ANGL R.H.....	1
* 18	PFOZA	5340014409678	34623	05742118	BRACKET,MOUNTING L.H.....	1
* 19	PAOZZ	5310011653331	24617	11500749	NUT,PLAIN,HEXAGON.....	5
* 20	PAFZZ	4710014128615	7X677	14098633	TUBE ASSEMBLY,METAL 6.5 LITER,#3 CYLINDER.....	1
* 21	PAOZZ	5325011604618	7X677	23503124	GROMMET,NONMETALALIC.....	4
* 22	PAOZZ	5305011501521	7X677	11503617	SCREW,TAPPING.....	4
* 23	PAOZZ	5340014932538	7X677	10225180	CLAMP,LOOP.....	4
* 24	PAOZZ	4710014931712	7X677	10154669	TUBE ASSEMBLY,METAL 6.5 LITER,#1 CYLINDER.....	1
* 25	PAOZZ	5340014932555	7X677	10151497	CLAMP,LOOP.....	1

END OF FIGURE

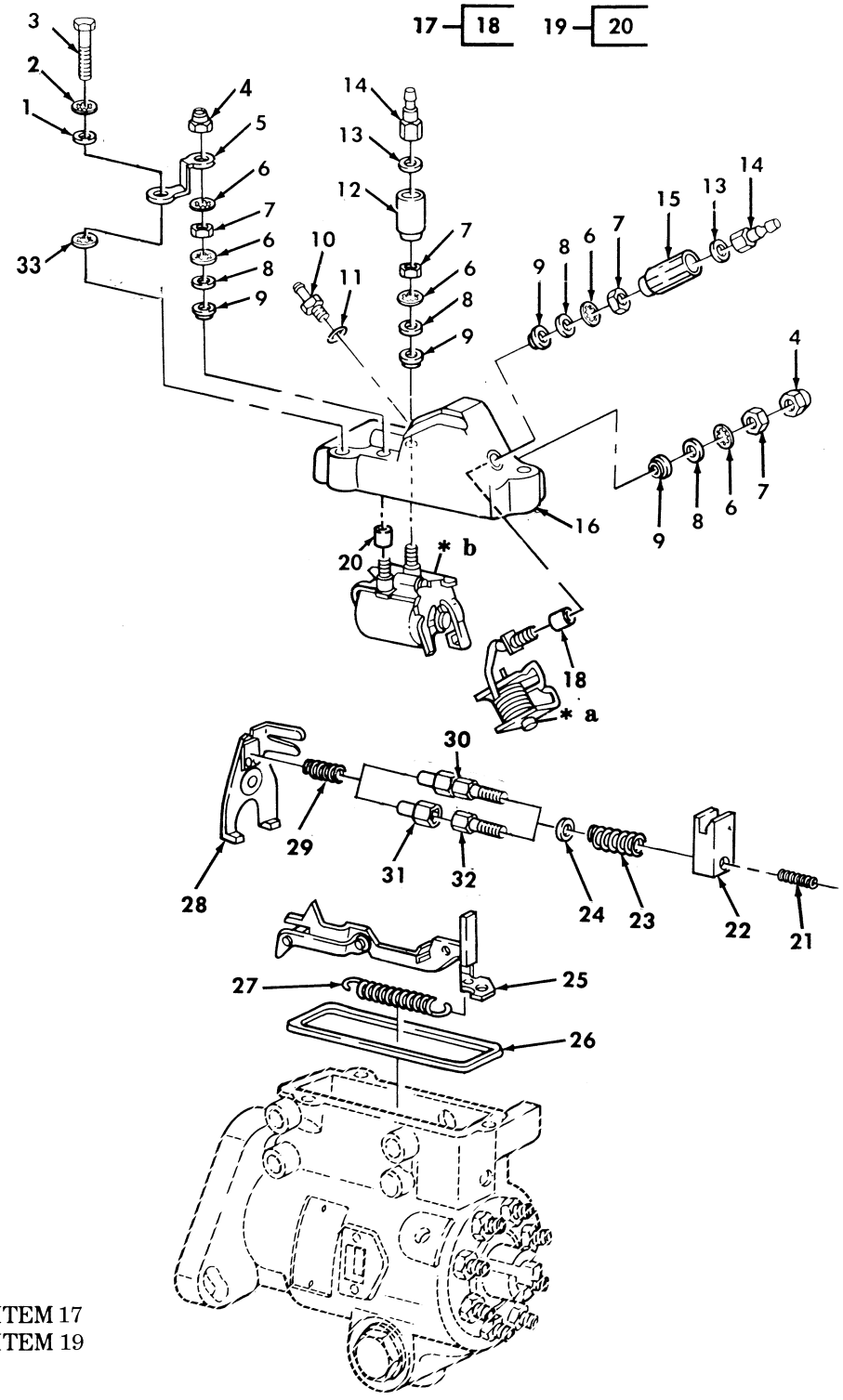

*** a** PART OF ITEM 17
*** b** PART OF ITEM 19

Figure 22. Fuel Injection Pump Cover Assembly, Governor Linkage, and Related Parts.

(1) ITEM NO	(2) SMR CODE	(3) NSN	(4) CAGEC	(5) PART NUMBER	(6) DESCRIPTION AND USABLE ON CODES(UOC)	(7) QTY
					GROUP 0302 FUEL PUMPS	
					FIG. 22 FUEL INJECTION PUMP COVER ASSEMBLY,GOVERNOR LINKAGE,AND RELATED PARTS	
* 1	PAFZZ	5310008411131	00198	3001564	WASHER,FLAT.....	3
* 2	PAFZZ	5310002139964	84760	11582	WASHER,LOCK.....	3
3	PAFZZ	5305011184114	84760	22351	SCREW,MACHINE.....	3
4	PAFZZ	5310005825765	03350	22FT832	NUT,SELF-LOCKING,HE PART OF KIT P/N 26431.....	2
5	PAFZZ	2920011173251	84760	20951	LEAD,IGNITION,ENGIN PART OF KIT P/N 26431.....	1
6	PAFZZ	5310005590070	96906	MS35333-38	WASHER,LOCK PART OF KIT P/N 26431..	5
7	PAFZZ	5310009349757	96906	MS35649-282	NUT,PLAIN,HEXAGON PART OF KIT P/N 26431.....	4
8	PAFZZ	5310001900752	22787	10-9858	WASHER,FLAT PART OF KIT P/N 26431..	4
9	PAFZZ	5310008307825	84760	12500	WASHER,SHOULDERED PART OF KIT P/N 26431.....	4
10	PAFZZ	4820011659596	84760	23183	VALVE,CHECK.....	1
11	PAFZZ	5331012322145	0CTH1	3921936	O-RING PART OF KIT P/N 30405.....	1
12	PAFZZ	2920011883259	84760	27010	HOUSING,TERMINAL.....	1
13	PAFZZ	5310011910440	84760	27009	WASHER,FLAT.....	2
14	PAFZZ	5940011851122	84760	27008	TERMINAL,STUD.....	2
15	PAFZZ	2530011949868	84760	27065	BOOT, VEHICULAR COM.....	1
16	PAFZZ	5340012503240	84760	27014	COVER,ACCESS.....	1
17	PAFZZ	5945011903559	84760	27007	SOLENOID,ELECTRICAL COLD ADVANCE..	1
18	PFFZZ	4710012305611	84760	23190	.TUBE,INSULATING PART OF KIT P/N 30405.....	2
19	PAFZZ	5945011883194	84760	27011	SOLENOID,ELECTRICAL FUEL SHUTOFF..	1
20	PFFZZ	4710012305611	84760	23190	.TUBE,INSULATING PART OF KIT P/N 30405.....	2
21	PAHZZ	5360013178098	84760	23744	SPRING,HELICAL,COMP.....	1
22	PAHZZ	2910013162312	84760	24880	BLOCK ASSEMBLY,GOVE.....	1
23	PAHZZ	5360014371104	84760	29864	SPRING,HELICAL,COMP.....	1
24	PAHZZ	5310011886743	84760	22325	WASHER,FLAT.....	1
25	PAHZZ	2910011892142	84760	18021	HOOK ASSEMBLY,GOVER.....	1
26	PAFZZ	5330012342615	0CTH1	3921950	GASKET PART OF KIT P/N 30405.....	1
27	PAHZZ	5360003359327	84760	11919	SPRING,HELICAL,EXTE.....	1
28	PAHZZ	2520011883282	84760	23461	SHIFTER FORK.....	1
29	PAHZZ	5360014137363	84760	30776	SPRING,HELICAL,COMP.....	1
30	PAHZZ	3040013170367	84760	23610	CONNECTING LINK,RIG.....	1
31	PAHZZ	2910011883252	84760	22327	SLEEVE,ADJUSTING,GO.....	1
32	PAHZZ	2910012569157	84760	27927	RETAINER,HELICAL CO.....	1
33	PAHZZ	5310011182248	84760	18493	WASHER,LOCK PART OF KIT P/N 26431...	1

END OF FIGURE

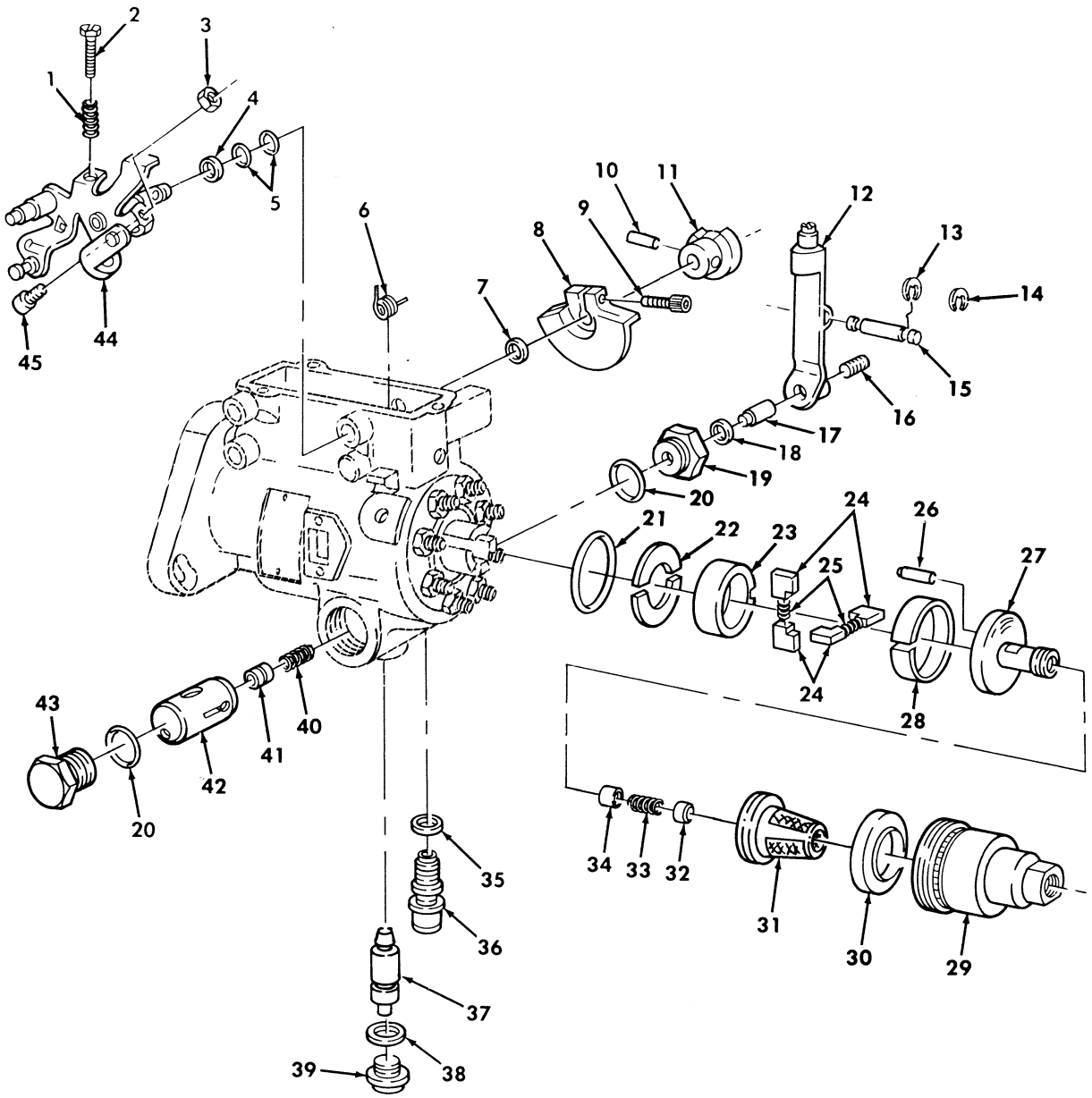

Figure 23. Fuel Injection Pump Throttle Shaft, Regulator, Transfer Pump, and Related Parts.

(1) ITEM NO	(2) SMR CODE	(3) NSN	(4) CAGEC	(5) PART NUMBER	(6) DESCRIPTION AND USABLE ON CODES(UOC)	(7) QTY
					GROUP 0302 FUEL PUMPS	
					FIG. 23 FUEL INJECTION PUMP THROTTLE SHAFT,REGULATOR,TRANSFER PUMP,AND RELATED PARTS	
1	PAHZZ	5360011906215	84760	21358	SPRING,HELICAL,COMP.....	1
2	PAHZZ	5305012159425	84760	21646	SCREW.....	1
3	PAHZZ	5310009349751	96906	MS35650-302	NUT,PLAIN,HEXAGON #10-32.....	1
4	PAHZZ	5365011880993	84760	22900	SPACER,SLEEVE.....	1
5	PAHZZ	5331012159638	84760	24585	O-RING PART OF KIT P/N 30405.....	2
6	PAHZZ	5360013179451	84760	26181	SPRING,HELICAL,COMP.....	1
7	PAHZZ	5365008774956	84760	14408	SHIM PART OF KIT P/N 30405.....	1
8	PAHZZ	3040014459101	84760	29122	CAM,CONTROL.....	1
9	PAHZZ	5305011905745	84760	22398	SCREW,MACHINE.....	1
10	PAHZZ	5315011675584	84760	21284	PIN,GROOVED,HEADLES PART OF KIT P/N 30405.....	1
11	PAHZZ	3040011892163	84760	27006	CAM,CONTROL.....	1
12	PAHZZ	3040013170368	84760	28937	LEVER,REMOTE CONTRO.....	1
13	PAHZZ	5325011880962	84760	23566	RING,RETAINING PART OF KIT P/N 30405	2
14	PAHZZ	5325014137364	84760	30844	RING,RETAINING.....	2
15	PAHZZ	5315011900429	84760	22397	PIN,GROOVED,HEADLES.....	1
16	PAHZZ	5305012605737	84760	26087	SETSCREW.....	1
17	PAHZZ	5340011926030	84760	22917	PLUNGER,DETENT.....	1
18	PAHZZ	5330012338597	84760	27163	SEAL.....	1
19	PAHZZ	5340014396455	84760	29045	PLUG,VENT.....	1
20	PAHZZ	5330012332778	84760	27609	SEAL,DRAIN PLUG PART OF KIT P/N 30405.....	2
21	PAHZZ	5330012360474	84760	27608	PACKING,PREFORMED PART OF KIT P/N 30405.....	1
22	PAHZZ	2910011890895	84760	20530	RETAINER,ROTOR,TRAN.....	2
23	PAHZZ	2910012321044	84760	22988	LINER,TRANSFER PUMP.....	1
24	PAHZZ	2910012309007	84760	20803	VANE,INJECTION PUMP.....	4
24	PAHZZ	2910001486555	84760	20804	BLADE,TRANSFER PUMP OVERSIZE,.001..	4
25	PAHZZ	5360009002564	84760	15699	SPRING,HELICAL,COMP.....	2
26	PAHZZ	5315011880495	84760	19837	PIN.....	1
27	PAHZZ	2910011883249	84760	21200	REGULATOR ASSEMBLY,.....	1
28	PAHZZ	5325011880960	84760	20528	RING,RETAINING.....	1
29	PAHZZ	2910014140346	84760	28981	HOUSING,FUEL PUMP.....	1
30	PAHZZ	2910011883250	84760	20523	PLATE,PUMP PRESSURE.....	1
31	PAHZZ	2910013638782	84760	28986	SCREEN,FILTER,GOVER.....	1
32	PAHZZ	4730004596077	84760	15228	PLUG ASSEMBLY,END P.....	1
33	PAHZZ	5360013181894	84760	23915	SPRING,HELICAL,COMP.....	1
34	PAHZZ	2910014380655	84760	31240	PISTON,FUEL INJECTI.....	1
35	PAHZZ	5331012360472	0CTH1	3921940	O-RING PART OF KIT P/N 30405.....	1
36	PAHZZ	5305013637825	84760	26787	SCREW,MACHINE.....	1
37	PAHZZ	5315011892141	84760	23925	PIN,CAM ADVANCE.....	1
38	PAHZZ	5331012327886	0CTH1	3921939	O-RING PART OF KIT P/N 30405.....	1
39	PAHZZ	5365011880785	84760	23056	PLUG,MACHINE THREAD.....	1
40	PAHZZ	5360014137368	84760	28463	SPRING,HELICAL,COMP.....	1
41	PAHZZ	2910011900069	84760	22367	VALVE,SERVO ADVANCE.....	1
42	PAHZZ	2910014146651	84760	29043	PISTON,FUEL INJECTO STANDARD.....	1
42	PAHZZ	2910014147888	84760	29042	PISTON,FUEL INJECTO .002 OVERSIZE..	1

(1) ITEM NO	(2) SMR CODE	(3) NSN	(4) CAGEC	(5) PART NUMBER	(6) DESCRIPTION AND USABLE ON CODES(UOC)	(7) QTY
42	PAHZZ	2910014459041	84760	29041	INJECTION CONTROL,M .005 OVERSIZE..	1
42	PAHZZ	2815014469537	84760	29040	PISTON,FUEL INJECTO .008 OVERSIZE..	1
43	PAHZZ	5365013181887	84760	22505	PLUG,MACHINE THREAD.....	1
44	PAHZZ	2815014368370	84760	31843	CONTROL SHAFT ASSEM.....	1
45	PAHZZ	5305014143012	84760	27660	SETSCREW.....	1

END OF FIGURE

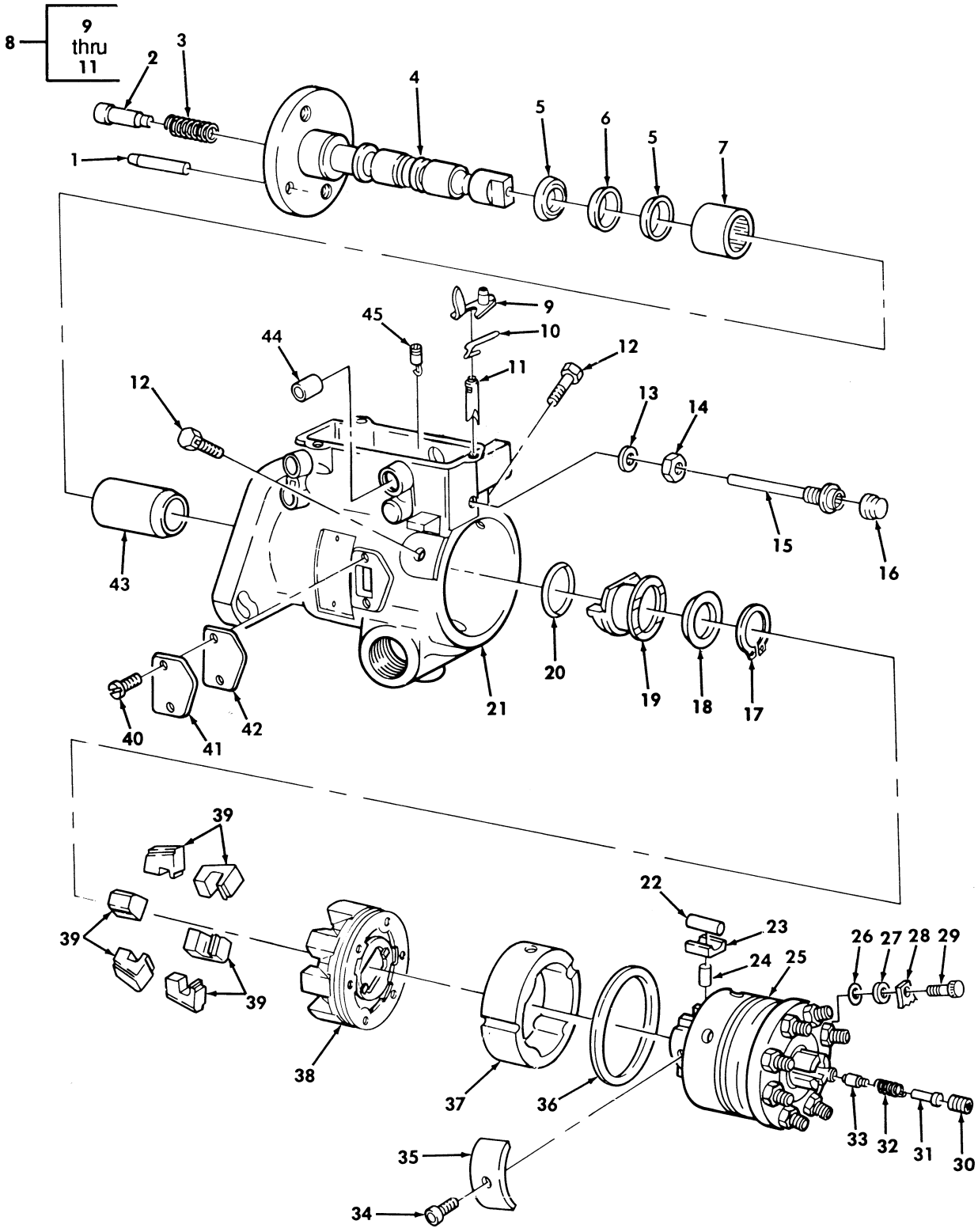

Figure 24. Fuel Injection Pump Housing, Head and Rotor, Drive Shaft, and Related Parts.

(1) ITEM NO	(2) SMR CODE	(3) NSN	(4) CAGEC	(5) PART NUMBER	(6) DESCRIPTION AND USABLE ON CODES(UOC)	(7) QTY
					GROUP 0302 FUEL PUMPS	
					FIG. 24 FUEL INJECTION PUMP HOUSING, HEAD AND ROTOR,DRIVE SHAFT,AND RELATED PARTS	
1	PAHZZ	5315011880765	84760	23100	PIN,STRAIGHT,HEADLE.....	1
1	PAHZZ	5315011880766	84760	23685	PIN,STRAIGHT,HEADLE OVERSIZE.....	1
2	PAHZZ	5315011913393	84760	22064	PIN,SHOULDER,HEADED.....	1
3	PAHZZ	5306008871536	84760	10541	SPRING,HELICAL COMP.....	1
4	PAHZZ	3040012470896	84760	29546	SHAFT,SHOULDERED.....	1
5	PAHZZ	5330007571680	84760	10453	PACKING,PREFORMED BLACK PART OF KIT P/N 30405.....	2
6	PAHZZ	5330011925779	84760	21860	PACKING,PREFORMED RED PART OF KIT P/N 30405.....	1
7	PAHZZ	3110011887682	84760	23101	BEARING,ROLLER,NEED.....	1
8	PAHZZ	4820007863971	84760	11563	VALVE,CALIBRATED FL.....	1
8	PAHZZ	4820011821073	84760	24441	VALVE,FLOW CONTROL METERING OVERSIZE.....	1
9	PAHZZ	2910011883255	84760	21895	.ARM,METERING VALVE.....	1
10	PAHZZ	5360011893466	84760	21917	.SPRING.....	1
11	PAHZZ	4820007863971	84760	11563	.VALVE,CALIBRATED FL.....	1
12	PAHZZ	5306008193038	84760	11331	BOLT,MACHINE.....	2
13	PAHZZ	5331006418283	84760	405	O-RING PART OF KIT P/N 30405.....	1
14	PAHZZ	5310013181883	84760	23585	NUT,PLAIN HEXAGON.....	1
15	PAHZZ	5307013176317	84760	26495	STUD,BALL.....	1
16	PAHZZ	5340014159633	84760	26961	CAP,PROTECTIVE.DUST.....	1
17	PAHZZ	5325008042027	96906	MS16624-1093	RING,RETAINING PART OF KIT P/N 30405.....	1
18	PAHZZ	3120003934067	84760	20222	BEARING,WASHER THRU.....	1
19	PAHZZ	2910011777252	84760	21312	SLEEVE,GOVERNOR THR.....	1
* 20	PAHZZ	5325005981428	84760	10445	RING,RETAINING PART OF KIT P/N 30405.....	1
21	XAHZZ		84760	28861	HOUSING.....	1
22	PAHZZ	5315008871539	84760	11141	PIN,STRAIGHT HEADLE.....	2
23	PAHZZ	3040011883242	84760	24569	SHOE,CAM ROLLER.....	2
24	PAHZZ	5340011598534	84760	11067	PLUNGER,DETENT STANDARD,.290 A,6.5 LITER.....	2
24	PAHZZ	5340011598535	84760	11068	PLUNGER,DETENT STANDARD,.290 B,6.5 LITER.....	2
24	PAHZZ	5340011598536	84760	11069	PLUNGER,DETENT STANDARD,.290 C,6.5 LITER.....	2
24	PAHZZ	3120012395132	75160	11070	BUSHING,SLEEVE STANDARD,.290 D,6.5 LITER.....	2
24	PAHZZ	5340014159627	84760	11072	PLUNGER,DETENT OVERSIZE,.002 A,6.5 LITER.....	2
24	PAHZZ	5340014334750	84760	11073	PLUNGER,DETENT OVERSIZE,.002 B,6.5 LITER.....	2
24	PAHZZ	5340014334752	84760	11074	PLUNGER,DETENT OVERSIZE,.002 C,6.5 LITER.....	2
24	PAHZZ	5340014159628	84760	11075	PLUNGER,DETENT OVERSIZE,.002 D,6.5 LITER.....	2
25	PFHZZ	2910014145382	84760	31056	HEAD AND ROTOR ASSE.....	1
26	PAHZZ	5331012360476	0CTH1	3921937	O-RING PART OF KIT P/N 30405.....	1
27	PAHZZ	5310012666425	84760	26027	WASHER,FLAT PART OF KIT P/N 30405..	1

(1) ITEM NO	(2) SMR CODE	(3) NSN	(4) CAGEC	(5) PART NUMBER	(6) DESCRIPTION AND USABLE ON CODES(UOC)	(7) QTY
28	PAHZZ	5340014140247	84760	29384	PLATE,MOUNTING.....	1
29	PAHZZ	5305011910374	84760	29710	SCREW,MACHINE.....	1
30	PAHZZ	5305011886567	84760	23124	SCREW.....	1
31	PAHZZ	2910011918464	84760	26070	STOP,VALVE PART OF KIT P/N 30405....	1
32	PAHZZ	5360012605649	84760	26071	SPRING,HELICAL,COMP.....	1
33	PAHZZ	4820013162497	84760	28012	VALVE,CHECK STANDARD.....	1
33	PAHZZ	4820013170552	84760	28013	VALVE,CHECK.....	1
34	PAHZZ	5305002073984	84760	11175	SCREW,CAP,SOCKET HE.....	1
35	PAHZZ	5360011886806	84760	23238	SPRING,FLAT.....	1
36	PAHZZ	5331012360475	84760	27245	O-RING PART OF KIT P/N 30405.....	1
37	PAHZZ	2910011883243	84760	27833	CAM RING,FUEL INJEC STANDARD.....	1
37	PAHZZ	3040011924585	84760	23120	CAM,CONTROL OVERSIZE.....	1
38	PAHZZ	2990013208915	84760	27984	RETAINER ASSEMBLY,G.....	1
39	PAHZZ	3040011883261	84760	21201	WEIGHT,COUNTERBALAN.....	6
40	PAHZZ	5305011880948	84760	21194	SCREW,MACHINE.....	2
41	PFHZZ	5340011883176	84760	23107	COVER,ACCESS.....	1
42	PAHZZ	5330012332848	0CTH1	3921935	GASKET PART OF KIT P/N 30405.....	1
43	PFHZZ	2910012106938	84760	26890	PILOT TUBE,PUMP.....	1
44	PFHZZ	3120009934152	84760	15093	BUSHING,SLEEVE.....	2
45	PAHZZ	5305011880489	34623	5740572	SCREW ASSY.,VENT GOVERNOR,#0.....	1
45	PAHZZ	5305011880490	84760	21661	SCREW,ASSY. VENT GOVERNOR,#1.....	1
45	PAHZZ	5305011880491	84760	21662	SCREW ASSY.,VENT GOVERNOR,#2.....	1
45	PAHZZ	5305011880492	84760	21663	SCREW ASSY. VENT GOVERNOR,#3.....	1
45	PAHZZ	5305011880493	84760	21664	SCREW ASSY. VENT GOVERNOR,#4.....	1
45	PAHZZ	5305011880494	84760	21665	SCREW ASSY. VENT GOVERNOR,#5.....	1
45	PAHZZ	5305011886566	84760	22734	SCREW GOVERNOR,#2.5.....	1

END OF FIGURE

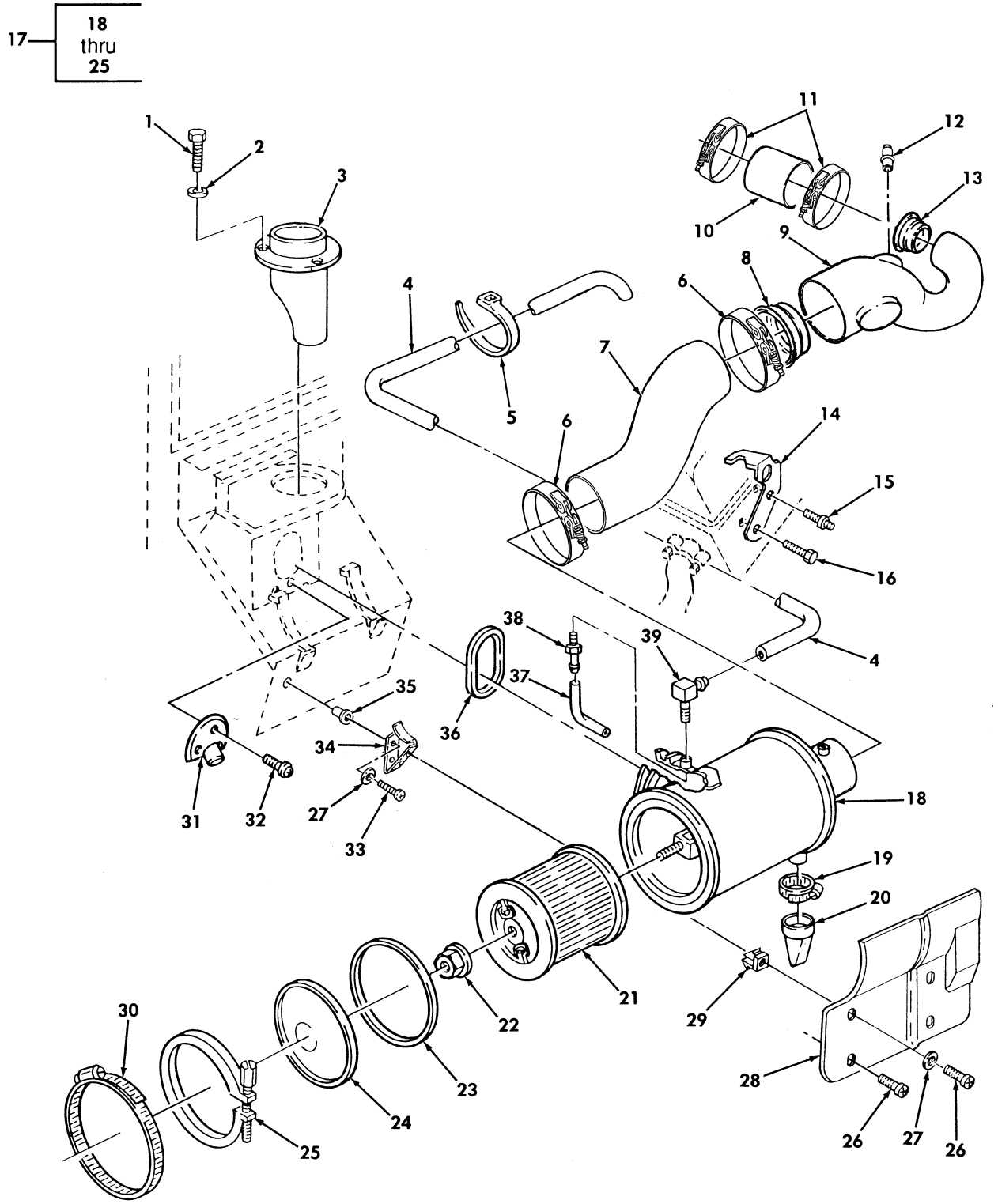

Figure 25. Air Cleaner, Air Horn, and Related Parts (Sheet 1 of 2).

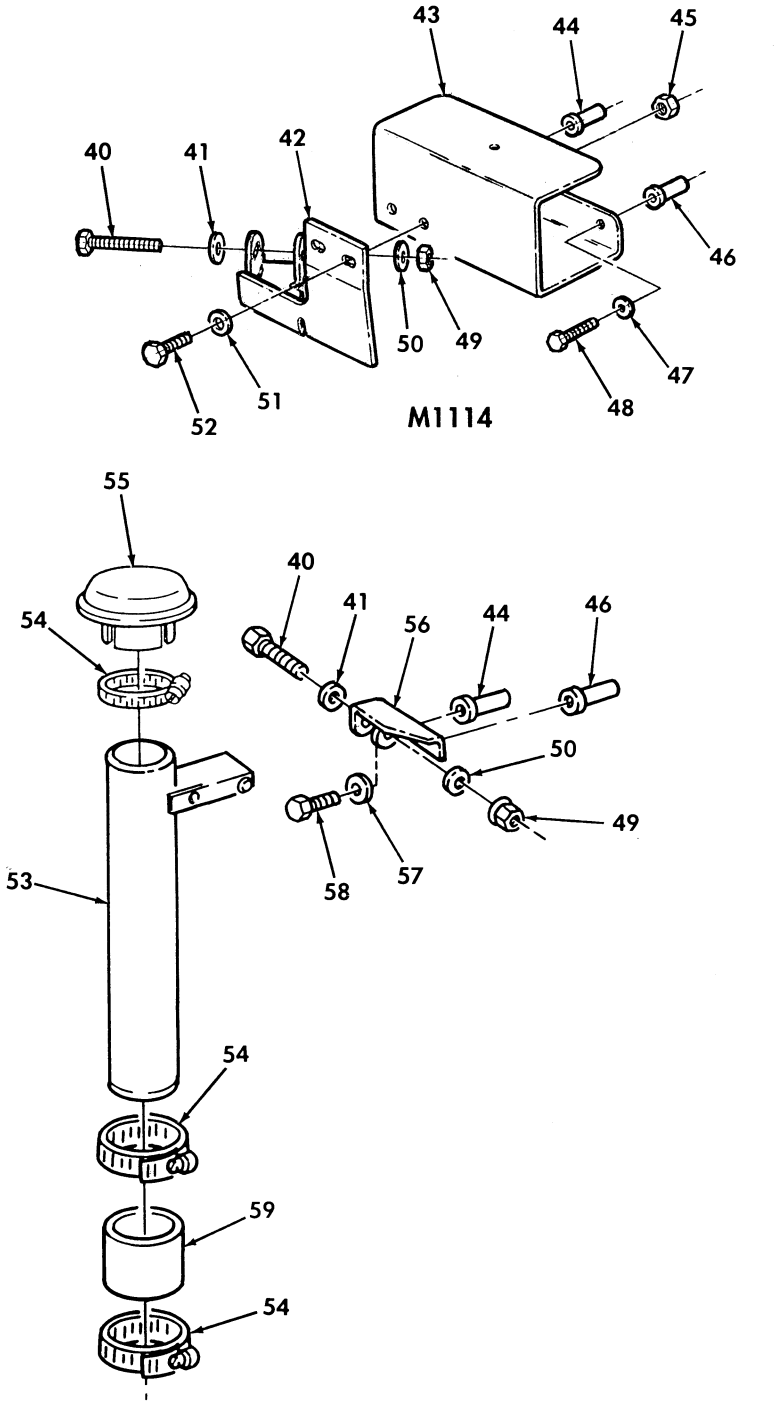

Figure 25. Air Cleaner, Air Horn, and Related Parts (Sheet 2 of 2).

(1) ITEM NO	(2) SMR CODE	(3) NSN	(4) CAGEC	(5) PART NUMBER	(6) DESCRIPTION AND USABLE ON CODES(UOC)	(7) QTY
					GROUP 0304 AIR CLEANER	
					FIG. 25 AIR CLEANER,AIR HORN,AND RELATED PARTS	
1	PAOZZ	5305007122507	80204	B1821BH025C044N	SCREW,CAP,HEXAGON H 1/4-20 X .4375.	3
2	PAOZZ	5310008094058	96906	MS27183-10	WASHER,FLAT 1/4.....	3
3	PAOZZ	2940011883224	19207	12338373	SHIELD ASSEMBLY AIR INTAKE.....	1
* 4	MOOZZ		19207	CPR104420-1-29	TUBE,METALLIC MAKE FROM TUBING,P/N CPR104420-1,29 INCHES LONG.....	1
* 5	PAOZZ	5975000742072	81343	MS3367-1-9	STRAP,TIEDOWN ELECT.....	1
6	PAOZZ	4730014785151	63208	667-69	CLAMP,HOSE.....	2
* 7	PAOZZ	4720012037789	34623	5584588	HOSE,PREFORMED.....	1
8	PAOZZ	2590014582609	34623	12469073-2	INSERT,AIR HORN 2.00-3.88.....	1
9	PAOZZ	4720014557861	19207	12469074	HOSE,PREFORMED.....	1
10	PAOZZ	4720014559981	34623	5934807	HOSE,NONMETALLIC.....	1
11	PAOZZ	4730014735537	63208	667-43	CLAMP,HOSE.....	2
12	PAOZZ	4730011647028	7X677	14050444	ADAPTER,STRAIGHT TU.....	1
13	PAOZZ	2590014950534	19207	12469073-1	INSERT,AIR HORN 1.75-2.38.....	1
14	PFOZZ	5340011899861	34623	5590657	BRACE,CORNER.....	1
15	PAOZZ	5307011509538	15946	22515630	STUD,SHOULDERED 10-1.5 X 20 MM.....	1
16	PAOZZ	5306011589917	1FH08	DIN933M10X20	BOLT,MACHINE 10-1.5 X 20 MM.....	1
* 17	PAOOO	2940011885117	19207	12339911	AIR CLEANER,INTAKE.....	1
18	XAOZZ		78940	L-111DR30-L	.BODY ASSEMBLY.....	1
19	PAOZZ	4730014619362	19207	11608950-14	.CLAMP,HOSE.....	1
20	PAOZZ	2520010241273	78940	L-638C2GS	.BOOT,DUST AND MOIST.....	1
* 21	PAOZZ	2940011883776	19207	12342870	.FILTER ELEMENT,INTA.....	1
22	PAOZZ	5310012115037	78940	0-952A59	.NUT,PLAIN HEXAGON 5/16-18.....	1
23	PAOZZ	5330014522474	34623	12342872	.GASKET.....	1
* 24	PAOZZ	2940011883387	19207	12342869	.COVER,AIR CLEANER.....	1
* 25	PAOZZ	5340013601758	3ES68	L-223C26	.CLAMP,LOOP.....	1
* 26	PAOZZ	5305009846212	80205	MS35206-265	SCREW,MACHINE #10-24 X .750.....	4
* 27	PAOZZ	5310014177333	6W728	4397005-008	WASHER,FLAT..... UOC:XBB	6
* 28	PAOZZ	2540011964726	19207	12338863	SHIELD,AIR CLEANER..... UOC:XAA	1
* 28	PAOZZ	2590014345153	6W728	4660738	BRACKET,VEHICULAR C..... UOC:XBB	1
* 29	PAOZZ	5340012088688	02768	242-180602-90-01 01	SHIELD,EXPANSION..... UOC:XAA	4
30	PAOZZ	4730012105785	7Z588	HTM-1200	CLAMP,HOSE.....	3
31	PAOZZ	5342011877029	19207	12338842	BRACKET,TUBE DRAINA.....	1
32	PAOZZ	5305002267237	80205	MS16995-78	SCREW,CAP,SOCKET HE #8-18 X .375...	3
* 33	PAOZZ	5305009897434	96906	MS35207-263	SCREW,MACHINE #10-32 X .500..... UOC:XBB	4
* 34	PAOZZ	5340014324471	6W728	4660737	PLATE,MOUNTING..... UOC:XBB	2
35	PAOZZ	5310014691183	6W728	4397050-022	NUT,PLAIN BLIND RIV #10-32.....	4
36	PAOZZ	5330011880911	19207	12338379	GASKET.....	1
37	PAOZZ	4720012145757	19207	12340799	TUBING,NONMETALLIC.....	1
* 38	PAOZZ	4730011855348	79470	1068X4	ADAPTER,STRAIGHT PI.....	1

(1) ITEM NO	(2) SMR CODE	(3) NSN	(4) CAGEC	(5) PART NUMBER	(6) DESCRIPTION AND USABLE ON CODES(UOC)	(7) QTY
39	PAOZZ	4730010707680	79470	1069X6X2	ELBOW,PIPE TO HOSE.....	1
40	PAOZZ	5305000695578	80205	MS90725-94	SCREW,CAP,HEXAGON H 7/16-14 X 2.75.	1
41	PAOZZ	5310008094085	96906	MS27183-16	WASHER,FLAT 7/16.....	1
42	PAOZZ	2590014558986	19207	12469075	BRACKET,VEHICULAR C..... UOC:XBB	1
43	PAOZA	5340014566554	19207	12460300	BRACKET,MULTIPLE AN..... UOC:XBB	1
44	PAOZZ	5310012317455	19207	12339397-3	NUT,PLAIN,BLIND RIV 1/4-20.....	1
45	PAOZZ	5310009359021	96906	MS51943-35	NUT,SELF-LOCKING HE 3/8-16..... UOC:XBB	2
46	PAOZZ	5310013885206	19207	12339397-6	NUT,PLAIN,BLIND RIV 1/4-20.....	1
* 47	PAOZZ	5310006379541	80205	MS35338-46	WASHER,LOCK 3/8..... UOC:XBB	2
48	PAOZZ	5305000712509	80204	B1821BH025C150N	SCREW,CAP,HEXAGON H 1/4-20 X 1.50.. UOC:XBB	2
49	PAOZZ	5310014624393	24617	9442937	NUT,PLAIN,HEXAGON HE 7/16-14.....	1
50	PAOZZ	5310008094085	96906	MS27183-16	WASHER,FLAT 7/16.....	1
51	PAOZZ	5310000806004	96906	MS27183-14	WASHER,FLAT 3/8.....	2
52	PAOZZ	5305008434372	80204	B1821BH038C075N	SCREW,CAP,HEXAGON H 3/8-16 X .750.	2
53	PAOZZ	2510014589496	19207	1246072G1	STACK ASSEMBLY,AIR.....	1
54	PAOZZ	4730012969318	19207	11608950-18	CLAMP,HOSE.....	3
* 55	PAOZZ	2940011891809	19207	12338377	CAP,AIR CLEANER INT.....	1
56	PAOZZ	5340012389543	19207	12339832	BRACKET,MOUNTING..... UOC:XBB	1
57	PAOZZ	5310008775975	19207	10918603	WASHER,FLAT 1/4..... UOC:XAA	2
58	PAOZZ	5305000680509	80204	B1821BH025C125N	SCREW,CAP,HEXAGON H 1/4-20 X 1.25.. UOX:XAA	2
59	PAOZZ	4720014557664	19207	12469071	HOSE,NONMETALLIC.....	1

END OF FIGURE

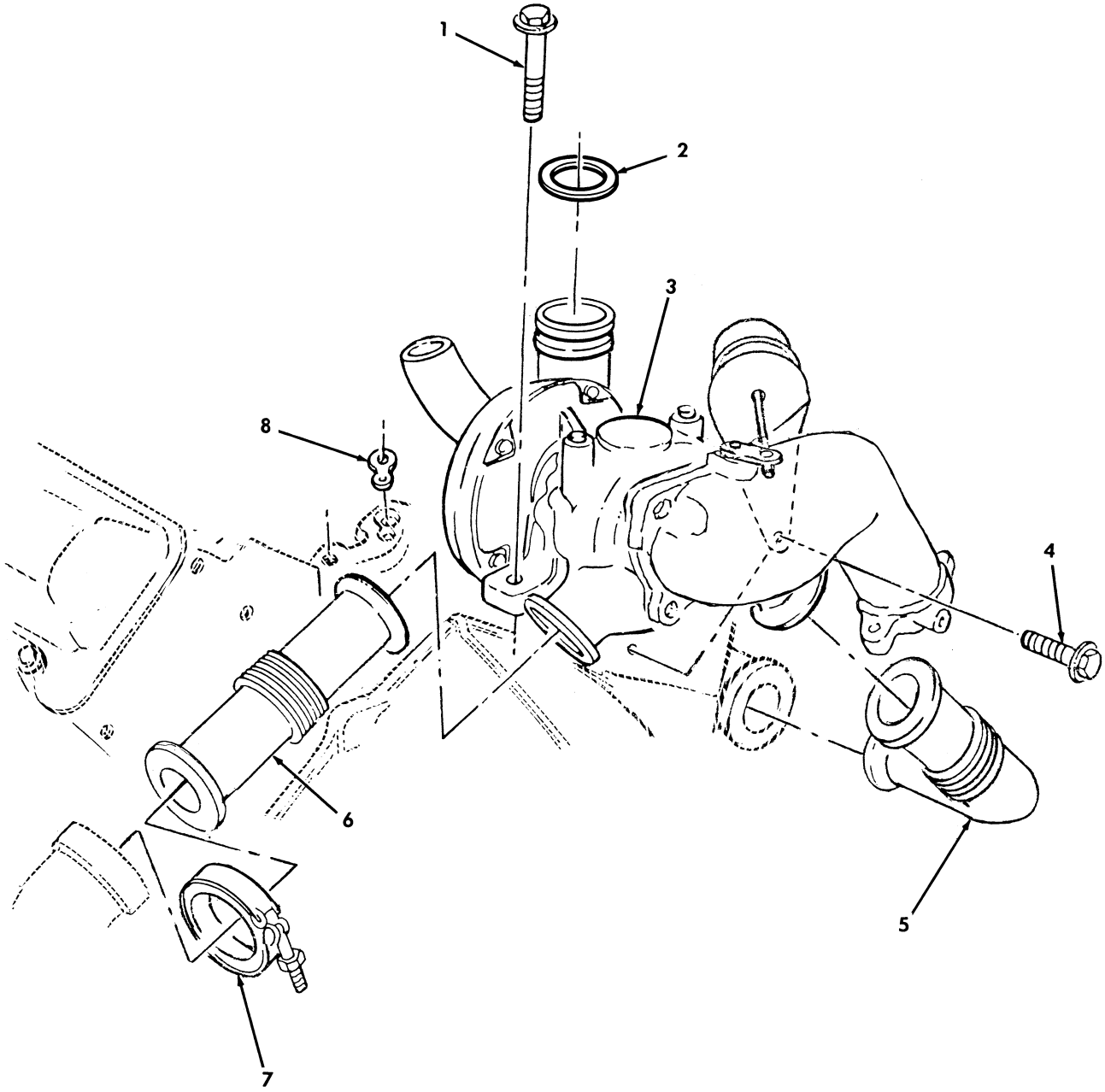

Figure 26. Turbocharger Assembly.

(1) ITEM NO	(2) SMR CODE	(3) NSN	(4) CAGEC	(5) PART NUMBER	(6) DESCRIPTION AND USABLE ON CODES(UOC)	(7) QTY
					GROUP 0305 TURBOCHARGER ASSEMBLY	
					FIG. 26 TURBOCHARGER ASSEMBLY	
1	PAFZZ	5306014919410	7X677	11508475	BOLT,MACHINE.....	2
2	PAFZZ	5331014728177	7X677	12456133	SEAL.....	1
3	PAFZZ	2950014398169	7X677	12532429	TURBOSUPERCHARGER,E.....	1
4	PAFZZ	5305013976850	24617	11502685	SCREW,CAP,HEXAGON H.....	1
5	PAFZZ	2990014371020	7X677	10239025	PIPE,EXHAUST R.H.....	1
6	PAFZZ	2990014371022	7X677	10239026	PIPE,EXHAUST L.H.....	1
7	PAFZZ	5340014374983	7X677	12553155	CLAMP,LOOP.....	4
8	PAFZZ	5330014841471	7X677	12561306	SEAL.....	1

END OF FIGURE

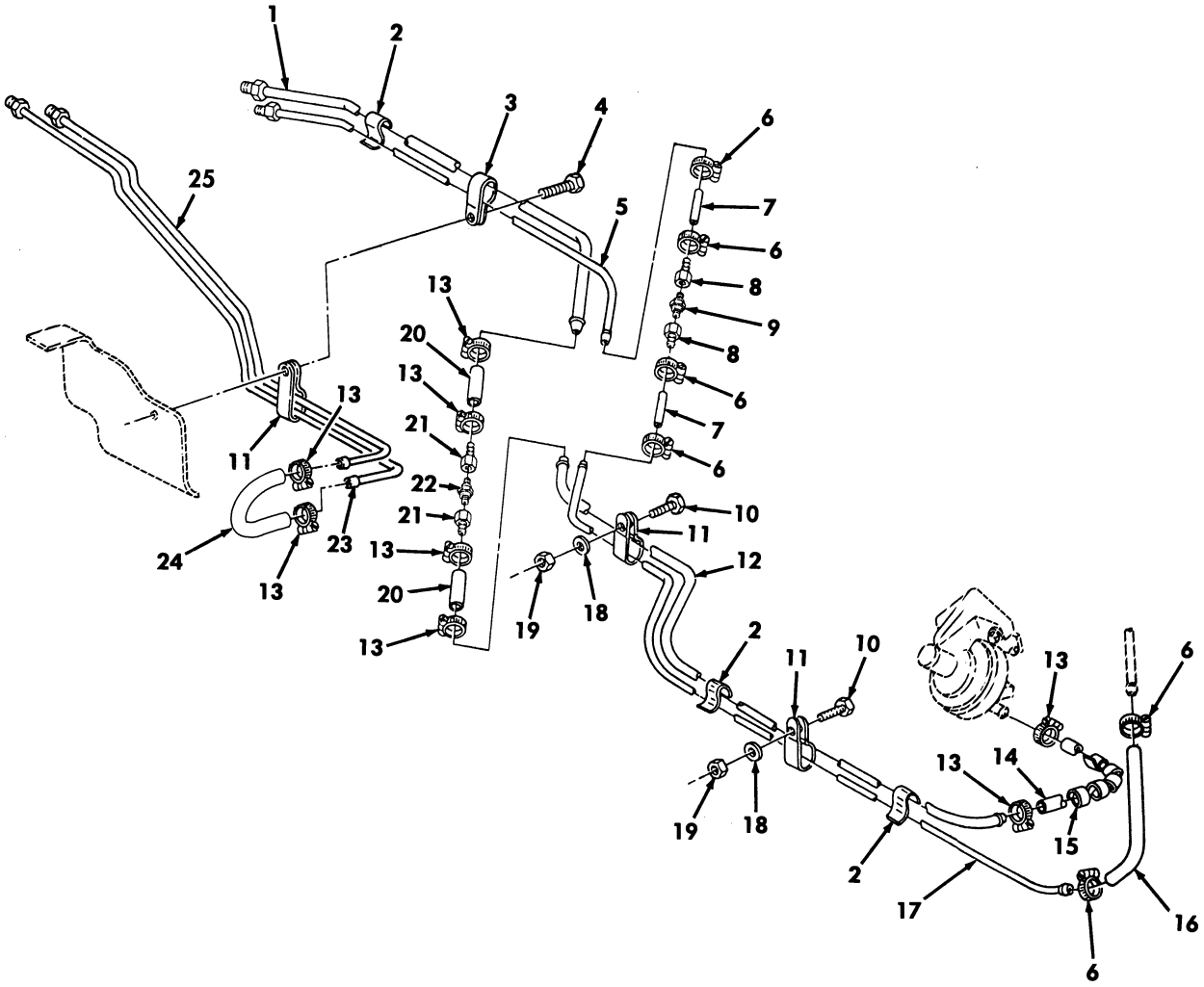

Figure 27. Fuel Tank Supply and Return Lines.

(1) ITEM NO	(2) SMR CODE	(3) NSN	(4) CAGEC	(5) PART NUMBER	(6) DESCRIPTION AND USABLE ON CODES(UOC)	(7) QTY
					GROUP 0306 TANKS,LINES,FITTINGS HEADERS	
					FIG. 27 FUEL TANK SUPPLY AND RETURN LINES	
1	PAOZZ	4710014120273	34623	12342949	TUBE ASSEMBLY,METAL.....	1
2	PAOZZ	5340011870892	19207	12339890	CLIP,SPRING TENSION 3/8 X 1/4.....	3
3	PAOZZ	5340010174630	12603	30H-18	CLAMP,LOOP.....	3
4	PAOZZ	5305012111450	7X677	9415857	SCREW,MACHINE 1/4-20 X 5/8.....	1
5	PAOZZ	4710014131360	34623	12342950	TUBE ASSEMBLY,METAL.....	1
6	PAOZZ	4730011188278	76599	MMF4-SS	CLAMP,HOSE.....	6
7	MOOZZ		19207	12338560-3	HOSE,FUEL RETURN MAKE FROM HOSE P/N 9438257, 2.25 INCHES LONG.....	2
8	PAOZZ	4730014125216	34623	12342951-1	ADAPTER,STRAIGHT,PI.....	2
9	PAOZZ	4820014304132	91816	2269B-2MM-.5	VALVE,CHECK.....	1
* 10	PAOZZ	5305012067219	24617	9426241	SCREW,TAPPING 1/4-20 X 3/4.....	2
11	PAOZZ	5340014566557	19207	12339660	STAP,RETAINING.....	3
12	PAOZZ	4710011876759	34623	5584024	TUBE,BENT METALLIC.....	1
* 13	PAOZZ	4730000243971	81646	62606	CLAMP,HOSE.....	8
14	MOOZZ		34623	5578910	HOSE, MAKE FROM HOSE P/N 9438373 7.75 INCHES LONG.....	1
15	MOOZZ		81349	B47287-II-1/2-3	TUBING,PLASTIC,SPIR MAKE FROM TUBING P/N B47287-II-1/2, 3 INCHES LONG.....	1
16	MOOZZ		34623	5939878	TUBE,FUEL RETURN MAKE FROM HOSE,P/N 9432857, 9 INCHES LONG.....	1
17	PAOZZ	4710011860665	34623	5584203	TUBE,BENT METALLIC.....	1
18	PAOZZ	5310011023270	24617	2436161	WASHER,FLAT 1/4.....	2
19	PAOZZ	5310000614650	96906	MS51943-31	NUT,SELF-LOCKING HE 1/4-20.....	2
20	MOOZZ		19207	12338561-2	HOSE,FUEL SUPPLY MAKE FROM HOSE P/N 9438373,2.25 INCHES LONG.....	2
21	PAOZZ	4730014125213	34623	12342951-2	ADAPTER,STRAIGHT,PI.....	2
22	PAOZZ	4820011736883	91816	2269B-2MM-3	VALVE,CHECK.....	1
23	PAOZZ	4710013582127	19207	12342748	TUBE ASSEMBLY,METAL.....	1
* 24	MOOZZ		24617	9438218	HOSE,NONMETALLIC MAKE FROM HOSE P/N 9439402 6.3 INCHES LONG.....	1
* 25	PAOZZ	4710013586397	19207	12342747	TUBE ASSEMBLY,METAL.....	1

END OF FIGURE

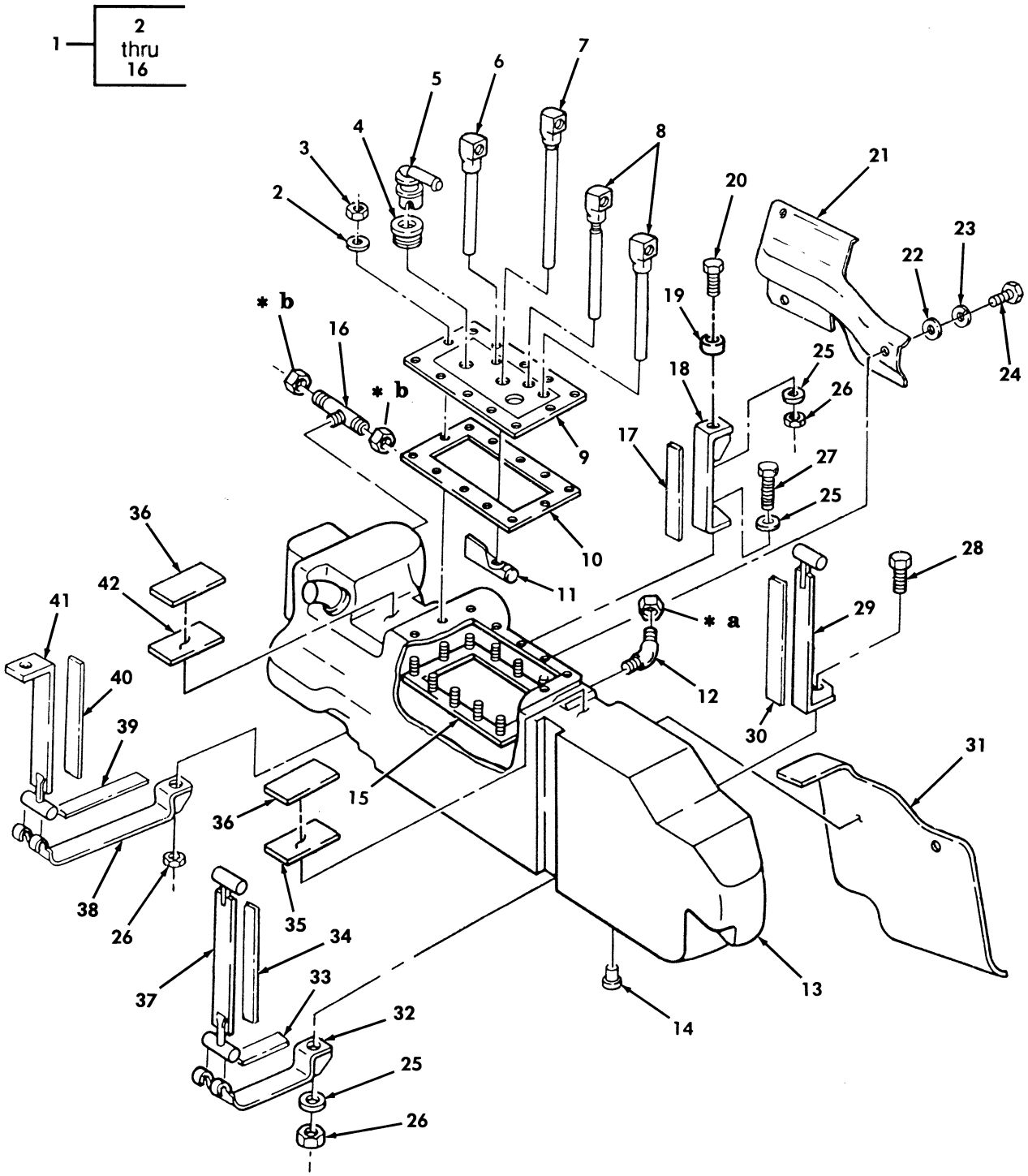

Figure 28. Fuel Tank Assembly and Mounting Straps.

(1) ITEM NO	(2) SMR CODE	(3) NSN	(4) CAGEC	(5) PART NUMBER	(6) DESCRIPTION AND USABLE ON CODES(UOC)	(7) QTY
					GROUP 0306 TANKS,LINES,FITTINGS HEADERS	
					FIG. 28 FUEL TANK ASSEMBLY AND MOUNTING STRAPS	
* 1	PAOOO	2910014112124	34623	12460104	TANK,FUEL,ENGINE.....	1
2	PAOZZ	5310011023270	24617	2436161	.WASHER,FLAT 1/4.....	12
3	PAOZZ	5310000614650	96906	MS51943-31	.NUT,SELF-LOCKING,HE 1/4-20.....	12
* 4	PAOZZ	5325012102870	57526	F6TZ9B076A-A	.GROMMET,NONMETALLIC.....	1
5	PAOZZ	4820012103488	96152	346-786	.VALVE,VENT.....	1
6	PAOZZ	4710013592956	19207	12338548-2	.TUBE ASSEMBLY,METAL.....	1
7	PFOZZ	4710011886050	34623	5574872	.TUBE ASSEMBLY,METAL.....	1
8	PFOZZ	4710011869617	19207	12338549	.TUBE ASSEMBLY,METAL.....	2
9	PFOZZ	2910011842159	19207	12338567	.PLATE ASSEMBLY,FUEL.....	1
10	PAOZZ	5330011940473	19207	12338585	.GASKET.....	1
11	PAOZZ	4730011898854	80463	25055210	.STRAINER BODY,SEDIM.....	1
12	PAOZZ	4730010912809	81343	8-6 100302BA	.ELBOW,PIPE TO TUBE.....	1
13	PAOZZ	2910014473911	34623	12460105	.TANK,FUEL,ENGINE.....	1
14	PAOZZ	5340012445765	34623	5597286	.PLUG,PROTECTIVE,DUS.....	1
15	PFOZZ	2910011866038	34623	5584341	.RETAINER,FUEL TANK.....	1
16	PAOZZ	4730011196895	93061	272NTA-8-6	.TEE,PIPE TO TUBE.....	1
17	MOOZZ		19207	12460108-5	SEAL,NONMETALLIC CH MAKE FROM SEAL,P/N 12460108-3, 5.50 INCHES LONG.....	1
18	PAOZZ	5340011869606	19207	12338568	BAND,RETAINING.....	1
* 19	PAOZZ	5365014560730	34623	12469055	SPACER,RING.....	2
20	PAOZZ	5305007252317	80204	B1821BH038C150N	SCREW,CAP,HEXAGON H 3/8-16 X 1.00..	2
21	PAOZZ	2510014443360	34623	12460143	SHIELD,SAFETY,FUEL.....	1
22	PAOZZ	5310008094058	96906	MS27183-10	WASHER,FLAT.....	3
23	PAOZZ	5310006379541	96906	MS35338-46	WASHER,LOCK.....	3
24	PAOZZ	5305012111450	7X677	9415857	SCREW,MACHINE 1/4-28 X .62.....	3
25	PAOZZ	5310014124013	24617	2436163	WASHER,FLAT 3/8.....	6
26	PAOZZ	5310007610654	96906	MS51967-9	NUT,PLAIN,HEXAGON 3/8-16.....	4
27	PAOZZ	5306014112338	19207	12460145-1	BOLT,MACHINE 3/8-16 X 2.25.....	1
28	PAOZZ	5306014112339	34623	6000351	BOLT,MACHINE 3/8-16 X 2.00.....	2
29	PAOZZ	5340014085851	34623	6000300	BAND,RETAINING INNER,FRONT.....	1
30	MOOZZ		34623	6000333	SEAL,NONMETALLIC CH MAKE FROM SEAL,P/N 12460108-3,9.20 INCHES LONG.....	1
31	PAOZZ	2910014120047	34623	12460102	SHIELD,FUEL TANK.....	1
32	PAOZZ	5340011910748	19207	12338571	BAND,RETAINING BOTTOM,FRONT.....	1
33	MOOZZ		34623	6000334	SEAL,NONMETALLIC CH MAKE FROM SEAL,P/N 12460108-3,7.70 INCHES LONG.....	1
34	PAOZZ	5330014091981	34623	6000332	SEAL,NONMETALLIC CH FRONT.....	1
35	PAOZZ	5330011867757	19207	12338557-1	RUBBER STRIP.....	2
36	PAOZZ	5365014565637	34623	6007339	SPACER,PLATE.....	2
37	PAOZZ	5340011910746	34623	5582412	BAND,RETAINING OUTER,FRONT.....	1
38	PAOZZ	5340011905100	19207	12338574	STRAP,RETAINING BOTTOM REAR.....	1
39	PAOZZ	5330014109840	34623	6000331	SEAL,NONMETALLIC CH REAR.....	1
40	PAOZA	5330014200705	34623	6000329	SEAL,NONMETALLIC CH REAR.....	1
41	PAOZZ	5340011930251	19207	12338575	BRACKET,ANGLE OUTER,REAR.....	1

(1) ITEM NO	(2) SMR CODE	(3) NSN	(4) CAGEC	(5) PART NUMBER	(6) DESCRIPTION AND USABLE ON CODES(UOC)	(7) QTY
42	PAOZZ	5330011875148	19207	12338557-2	RUBBER STRIP.....	2

END OF FIGURE

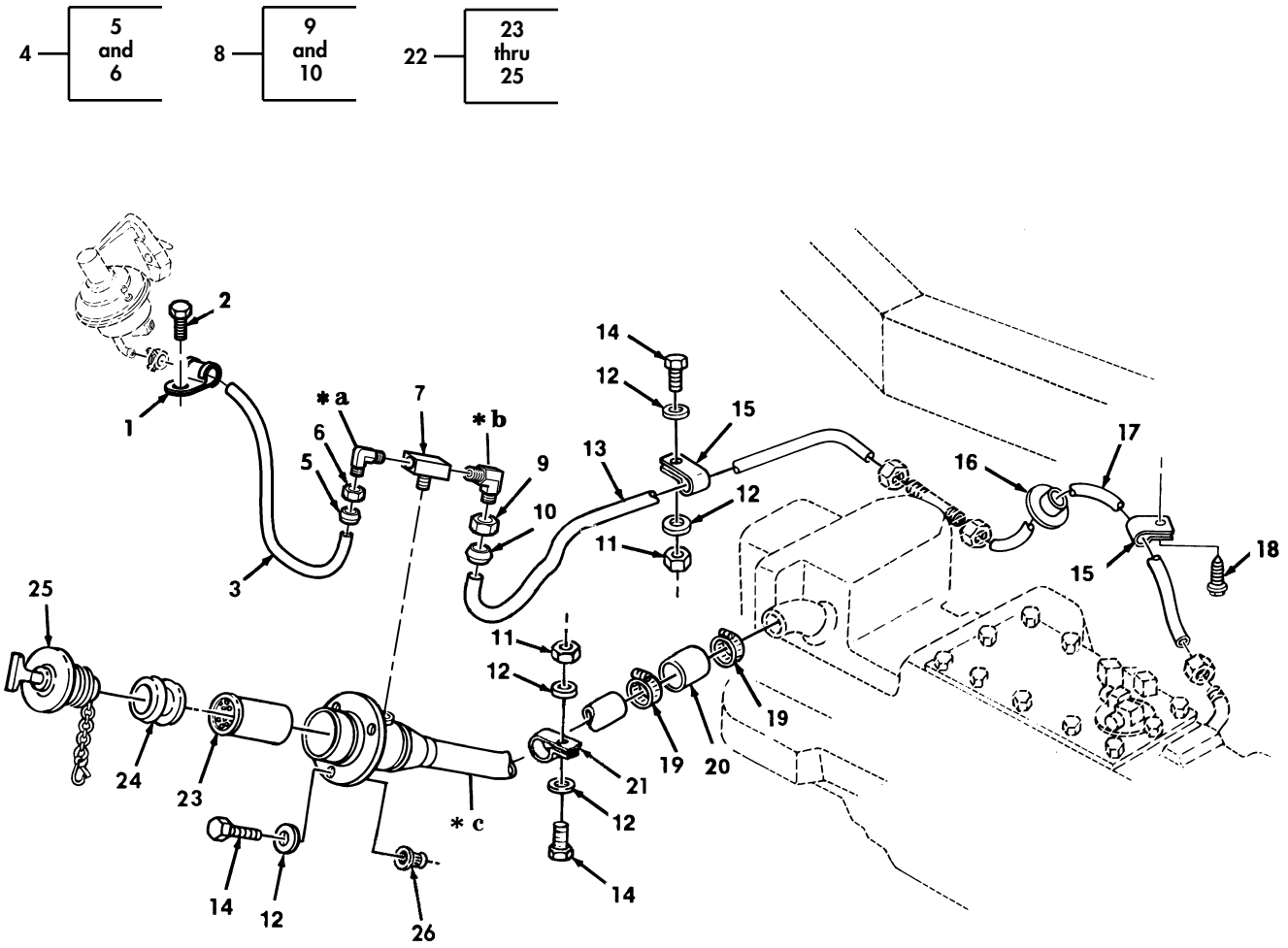

✱ **a** PART OF ITEM 4
✱ **b** PART OF ITEM 8
✱ **c** PART OF ITEM 22

Figure 29. Fuel Filler Pipe Assembly and Vent Lines.

(1) ITEM NO	(2) SMR CODE	(3) NSN	(4) CAGEC	(5) PART NUMBER	(6) DESCRIPTION AND USABLE ON CODES(UOC)	(7) QTY
					GROUP 0306 TANKS,LINES,FITTINGS HEADERS	
					FIG. 29 FUEL FILLER PIPE ASSEMBLY AND VENT LINES	
* 1	PAOZZ	5340009891771	80205	MS21333-123	CLAMP,LOOP.....	1
* 2	PAOZZ	5305013936311	24617	271153	SCREW,TAPPING 3/8-16 X 3/4.....	1
* 3	MOOZZ		19207	CPR104420-2-129	TUBE MAKE FROM HOSE P/N J844TYBSIZE3/8BLACK,129 INCHES LONG....	1
* 4	PAOZZ	4730012741825	81343	6-6 100202BA	ELBOW,PIPE TO TUBE.....	1
* 5	PAOZZ	4730010485260	81343	6 100115B	.SLEEVE,COMPRESSION.....	1
* 6	PAOZZ	4730010487873	81343	6 100110B	.NUT,TUBE COUPLING.....	1
* 7	PAOZZ	4730001257979	81343	6-6-6-130425B	TEE.....	1
* 8	PAOZZ	4730010957717	81343	8-6-100202BA	ELBOW,PIPE TO TUBE.....	2
* 9	PAOZZ	4730010487874	81343	8 100110B	.NUT,TUBE COUPLING.....	1
* 10	PAOZZ	4730010491559	81343	8 100115B	.SLEEVE,COMPRESSION.....	1
* 11	PAOZZ	5310000614650	96906	M45913/3-4CG8C	NUT,SELF-LOCKING,HE 1/4-20.....	2
* 12	PAOZZ	5310011023270	24617	2436161	WASHER,FLAT 1/4.....	7
* 13	MOOZZ		19207	CPR104420-3	TUBE MAKE FROM HOSE P/N PFT-88-BLK-100,44 INCHES LONG.....	1
* 14	PAOZZ	5305000680508	80204	B1821BH025C075N	SCREW,CAP HEXAGON H 1/4-20 X 3/4...	5
* 15	PAOZZ	5340009848540	96906	MS21333-102	CLAMP,LOOP.....	2
* 16	PAOZZ	5975012113142	28520	SB-750-625-2840	BUSHING,ELECTRICAL.....	1
* 17	MOOZZ		34623	5573534	HOSE MAKE FROM HOSE P/N PFT-88-BLK-100,27 INCHES LONG.....	1
* 18	PAOZZ	5305012067219	92871	9426241	SCREW,TAPPING 1/4-14 X 1/2..... UOC:XBB	1
* 19	PAOZZ	4730009098627	76599	36HSS	CLAMP,HOSE.....	2
* 20	PAOZZ	4720012128269	19207	12338551-2	HOSE,NONMETALLIC.....	1
* 21	PAOZZ	5340012100692	75272	COV-3311	CLAMP,LOOP.....	1
* 22	PFOZZ	2590014334219	19207	12469190	FILLER NECK.....	1
* 23	PAOZZ	4730013224294	19207	12342096	.STRAINER ELEMENT,SE.....	1
* 24	PAOZZ	5325011940562	34623	12339296	.GROMMET,NONMETALLIC.....	1
* 25	PAOZZ	5342012461120	19207	12338558-1	.CAP,FILLER OPENING.....	1
* 26	PAOZZ	5310014113422	78276	ALS4-420-165	NUT,PLAIN BLIND RIV 1/4-20.....	3

END OF FIGURE

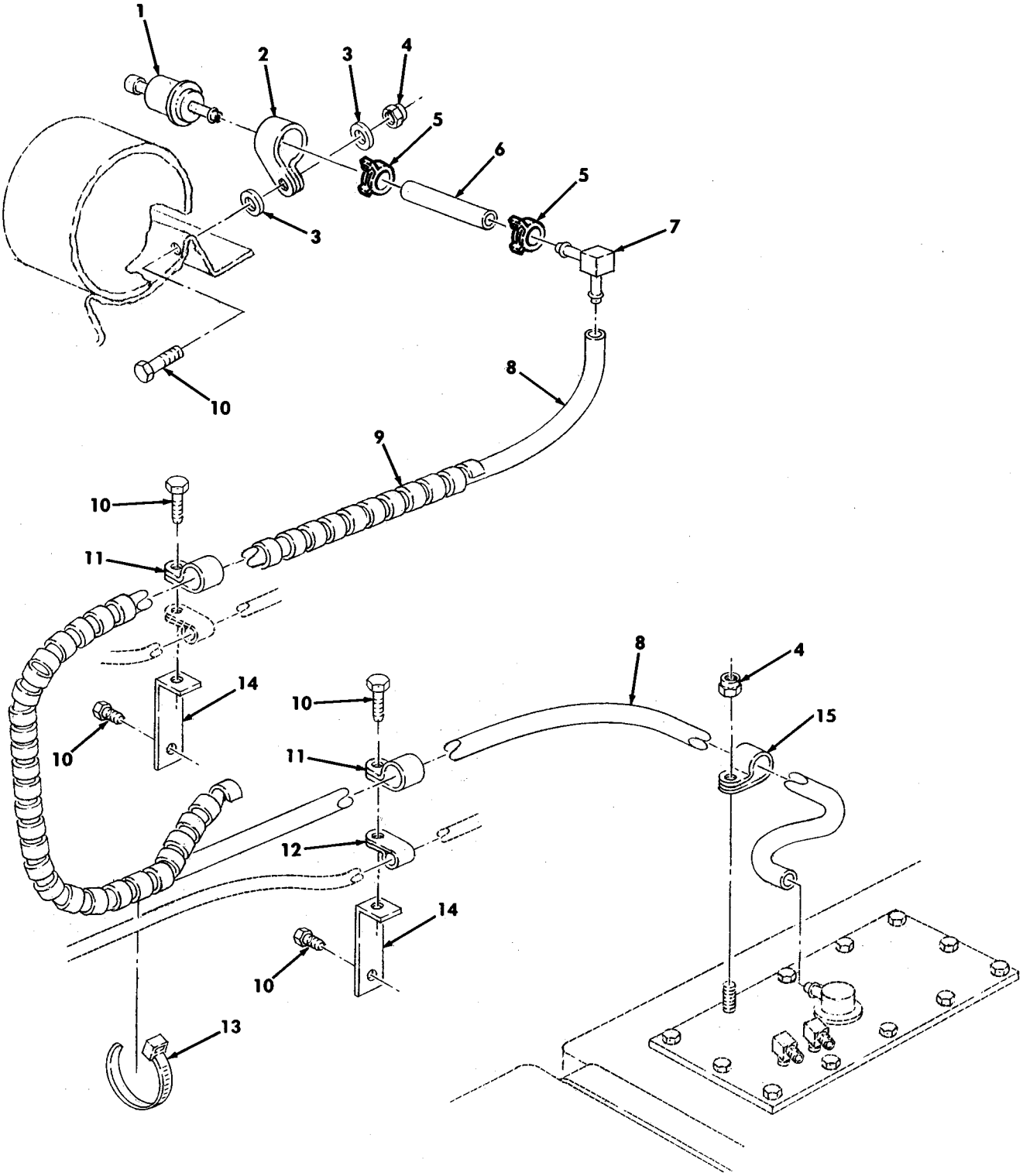

Figure 30. Fuel Tank Vent Line, Filter, and Mounting Hardware.

(1) ITEM NO	(2) SMR CODE	(3) NSN	(4) CAGEC	(5) PART NUMBER	(6) DESCRIPTION AND USABLE ON CODES(UOC)	(7) QTY
					GROUP 0306 TANKS,LINES,FITTINGS HEADERS	
					FIG. 30 FUEL TANK VENT LINE,FILTER, AND MOUNTING HARDWARE	
1	PAOZZ	2910012105872	19207	12339208	FILTER,FLUID.....	1
2	PAOZZ	5340011018262	75272	COV-1309	CLAMP,LOOP.....	1
3	PAOZZ	5310008238804	96906	MS27183-9	WASHER,FLAT 3/4.....	1
* 4	PAOZZ	5310000614650	96906	M45913/3-4CG8C	NUT,SELF-LOCKING,HE 1/4-20.....	1
5	PAOZZ	4730011888278	7Z588	6704	CLAMP,HOSE SIZE #4.....	2
* 6	MOOZZ		19207	12339981-6	TUBE,NONMETALLIC MAKE FROM HOSE P/N RB1450-1-4 IDX1-20D,2 INCHES LONG...	1
* 7	PAOZZ	4730012110896	19207	12339979-2	ELBOW,HOSE.....	1
* 8	MOOZZ		34623	5594083	TUBE,NONMETALLIC MAKE FROM HOSE P/N PFT-6B,91 INCHES LONG.....	1
9	MOOZZ		34623	6005714	INSULATION,SLEEVING MAKE FROM SPIRAL WRAP P/N 475121028,37 INCHES LONG.....	1
* 10	PAOZZ	5305000680501	80205	MS90725-5	SCREW,CAP,HEXAGON H 1/4-20 X 5/8...	5
* 11	PAOZZ	5340009891771	80205	MS21333-123	CLAMP,LOOP.....	2
* 12	PAOZZ	5340007255280	80205	MS21333-125	CLAMP,LOOP.....	1
* 13	PAOZZ	5975005709598	81343	MS3367-7-9	STRAP,TIEDOWN,ELECT.....	1
* 14	PAOZZ	5340011922256	19207	12338663	BRACKET,ANGLE.....	2
15	PAOZZ	5340008091492	81348	CMDX2-3PT573036	CLAMP,LOOP.....	1

END OF FIGURE

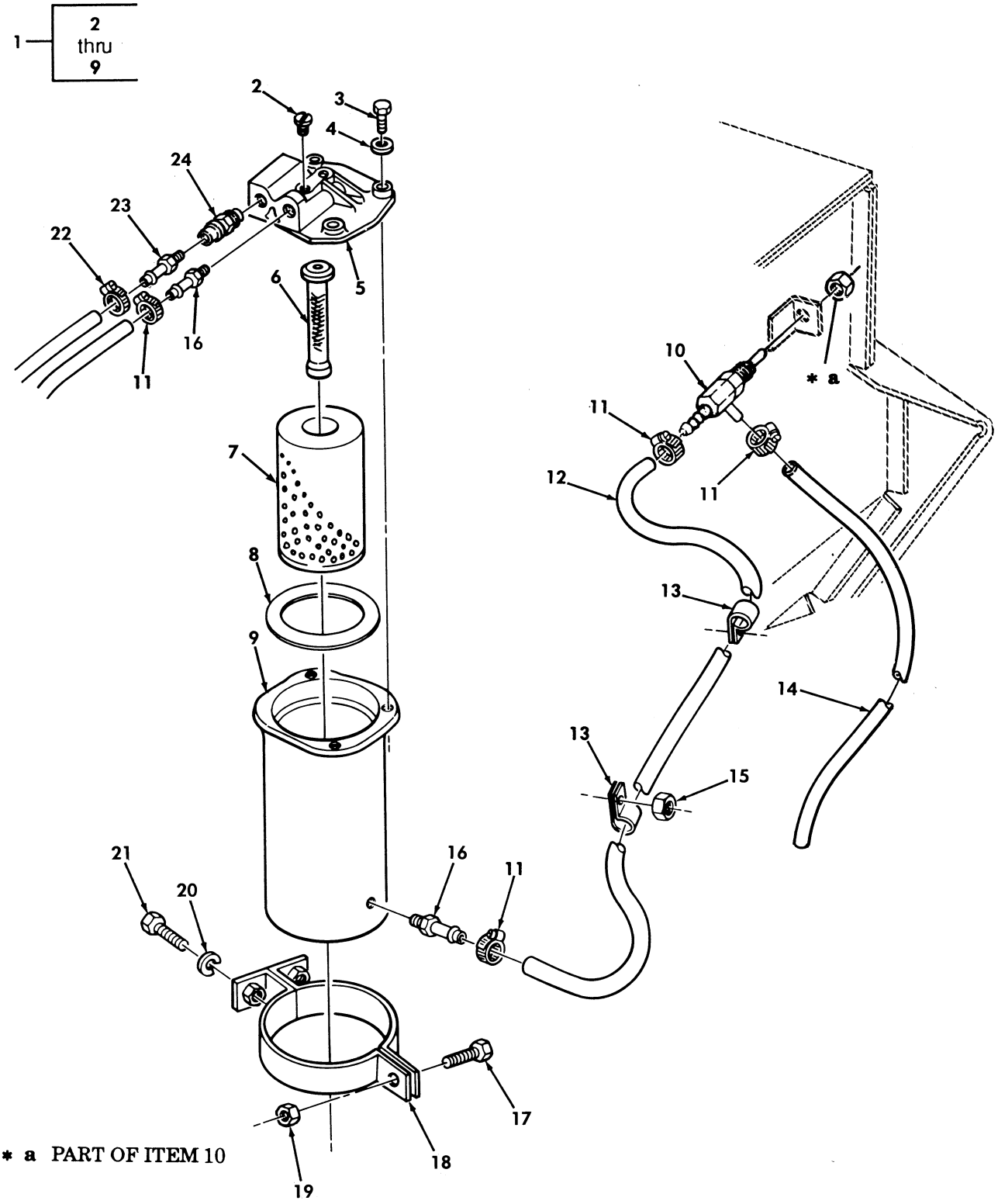

Figure 31. Fuel Tank Vent Line, Filter, and Mounting Hardware.

(1) ITEM NO	(2) SMR CODE	(3) NSN	(4) CAGEC	(5) PART NUMBER	(6) DESCRIPTION AND USABLE ON CODES(UOC)	(7) QTY
					GROUP 0309 FUEL FILTERS	
					FIG. 31 FUEL FILTER ASSEMBLY/WATER SEPARATOR AND MOUNTING HARDWARE	
1	PAOZZ	4330011891007	34623	12339198	FILTER-SEPARATOR,LI.....	1
2	PAOZZ	5305011904073	53964	SA609010	.SCREW,MACHINE.....	1
3	PAOZZ	5306011904553	53964	A609015	.BOLT,MACHINE 1/4-20 UNC-2A X .75 PART OF KIT P/N A630003.....	3
4	PAOZZ	5310008094058	53964	A609014	.WASHER,FLAT 1/4 PART OF KIT P/N A630003.....	3
5	XAOZZ		99587	SC300079	.HEAD.....	1
* 6	PAOZZ	4330011890889	34623	05741059	.FILTER-SEPARATOR,LI.....	1
7	PAOZZ	4330012808417	53964	SC220072	.FILTER ELEMENT,FLUI PART OF KIT P/N A910044.....	1
8	PAOZZ	5331013357592	53964	A618017	.O-RING PART OF KIT P/N A910044.....	1
9	XAOZZ		53964	SC300081	.SHELL ASSEMBLY.....	1
10	PAOZZ	4820014312499	19207	12446751	COCK,DRAIN.....	1
11	PAOZZ	4730011188278	76599	MMF4-SS	CLAMP,HOSE.....	4
12	MOOZZ		34623	5588767	HOSE MAKE FROM HOSE P/N 9438257,26 INCHES LONG.....	1
13	PAOZZ	5340009848540	96906	MS21333-102	CLAMP,LOOP.....	2
14	MOOZZ		6W728	4397080-002	HOSE,FUEL DRAIN MAKE FROM HOSE,P/N 9438257,30 INCHES LONG.....	1
15	PAOZZ	5310001249265	72582	271169	NUT,PLAIN,ASSEMBLED #10-32.....	1
16	PAOZZ	4730011865994	19207	12339888	ADAPTER,STRAIGHT,PI.....	2
17	PAOZZ	5305000680502	96906	MS90725-6	SCREW,CAP,HEXAGON H 1/4-20 X 3/4...	1
18	PFOZZ	5340011868768	19207	12338563	BRACKET,PIPE.....	1
19	PAOZZ	5310010666759	72962	21NE-040	NUT,SELF-LOCKING,HE 1/4-20.....	1
20	PAOZZ	5310004079566	96906	MS35338-45	WASHER,LOCK 5/16.....	2
21	PAOZZ	5306002264825	80204	B1821BH031C075N	BOLT,MACHINE 5/16-18 X 3/4.....	2
22	PAOZZ	4730000243971	81646	62606	CLAMP,HOSE.....	1
23	PAOZZ	4730014125213	34623	12342951-2	ADAPTER,STRAIGHT,PI.....	1
24	PAOZZ	4820014560172	19207	12342953-2	VALVE,CHECK.....	1

END OF FIGURE

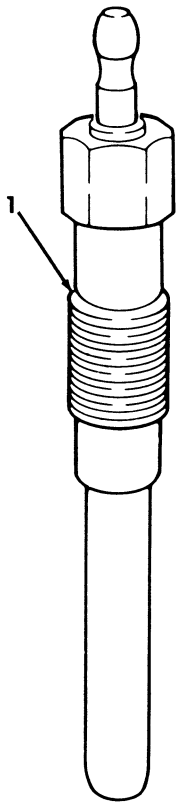

Figure 32. Glow Plug.

(1) ITEM NO	(2) SMR CODE	(3) NSN	(4) CAGEC	(5) PART NUMBER	(6) DESCRIPTION AND USABLE ON CODES(UOC)	(7) QTY
					GROUP 0311 ENGINE STARTING AIDS	
					FIG. 32 GLOW PLUG	
1	PAOZZ	2920011883863	70040	5614017	GLOW PLUG.....	8
					END OF FIGURE	

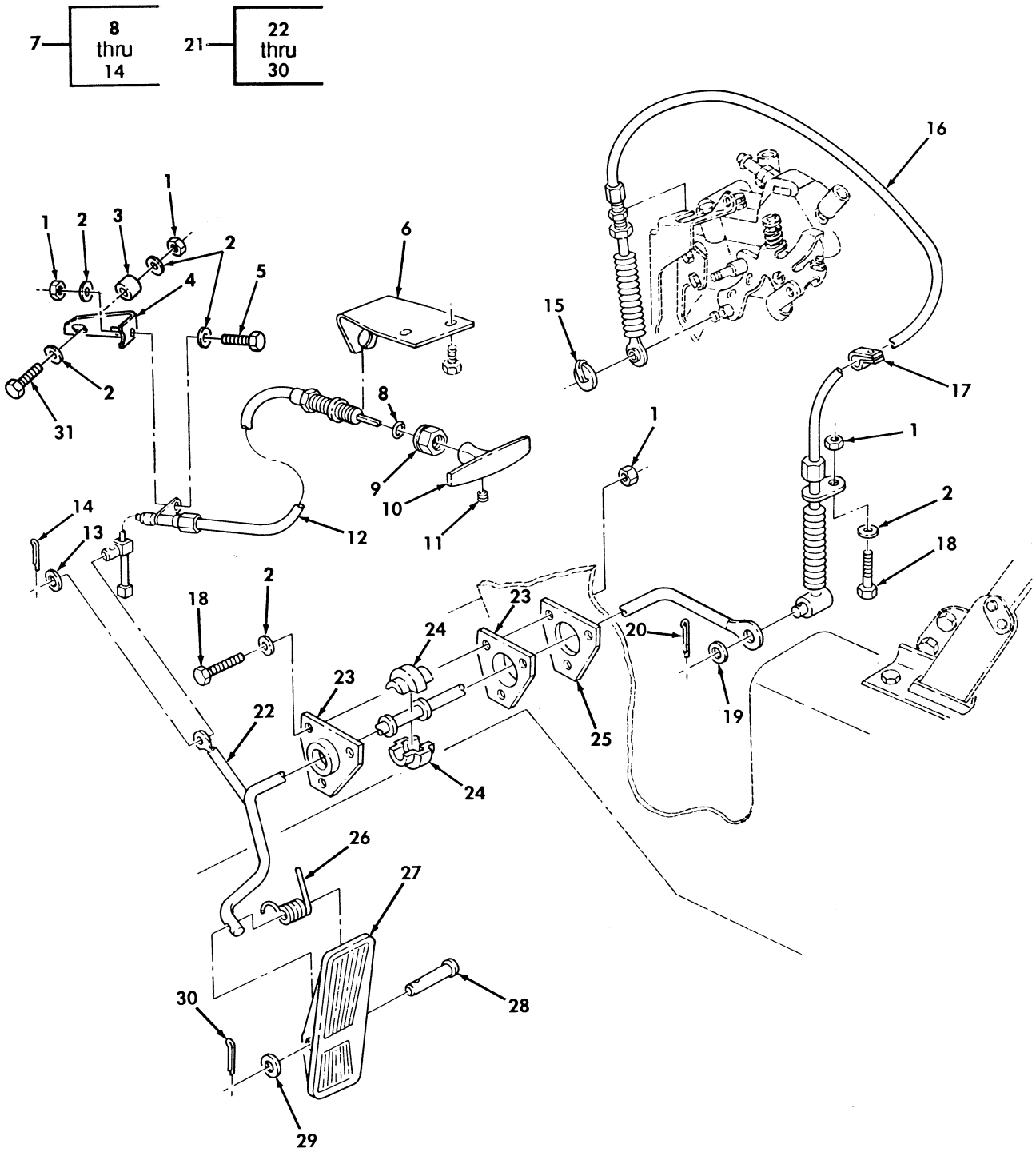

Figure 33. Accelerator Controls and Hand Throttle.

(1) ITEM NO	(2) SMR CODE	(3) NSN	(4) CAGEC	(5) PART NUMBER	(6) DESCRIPTION AND USABLE ON CODES(UOC)	(7) QTY
					GROUP 0312 ACCELERATOR,THROTTLE OR CHOKE CONTROLS	
					FIG. 33 ACCELERATOR CONTROLS AND HAND THROTTLE	
1	PAOZZ	5310000614650	96906	MS51934-31	NUT,SELF-LOCKING 1/4-20.....	7
* 2	PAOZZ	5310011023270	24617	2436161	WASHER,FLAT 1/4.....	10
3	PAOZZ	5365012728376	34623	5598113	SPACER,SLEEVE.....	2
4	PFOZZ	5340013830462	19207	12338362	BRACKET,ANGLE.....	1
5	PAOZZ	5305000680502	96906	MS90725-6	SCREW,CAP HEXAGON H 1/4-20 X 3/4...	1
6	PAOZZ	5340012972800	34623	5594101-C	BRACKET,ANGLE UPPER.....	1
7	PAOOO	2590012795714	60602	35752	CONTROL ASSEMBLY,PU.....	1
* 8	PAOZZ	5331005856663	96906	MS28775-110	.O-RING.....	1
9	XAOZZ		60602	30071	.NUT,HEXAGON 5/8-18.....	1
10	PAOZZ	5340012908360	60602	49005-1224	.HANDLE,MANUAL CONTR.....	1
11	PAOZZ	5305012908206	60602	30073	.SETSCREW.....	1
12	XAOZZ		60602	35752-12	.CABLE.....	1
13	XAOZZ		60602	10618	.WASHER,FLAT.....	1
14	PAOZZ	5315012849812	60602	10166	.PIN,LOCK.....	1
15	PAOZZ	5340011896748	34623	5569460	CLIP,SPRING TENSION.....	1
16	PAOZZ	2590011995423	60602	35745-44	CONTROL ASSEMBLY,PU.....	1
17	PAOZZ	5340000797837	96906	MS21333-67	CLAMP,LOOP.....	1
18	PAOZZ	5305002253843	80204	B1821BH025C100N	SCREW,CAP HEXAGON H 1/4-20 X 1.00..	4
19	PAOZZ	5310008094058	96906	MS27183-10	WASHER,FLAT 1/4.....	1
* 20	PAOZZ	5315008392325	15434	109155	PIN,COTTER.....	1
21	PFOOO	2540012172669	34623	12338369	PEDAL ASSEMBLY,CONT FOR M1114 CHANGE OUT ITEM 22 WITH P/N 4668345.	1
22	PAOZZ	2540014397308	34623	12460224	.PEDAL,CONTROL..... UOC:XAA	1
22	PAOZZ	2540014191595	6W728	4668345	.PEDAL,CONTROL..... UOC:XBB	1
23	PAOZZ	3110011899980	34263	5578635	.PLATE,RETAINING,BEA.....	2
24	PAOZZ	3120011867714	19207	12338356	.BEARING,SLEEVE.....	2
25	PAOZZ	5330011850587	34623	5578660-B	.GASKET.....	1
26	PAOZZ	5360011863737	34623	5578742	.SPRING,HELICAL,TORS.....	1
27	PAOZZ	2540011858656	19207	12338365	.PEDAL,CONTROL.....	1
28	PAOZZ	5315011857421	34623	5578764	.PIN,STRAIGHT,HEADED 3/16 X 1.25....	1
29	PAOZZ	5310008238804	96906	MS27183-9	.WASHER,FLAT 1/4.....	1
* 30	PAOZZ	5315008392325	15434	109155	.PIN,COTTER 1/16 X 1/2.....	1
31	PAOZZ	5305000712509	80204	B1821BH025C150N	SCREW,CAP HEXAGON H 1/4-20 X 1.50..	2

END OF FIGURE

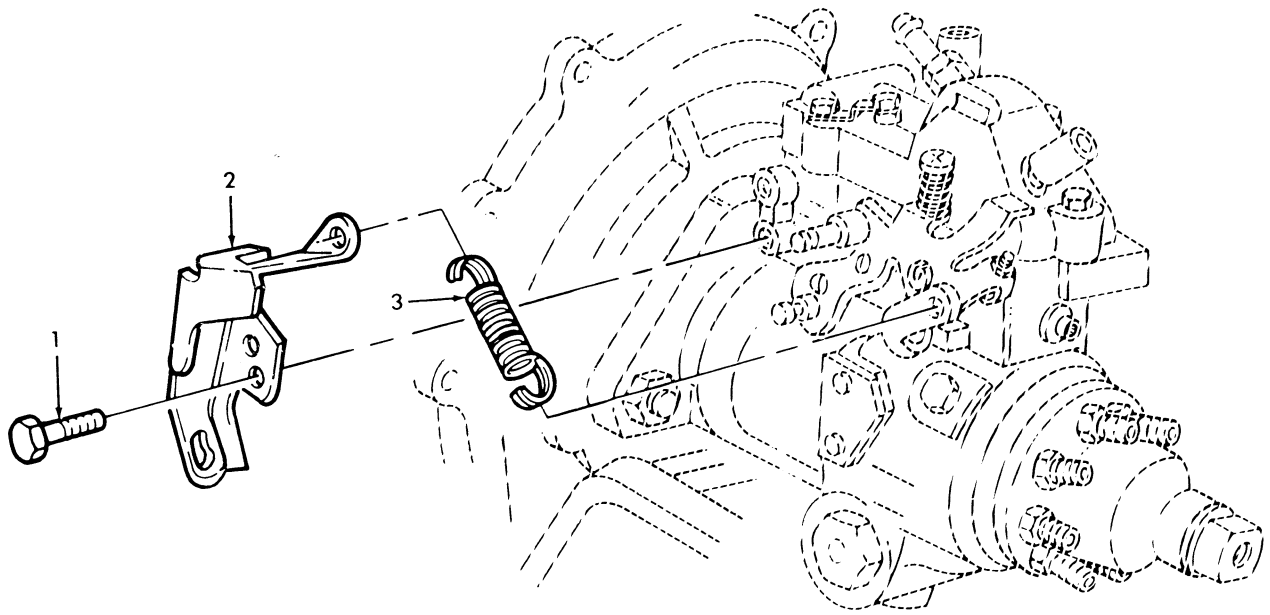

Figure 34. Accelerator Cable Bracket and Idle Spring.

(1) ITEM NO	(2) SMR CODE	(3) NSN	(4) CAGEC	(5) PART NUMBER	(6) DESCRIPTION AND USABLE ON CODES(UOC)	(7) QTY
					GROUP 0312 ACCELERATOR,THROTTLE OR CHOKE CONTROLS	
					FIG. 34 ACCELERATOR CABLE BRACKET AND IDLE SPRING	
1	PAFZZ	5306011524693	24617	11504986	BOLT,MACHINE 8-1.25 X 14 MM.....	2
2	PFFZZ	5340011821074	19207	12339142	BRACKET,MOUNTING.....	1
3	PAOZZ	5360012102852	19207	12339492	SPRING,HELICAL,EXTE.....	1

END OF FIGURE

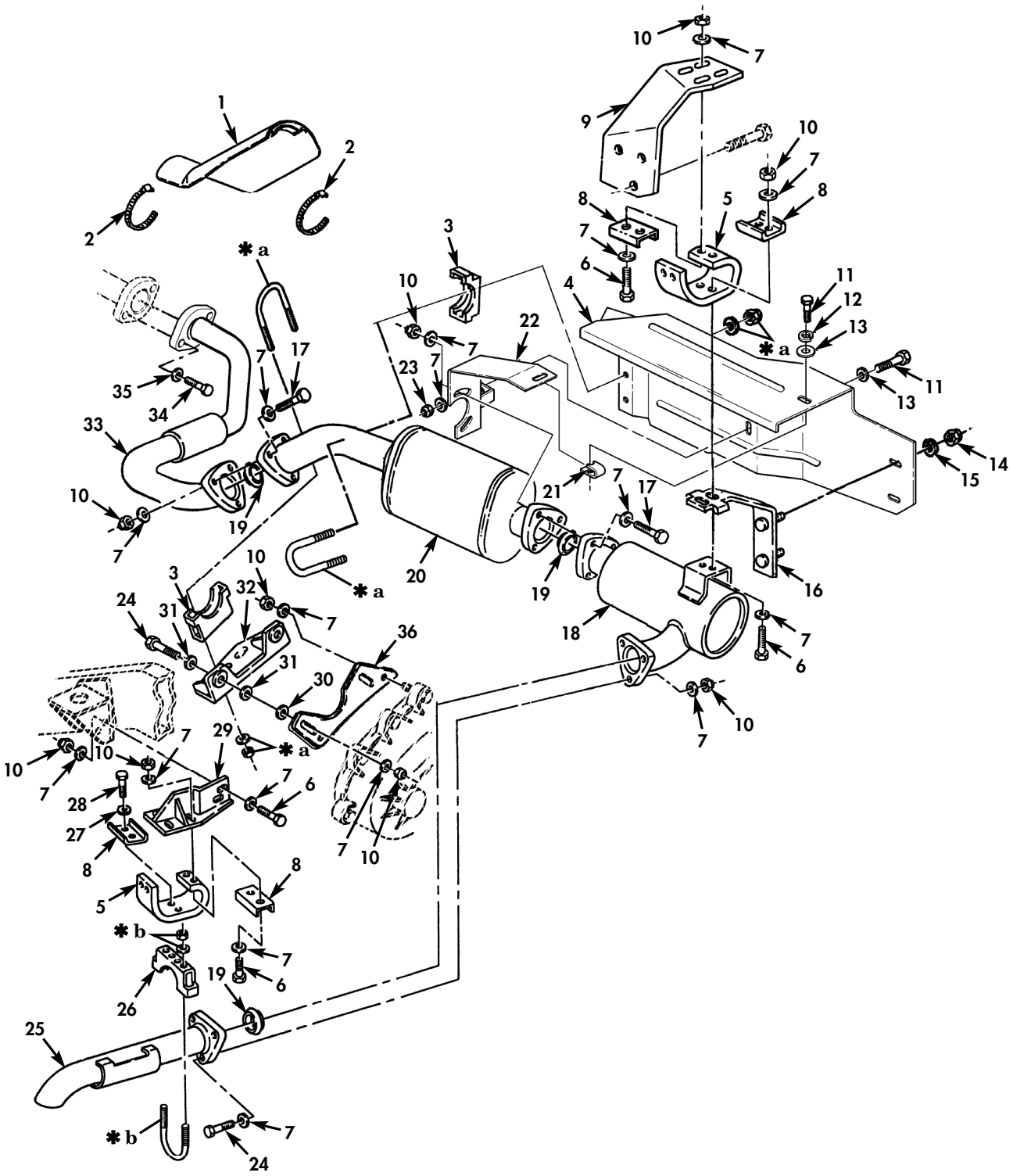

✱ **a** PART OF ITEM 3
✱ **b** PART OF ITEM 26

Figure 35. Muffler, Exhaust Pipes, and Related Parts.

(1) ITEM NO	(2) SMR CODE	(3) NSN	(4) CAGEC	(5) PART NUMBER	(6) DESCRIPTION AND USABLE ON CODES(UOC)	(7) QTY
					GROUP 04 EXHAUST SYSTEM	
					0401 MUFFLER AND PIPES	
					FIG. 35 MUFFLER,EXHAUST PIPES,AND RELATED PARTS	
* 1	PAOZZ	2990014112728	19207	12460087	GUARD,MUFFLER-EXHAU SERIAL NUMBER 299999 AND BELOW..... UOC:TTA,TTT,UUA,UUU,UU1,UU2,XAA,XBB	1
* 1	PAOZZ	2990015680107	34623	6013322	GUARD,MUFFLER-EXHAU SERIAL NUMBER 300000 AND ABOVE..... UOC:TTA,TTT,TT1,UUA,UUU,UU1,UU2	1
* 2	PAOZZ	4730009086292	58536	A-A-52506-F-48	CLAMP,HOSE.....	2
3	PAOZZ	5340014847760	19207	12338343-2	CLAMP,LOOP.....	2
* 4	PAOZZ	2990015602546	19207	12469345	SHIELD ASSEMBLY,HEA SERIAL NUMBER 299999 AND BELOW..... UOC:TTA,TTT,UUA,UUU,UU1,UU2,XAA,XBB	1
* 4	PAOZZ	2990015680722	34623	6042520	HEAT SHIELD,EXHAUST SERIAL NUMBER 300000 AND ABOVE..... UOC:TTA,TTT,TT1,UUA,UUU,UU1,UU2	1
5	PAOZZ	2540013094459	19207	12338337	INSULATION,THERMAL,.....	2
* 6	PAOZZ	5305000680511	80204	B1821BH038C125N	SCREW,CAP,HEXAGON H 3/8-16 X 1.25..	12
* 7	PAOZZ	5310000806004	96906	MS27183-14	WASHER,FLAT 3/8.....	42
8	PAOZZ	5340012124887	34623	5588675	STRAP,RETAINING.....	4
* 9	PAOZZ	2990011877030	19207	12338221	BRACKET,HANGER,EXHAUST SERIAL NUMBER 299999 AND BELOW..... UOC:TTA,TTT,UUA,UUU,UU1,UU2,XAA,XBB	1
* 9	PFOZZ	2990015659400	34623	6031218	HANGER,ENGINE EXHAU SERIAL NUMBER 300000 AND ABOVE..... UOC:TTA,TTT,TT1,UUA,UUU,UU1,UU2	1
* 10	PAOZZ	5310014904433	81349	M45913/4-6CG8C	NUT,SELF-LOCKING,HE 3/8-16.....	24
11	PAOZZ	5305000680508	80204	B1821BH025C075N	SCREW,CAP,HEXAGON H 1/4-20 X 3/4...	2
12	PAOZZ	5310005825965	80205	MS35338-44	WASHER,LOCK 1/4.....	1
* 13	PAOZZ	5310008094058	96906	MS27183-10	WASHER,FLAT 1/4.....	2
14	PAOZZ	5310010128962	24617	9416918	NUT,PLAIN,EXTENDED 1/4-20.....	2
15	PAOZZ	5310004079566	80205	MS35338-45	WASHER,LOCK 5/16.....	2
16	PAOZZ	5340014132689	19207	12460083	BRACKET,MOUNTING.....	1
17	PAOZZ	5305006388920	80204	B1821BH038C225N	SCREW,CAP,HEXAGON H .375-16 X 2.25.	6
18	PAOZZ	2990014113947	34623	12460090	MUFFLER,EXHAUST.....	1
19	PAOZZ	5330012000466	19207	12338339	GASKET.....	3
20	PAOZZ	2990014971042	19207	12469353	CONVERTER,CATALYTIC.....	1
* 21	PAOZZ	5310012536439	19207	12339425	NUT,SHEET SPRING 1/4-20.....	1
* 22	PAOZZ	2590015602737	19207	12469346	BRACKET,VEHICULAR C.....	1
* 23	PAOZZ	5310015101237	81349	M45913/4-4CG8C	NUT,SELF-LOCKING,HE 1/4-20.....	1
* 24	PAOZZ	5305007829489	80204	B1821BH038C200N	SCREW,CAP,HEXAGON H 3/8-16 X 2.00..	4
25	PAOZZ	2990014334422	19207	12469350	PIPE,EXHAUST.....	1
26	PAOZZ	5340012123553	19207	12338343-1	CLAMP,LOOP.....	1
27	PAOZZ	5310006379541	96906	MS35338-46	WASHER,LOCK 3/8.....	2
28	PAOZZ	5305000680510	80204	B1821BH038C100N	SCREW,CAP,HEXAGON H 3/8-16 X 1.00..	2
29	PFOZZ	2990012118587	19207	12338346	HANGER,ENGINE EXHAU.....	1
* 30	PAOZZ	5310012113811	7X677	9417793	WASHER,FLAT 3/8.....	2
* 31	PAOZZ	5325011871604	19207	12338338	GROMMET,NONMETALLIC.....	4
32	PFOZZ	5340012113137	34623	12338340	BRACKET,ANGLE.....	1

(1) ITEM NO	(2) SMR CODE	(3) NSN	(4) CAGEC	(5) PART NUMBER	(6) DESCRIPTION AND USABLE ON CODES(UOC)	(7) QTY
* 33	PAOZZ	2990014222826	34623	12460487	PIPE,EXHAUST SERIAL NUMBER 299999 AND BELOW..... UOC:TTA,TTT,UUA,UUU,UU1,UU2,XAA,XBB	1
* 33	PAOZZ	2990015688367	34623	6038476	PIPE,EXHAUST SERIAL NUMBER 300000 AND ABOVE..... UOC:TTA,TTT,TT1,UUA,UUU,UU1,UU2	1
34	PAOZZ	5306014558016	7X677	15728527	BOLT,MACHINE M10-1.5 X 1/2.....	2
35	PAOZZ	5310014124013	24617	2436163	WASHER,FLAT 3/8.....	2
* 36	PFOZZ	5340012114025	34623	5590387	STRAP,RETAINING.....	1

END OF FIGURE

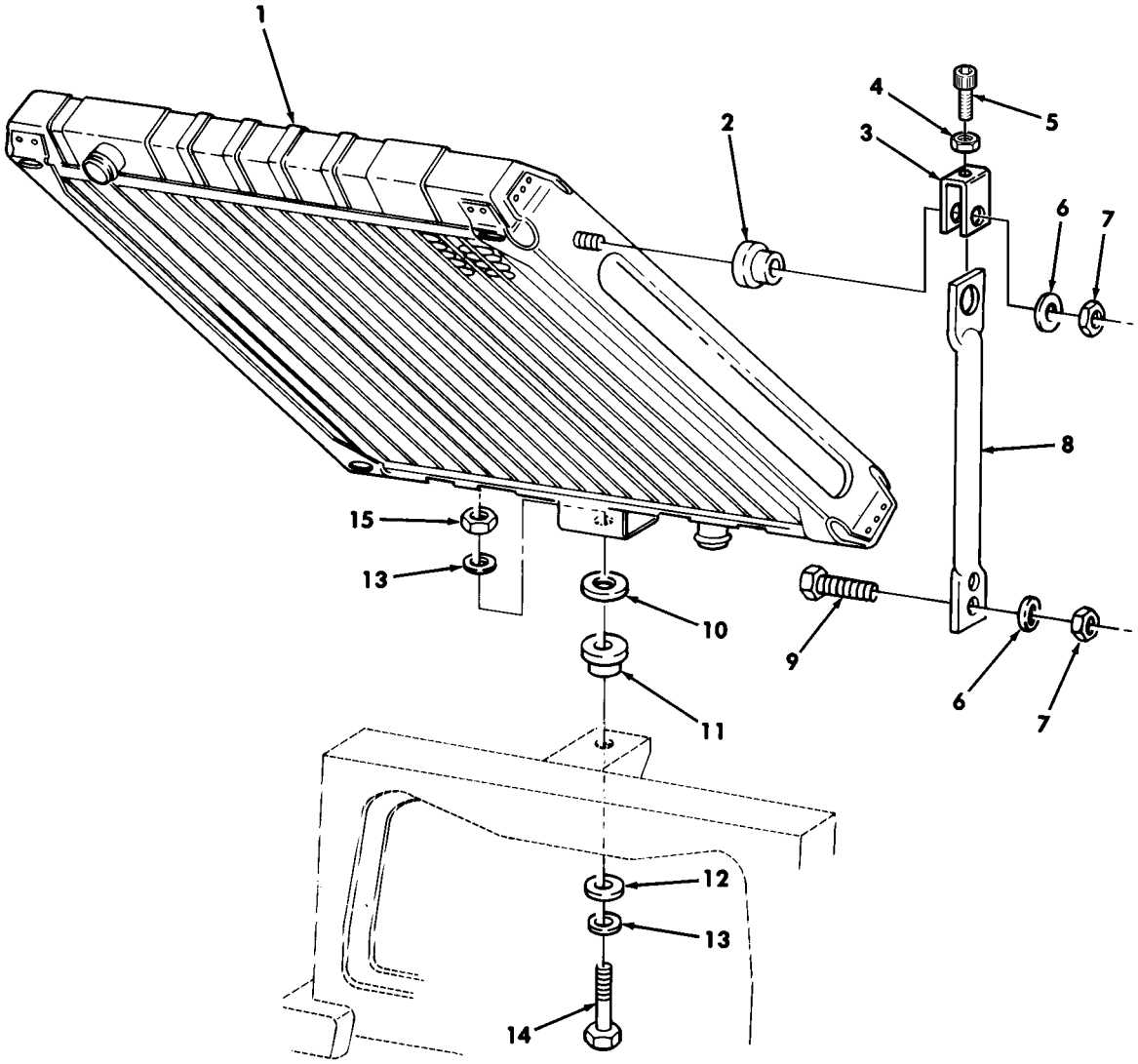

FOR TRUCKS ABOVE SERIAL
NUMBER 300000 SEE FIGURE 38A

Figure 36. Radiator and Mounting Hardware (Serial Number 299999 and Below).

(1) ITEM NO	(2) SMR CODE	(3) NSN	(4) CAGEC	(5) PART NUMBER	(6) DESCRIPTION AND USABLE ON CODES(UOC)	(7) QTY
					GROUP 05 COOLING SYSTEM	
					0501 RADIATOR,EVAPORATIVE COOLER OR HEAT EXCHANGER	
					FIG. 36 RADIATOR AND MOUNTING HARDWARE(SERIAL NUMBER 299999 AND BELOW)	
1	PAOFH	2930014489439	50022	1AF00019	RADIATOR,ENGINE COO.....	1
* 2	PAOZZ	5365014885615	19207	12469382	GROMMET,NONMETALLIC.....	2
* 3	PAOZZ	5340014885609	19207	12469377	BRACKET,MOUNTING L.H.....	1
3	PAOZZ	5340014732704	34623	12469381	BRACKET,MOUNTING R.H.....	1
4	PAOZZ	5310012097702	7X677	9429048	NUT,PLAIN,HEXAGON.....	2
5	PAOZZ	5305009887842	80205	MS16995-68	SCREW,CAP,SOCKET HE.....	2
6	PAOZZ	5310014124013	24617	2436163	WASHER,FLAT.....	6
7	PAOZZ	5310009359021	96906	MS51943-35	NUT,SELF-LOCKING,HE 3/8-16.....	6
8	PFOZZ	2510014610568	34623	RCSK18059-1	SUPPORT,RADIATOR L.H.....	1
8	PFOZZ	2510014610562	34623	RCSK18059-2	SUPPORT,RADIATOR R.H.....	1
9	PAOZZ	5305000680510	80204	B1821BH038C100N	SCREW,CAP,HEXAGON H 3/8-16 X 1.00..	4
10	PAOZZ	5310012690786	19207	12340263	WASHER,FLAT 1/2.....	1
11	PAOZZ	5340011973461	19207	12340264	MOUNT,RESILIENT LOWER.....	1
12	PAOZZ	5310012507835	7X677	9428851	WASHER,FLAT 1/2.....	1
* 13	PAOZZ	5310011211703	24617	2436165	WASHER,FLAT 1/2.....	2
14	PAOZZ	5305000712071	80204	B1821BH050C200N	SCREW,CAP,HEXAGON H 1/2-13 X 2.00..	1
15	PAOZZ	5310011494407	24617	9442900	NUT,SELF-LOCKING,HE 1/2-13.....	1

END OF FIGURE

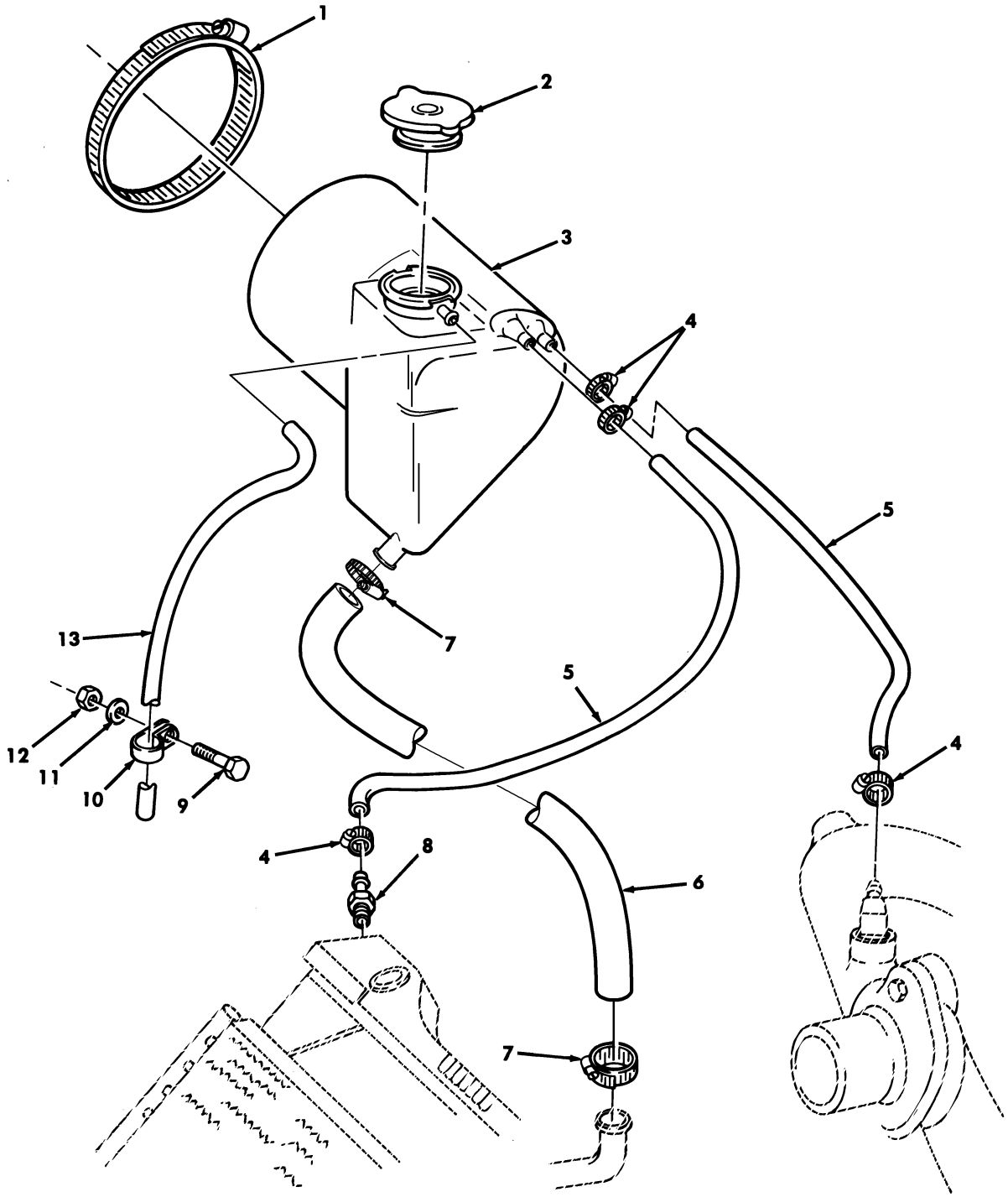

Figure 37. Surge Tank and Related Parts.

(1) ITEM NO	(2) SMR CODE	(3) NSN	(4) CAGEC	(5) PART NUMBER	(6) DESCRIPTION AND USABLE ON CODES(UOC)	(7) QTY
					GROUP 0501 RADIATOR,EVAPORATIVE COOLER OR HEAT EXCHANGER	
					FIG. 37 SURGE TANK AND RELATED PARTS	
* 1	PAOZZ	4730009086294	34623	5578947	CLAMP,HOSE.....	2
2	PAOZZ	2930014267711	78225	R17	CAP,FILLER OPENING 15 PSI.....	1
3	PAOZZ	2930012565350	19207	12340061	TANK,RADIATOR,OVERF.....	1
* 4	PAOZZ	4730000243971	19207	12339884-1	CLAMP,HOSE.....	4
5	PAOZZ	4720011866018	19207	12339155-1	HOSE,NONMETALLIC.....	2
6	PAOZZ	4720013602380	19207	12340046	HOSE,NONMETALLIC.....	1
7	PAOZZ	4730013299151	7Z588	CT250L	CLAMP,HOSE.....	2
8	PAOZZ	4730011859453	34623	12339889	ADAPTER,STRAIGHT,PI.....	1
9	PAOZZ	5305000680508	80204	B1821BH025C075N	SCREW,CAP,HEXAGON H 1/4-20 X 3/4...	1
10	PAOZZ	5340009848540	96906	MS21333-102	CLAMP,LOOP.....	1
11	PAOZZ	5310011023270	24617	2436161	WASHER,FLAT 1/4.....	1
12	PAOZZ	5310000614650	96906	MS51943-31	NUT,SELF-LOCKING,HE 1/4-20.....	1
13	MOOZZ		34623	5578999	HOSE MAKE FROM HOSE,P/N ET029,18 INCHES LONG.....	1

END OF FIGURE

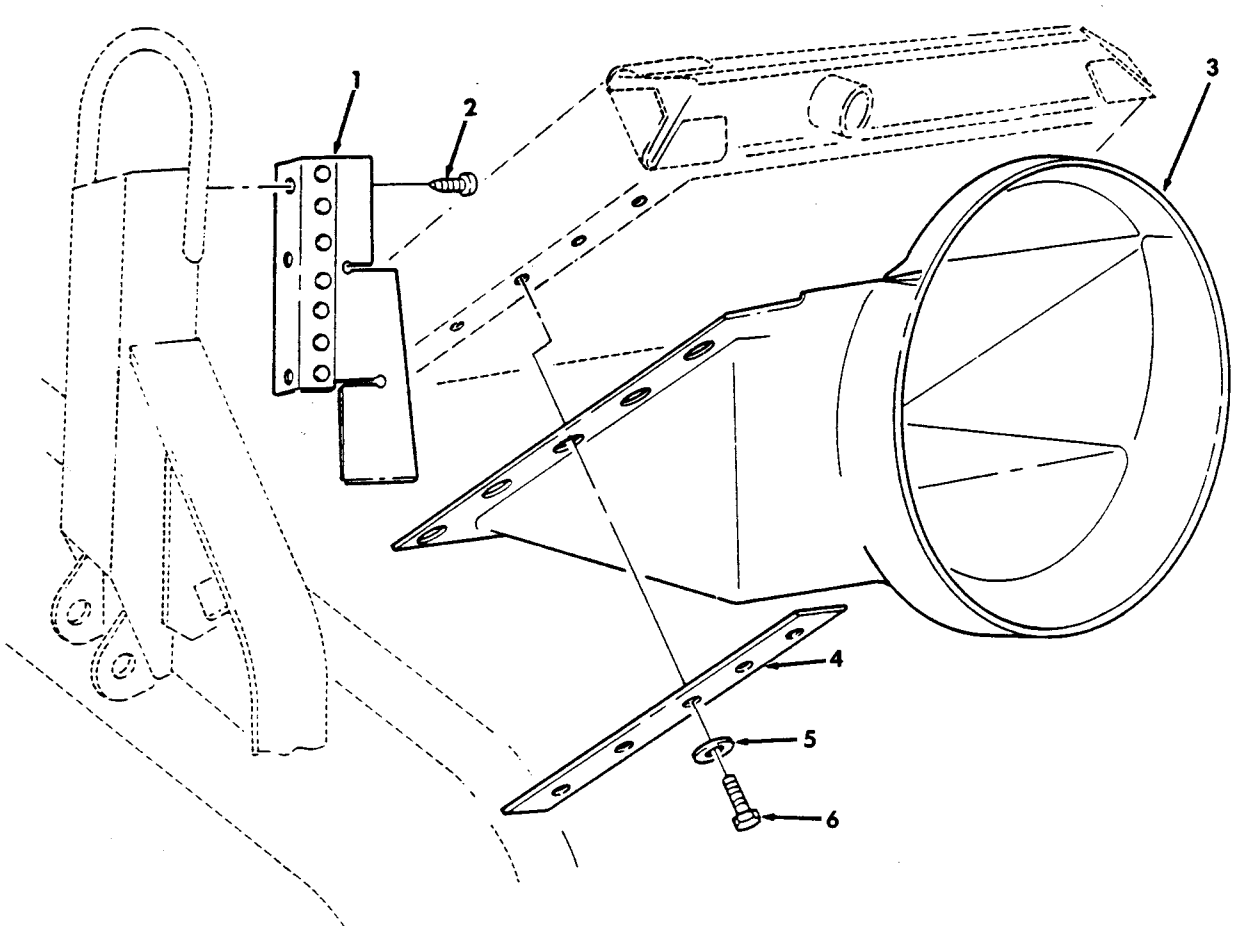

Figure 38. Radiator Shroud and Related Parts (Serial Number 299999 and Below).

(1) ITEM NO	(2) SMR CODE	(3) NSN	(4) CAGEC	(5) PART NUMBER	(6) DESCRIPTION AND USABLE ON CODES(UOC)	(7) QTY
					GROUP 0502 COWLING,DEFLECTOR,AIR DUCTS,SHROUDS	
					FIG. 38 RADIATOR SHROUD AND RELATED PARTS (SERIAL NUMBER 299999 AND BELOW)	
1	PAOZZ	2510012106939	19207	12339166-1	SHIELD ASSEMBLY,SHR L.H.....	1
1	PAOZZ	2990012104276	19207	12339166-2	SHIELD ASSEMBLY,SHR R.H.....	1
2	PAOZZ	5305000526921	80205	MS24629-57	SCREW,TAPPING 1/4-20 X 1/2.....	6
3	PAOOO	2930014332547	34623	RCSK17158	SHROUD,FAN,RADIATOR.....	1
4	PAOZZ	5340014324881	34623	RCSK17289	STRAP,RETAINING.....	2
5	PAOZZ	5310005825965	96906	MS35338-44	WASHER,LOCK 1/4.....	10
6	PAOZZ	5305000687837	80204	B1821BH025C063N	SCREW,CAP,HEXAGON H 1/4-20 X 5/8...	10

END OF FIGURE

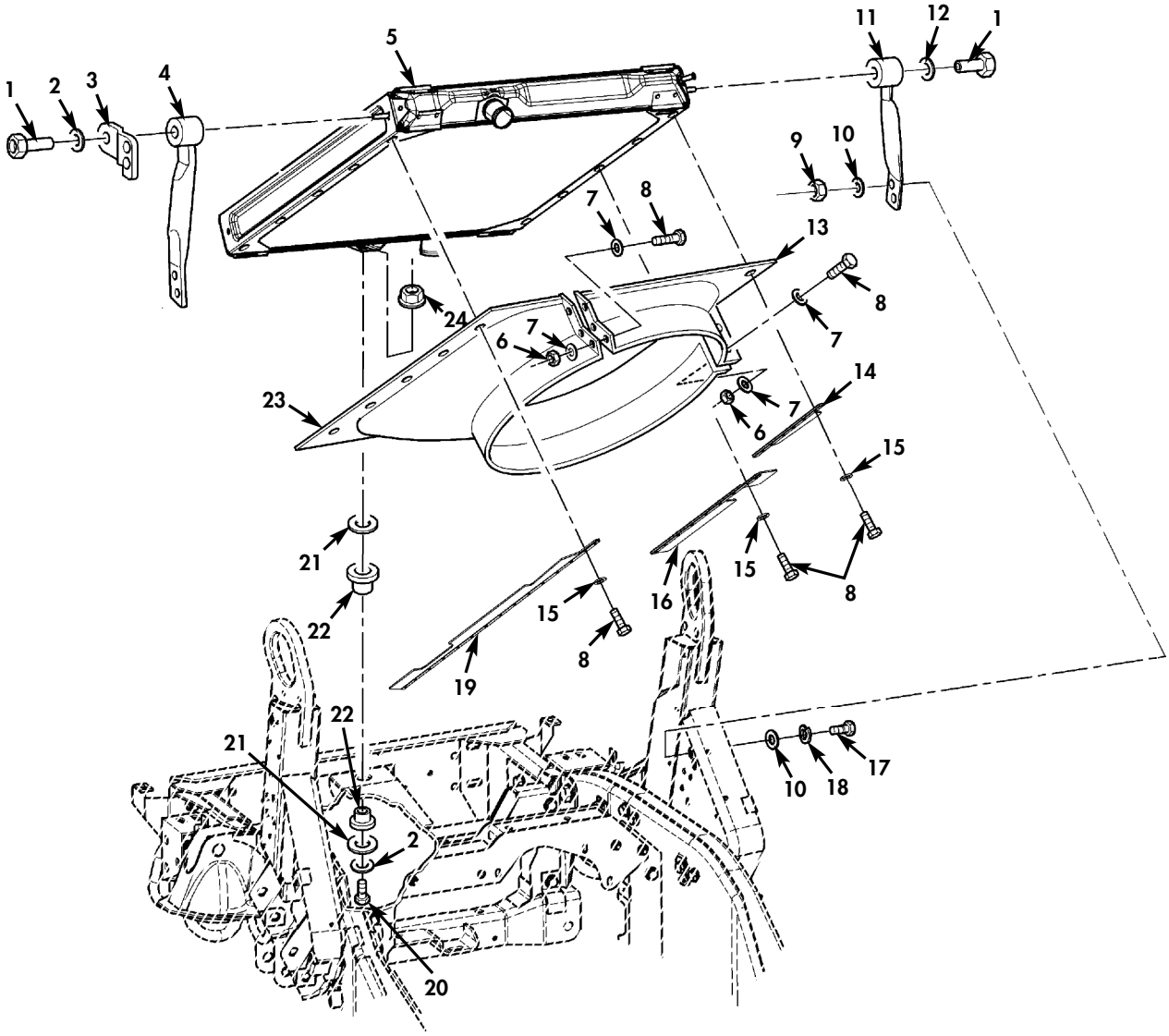

Figure 38A. Radiator, Shroud, and Related Parts (Serial Number 300000 and Above).

(1) ITEM NO	(2) SMR CODE	(3) NSN	(4) CAGEC	(5) PART NUMBER	(6) DESCRIPTION AND USABLE ON CODES(UOC)	(7) QTY
					GROUP 0502 RADIATOR,EVAPORATIVE COOLER OR HEAT EXCHANGER	
					FIG. 38A RADIATOR,SHROUD,AND RELATED PARTS(SERIAL NUMBER 300000 AND ABOVE)	
* 1	PFOZZ	5340015658860	34623	6023405	STANDOFF,THREADED S 3/8-16 X 1.50.. UOC:TTA,TTT,TT1,UUA,UUU,UU1,UU2	2
* 2	PAOZZ	5310011211703	24617	2436165	WASHER,FLAT 1/2..... UOC:TTA,TTT,TT1,UUA,UUU,UU1,UU2	2
* 3	PFOZZ	2590015657328	34623	6038874	BRACKET,VEHICULAR C..... UOC:TTA,TTT,TT1,UUA,UUU,UU1,UU2	1
* 4	PFOZZ	2930015658887	81860	29329-1	RETAINER,RADIATOR..... UOC:TTA,TTT,TT1,UUA,UUU,UU1,UU2	1
* 5	PAOFH	2930014489439	50022	1AF00019	RADIATOR,ENGINE COO..... UOC:TTA,TTT,TT1,UUA,UUU,UU1,UU2	1
* 6	PAOZZ	5310000614650	80205	M45913/3-4CG8C	NUT,SELF-LOCKING,HE 1/4-20..... UOC:TTA,TTT,TT1,UUA,UUU,UU1,UU2	5
* 7	PAOZZ	5310011023270	34623	2436161	WASHER,FLAT 1/4..... UOC:TTA,TTT,TT1,UUA,UUU,UU1,UU2	10
* 8	PAOZZ	5305000712505	80204	B1821BH025C088N	SCREW,CAP,HEXAGON H 1/4-20 X 7/8... UOC:TTA,TTT,TT1,UUA,UUU,UU1,UU2	15
* 9	PAOZZ	5310009359021	96906	MS51943-35	NUT,SELF-LOCKING,HE 3/8-16..... UOC:TTA,TTT,TT1,UUA,UUU,UU1,UU2	4
* 10	PAOZZ	5310014124013	24617	2436163	WASHER,FLAT 3/8..... UOC:TTA,TTT,TT1,UUA,UUU,UU1,UU2	8
* 11	PFOZZ	2930015658878	81860	29329-2	RETAINER,RADIATOR R.H..... UOC:TTA,TTT,TT1,UUA,UUU,UU1,UU2	1
* 12	PFOZZ	5310015658828	81860	9810386	WASHER,FLAT 1/2..... UOC:TTA,TTT,TT1,UUA,UUU,UU1,UU2	1
* 13	PAOZZ	2930015657623	34623	6043383	SHROUD,FAN,RADIATOR UPPER..... UOC:TTA,TTT,TT1,UUA,UUU,UU1,UU2	1
* 14	PAOZZ	2930015657981	34623	6013409	BAFFLE,RADIATOR R.H.,UPPER..... UOC:TTA,TTT,TT1,UUA,UUU,UU1,UU2	1
* 15	PAOZZ	5310005825965	80205	MS35338-44	WASHER,LOCK 1/4..... UOC:TTA,TTT,TT1,UUA,UUU,UU1,UU2	10
* 16	PAOZZ	2930015657991	34623	6038710	BAFFLE,RADIATOR R.H.,LOWER..... UOC:TTA,TTT,TT1,UUA,UUU,UU1,UU2	1
* 17	PAOZZ	5305005432419	80204	B1821BH038C113N	SCREW,CAP,HEXAGON H 3/8-16 X 1.125. UOC:TTA,TTT,TT1,UUA,UUU,UU1,UU2	4
* 18	PAOZZ	5310000045033	80205	MS35338-46	WASHER,LOCK 3/8..... UOC:TTA,TTT,TT1,UUA,UUU,UU1,UU2	4
* 19	PAOZZ	2930015657209	34623	6038679	SHROUD,FAN,RADIATOR L.H..... UOC:TTA,TTT,TT1,UUA,UUU,UU1,UU2	1
* 20	PAOZZ	5305000712074	80204	B1821BH050C275N	SCREW,CAP,HEXAGON H 1/2-13 X 2.75.. UOC:TTA,TTT,TT1,UUA,UUU,UU1,UU2	1
* 21	PAOZZ	5310012507835	7X677	9428851	WASHER,FLAT 1/2..... UOC:TTA,TTT,TT1,UUA,UUU,UU1,UU2	2
* 22	PAOZZ	5342015657965	81860	28787-3	MOUNT,RESILIENT,WEA..... UOC:TTA,TTT,TT1,UUA,UUU,UU1,UU2	2

(1) ITEM NO	(2) SMR CODE	(3) NSN	(4) CAGEC	(5) PART NUMBER	(6) DESCRIPTION AND USABLE ON CODES(UOC)	(7) QTY
* 23	PAOZZ	2930015659993	34623	6043382	SHROUD,FAN,RADIATOR LOWER..... UOC:TTA,TTT,TT1,UUA,UUU,UU1,UU2	1
* 24	PAOZZ	5310008493589	96906	MS51988-11	NUT,PLAIN EXTENDED 1/2-13..... UOC:TTA,TTT,TT1,UUA,UUU,UU1,UU2	1

END OF FIGURE

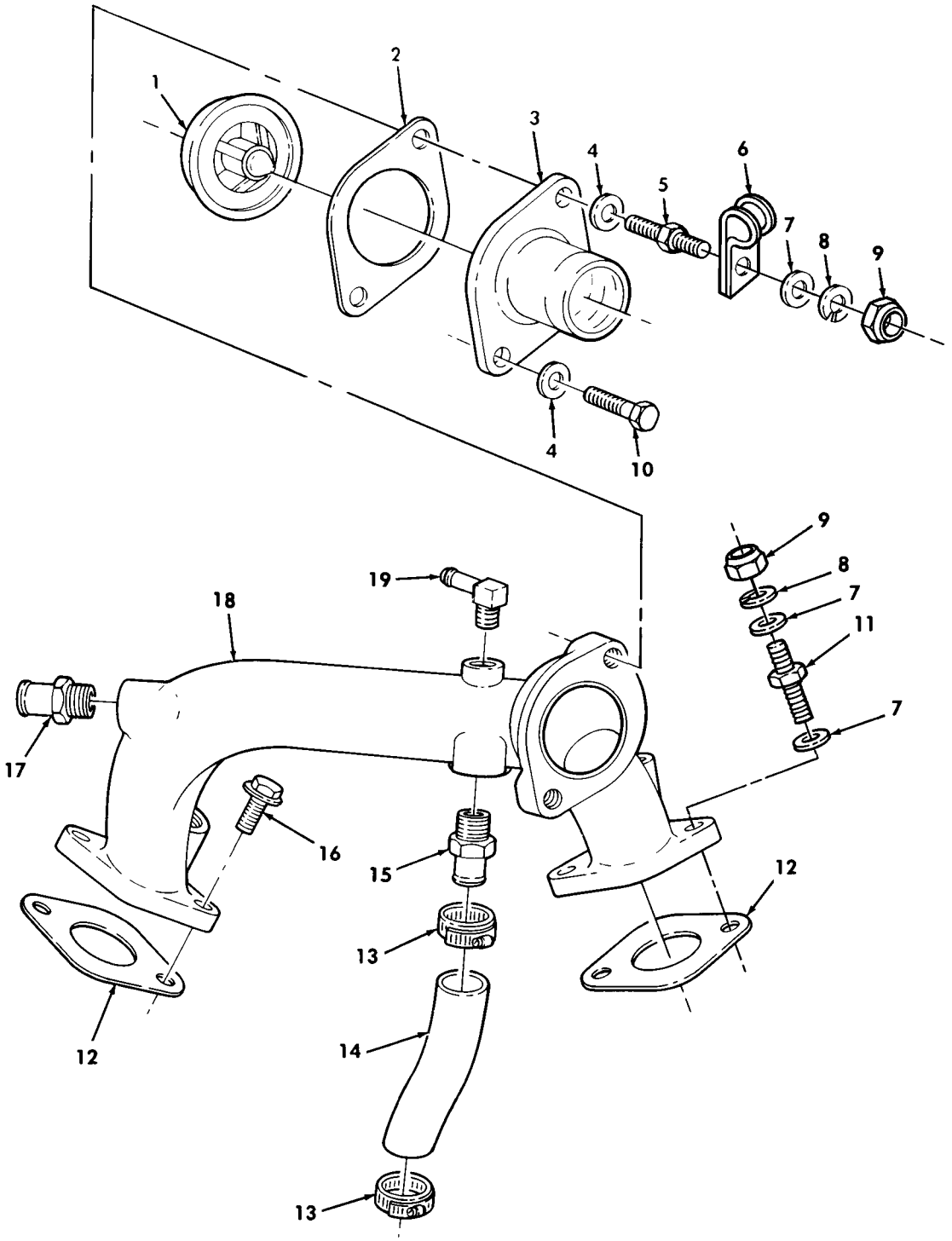

Figure 39. Thermostat, Water Crossover, and Attaching Hardware (Serial Number 299999 and Below).

(1) ITEM NO	(2) SMR CODE	(3) NSN	(4) CAGEC	(5) PART NUMBER	(6) DESCRIPTION AND USABLE ON CODES(UOC)	(7) QTY
					GROUP 0503 WATER MANIFOLD,HEADERS, THERMOSTATS AND HOUSING GASKETS	
					FIG. 39 THERMOSTAT,WATER CROSSOVER, AND ATTACHING HARDWARE (SERIAL NUMBER 299999 AND BELOW)	
1	PAOZZ	6685014449478	7X677	12559337	THERMOSTAT,FLOW CON.....	1
2	PAOZZ	5330014348611	7X677	12551591	GASKET PART OF KIT P/N 12456409.....	1
3	PAOZZ	2930011474198	7X677	14028918	WATER OUTLET,ENGINE.....	1
4	PAOZZ	5310014124013	24617	2436163	WASHER,FLAT 3/8.....	2
5	PAOZZ	5307011501227	7X677	14033946	STUD,SHOULDERED 10-1.5 X 30 MM.....	1
6	PAOZZ	5340008546730	80205	MS21333-124	CLAMP,LOOP.....	1
7	PAOZZ	5310000806004	96906	MS27183-14	WASHER,FLAT	3
8	PAOZZ	5310012067306	7X677	11500207	WASHER,LOCK.....	2
9	PAOZZ	5310013958747	80204	B18241B100F	NUT,PLAIN,HEXAGON 10-1.5 MM X 20...	2
10	PAOZZ	5306011483666	7X677	14056165	BOLT,MACHINE 10-1.5 X 30MM.....	1
11	PAOZZ	5307014655796	19207	12339406-4	STUD,SHOULDERED M10-1.5 X 30 X 20..	1
12	PAOZZ	5330011490874	7X677	10137488	GASKET PART OF KIT P/N 12456409.....	2
13	PAOZZ	4730014440701	7X677	11516230	CLAMP,HOSE.....	2
14	MOOZZ		7X677	10243629	HOSE,NONMETALLIC MAKE FROM HOSE,P/N MS521302B206R,5.5 INCHES LONG.....	1
15	PAOZZ	4730014452358	7X677	10183956	ADAPTER,STRAIGHT,PI.....	1
16	PAOZZ	5306011496280	7X677	1635490	BOLT,MACHINE 10-1.5 X 29 MM.....	3
17	PAOZZ	4730011482758	19207	12339396	ADAPTER,STRAIGHT,PI.....	1
18	PAOZZ	2930014607507	7X677	12554091	WATER OUTLET,ENGINE.....	1
19	PAOZZ	4730000412526	79470	1069X6	ELBOW,PIPE TO HOSE.....	1

END OF FIGURE

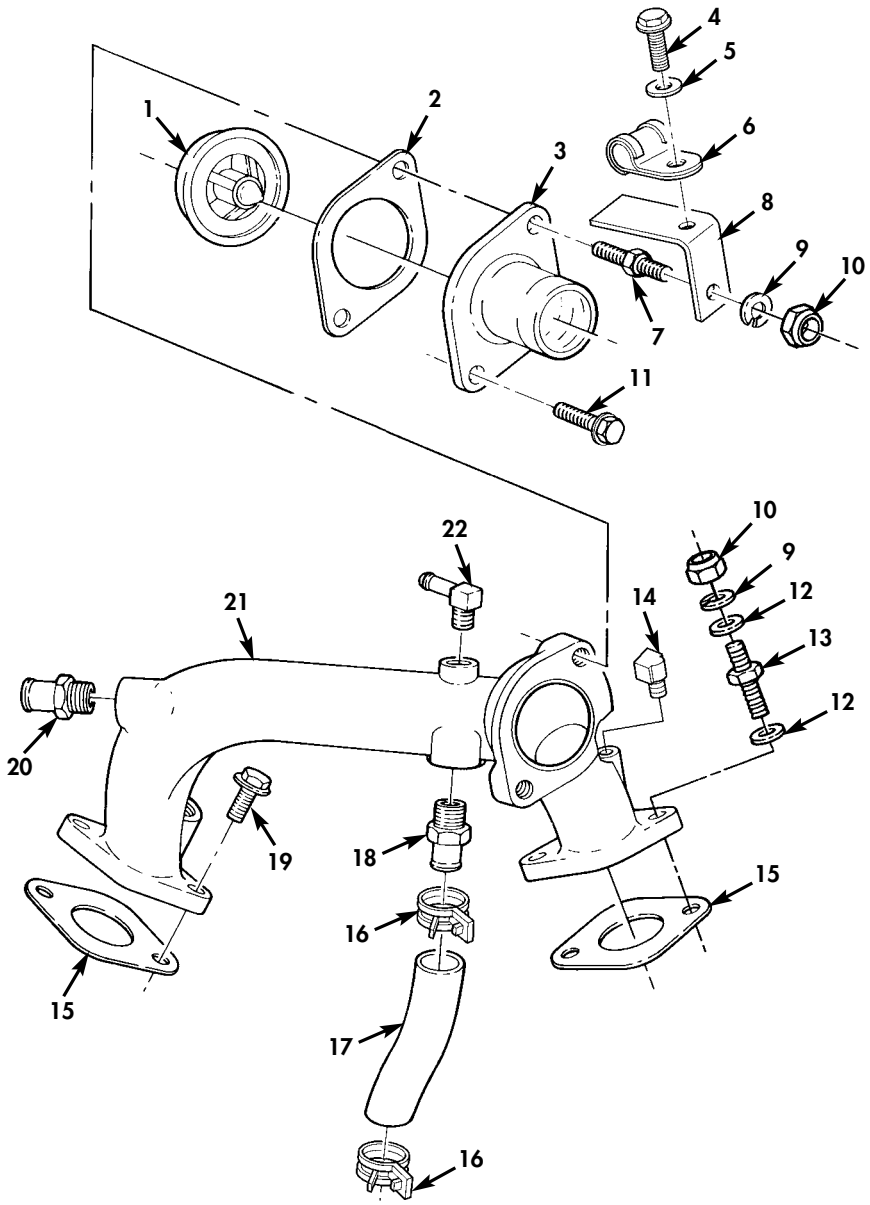

Figure 39A. Thermostat, Water Crossover, and Attaching Hardware (Serial Number 300000 and Above).

(1) ITEM NO	(2) SMR CODE	(3) NSN	(4) CAGEC	(5) PART NUMBER	(6) DESCRIPTION AND USABLE ON CODES(UOC)	(7) QTY
					GROUP 0503 WATER MANIFOLDS,HEADERS THERMOSTATS AND HOUSING GASKET	
					FIG. 39A THERMOSTAT,WATER CROSSOVER, AND ATTACHING HARDWARE(SERIAL NUMBER 300000 AND ABOVE)	
* 1	PAOZZ	6685014449478	7X677	12559337	THERMOSTAT,FLOW CON..... UOC:TTA,TTT,TT1,UUA,UUU,UU1,UU2	1
* 2	PAOZZ	5330014348611	7X677	12551591	GASKET..... UOC:TTA,TTT,TT1,UUA,UUU,UU1,UU2	1
* 3	PAOZZ	2930011474198	7X677	14028918	WATER OUTLET,ENGINE..... UOC:TTA,TTT,TT1,UUA,UUU,UU1,UU2	1
* 4	PAOZZ	5305013936311	24617	271153	SCREW,TAPPING 3/8-16 X 5/8..... UOC:TTA,TTT,TT1,UUA,UUU,UU1,UU2	1
* 5	PAOZZ	5310014124013	24617	2436163	WASHER,FLAT 3/8..... UOC:TTA,TTT,TT1,UUA,UUU,UU1,UU2	1
* 6	PAOZZ	5340008546730	80205	MS21333-124	CLAMP,LOOP..... UOC:TTA,TTT,TT1,UUA,UUU,UU1,UU2	1
* 7	PAOZZ	5307011501227	7X677	14033946	STUD,SHOULDERED..... UOC:TTA,TTT,TT1,UUA,UUU,UU1,UU2	1
* 8	PAOZZ	2590015690708	19207	12469288	BRACKET,MOUNTING..... UOC:TTA,TTT,TT1,UUA,UUU,UU1,UU2	1
* 9	PAOZZ	5310012067306	7X677	11500207	WASHER,LOCK 1/4..... UOC:TTA,TTT,TT1,UUA,UUU,UU1,UU2	2
* 10	PAOZZ	5310013958747	80204	B18241B100F	NUT,PLAIN,HEXAGON M10-1.5 X 20MM... UOC:TTA,TTT,TT1,UUA,UUU,UU1,UU2	2
* 11	PAOZZ	5306011483666	7X677	14056165	BOLT,MACHINE M10-1.5 X 30MM..... UOC:TTA,TTT,TT1,UUA,UUU,UU1,UU2	1
* 12	PAOZZ	5310000806004	96906	MS27183-14	WASHER,FLAT..... UOC:TTA,TTT,TT1,UUA,UUU,UU1,UU2	2
* 13	PAOZZ	5307014655796	19207	12339406-4	STUD,SHOULDERED..... UOC:TTA,TTT,TT1,UUA,UUU,UU1,UU2	1
* 14	PAOZZ	4730015658363	34623	6031548	ELBOW,PIPE TO TUBE..... UOC:TTA,TTT,TT1,UUA,UUU,UU1,UU2	1
* 15	PAOZZ	5330011490874	7X677	10137488	GASKET..... UOC:TTA,TTT,TT1,UUA,UUU,UU1,UU2	2
* 16	PAOZZ	5340015685727	34623	11516435	CLAMP,LOOP..... UOC:TTA,TTT,TT1,UUA,UUU,UU1,UU2	2
* 17	MOOZZ		7X677	10243629	HOSE,NONMETALLIC MAKE FROM HOSE P/N SAE-20R1ECLTS-A-25XR, 5-1/2 INCHES LONG..... UOC:TTA,TTT,TT1,UUA,UUU,UU1,UU2	1
* 18	PAOZZ	4730014452358	7X677	10183956	ADAPTER,STRAIGHT,PI..... UOC:TTA,TTT,TT1,UUA,UUU,UU1,UU2	1
* 19	PAOZZ	5306011496280	7X677	1635490	BOLT,MACHINE M10-1.5 X 30MM..... UOC:TTA,TTT,TT1,UUA,UUU,UU1,UU2	3
* 20	PAOZZ	4730011482758	19207	12339396	ADAPTER,STRAIGHT,PI..... UOC:TTA,TTT,TT1,UUA,UUU,UU1,UU2	1
* 21	PAOZZ	2930014607507	7X677	12554091	WATER OUTLET,ENGINE..... UOC:TTA,TTT,TT1,UUA,UUU,UU1,UU2	1
* 22	PAOZZ	4730000412526	79470	1069X6	ELBOW,PIPE TO HOSE..... UOC:TTA,TTT,TT1,UUA,UUU,UU1,UU2	1

END OF FIGURE

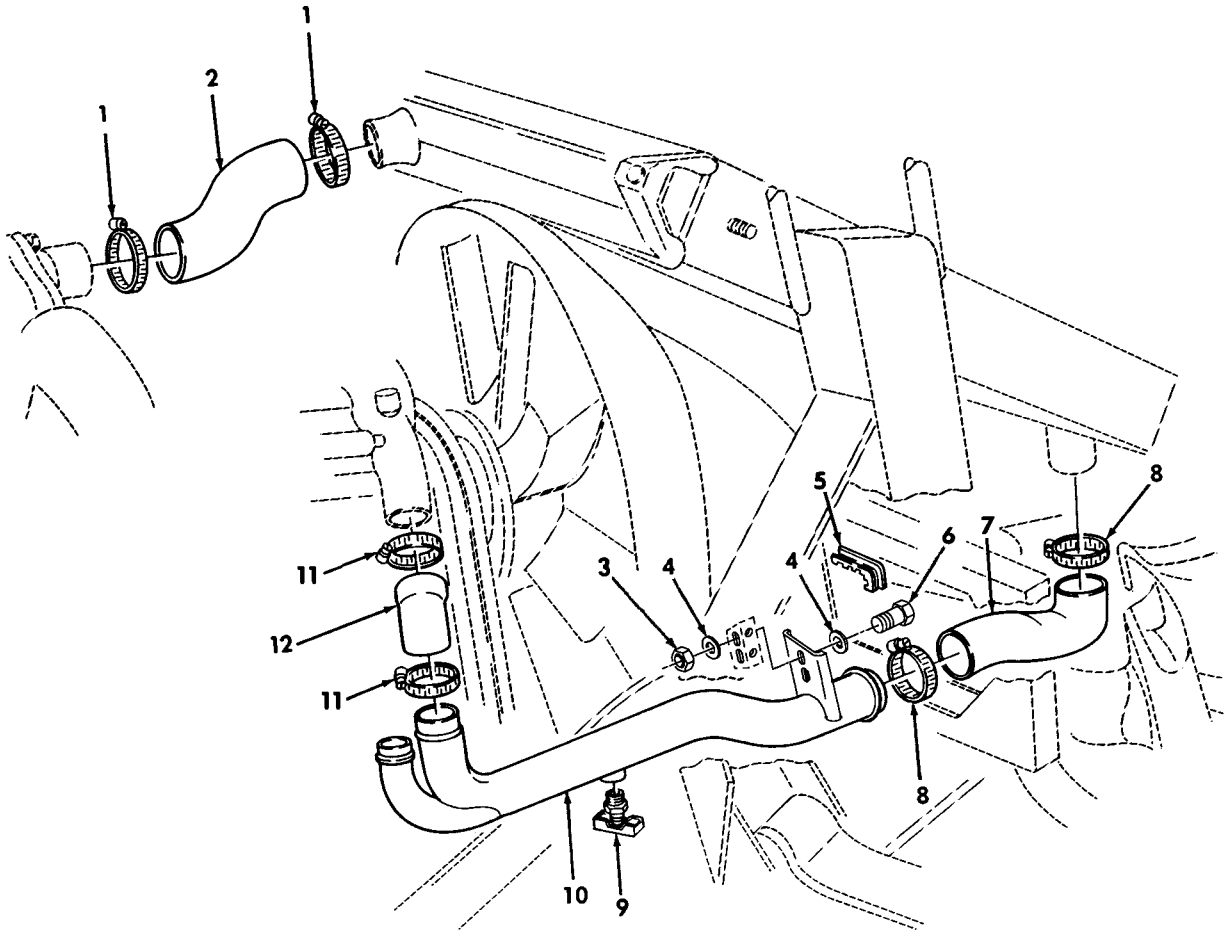

Figure 40. Radiator Hoses and Related Parts (Serial Number 299999 and Below).

(1) ITEM NO	(2) SMR CODE	(3) NSN	(4) CAGEC	(5) PART NUMBER	(6) DESCRIPTION AND USABLE ON CODES(UOC)	(7) QTY
					GROUP 0503 WATER MANIFOLD,HEADERS, THERMOSTATS AND HOUSING GASKETS	
					FIG. 40 RADIATOR HOSES AND RELATED PARTS (SERIAL NUMBER 299999 AND BELOW)	
1	PAOZZ	4730013299151	35708	HS32	CLAMP,HOSE.....	2
2	PAOZZ	4720011883909	19207	12339160	HOSE,PREFORMED INLET.....	1
3	PAOZZ	5310000614650	96906	MS51943-31	NUT,SELF-LOCKING,HE.....	2
4	PAOZZ	5310011023270	24617	2436161	WASHER,FLAT.....	4
5	MOOZZ		19207	12339902-12	PAD,CUSHION MAKE FROM PAD,P/N 12339902-1,5.6 INCHES LONG.....	1
6	PAOZZ	5305000680508	80204	B1821BH025C075N	SCREW,CAP,HEXAGON H.....	2
7	PAOZZ	4720014338266	34623	RCSK17275	HOSE,PREFORMED LOWER.....	1
8	PAOZZ	4730009098627	76599	36HSS	CLAMP,HOSE.....	2
9	PAOZZ	4820007529040	93061	DC603-2	COCK,DRAIN.....	1
10	PAOZZ	4710011880028	34623	5578604	TUBE,BENT,METALLIC LOWER.....	1
11	PAOZZ	4730013299151	7Z588	CT250L	CLAMP,HOSE.....	2
12	PAOZZ	4720011881370	19207	12339159	HOSE,PREFORMED.....	1

END OF FIGURE

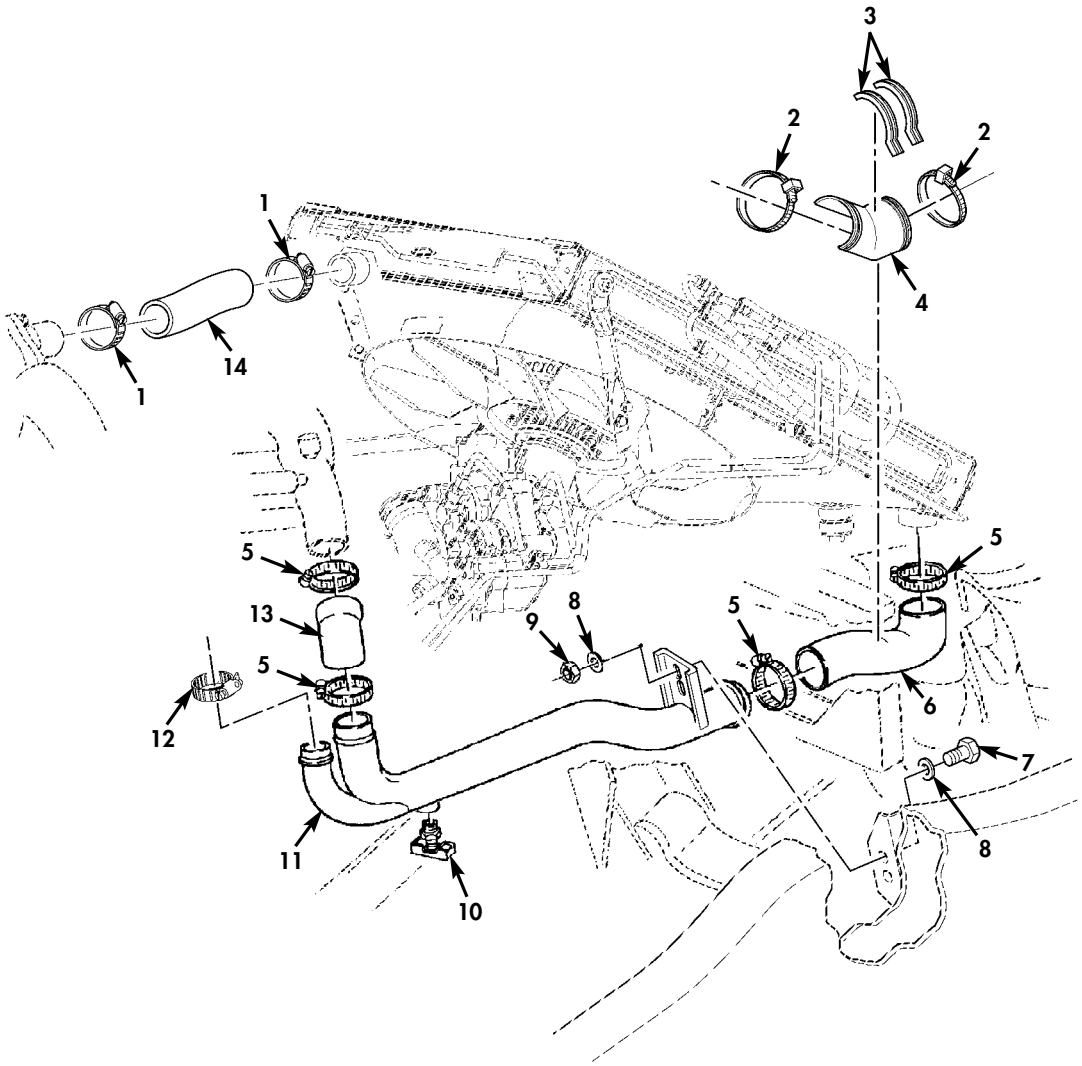

Figure 40A. Radiator Hoses and Related Parts (Serial Number 300000 and Above).

(1) ITEM NO	(2) SMR CODE	(3) NSN	(4) CAGEC	(5) PART NUMBER	(6) DESCRIPTION AND USABLE ON CODES(UOC)	(7) QTY
					GROUP 0503 WATER MANIFOLD,HEADERS, THERMOSTATS AND HOUSING GASKET	
					FIG. 40A RADIATOR HOSES AND RELATED PARTS(SERIAL NUMBER 300000 AND ABOVE)	
* 1	PAOZZ	4730015658006	76599	TSS28S30	CLAMP,HOSE..... UOC:TTA,TTT,TT1,UUA,UUU,UU1,UU2	2
* 2	PAOZZ	5975009856630	96906	MS3367-3-0	STRAP,TIEDOWN,ELECT..... UOC:TTA,TTT,TT1,UUA,UUU,UU1,UU2	2
* 3	PAOZZ	2590015657676	19207	12339902-12	PAD,CUSHIONING..... UOC:TTA,TTT,TT1,UUA,UUU,UU1,UU2	2
* 4	PAOZZ	4720015658135	34623	6041631	GUARD,HOSE-TUBING..... UOC:TTA,TTT,TT1,UUA,UUU,UU1,UU2	1
* 5	PAOZZ	4730015657997	76599	TSS32S30	CLAMP,HOSE..... UOC:TTA,TTT,TT1,UUA,UUU,UU1,UU2	4
* 6	PAOZZ	4720015658134	34623	6043025	HOSE,PERFORMED LOWER..... UOC:TTA,TTT,TT1,UUA,UUU,UU1,UU2	1
* 7	PAOZZ	5305000680508	80204	B1821BH025C075N	SCREW,CAP,HEXAGON H 1/4-20 X 3/4... UOC:TTA,TTT,TT1,UUA,UUU,UU1,UU2	2
* 8	PAOZZ	5310011023270	34623	2436161	WASHER,FLAT 1/4..... UOC:TTA,TTT,TT1,UUA,UUU,UU1,UU2	4
* 9	PAOZZ	5310000614650	80205	M45913/3-4CG8C	NUT,SELF-LOCKING,HE 1/4-20..... UOC:TTA,TTT,TT1,UUA,UUU,UU1,UU2	2
* 10	PAOZZ	4820007529040	58536	AA594401/1-004	COCK,DRAIN..... UOC:TTA,TTT,TT1,UUA,UUU,UU1,UU2	1
* 11	PAOZZ	4710015658003	34623	6033126	TUBE,BENT METALLIC LOWER..... UOC:TTA,TTT,TT1,UUA,UUU,UU1,UU2	1
* 12	PAOZZ	4730009083194	19207	12345009-1	CLAMP,HOSE..... UOC:TTA,TTT,TT1,UUA,UUU,UU1,UU2	1
* 13	PAOZZ	4720011881370	19207	12339159	HOSE,PREFORMED LOWER..... UOC:TTA,TTT,TT1,UUA,UUU,UU1,UU2	1
* 14	PAOZZ	4720015657612	34623	6038808	HOSE,PREFORMED UPPER..... UOC:TTA,TTT,TT1,UUA,UUU,UU1,UU2	1

END OF FIGURE

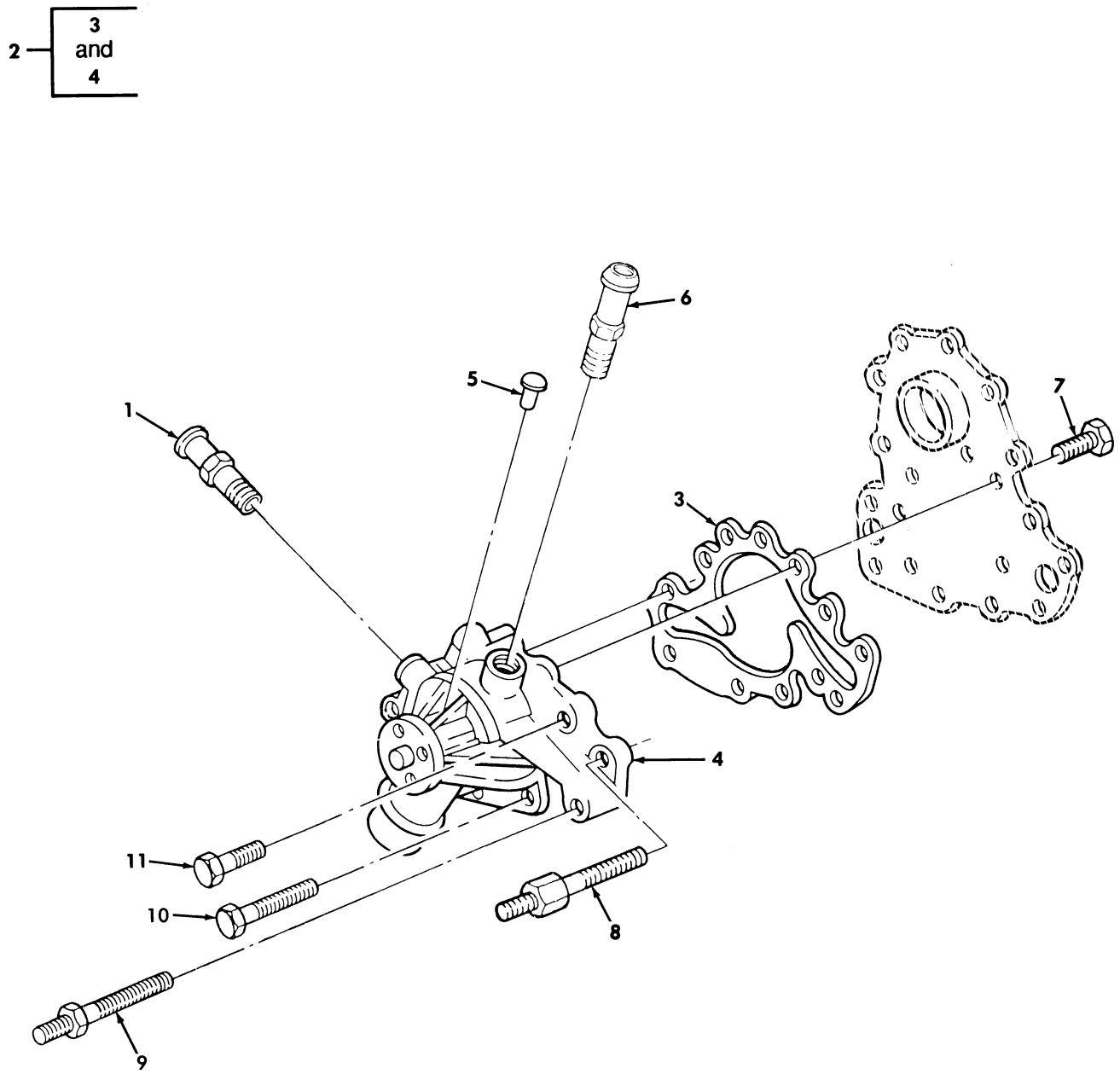

Figure 41. Water Pump and Attaching Hardware.

(1) ITEM NO	(2) SMR CODE	(3) NSN	(4) CAGEC	(5) PART NUMBER	(6) DESCRIPTION AND USABLE ON CODES(UOC)	(7) QTY
					GROUP 0504 WATER PUMP	
					FIG. 41 WATER PUMP AND ATTACHING HARDWARE	
* 1	PAOZZ	4730011482758	19207	12339396	ADAPTER,STRAIGHT,PI.....	1
* 2	PAOZZ	2930014936007	61298	88894036	PUMP,COOLING SYSTEM.....	1
3	PAOZZ	5330014763866	7X677	12553488	.GASKET 6.5 LITER.....	1
4	XAOZZ		7X677	12553484	.PUMP,COOLING SYSTEM.....	1
5	PFOZZ	5320012180721	7X677	193620	RIVET,SOLID 1/4 X 1/2.....	1
6	PAOZZ	4730011826565	7X677	3739798	ADAPTER,STRAIGHT,PI.....	1
7	PAOZZ	5305011491938	7X677	11500815	SCREW,CAP,HEXAGON H 6.5 LITER,8-1.25 X 16MM.....	6
8	PAOZZ	5307012079004	7X677	23500032	STUD SPECIAL 10-1.5 X 89 X 15MM....	1
9	PAOZZ	5307011787445	7X677	14071080	STUD,SHOULDERED 10-1.5 X 25 X 17MM.	1
9	PAOZZ	5307011787445	7X677	14071080	STUD,SHOULDERED SERIAL NUMBER 196901 AND ABOVE.....	3
10	PAOZZ	5305014108158	7X677	10049638	SCREW,CAP,HEXAGON H 10-1.5 X 90MM..	2
11	PAOZZ	5306011501190	7X677	11500921	BOLT,MACHINE 10-1.5 X 40 MM.....	2

END OF FIGURE

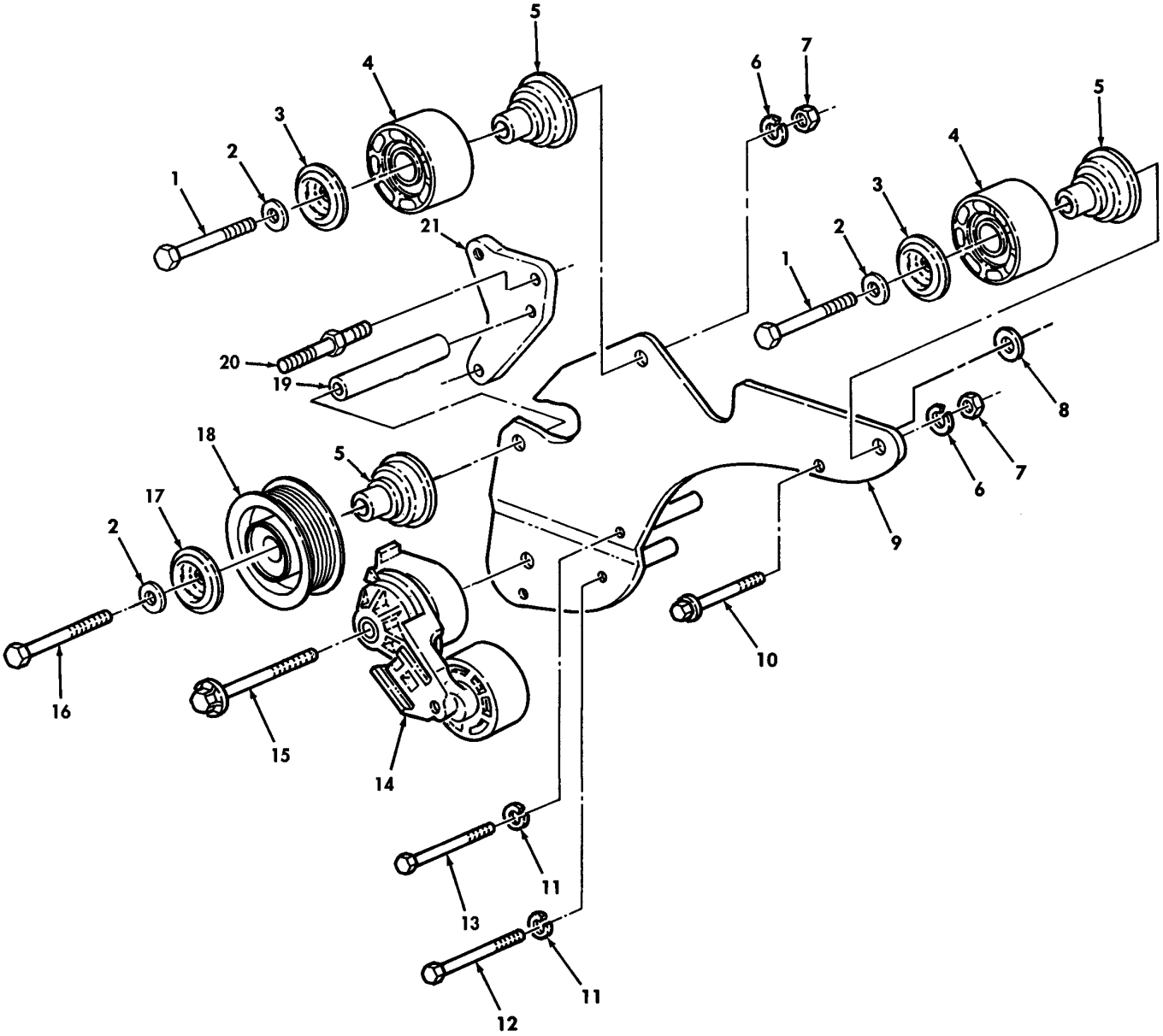

FOR M1114 SEE FIGURE 273

Figure 42. Tensioner, Idler Pulley, and Mounting Hardware (Serial Number 196900 and Below).

(1) ITEM NO	(2) SMR CODE	(3) NSN	(4) CAGEC	(5) PART NUMBER	(6) DESCRIPTION AND USABLE ON CODES(UOC)	(7) QTY
					GROUP 0505 FAN ASSEMBLY	
					FIG. 42 TENSIONER,IDLER PULLEY,AND MOUNTING HARDWARE (SERIAL NUMBER 196900 AND BELOW)	
1	PAOZZ	5305000712074	80204	B1821BH050C275N	SCREW,CAP,HEXAGON H 1/2-13 x 2.75.. UOC:XAA	2
* 2	PAOZZ	5310008095998	80063	SCD13617-8	WASHER,FLAT..... UOC:XAA	4
3	PAOZZ	3020014580185	34623	RCSK18627	COVER,IDLER PULLEY..... UOC:XAA	2
4	PAOZZ	3020014621202	34623	RCSK18628	PULLEY,FLAT..... UOC:XAA	2
* 5	PAOZZ	3020014580176	19207	12469108	SPACER,IDLER PULLEY..... UOC:XAA	3
6	PAOZZ	5310004829493	24617	120384	WASHER,LOCK..... UOC:XAA	3
7	PAOZZ	5310014654525	24617	9418753	NUT,PLAIN,HEXAGON..... UOC:XAA	3
8	PAOZZ	5310014804161	34623	5934761	WASHER,SHOULDERED..... UOC:XAA	1
9	PAOZZ	2590014443317	34623	RCSK18278-6	BRACKET,VEHICULAR C..... UOC:XAA	1
10	PAOZZ	5306014731895	24617	11501619	BOLT,MACHINE..... UOC:XAA	1
11	PAOZZ	5310012067306	7X677	11500207	WASHER,LOCK..... UOC:XAA	2
12	PAOZZ	5306014327900	24617	11504617	BOLT,MACHINE..... UOC:XAA	1
13	PAOZZ	5306014472568	24617	11504594	BOLT,MACHINE..... UOC:XAA	1
14	PAOZZ	2920014207894	15434	3802287	TENSIONER..... UOC:XAA	1
15	PAOZZ	5305013601136	73342	11505328	SCREW,CAP,HEXAGON H..... UOC:XAA	1
16	PAOZZ	5305014805408	80204	B1821BH050C775N	SCREW,CAP,HEXAGON H 1/2-13 x 7.75.. UOC:XAA	1
17	PAOZZ	3020014808698	34623	12380024	RETAINER,PULLEY..... UOC:XAA	1
* 18	PAOZZ	3020014821834	34623	12380007	PULLEY,GROOVE..... UOC:XAA	1
19	PAOZZ	5365014805282	34623	RCSK18683	SPACER,SLEEVE..... UOC:XAA	1
20	PAOZZ	5307014084029	19207	12342545	STUD,SHOULDERED..... UOC:XAA	1
* 21	PAOZZ	5340014810558	19207	12469107	BRACKET,MOUNTING..... UOC:XAA	1

END OF FIGURE

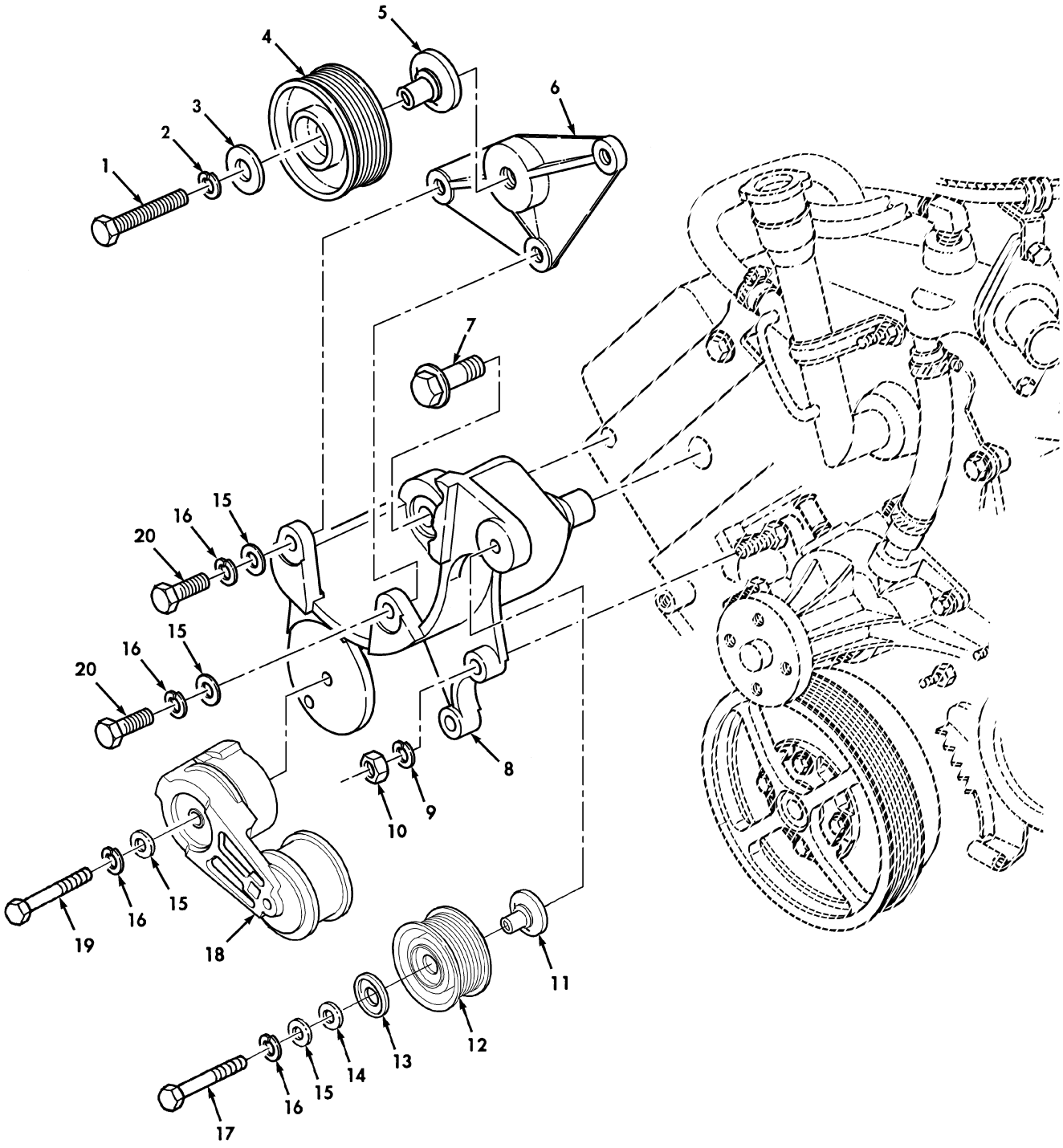

Figure 42A. Idler Pulley Bracket, Tensioner, and Related Parts (Serial Number 196901 and Above).

(1) ITEM NO	(2) SMR CODE	(3) NSN	(4) CAGEC	(5) PART NUMBER	(6) DESCRIPTION AND USABLE ON CODES(UOC)	(7) QTY
					GROUP 0505 FAN ASSEMBLY	
					FIG. 42A IDLER PULLEY BRACKET, TENSIONER,AND RELATED PARTS (SERIAL NUMBER 196901 AND ABOVE)	
* 1	PAOZZ	5305000712075	80204	B1821BH050C300N	SCREW,CAP HEXAGON H .050-13 X 3.00. UOC:XAA	1
* 2	PAOZZ	5310005845272	96906	MS35338-48	WASHER,LOCK..... UOC:XAA	1
* 3	PAOZZ	3020014888698	19207	12380024	RETAINER,PULLEY..... UOC:XAA	1
* 4	PAOZZ	3020014441665	19207	12380007	PULLEY,GROOVE..... UOC:XAA	1
* 5	PAOZZ	3020014580176	34623	RCSK18626	SPACER,IDLER PULLEY..... UOC:XAA	1
* 6	PAOZZ	5340014972269	19207	12469476	BRACKET,MOUNTING..... UOC:XAA	1
* 7	PAOZZ	5306012705448	19207	12340845-3	SCREW,CAP HEXAGON H ..... UOC:XAA	2
* 8	PAOZZ	5340014886181	34623	12469498	BRACKET,TENSIONER..... UOC:XAA	1
* 9	PAOZZ	5310012067306	7X677	11500207	WASHER,LOCK..... UOC:XAA	2
* 10	PAOZZ	5310013663539	80204	B18241B100	NUT,PLAIN HEXAGON..... UOC:XAA	2
* 11	PAOZZ	5365014885640	34623	12469473	SPACER,STEPPED..... UOC:XAA	1
* 12	PAOZZ	3020014910076	001Y9	600635	PULLEY,FLAT..... UOC:XAA	1
* 13	PAOZZ	5340014912205	001Y9	600638	BOOT,DUST AND MOIST..... UOC:XAA	1
* 14	PAOZZ	5310000120388	24617	120388	WASHER,FLAT..... UOC:XAA	1
* 15	PAOZZ	5310014124013	24617	2436163	WASHER,FLAT..... UOC:XAA	5
* 16	PAOZZ	5310006379541	96906	MS35338-46	WASHER,LOCK..... UOC:XAA	5
* 17	PAOZZ	5305005432866	80204	B1821BH038C250N	SCREW,CAP HEXAGON H .375-16 X 2.50. UOC:XAA	1
* 18	PAOZZ	2920014912011	001Y9	600637	ARM,ADJUSTING..... UOC:XAA	1
* 19	PAOZZ	5305007813927	80204	B1821BH038C350N	SCREW,CAP HEXAGON H..... UOC:XAA	1
* 20	PAOZZ	5305007252317	80204	B1821BH038C150N	BOLT,MACHINE .375-16 X 1.50..... UOC:XAA	3

END OF FIGURE

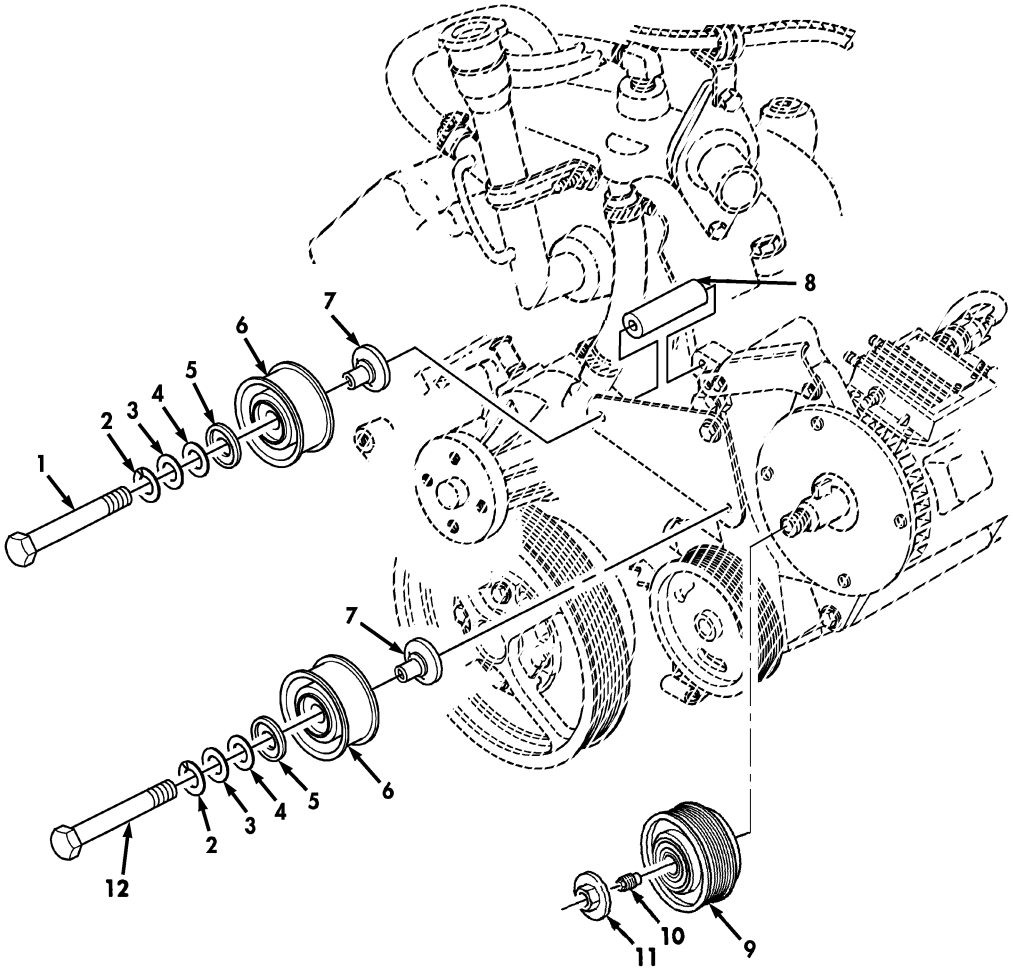

Figure 42B. Idler Pulleys and Mounting Hardware (Serial Number 196901 and Above).

(1) ITEM NO	(2) SMR CODE	(3) NSN	(4) CAGEC	(5) PART NUMBER	(6) DESCRIPTION AND USABLE ON CODES(UOC)	(7) QTY
					GROUP 0505 FAN ASSEMBLY	
					FIG. 42B IDLER PULLEYS AND MOUNTING HARDWARE (SERIAL NUMBER 196901 AND ABOVE)	
1	PAOZZ	5305014753154	80204	B1821BH038C700N	SCREW,CAP,HEXAGON H 3/8-16 x 7.00..	1
2	PAOZZ	5310006379541	80205	MS35338-46	WASHER,LOCK 3/8.....	2
3	PAOZZ	5310014124013	24617	2436163	WASHER,FLAT 3/8.....	2
4	PAOZZ	5310000120388	24617	120388	WASHER,FLAT	2
5	PAOZZ	5340014912205	19207	12469486	BOOT,DUST AND MOIST.....	2
6	PAOZZ	3020014912659	001Y9	600636	PULLEY,FLAT.....	2
7	PAOZZ	5365014885640	19207	12469473	SPACER,STEPPED.....	2
8	PAOZZ	5365014885594	19207	12338186-88	SPACER.....	1
9	PAOZZ	3020014912671	001Y9	600634	PULLEY,GROOVE.....	1
* 10	PAOZZ	5310014907461	001Y9	600639	ADAPTER,CLUTCH.....	1
* 11	PAOZZ	5310219215930	001Y9	600641	NUT,PLAIN PLATE.....	1
12	PAOZZ	5305005432866	80204	B1821BH038C250N	SCREW,CAP,HEXAGON H 3/8-16 x 2.50..	1

END OF FIGURE

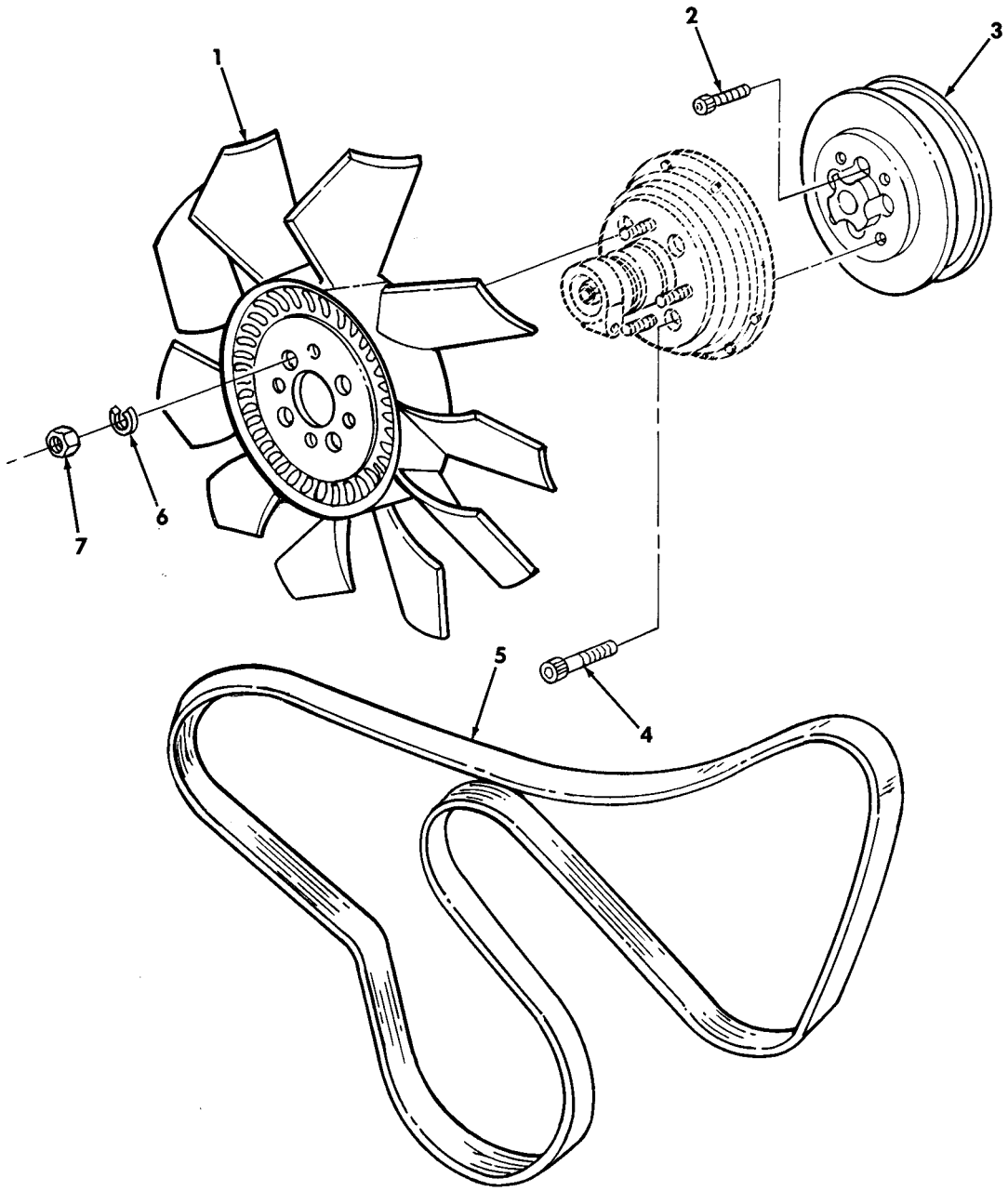

FOR TRUCKS ABOVE SERIAL
NUMBER 300000 SEE
FIGURE 44A

Figure 43. Fan Assembly and Serpentine Belt.

(1) ITEM NO	(2) SMR CODE	(3) NSN	(4) CAGEC	(5) PART NUMBER	(6) DESCRIPTION AND USABLE ON CODES(UOC)	(7) QTY
					GROUP 0505 FAN ASSEMBLY	
					FIG. 43 FAN ASSEMBLY AND SERPENTINE BELT	
1	PAOZZ	2930014208622	51377	4735-42599-103	IMPELLER,FAN,AXIAL.....	1
2	PAOZZ	5305011893769	19207	12339240	SCREW,CAP SOCKET HE 8-1.25 X 20MM..	4
* 3	PAOZZ	3020014885638	19207	12469472	PULLEY,FLAT SERIAL NUMBER 196901 AND ABOVE.....	1
* 3	PAOZZ	3020014427278	34623	RCSK18221	PULLEY,FLAT SERIAL NUMBER 196900 AND BELOW.....	1
4	PAOZZ	5305003663337	24617	138242	SCREW 3/8-16 X 1.00.....	4
* 5	PAOZZ	3030014885606	0AKY3	20-9646	BELT,SERPENTINE SERIAL NUMBER 196901 AND ABOVE.....	1
* 5	PAOZZ	3030014669476	0AKY3	20-8021	BELT,V ALL WEATHER SERIAL NUMBER 196900 AND BELOW.....	1
6	PAOZZ	5310006376541	96906	MS35338-46	WASHER,LOCK 3/8.....	4
7	PAOZZ	5310011904607	51377	3030-00364-01	NUT,PLAIN HEXAGON 3/8-16.....	4

END OF FIGURE

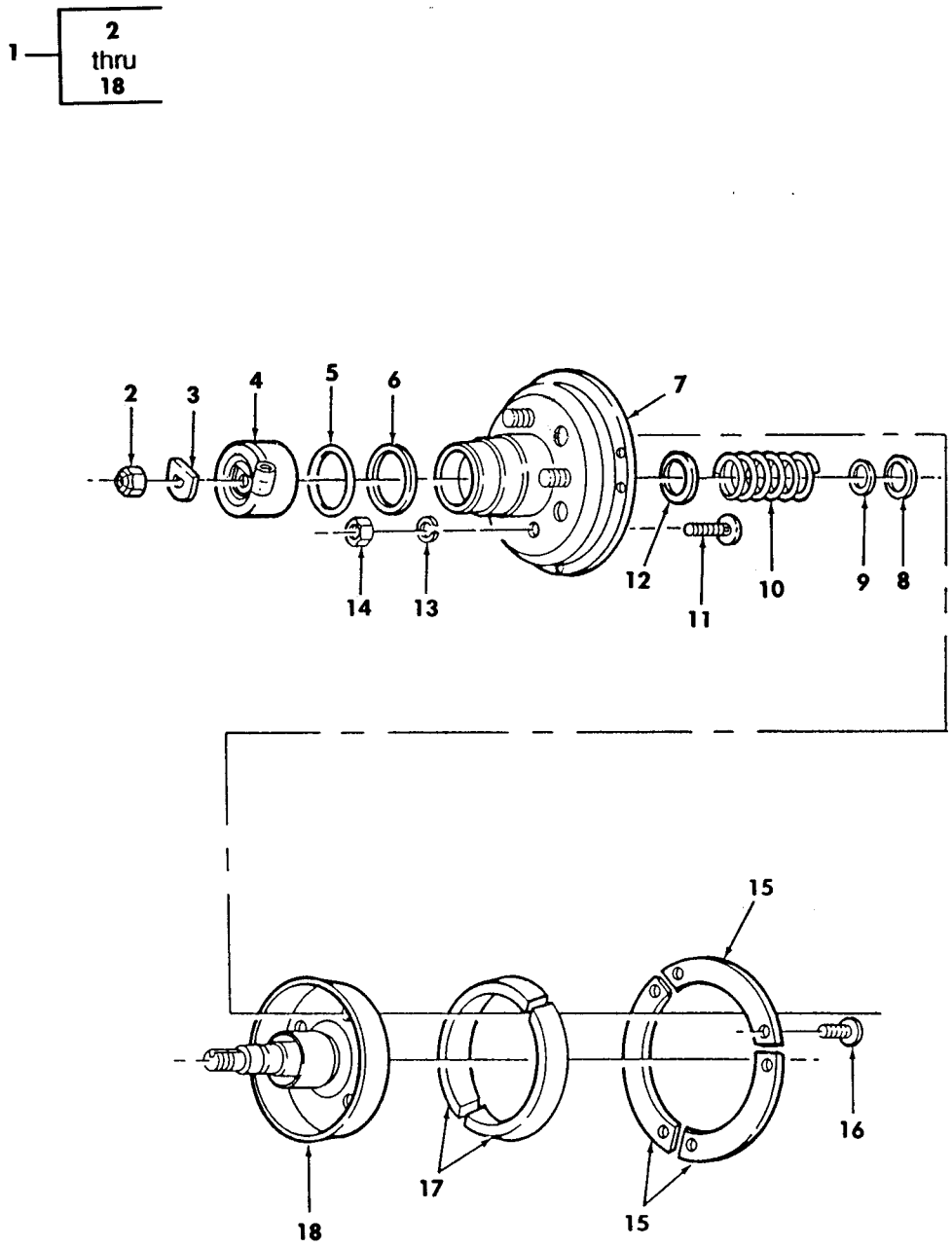

Figure 44. Fan Drive (Serial Number 299999 and Below).

(1) ITEM NO	(2) SMR CODE	(3) NSN	(4) CAGEC	(5) PART NUMBER	(6) DESCRIPTION AND USABLE ON CODES(UOC)	(7) QTY
					GROUP 0505 FAN ASSEMBLY	
					FIG. 44 FAN DRIVE (SERIAL NUMBER 299999 AND BELOW)	
1	PAOFF	2930011687870	51377	1090-06404-01	IMPELLER,FAN,AXIAL.....	1
2	PAFZZ	5310011940481	51377	3029-01371-01	.NUT,SELF-LOCKING,HE.....	1
3	PAFZZ	5310011898468	34623	5740253	.WASHER,FLAT.....	1
4	PAFZZ	2930011891744	51377	4043-38443-01	.CYLINDER ASSEMBLY,F.....	1
5	PAFZZ	5331011928892	51377	3018-01265-01	.O-RING.....	1
6	PAFZZ	5330012478438	51377	3018-01339-01	.SEAL,DUST.....	1
7	XAFZZ		51377	4040-38442-01	.HOUSING ASSEMBLY.....	1
8	PAFZZ	5331011951500	51377	9002-00741-58	.O-RING.....	1
9	PAFZZ	5331011948966	51377	9002-00181-48	.O-RING.....	1
10	PAFZZ	5360011906214	34623	5740278	.SPRING,HELICAL,COMP.....	1
11	PAFZZ	5307011905854	51377	3051-01405-01	.STUD,PLAIN 3/8-16 X 1.16.....	4
12	PAFZZ	5330012520461	51377	3018-01425-01	.SEAL,PLAIN ENCASED.....	1
13	PAOZZ	5310006379541	96906	MS35338-46	.WASHER,LOCK 3/8.....	4
14	PAOZZ	5310011904607	51377	3030-00364-01	.NUT,PLAIN,HEXAGON 3/8-16.....	4
15	XAOZZ		51377	4073-38424-01	.LINING,FAN CLUTCH.....	1
16	PAOZZ	5305000526456	80205	MS16996-10	.SCREW,CAP,SOCKET HE.....	6
17	PAOZZ	2930011898643	51377	4026-38368-01	.LINING,FRICTION.....	2
18	XAFZZ		51377	4079-38441-01	.SHAFT ASSEMBLY.....	1

END OF FIGURE

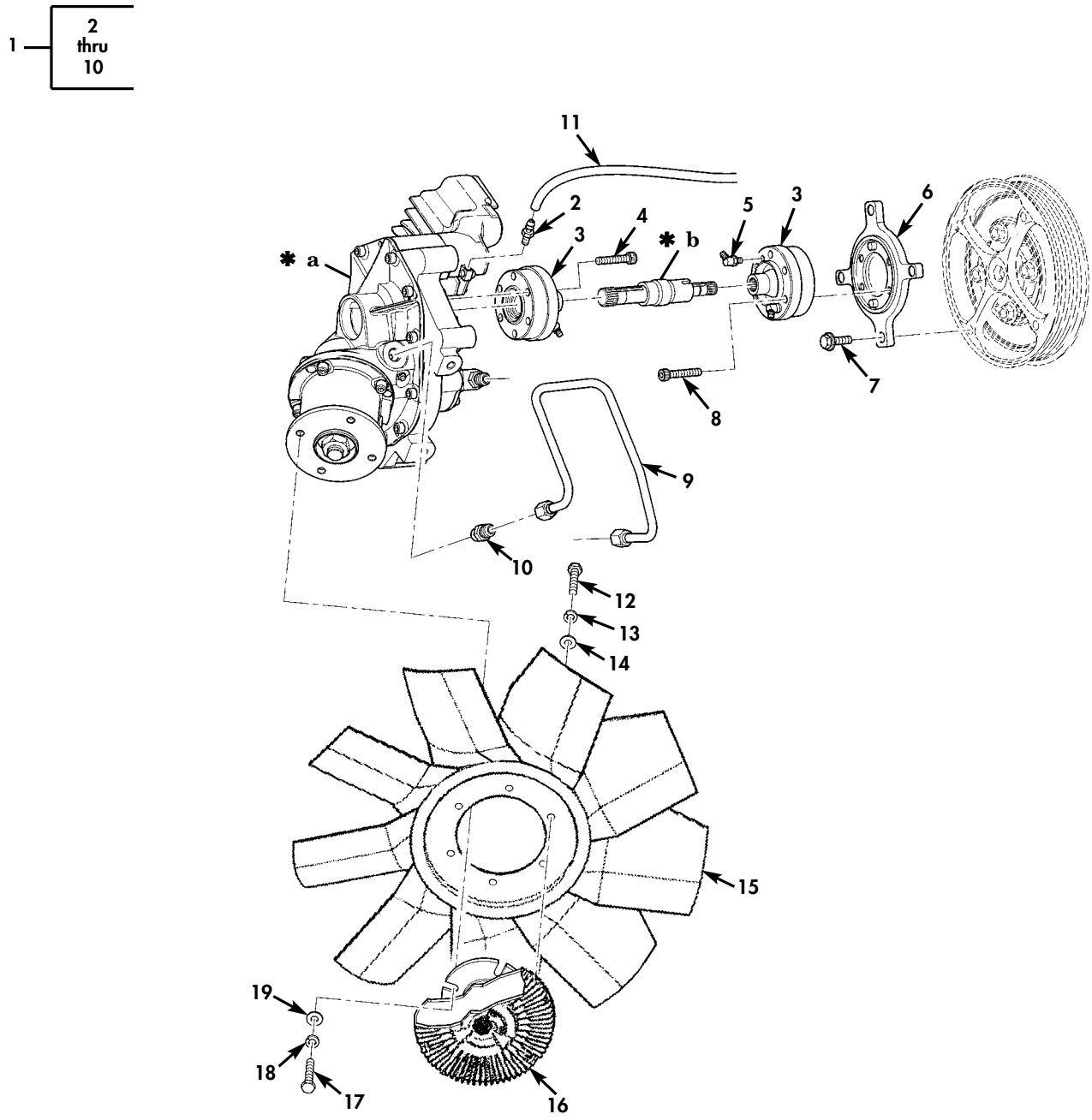

✱ **a** PART OF ITEM 1
✱ **b** PART OF ITEM 3

Figure 44A. Geared Fan Drive (Serial Number 300000 and Above) (Sheet 1 of 2).

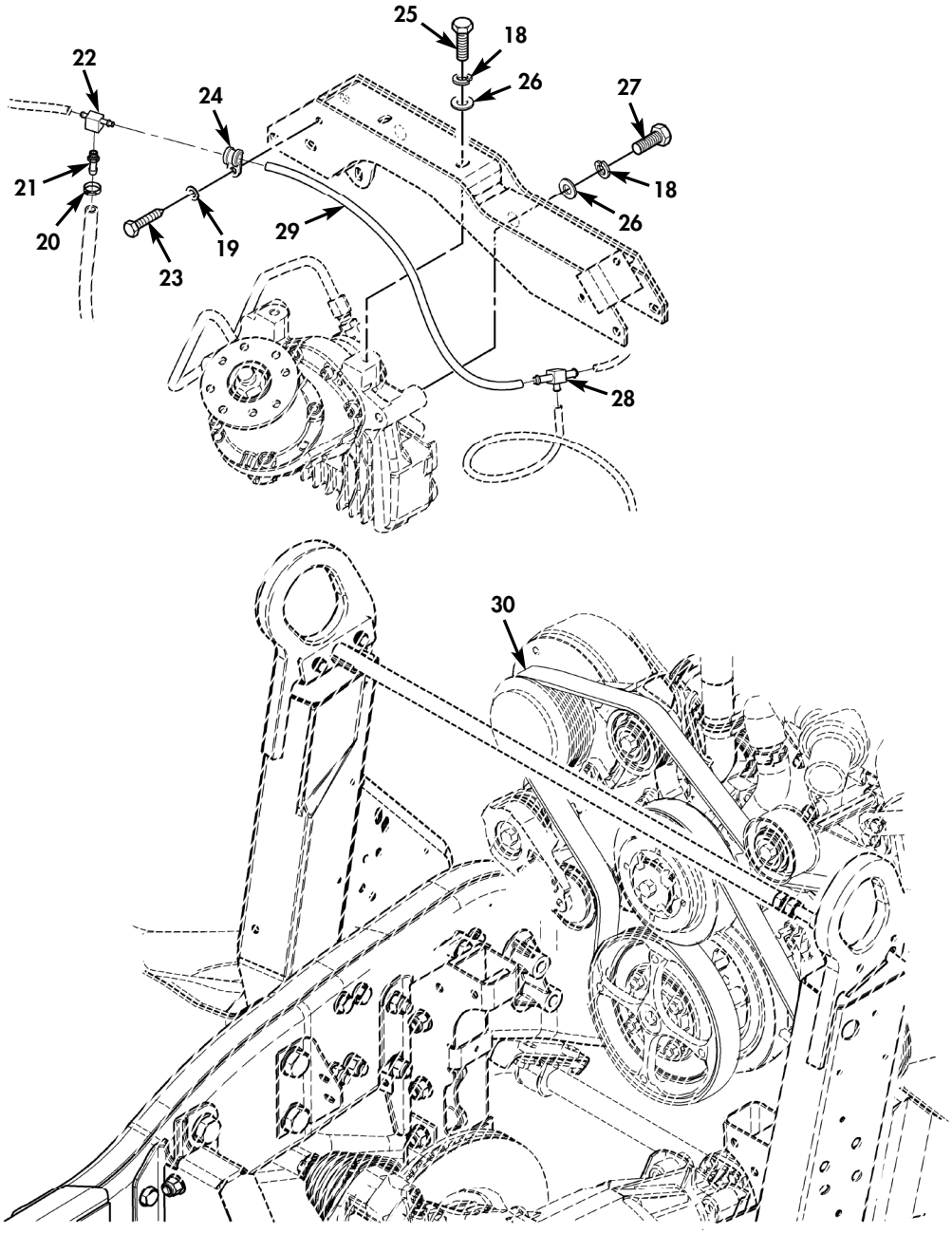

Figure 44A. Geared Fan Drive (Serial Number 300000 and Above) (Sheet 2 of 2).

(1) ITEM NO	(2) SMR CODE	(3) NSN	(4) CAGEC	(5) PART NUMBER	(6) DESCRIPTION AND USABLE ON CODES(UOC)	(7) QTY
					GROUP 0505 FAN ASSEMBLY	
					FIG. 44A GEARED FAN DRIVE(SERIAL NUMBER 300000 AND ABOVE)	
* 1	PAOFF		34623	6044183	CLUTCH,FAN,ENGINE COOLING..... UOC:TTA,TTT,TT1,UUA,UUU,UU1,UU2	1
* 2	PAOZZ	4730011855348	19207	12339978	.ADAPTER,STRAIGHT,PI..... UOC:TTA,TTT,TT1,UUA,UUU,UU1,UU2	1
* 3	PAOZZ	3040015658358	34623	6025464	.SHAFT ASSEMBLY,STRA..... UOC:TTA,TTT,TT1,UUA,UUU,UU1,UU2	1
* 4	PFOZZ	5305015658806	34623	6041305	.SCREW,CAP,SOCKET HE M8-1.25 X 45MM UOC:TTA,TTT,TT1,UUA,UUU,UU1,UU2	6
* 5	PAOZZ	4730015699915	6H404	52-068	.FITTING,LUBRICATION..... UOC:TTA,TTT,TT1,UUA,UUU,UU1,UU2	4
* 6	PAOZZ	2930015658925	34623	6022876	.HUB,FAN CLUTCH..... UOC:TTA,TTT,TT1,UUA,UUU,UU1,UU2	1
* 7	PAOZZ	5306012638889	19207	12340845-2	.BOLT,MACHINE M10-1.5 x 30MM..... UOC:TTA,TTT,TT1,UUA,UUU,UU1,UU2	4
* 8	PFOZZ	5305015657316	34623	6030287	.SCREW,CAP,SOCKET HE M8-1.00 X 40MM UOC:TTA,TTT,TT1,UUA,UUU,UU1,UU2	4
* 9	PAOZZ	4710015657633	34623	6019008	.TUBE,METALLIC..... UOC:TTA,TTT,TT1,UUA,UUU,UU1,UU2	1
* 10	PAOZZ	4730004919576	96906	MS51525-A6	.ADAPTER,STRAIGHT,TU..... UOC:TTA,TTT,TT1,UUA,UUU,UU1,UU2	2
* 11	MOOZZ		19207	CPR104420-1-11IN	TUBING,NONMETALLIC MAKE FROM TUBING P/N CPR104420-1,11 INCHES LONG..... UOC:TTA,TTT,TT1,UUA,UUU,UU1,UU2	1
* 12	PAOZZ	5306002264825	80204	B1821BH031C075N	BOLT,MACHINE 5/16-18 X 3/4..... UOC:TTA,TTT,TT1,UUA,UUU,UU1,UU2	6
* 13	PAOZZ	5310004079566	80205	MS35338-45	WASHER,LOCK 5/16..... UOC:TTA,TTT,TT1,UUA,UUU,UU1,UU2	6
* 14	PAOZZ	5310000814219	96906	MS27183-12	WASHER,FLAT 5/16..... UOC:TTA,TTT,TT1,UUA,UUU,UU1,UU2	6
* 15	PAOZZ	2930015657984	51377	4735-43782-18	IMPELLER,FAN,AXIAL..... UOC:TTA,TTT,TT1,UUA,UUU,UU1,UU2	1
* 16	PAOZZ	2930015658355	51377	1210-09167-51	CLUTCH,FAN,ENGINE..... UOC:TTA,TTT,TT1,UUA,UUU,UU1,UU2	1
* 17	PAOZZ	5305005434372	80204	B1821BH038C075N	SCREW,CAP,HEXAGON H 3/8-16 X 3/4... UOC:TTA,TTT,TT1,UUA,UUU,UU1,UU2	4
* 18	PAOZZ	5310000045033	80205	MS35338-46	WASHER,LOCK 3/8..... UOC:TTA,TTT,TT1,UUA,UUU,UU1,UU2	9
* 19	PAOZZ	5310000806004	96906	MS27183-14	WASHER,FLAT 3/8..... UOC:TTA,TTT,TT1,UUA,UUU,UU1,UU2	5
* 20	PAOZZ	4730012102732	34623	5934854	CLAMP,HOSE..... UOC:TTA,TTT,TT1,UUA,UUU,UU1,UU2	1
* 21	PAOZZ	4730013948345	34623	12340331	ADAPTER,STRAIGHT,PI..... UOC:TTA,TTT,TT1,UUA,UUU,UU1,UU2	1
* 22	PAOZZ	4730011928086	01276	1077X4	TEE,PIPE TO HOSE..... UOC:TTA,TTT,TT1,UUA,UUU,UU1,UU2	1
* 23	PAOZZ	5305013936311	24617	271153	SCREW,TAPPING 3/8-16 X 5/8..... UOC:TTA,TTT,TT1,UUA,UUU,UU1,UU2	1
* 24	PAOZZ	5340000509077	96906	MS21333-119	CLAMP,LOOP.....	1

(1) ITEM NO	(2) SMR CODE	(3) NSN	(4) CAGEC	(5) PART NUMBER	(6) DESCRIPTION AND USABLE ON CODES(UOC)	(7) QTY
					UOC:TTA,TTT,TT1,UUA,UUU,UU1,UU2	
* 25	PAOZZ	5305005432866	80204	B1821BH038C250N	SCREW,CAP,HEXAGON H 3/8-16 X 2.50..	2
					UOC:TTA,TTT,TT1,UUA,UUU,UU1,UU2	
* 26	PAOZZ	5310014124013	24617	2436163	WASHER,FLAT 3/8.....	5
					UOC:TTA,TTT,TT1,UUA,UUU,UU1,UU2	
* 27	PAOZZ	5305000680511	80204	B1821BH038C125N	SCREW,CAP,HEXAGON H 3/8-16 X 1.25..	3
					UOC:TTA,TTT,TT1,UUA,UUU,UU1,UU2	
* 28	PAOZZ	4730010035105	93061	224-4-5/32	TEE,HOSE.....	1
					UOC:TTA,TTT,TT1,UUA,UUU,UU1,UU2	
* 29	MOOZZ		19207	CPR104420-1-16IN	TUBING,NONMETALLIC MAKE FROM TUBE	1
					P/N CPR104420-1,16 INCHES LONG.....	
					UOC:TTA,TTT,TT1,UUA,UUU,UU1,UU2	
* 30	PAOZZ	3030014885606	0AKY3	20-9646	BELT,V.....	1
					UOC:TTA,TTT,TT1,UUA,UUU,UU1,UU2	

END OF FIGURE

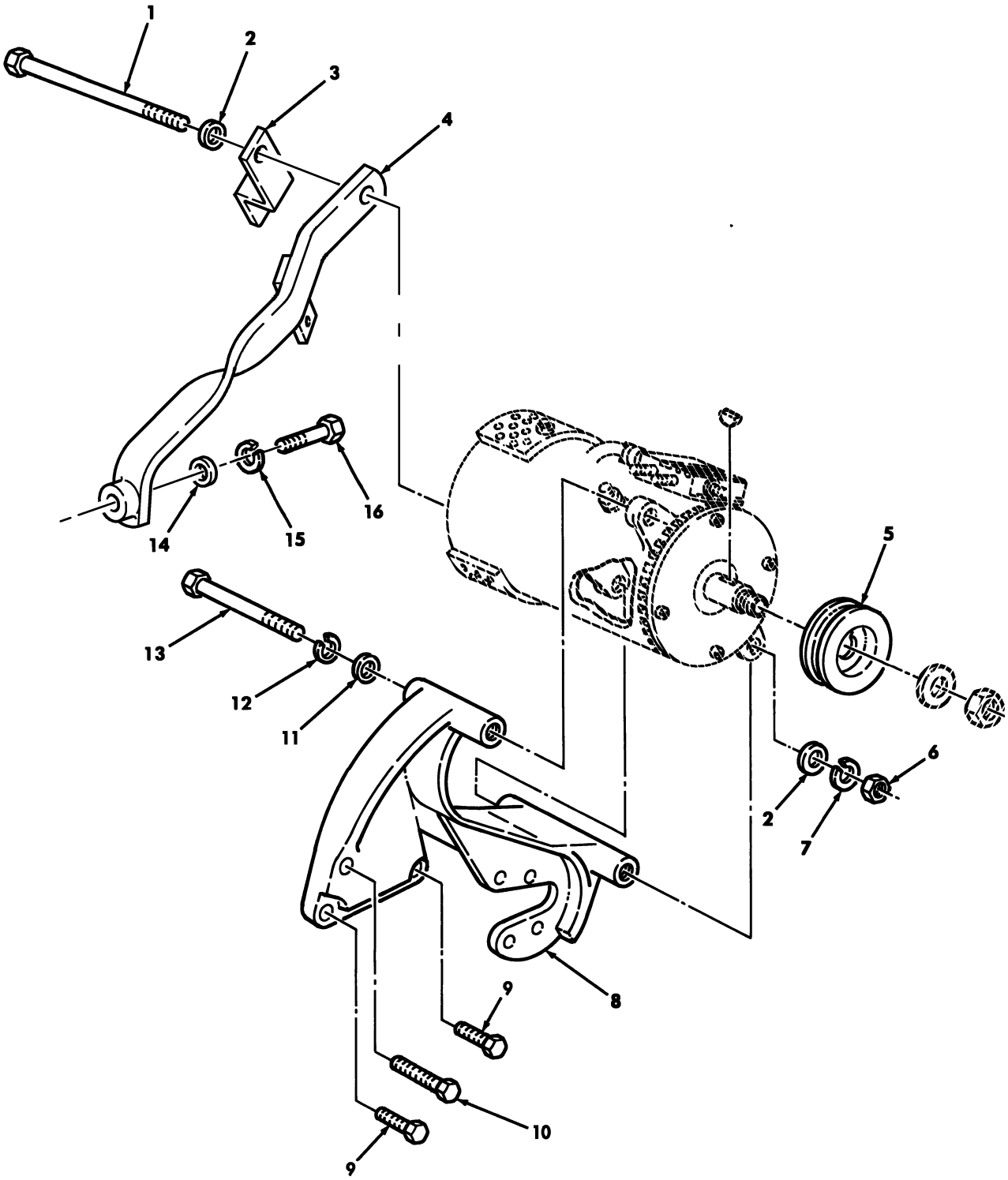

Figure 45. 200 AMP Alternator (Niehoff) Mounting Hardware.

(1) ITEM NO	(2) SMR CODE	(3) NSN	(4) CAGEC	(5) PART NUMBER	(6) DESCRIPTION AND USABLE ON CODES(UOC)	(7) QTY
					GROUP 06 ELECTRICAL SYSTEM 0601 GENERATOR: ALTERNATOR	
					FIG. 45 200 AMP ALTERNATOR (NIEHOFF) MOUNTING HARDWARE	
1	PAOZZ	5305014299149	80204	B1821BH044F975N	SCREW,CAP,HEXAGON H 7/16-20 X 9.75.	1
2	PAOZZ	5310008094085	96906	MS27183-16	WASHER,FLAT 1/2.....	2
* 3	PAOZZ	5340012925402	19207	12342076	BRACKET,DOUBLE ANGL SERIAL NUMBER 196900 AND BELOW.....	1
* 4	PAOZZ	5342014468954	34623	12460273	BRACKET,MOUNTING.....	1
* 5	PAOZZ	3020014445447	34623	RCSK-18685	PULLEY,GROOVE SERIAL NUMBER 196900 AND BELOW.....	1
* 6	PAOZZ	5310014573171	24617	9417028	NUT,PLAIN,HEXAGON 7/16-20.....	1
* 7	PAOZZ	5310002090965	96906	MS35338-47	WASHER,LOCK .438.....	1
* 8	PAOZZ	2920014442749	34623	RCSK18268	ARM,ADJUSTING,BELT SERIAL NUMBER 196900 AND BELOW.....	1
* 9	PAOZZ	5306012638889	19207	12340845-2	BOLT,MACHINE M10-1.5 X 30MM SERIAL NUMBER 196900 AND BELOW.....	2
* 10	PAOZZ	5306012705448	19207	12340845-3	BOLT,MACHINE 10-1.5 X 45 MM SERIAL NUMBER 196900 AND BELOW.....	1
* 11	PAOZZ	5310014124013	24617	2436163	WASHER,FLAT 3/8 SERIAL NUMBER 196900 AND BELOW.....	1
* 12	PAOZZ	5310006379541	96906	MS35338-46	WASHER,LOCK 3/8 SERIAL NUMBER 196900 AND BELOW.....	1
* 13	PAOZZ	5305000680510	80204	B1821BH038C100N	SCREW,CAP,HEXAGON H 3/8-16 X 1.00 SERIAL NUMBER 196900 AND BELOW.....	1
* 14	PAOZZ	5310000806004	96906	MS27183-14	WASHER,FLAT.....	1
* 15	PAOZZ	5310012067306	7X677	11500207	WASHER,LOCK.....	1
* 16	PAOZZ	5305012433759	7X677	14060130	SCREW,CAP,HEXAGON H.....	1

END OF FIGURE

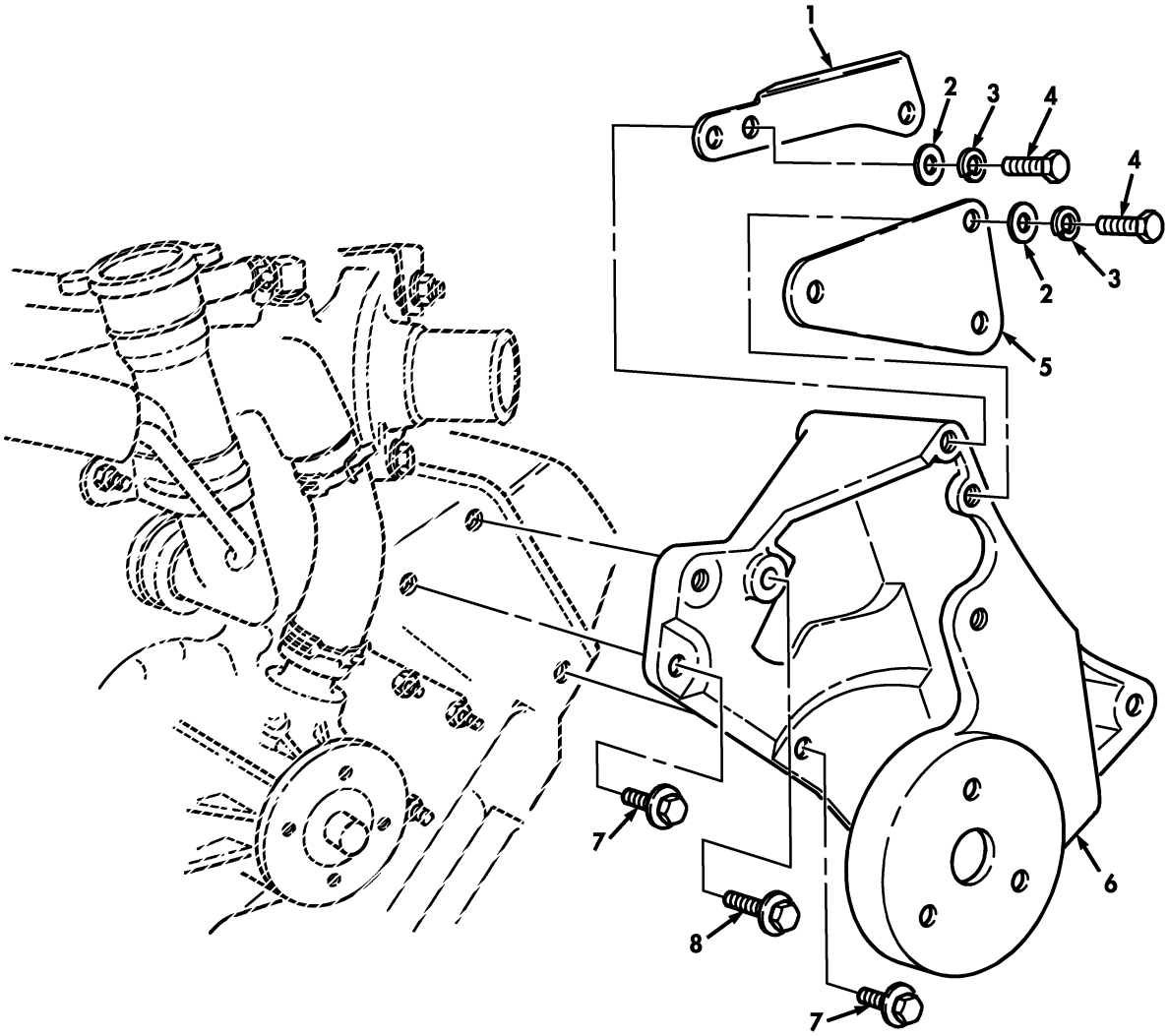

Figure 45A. Alternator/Power Steering Pump Mounting Bracket and Related Parts (Serial Number 196901 and Above).

(1) ITEM NO	(2) SMR CODE	(3) NSN	(4) CAGEC	(5) PART NUMBER	(6) DESCRIPTION AND USABLE ON CODES(UOC)	(7) QTY
					GROUP 06 ELECTRICAL SYSTEM	
					0601 GENERATOR:ALTERNATOR	
					FIG. 45A ALTERNATOR/POWER STEERING PUMP MOUNTING BRACKET AND RELATED PARTS (SERIAL NUMBER 196901 AND ABOVE)	
* 1	PAOZZ	5340014886073	34623	12469475	BRACKET,MOUNTING.....	1
2	PAOZZ	5310014124013	24617	2436163	WASHER,FLAT 3/8.....	3
* 3	PAOZZ	5310006379541	80205	MS35338-46	WASHER,LOCK 3/8.....	3
4	PAOZZ	5305000680510	80204	B1821BH038C100N	SCREW,CAP,HEXAGON H 3/8-16 x 1.00..	3
5	PAOZZ	5340014885643	34623	12469474	BRACKET,MOUNTING.....	1
6	PAOZZ	5340014886179	34623	12469497	BRACKET,MOUNTING.....	1
7	PAOZZ	5306012638889	19207	12340845-2	BOLT,MACHINE M10-1.5 X 30.....	2
8	PAOZZ	5306012755448	19207	12340845-3	BOLT,MACHINE M10-1.5 X 45.....	1

END OF FIGURE

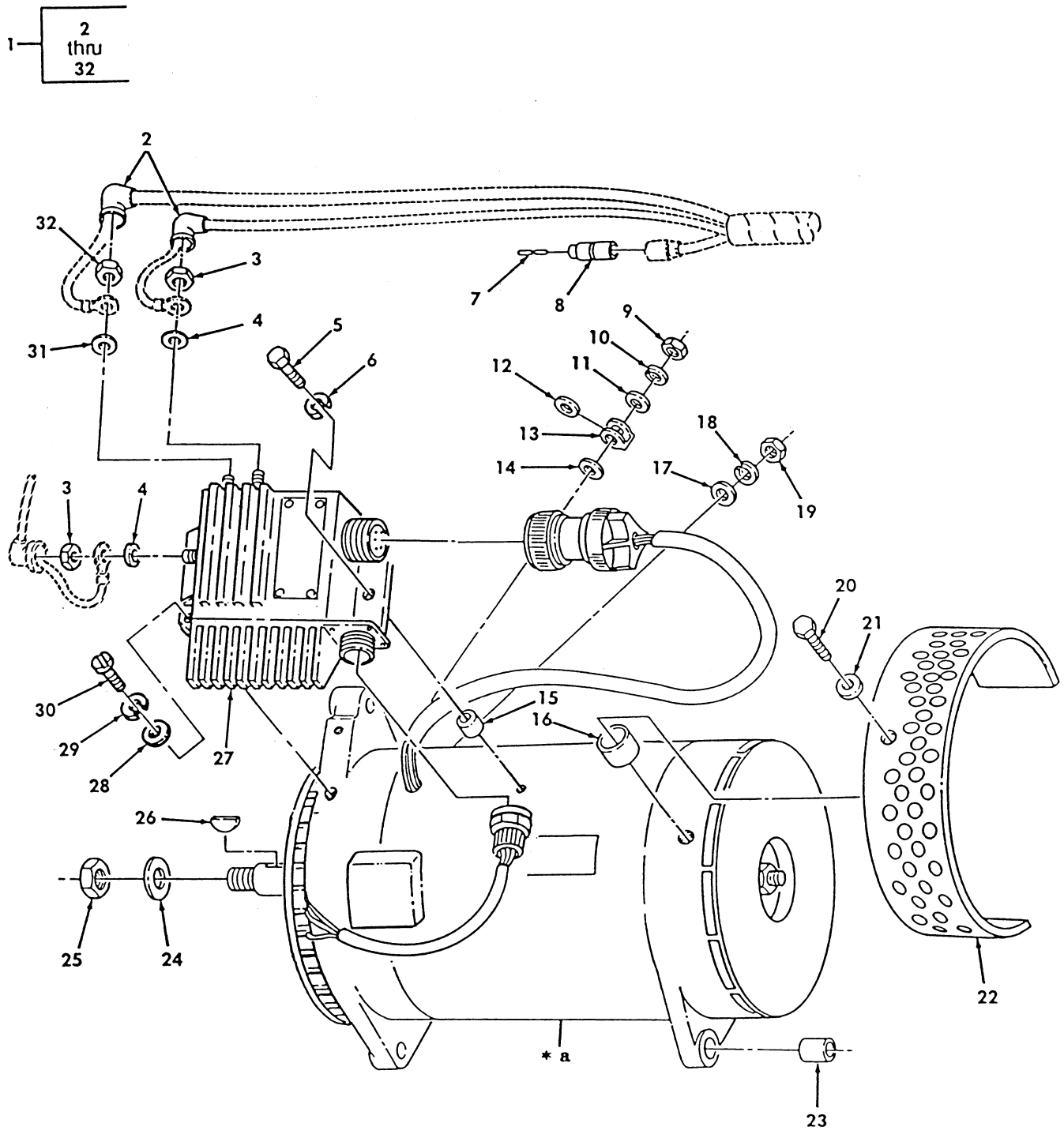

* a PART OF ITEM 1

Figure 46. 200 AMP Alternator (Niehoff) and Related Parts.

(1) ITEM NO	(2) SMR CODE	(3) NSN	(4) CAGEC	(5) PART NUMBER	(6) DESCRIPTION AND USABLE ON CODES(UOC)	(7) QTY
					GROUP 0601 GENERATOR: ALTERNATOR	
					FIG. 46 200 AMP ALTERNATOR (NIEHOFF) AND RELATED PARTS	
1	PAOFF	2920014209968	19207	12447109	GENERATOR,ENGINE AC 200 AMP.....	1
2	PAOZZ	5975013501987	76761	N9464	.BOOT,DUST AND MOIST.....	2
3	PAOZZ	5310013504257	76761	N9467	.NUT,PLAIN,CAP.....	2
4	PAOZZ	5310013508549	76761	N9465	.WASHER,FLAT.....	2
5	PAOZZ	5306013488310	76761	N9457	.BOLT,MACHINE.....	1
6	PAOZZ	5310003488393	76761	N9459	.WASHER,LOCK.....	1
7	PAOZZ	5935002140904	19207	7882907	.DUMMY CONNECTOR,PLU.....	1
8	PAOZZ	5975006605962	19207	8724494	.CABLE,NIPPLE,ELECTR.....	1
9	PAOZZ	5310013488314	76761	N9453	.NUT,PLAIN HEXAGON.....	1
10	PAOZZ	5310013488392	76761	N9461	.WASHER,LOCK.....	1
11	PAOZZ	5310002321361	76761	N9331	.WASHER,FLAT.....	1
12	PAOZZ	5970013505646	76761	N9420	.INSULATOR,WASHER.....	1
13	PAOZZ	5920013480303	76761	N9414	.FUSE LINK,ELECTRICA.....	1
14	PAOZZ	5310013488392	76761	N9408	.WASHER,FLAT.....	1
15	PAOZZ	5365013486971	76761	N9460	.SPACER,SLEEVE.....	1
16	PAOZZ	3120013824194	19207	12342772	.BUSHING,SLEEVE.....	3
17	PAOZZ	5310013488385	76761	N9455	.WASHER,FLAT.....	1
18	PAOZZ	5310010460186	76761	N9015	.WASHER,LOCK.....	1
19	PAOZZ	5310013488313	76761	N9426	.NUT,PLAIN HEXAGON.....	1
20	PAOZZ	5306012234345	76761	N9077	.BOLT,SELF-LOCKING.....	3
21	PAOZZ	5310012321362	76761	N9338	.WASHER,FLAT.....	3
* 22	PFOZZ	4140013500839	76761	N7370	.FAN,GUARD ALTERNATO.....	1
23	PAOZZ	3120014136106	19207	12342711	.BUSHING,SLEEVE.....	1
24	PAOZZ	5310007720442	19207	7720442	.WASHER,FLAT.....	1
25	PAOZZ	5310004190876	96906	MS21245-L12	.NUT,SELF-LOCKING,HE 3/4-16.....	1
26	PAOZZ	5315000124553	80205	MS35756-17	.KEY,WOODRUFF #15.....	1
* 27	PAOZZ	2920014832291	76761	N3135	.REGULATOR,ENGINE GE.....	1
28	PAOZZ	5310001034169	76761	N9016	.WASHER,FLAT.....	2
29	PAOZZ	5310010324827	76761	N9018	.WASHER,SPRING TENSI.....	2
30	PAOZZ	5305004427347	80205	NAS1635-3-12P	.SCREW,MACHINE.....	2
31	PAOZZ	5310010428391	13499	500-1114-003	.WASHER,FLAT.....	1
32	PAOZZ	5310013488398	76761	N9410	.NUT,PLAIN OCTAGON.....	1

END OF FIGURE

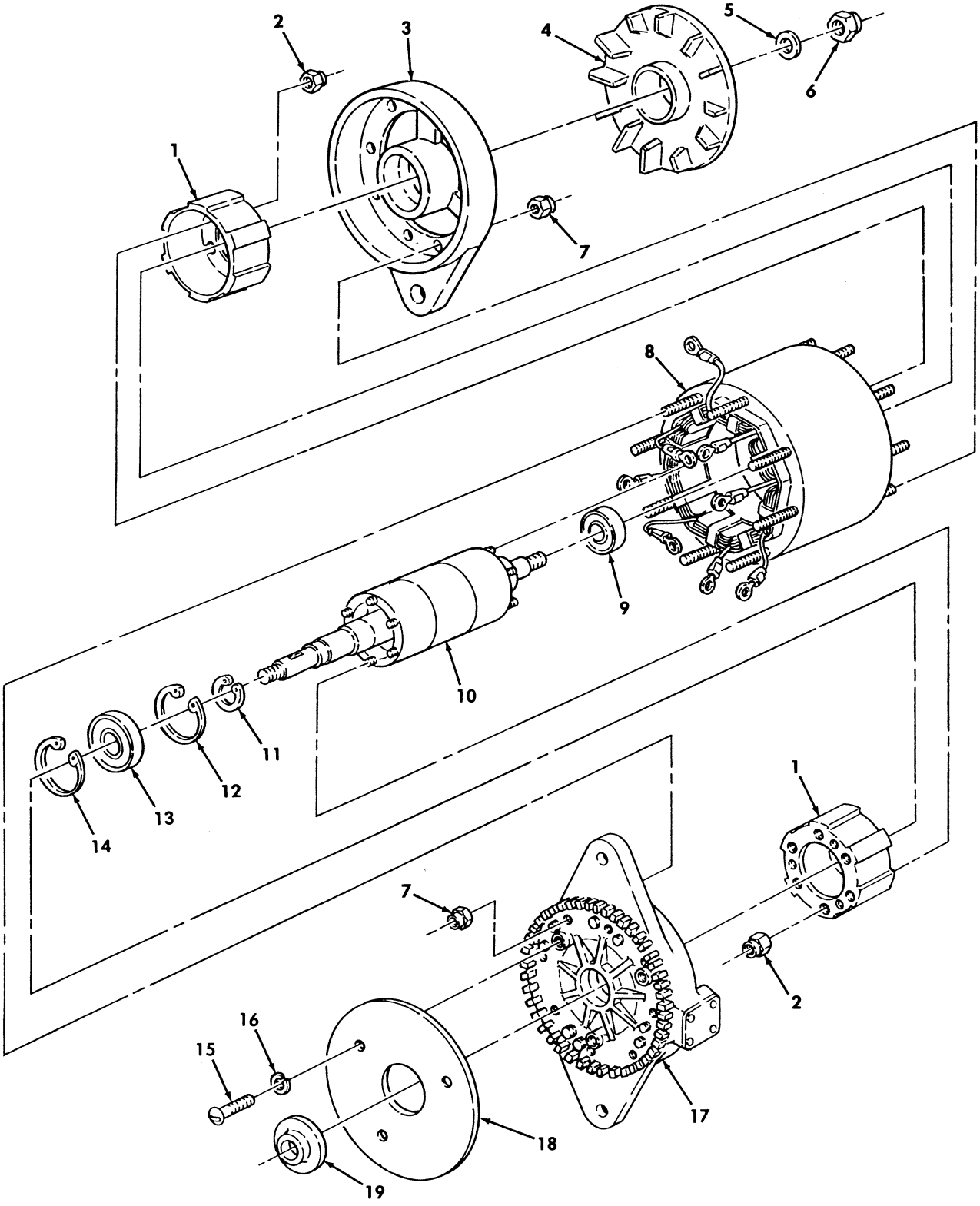

Figure 47. 200 AMP Alternator Assembly.

(1) ITEM NO	(2) SMR CODE	(3) NSN	(4) CAGEC	(5) PART NUMBER	(6) DESCRIPTION AND USABLE ON CODES(UOC)	(7) QTY
					GROUP 0601 GENERATOR: ALTERNATOR	
					FIG. 47 200 AMP ALTERNATOR ASSEMBLY	
1	PAFZZ	2920013635173	76761	N7312	ROTOR ASSEMBLY.....	2
2	PAFZZ	5310012250701	76761	N9098	NUT.....	9
3	XAFZZ		76761	N9452	HOUSING ASSEMBLY.....	1
4	PFFZZ	6115013495320	76761	N7309	IMPELLER,FAN,CENTRI.....	1
5	PAFZZ	5310010506565	76761	N9063	WASHER,FLAT.....	1
6	PAFZZ	5310000443340	19207	8712289	NUT,SELF-LOCKING,HE.....	1
* 7	PAFZZ	5310011651312	76761	N9099	NUT,SELF-LOCKING,EX.....	18
8	XAFZZ		76761	N7346	SHELL AND STATOR.....	1
9	PAFZZ	3110013484867	76761	N9385	BEARING,BALL,ANNULA.....	1
10	XAFZZ		76761	N7347	CORE AND SHAFT.....	1
11	PAFZZ	5325011367662	76761	N9260	RING,RETAINING.....	1
12	PAFZZ	5325010324222	76761	N9008	RING,RETAINING.....	1
13	PAFZZ	3110010374661	76761	N9010	BEARING,BALL,ANNULA.....	1
14	PAFZZ	5325010342757	76761	N9009	RING,RETAINING.....	1
15	PAFZZ	5305010324165	76761	N9005	SCREW,MACHINE.....	3
16	PAFZZ	5310011364888	76761	N9265	WASHER,LOCK.....	3
17	XAFZZ		76761	N7348	HOUSING ASSEMBLY FRONT.....	1
18	PFFZZ	5999013480302	76761	N9318	PLATE,ELECTRICAL SH.....	1
19	PAFZZ	3120013483364	76761	N9417	BUSHING,SLEEVE.....	1

END OF FIGURE

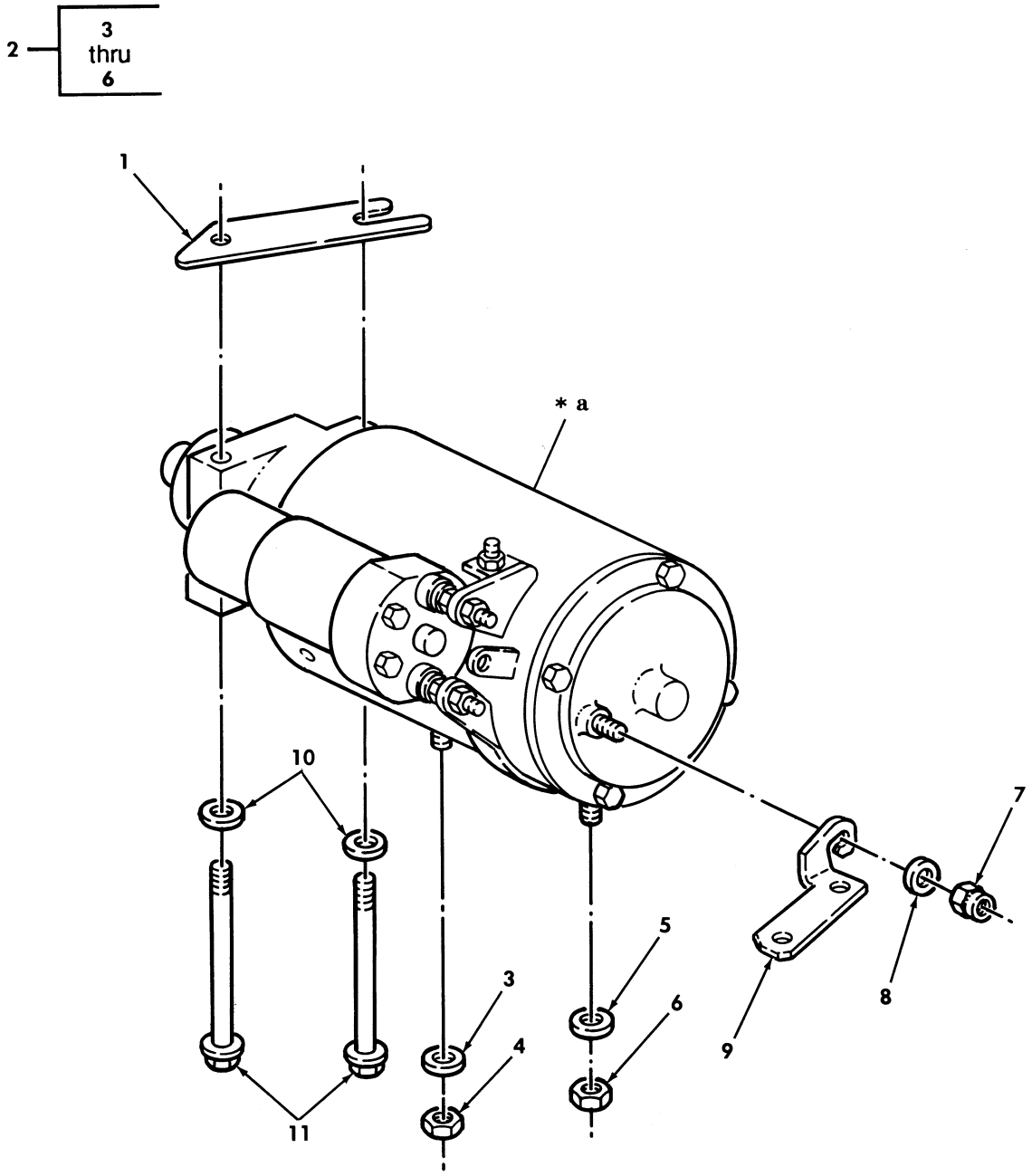

* a PART OF ITEM 2

Figure 48. Starter Motor.

(1) ITEM NO	(2) SMR CODE	(3) NSN	(4) CAGEC	(5) PART NUMBER	(6) DESCRIPTION AND USABLE ON CODES(UOC)	(7) QTY
					GROUP 0601 GENERATOR: ALTERNATOR	
					FIG. 48 STARTER MOTOR	
1	PFOZZ	5365012104903	34623	5593694	SPACER,PLATE .080..... V	
2	PAOFF	2920011687891	68505	MFY-6701UT	STARTER,ENGINE,ELEC 24 VOLT.....	1
3	PAOZZ	5310006379541	96906	MS35338-46	.WASHER,LOCK 3/8.....	1
4	PAOZZ	5310007320558	96906	MS51967-8	.NUT,PLAIN,HEXAGON 3/8-16.....	1
5	PAOZZ	5310012167390	96906	MS51415-9	.WASHER,LOCK 1/2.....	1
6	PAOZZ	5310008348732	96906	MS35691-33	.NUT,PLAIN,HEXAGON 1/2-13.....	1
7	PAOZZ	5310003555645	82465	31WLF3816	NUT,PLAIN,ASSEMBLED 3/8-16.....	1
8	PAOZZ	5310014124013	24617	2436163	WASHER,FLAT 3/8.....	1
* 9	PAOZZ	5340014575734	34623	ECEX4939B1	BRACKET,ANGLE.....	1
10	PAOZZ	5310012866077	34623	5598627	WASHER,FLAT.....	2
11	PAOZZ	5305012854923	34623	12339413	SCREW,CAP,HEXAGON H.....	2

END OF FIGURE

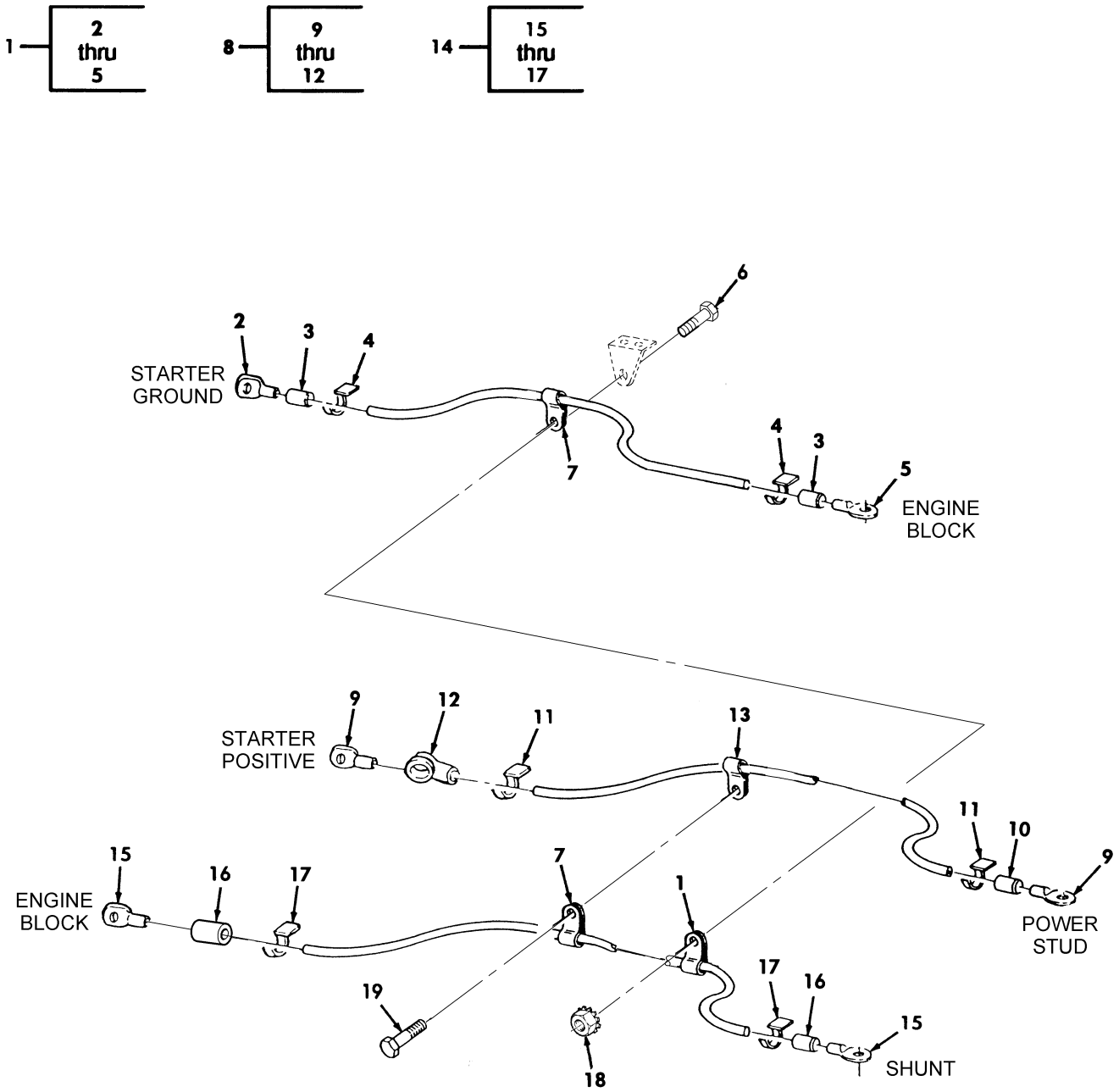

Figure 49. Starter Motor Cable Assemblies and Mounting Hardware.

(1) ITEM NO	(2) SMR CODE	(3) NSN	(4) CAGEC	(5) PART NUMBER	(6) DESCRIPTION AND USABLE ON CODES(UOC)	(7) QTY
					GROUP 0603 STARTING MOTOR	
					FIG. 49 STARTER MOTOR CABLE ASSEMBLIES AND MOUNTING HARDWARE	
* 1	MOOOO		34623	EX4150-1	CABLE,GROUND,STAR MAKE FROM WIRE,P/N M13486/1-14,27.50 INCHES LONG.....	1
* 2	PAOZZ	5940001155006	96906	MS25036-133	.TERMINAL,LUG.....	1
3	PAOZZ	5970011749449	19207	7056640	.INSULATION SLEEVING.....	2
4	PAOZZ	9905008933570	81349	M43436/1-3	.BAND,MARKER RED.....	3
5	PAOZZ	5940001152685	96906	MS20659-152	.TERMINAL,LUG.....	1
6	PAOZZ	5305000680508	80204	B1821BH025C075N	SCREW,CAP,HEXAGON H.....	1
7	PAOZZ	5340008091494	96906	MS21333-105	CLAMP,LOOP.....	3
* 8	MOOOO		34623	EX5140-6	CABLE,STARTER,POS MAKE FROM WIRE,P/N M13486/1-14,26.0 INCHES LONG.....	1
9	PAOZZ	5940007355520	56501	TG33	.TERMINAL,LUG.....	2
* 10	PAOZZ	5970008276566	06090	CRN1RED	.INSULATION SLEEVING.....	1
11	PAOZZ	9905008933570	81349	M43436/1-3	.BAND,MARKER.....	3
12	PAOZZ	5975012089618	34623	5582481	.CABLE NIPPLE,ELECTR.....	1
13	PAOZZ	5340009848541	96906	MS21333-106	CLAMP,LOOP.....	1
* 14	MOOOO		34623	EX4151-2	CABLE,ALT,POS 24V MAKE FROM WIRE, M13486/1-14,55.0 INCHES LONG.....	1
15	PAOZZ	5940007355520	56501	TG33	.TERMINAL,LUG.....	2
* 16	PAOZZ	5970008276566	06090	CRN1RED	.INSULATION SLEEVING.....	2
17	PAOZZ	9905008933570	81349	M43436/1-3	.BAND,MARKER.....	3
18	PAOZZ	5310011520598	24617	271172	NUT,SELF-LOCKING.....	1
* 19	PAOZZ	5305010396633	96906	MS51869-23	SCREW,TAPPING 1/4-20 X 3/8.....	1

END OF FIGURE

UNIT, DIRECT SUPPORT, AND GENERAL SUPPORT MAINTENANCE
REPAIR PARTS AND SPECIAL TOOLS LIST

TRUCK, UTILITY: S250 SHELTER CARRIER, 4X4, M1113 (2320-01-412-0143),
TRUCK, UTILITY: UP-ARMORED CARRIER, 4X4, M1114 (2320-01-413-3739)

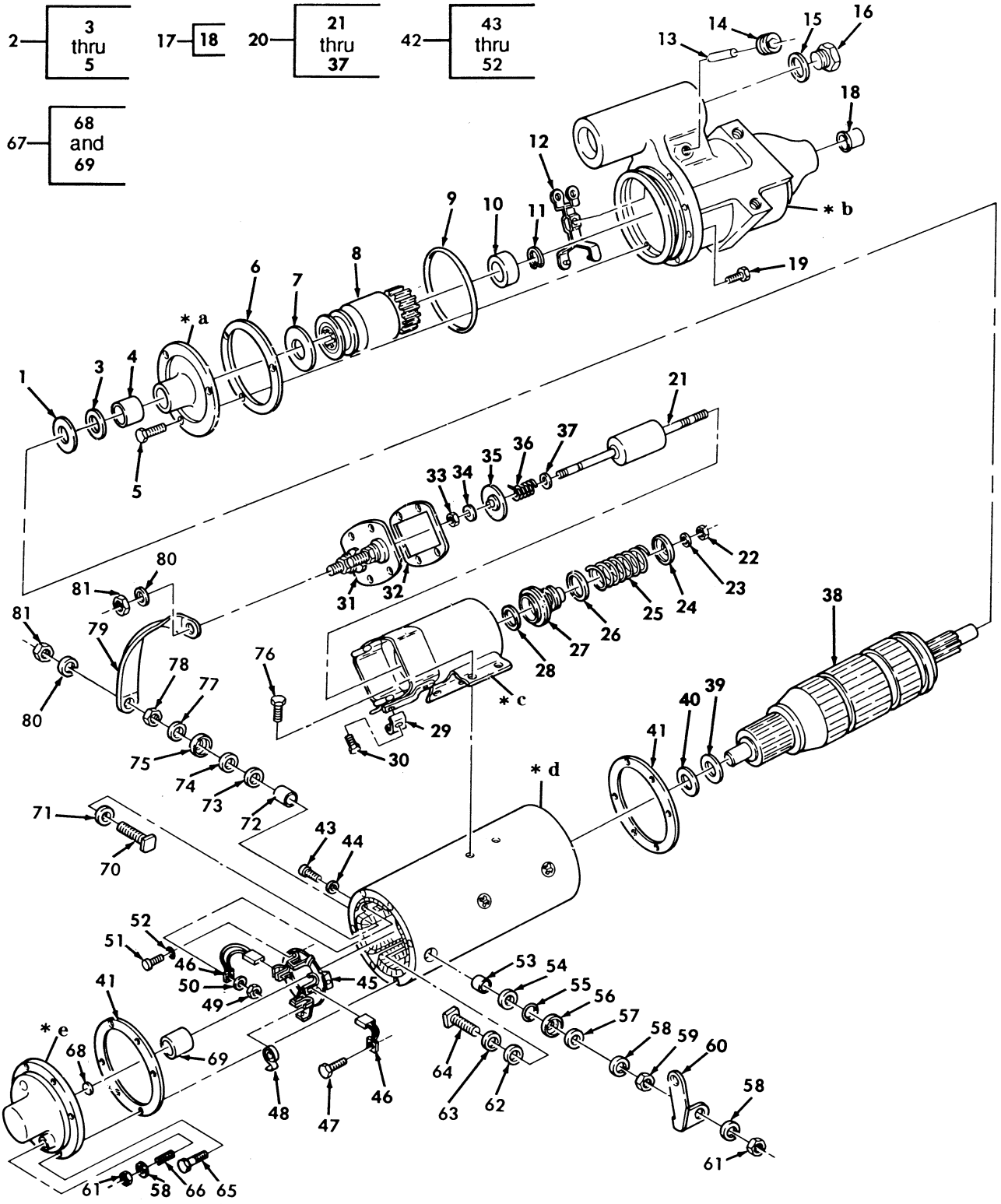

* a PART OF ITEM 2
* b PART OF ITEM 17
* c PART OF ITEM 20
* d PART OF ITEM 42
* e PART OF ITEM 67

Figure 50. Starter Motor Assembly.

(1) ITEM NO	(2) SMR CODE	(3) NSN	(4) CAGEC	(5) PART NUMBER	(6) DESCRIPTION AND USABLE ON CODES(UOC)	(7) QTY
					GROUP 0603 STARTING MOTOR	
					FIG. 50 STARTER MOTOR ASSEMBLY	
1	PAFZZ	5310008822237	19728	ML-129	WASHER,FLAT 5/16 THICK PART OF KIT P/N 90-2840.....	1
* 2	PAFZZ	2990012055981	24975	MFY-2130	PLATE ASSEMBLY,STAR.....	1
3	PAFZZ	5330012097669	68505	XA-1642	.SEAL.....	1
4	PAFZZ	3120004256467	96906	MS17795-128	.BEARING,SLEEVE.....	1
5	KFFZZ		19728	13X-5549	.SCREW,FILL HEAD PART OF KIT P/N 90-2838.....	3
6	KFFZZ		19728	MFY-25	GASKET,INTERMEDIATE PART OF KIT P/N 36-630.....	1
7	KFFZZ		19728	MFY-133	SPACER 0.108 THICK PART OF KIT P/N 90-2840.....	1
* 8	PAFZZ	2920011871310	24975	DRA-3002D	DRIVE,ENGINE,ELECTR.....	1
* 9	PAFZZ	5331001373450	0U2B4	CD5330-02527-1	O-RING 4-7/16.....	1
10	KFFZZ		19728	MFY-53	PINION STOP STARTER PART OF KIT P/N 90-2841.....	1
11	KFFZZ		19728	MCS-47A	SNAP RING STARTER PART OF KIT P/N 90-2841.....	1
* 12	PAFZZ	3010010686996	24975	MEU-2042B	SHIFTER FORK,NONVEH.....	1
13	KFFZZ		19728	MES-117A	PIN,STRAIGHT PART OF KIT P/N 90-2206.....	2
14	KFFZZ		19728	20X-4222	PLUG,YOKE ADJUSTING PART OF KIT P/N 90-2206.....	1
15	KFFZZ		19728	MFY-63	GASKET PLUG PART OF KIT P/N 90-2206	1
16	KFFZZ		19728	MES-61	PLUG,YOKE ADJUSTING PART OF KIT P/N 90-2206.....	1
* 17	PAFFF	2920012909245	24975	M014102573S	HOUSING,PINION,STAR.....	1
18	PAFZZ	3120004501905	24975	MEL50	.BEARING,SLEEVE.....	1
19	KFFZZ		19728	8X-4678	SCREW HEX HD PART OF KIT P/N 90-2836.....	7
20	PAFFF	5945012101299	68505	SAT4108UT	SOLENOID,ELECTRICAL.....	1
* 21	PAFZZ	2920011841054	24975	SAV-1008A	.CORE ASSEMBLY,SOLEN.....	1
22	KFFZZ		19728	8X-1681	.NUT PART OF KIT P/N 90-2206.....	1
23	KFFZZ		19728	6X-4336	.SNAP RING CORE END PART OF KIT P/N 90-816.....	1
24	KFFZZ		19728	SAT-48	.RETAINER,CORE PART OF KIT P/N 90-816.....	1
25	KFFZZ		19728	SAT-52	.SPRING,CORE PART OF KIT P/N 90-816	1
26	KFFZZ		19728	SAT-47	.RETAINER,CORE PART OF KIT P/N 90-816.....	1
27	PAFZZ	2530010690906	55883	IPD8S5128	.BOOT PART OF KIT P/N 90-816.....	1
28	KFFZZ		19728	SAT-46	.WASHER,SOLENOID PART OF KIT P/N 90-816.....	1
29	PAFZZ	5310012507844	24975	66X-3331	.WASHER,LOCK.....	1
* 30	PAFZZ	5305009906444	80205	MS35207-261	.SCREW,MACHINE #10-32 X .375.....	1
31	KFFZZ		19728	SAT-1004F	.COVER AND CONTACT PART OF KIT P/N SAT-1004FS.....	1
* 32	KFFZZ		19728	SAT-32	.GASKET PART OF KIT P/N SAT-1004FS PART OF KIT P/N 37-123A.....	1
33	KFFZZ		19728	X-3508	.NUT,HEXAGON ELASTIC PART OF KIT P/N 90-2225.....	1

(1) ITEM NO	(2) SMR CODE	(3) NSN	(4) CAGEC	(5) PART NUMBER	(6) DESCRIPTION AND USABLE ON CODES(UOC)	(7) QTY
* 34	KFFZZ		19728	8X-349	.WASHER,PLAIN #10 PART OF KIT P/N 90-2225	1
35	KFFZZ		19728	SAT-1014B	.CONTACT ASSEMBLY PART OF KIT P/N 90-2225	1
36	KFFZZ		19728	SS-88A	.SPRING PART OF KIT P/N 90-2225	1
37	KFFZZ		19728	SAT-40	.WASHER STEEL #10 PART OF KIT P/N 90-2225	1
* 38	PAFZZ	2920015052007	24975	MBD-2566	ARMATURE,MOTOR	1
39	KFFZZ		19728	GK-174A	THRUST WASHER 0.0659 THICK PART OF KIT P/N 90-2840	1
40	KFFZZ		19728	ML-128A	THRUST WASHER .15 THICK PART OF KIT P/N 90-2840	8
* 41	PAFZZ	5330001380251	24975	MES-95S	GASKET	2
42	XAFZZ		19728	MFY-2101SS	FRAME AND FIELD ASSY	1
43	PAFZZ	5305009897434	96906	MS35207-263	.SCREW,MACHINE #10-32 X .500	2
44	PAFZZ	5310012147784	68505	MZ-414S	.WASHER,FLAT	2
* 45	PAFZZ	5977013246323	24975	MFY-1064B	.HOLDER,ELECTRICAL C	1
46	KFFZZ		19728	MFJ-13A	.BRUSH,STARTER MOTOR PART OF KIT P/N MFJ-2012BS	4
* 47	PAFZZ	5305009936444	80205	MS35207-261	.SCREW,MACHINE #10-32 X .375	2
48	KFFZZ		19728	MFY-19	.SPRING,BRUSH PART OF KIT P/N MFY-19S	4
* 49	PAFZZ	5310009349751	80205	MS35650-302	.NUT,PLAIN,HEXAGON #10-32	2
50	PAFZZ	5310012144955	68505	92-2923	.WASHER,LOCK #10	
51	PAFZZ	5305008893002	96906	MS35206-242	.SCREW,MACHINE #8-32 X .375	3
52	KFFZZ		19728	XA-744AP	.SEAL,O-RING STARTER PART OF KIT P/N 8S4680	3
53	KFFZZ		19728	MAW-37	BUSHING,INSULATING PART OF KIT P/N 90-2837	1
54	KFFZZ		19728	MBD-444	WASHER,NEOPRENE PART OF KIT P/N 90-2837	1
55	KFFZZ		19728	MBD-438	WASHER,INSULATING PART OF KIT P/N 90-2837	1
56	KFFZZ		19728	MBD-442	WASHER,CUP,STARTER PART OF KIT P/N 90-2837	1
57	KFFZZ		19728	MZ-294	WASHER,PLAIN PART OF KIT P/N 90-2837	1
* 58	PFFZZ	5310000432646	19728	12X-201	WASHER,LOCK PART OF KIT P/N 90-2837	4
59	KFFZZ		19728	8X-179	NUT,HEXAGON 3/8-16 PART OF KIT P/N 90-2837	1
60	PFFZZ	5342012115327	34623	5741120	BRACKET,STARTER MOT	1
61	KFFZZ		19728	8X-830	NUT,HEXAGON 3/8-16 PART OF KIT P/N 90-2837	4
62	KFFZZ		19728	X-3925SC	WASHER,INSULATING PART OF KIT P/N 90-2837	1
63	KFFZZ		19728	MBD-439	WASHER,PLAIN 3/8 PART OF KIT P/N 90-2837	1
64	KFFZZ		19728	MBD-233B	STUD,TERMINAL PART OF KIT P/N 90-2837	6
65	KFFZZ		19728	19X-4632	SCREW,HEX HD #10-32 X .750 PART OF KIT P/N 90-2836	6
66	KFFZZ		19728	MFY-21	STUD,TERMINAL PART OF KIT P/N 90-2837	1
67	PAFFF	2920012124976	68505	MFY1102S	COMMUTATOR	1

(1) ITEM NO	(2) SMR CODE	(3) NSN	(4) CAGEC	(5) PART NUMBER	(6) DESCRIPTION AND USABLE ON CODES(UOC)	(7) QTY
68	KFFZZ		19728	MAD-110A	.FELT OIL RETAINER PART OF KIT P/N 90-2838.....	1
69	KFFZZ		19728	MFY-117	.BEARING ABS.BRONZE PART OF KIT P/N 90-2838.....	1
70	KFFZZ		19728	MFJ-28A	STUD,TERMINAL PART OF KIT P/N 90-2837.....	1
71	KFFZZ		19728	MES-71A	WASHER,INSULATING PART OF KIT P/N 90-2837.....	1
72	KFFZZ		19728	MES-72	BUSHING,INSULATING PART OF KIT P/N 90-2837.....	1
73	KFFZZ		19728	MES-94	WASHER,NEOPRENE PART OF KIT P/N 90-2837.....	2
74	KFFZZ		19728	MES-93	WASHER,INSULATING PART OF KIT P/N 90-2837.....	1
75	KFFZZ		19728	MES-91	WASHER,CUP,STARTER PART OF KIT P/N 90-2837.....	1
76	KFFZZ		19728	37X-4914	SCREW,HEX HE 1/4-20 X .375 PART OF KIT P/N 90-2836.....	4
77	KFFZZ		19728	MES-78A	WASHER,PLAIN PART OF KIT P/N 90-2837.....	1
78	KFFZZ		19728	19X-3437	NUT,HEXAGON 1/2-13 PART OF KIT P/N 90-2837.....	1
* 79	PFFZZ	2920012114935	24975	MFY-109	BRACKET,SOLENOID.....	1
80	KFFZZ		19728	12X-198	WASHER,LOCK PART OF KIT P/N 90-2837	2
81	KFFZZ		19728	8X-3439	NUT,HEXAGON 1/2-13 PART OF KIT P/N 90-2837.....	3

END OF FIGURE

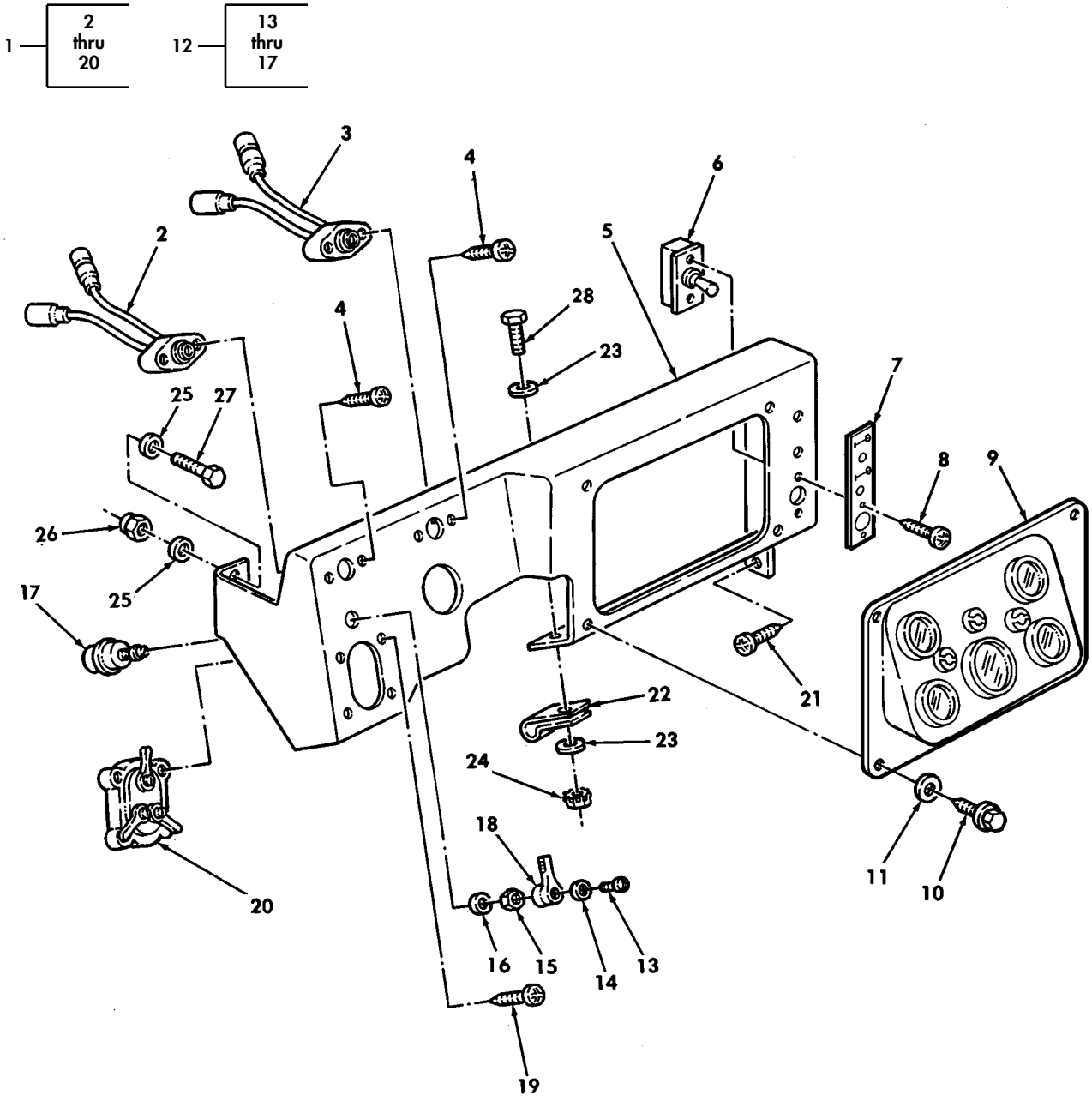

Figure 51. Instrument Panel Assembly and Mounting Hardware.

(1) ITEM NO	(2) SMR CODE	(3) NSN	(4) CAGEC	(5) PART NUMBER	(6) DESCRIPTION AND USABLE ON CODES(UOC)	(7) QTY
					GROUP 0607 INSTRUMENT OR ENGINE CONTROL PANEL	
					FIG. 51 INSTRUMENT PANEL ASSEMBLY AND MOUNTING HARDWARE	
* 1	PFOOO	2510015100981	19207	12447005	PANEL,VEHICULAR OPE..... UOC:XAA,XBB	1
* 2	PAOZZ	5980011868319	34623	5583395	.LIGHT EMITTING DIOD AMBER..... UOC:XAA,XBB	1
* 3	PAOZZ	5980011870791	19207	12356703-1	.LIGHT EMITTING DIOD BRAKE WARNING, RED..... UOC:XAA,XBB	1
* 4	PAOZZ	5305011389540	96906	MS51863-33	.SCREW,TAPPING #8-32 X 3/8..... UOC:XAA,XBB	4
* 5	XAOZZ		19207	12340840	.PANEL,INSTRUMENT..... UOC:XAA,XBB	1
* 6	PAOZZ	5930002266429	96906	MS39061-4	.SWITCH,TOGGLE..... UOC:XAA,XBB	1
* 7	PAOZZ	7690014766510	19207	12447003	.MARKER,IDENTIFICATION..... UOC:XAA,XBB	1
* 8	PFOZZ	5305012645864	7X677	186965	.SCREW,ASSEMBLED WAS #10-32 X 3/4.. UOC:XAA,XBB	2
* 9	PFOZZ	2540011856117	19207	12338466	.INSTRUMENT PANEL CA..... UOC:XAA,XBB	1
* 10	PAOZZ	5305011878757	7X677	274707	.SCREW,MACHINE #10-24 X 1/2..... UOC:XAA,XBB	4
* 11	PAOZZ	5310008098546	96906	MS27183-8	.WASHER,FLAT #10..... UOC:XAA,XBB	4
* 12	PAOZZ	5930001345036	19207	11614131	.SWITCH,ROTARY..... UOC:XAA,XBB	1
* 13	PAOZZ	5305006143423	96906	MS35265-43	..SCREW,MACHINE #8-32 X 3/8..... UOC:XAA,XBB	1
* 14	PAOZZ	5310000453299	96906	MS35338-42	..WASHER,LOCK #8..... UOC:XAA,XBB	1
* 15	PAOZZ	5310008326852	19207	5381233	..NUT,PLAIN HEXAGON 1/2-28..... UOC:XAA,XBB	1
* 16	PAOZZ	5310001941483	96906	MS35333-44	..WASHER,LOCK 1/2..... UOC:XAA,XBB	1
* 17	XAOZZ		19207	1114131-1	..SWITCH..... UOC:XAA,XBB	1
* 18	PAOZZ	5930001305349	19207	5381088	.HANDLE,SWITCH..... UOC:XAA,XBB	1
* 19	PAOZZ	5305009953440	80205	MS35207-270	.SCREW,MACHINE #10-32 X 1.75..... UOC:XAA,XBB	4
* 20	PAOZZ	5930003078856	96906	MS51113-1	.SWITCH ASSEMBLY..... UOC:XAA,XBB	1
* 21	PAOZZ	5305012506583	34623	5592878	SCREW,TAPPING #10-24 X 1/2..... UOC:XAA,XBB	1
* 22	PAOZZ	5340008091492	81348	CMDX2-3PT573036	CLAMP,LOOP..... UOC:XAA,XBB	1
* 23	PAOZZ	5310012531618	96906	MS51412-18	WASHER,FLAT #10..... UOC:XAA,XBB	2

(1) ITEM NO	(2) SMR CODE	(3) NSN	(4) CAGEC	(5) PART NUMBER	(6) DESCRIPTION AND USABLE ON CODES(UOC)	(7) QTY
* 24	PAOZZ	5310006965172	24617	271166	NUT,PLAIN ASSEMBLED #10-24..... UOC:XAA,XBB	1
* 25	PAOZZ	5310011023270	24617	2436161	WASHER,FLAT 1/4..... UOC:XAA,XBB	4
* 26	PAOZZ	5310000614650	96906	M45913/3-4CG8C	NUT,SELF-LOCKING,HE 1/4-20..... UOC:XAA,XBB	3
* 27	PAOZZ	5305000687837	80204	B1821BH025C063N	SCREW,CAP HEXAGON H 1/4-20 X 5/8... UOC:XAA,XBB	2
* 28	PAOZZ	5305010062053	96906	MS51849-75	SCREW,MACHINE #10-24 X 5/8..... UOC:XAA,XBB	1

END OF FIGURE

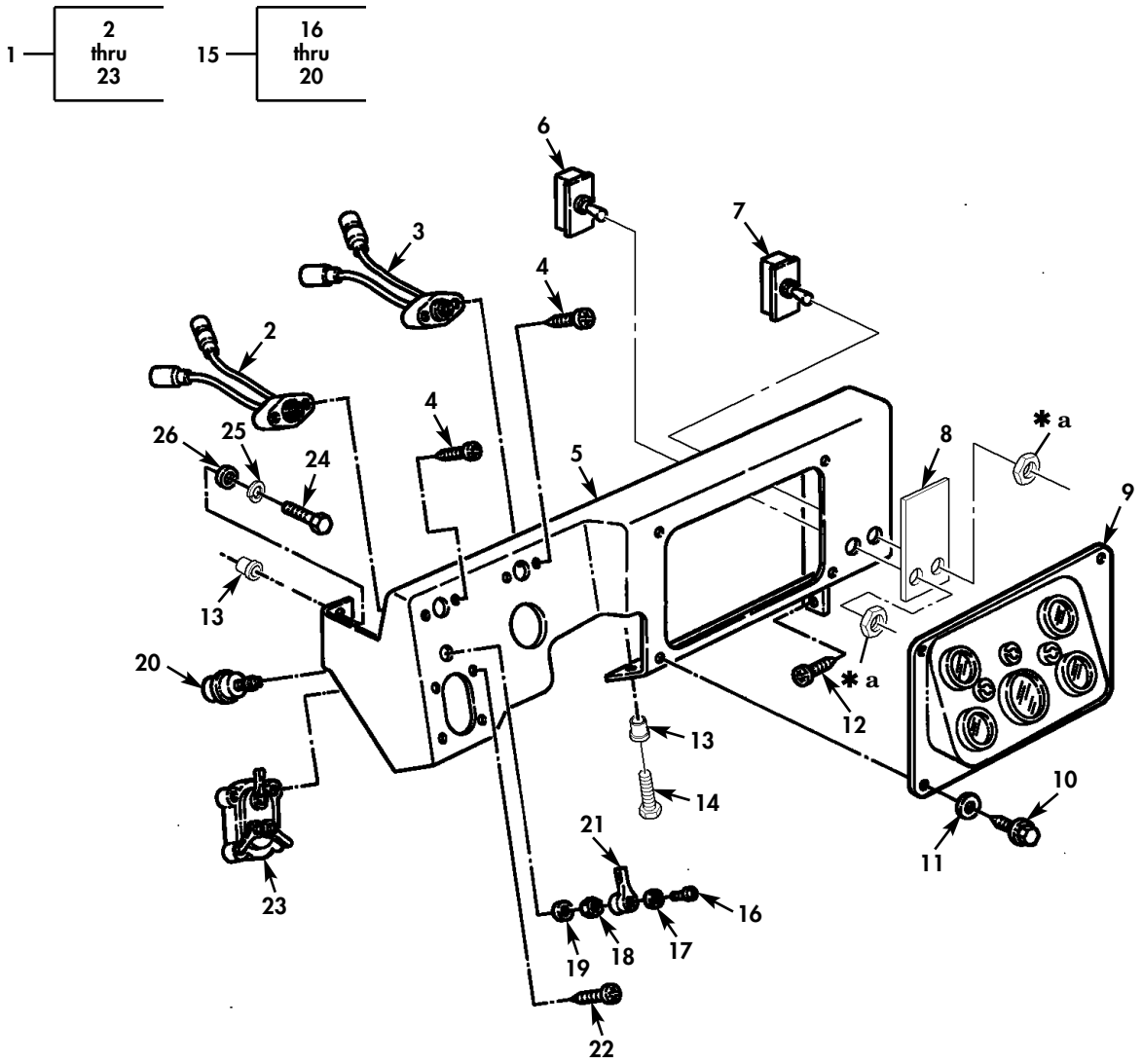

✱**a** PART OF ITEM 7

Figure 51A. Instrument Panel Assembly and Mounting Hardware.

(1) ITEM NO	(2) SMR CODE	(3) NSN	(4) CAGEC	(5) PART NUMBER	(6) DESCRIPTION AND USABLE ON CODES(UOC)	(7) QTY
					GROUP 0607 INSTRUMENT OR ENGINE CONTROL PANEL	
					FIG. 51A INSTRUMENT PANEL ASSEMBLY AND MOUNTING HARDWARE	
* 1	PFOOO	2510015100981	19207	12447005	PANEL,VEHICLE OPE..... UOC:TTA,TTT,TT1,UUU,UU1,UU2	1
* 2	PAOZZ	5980011868319	34623	5583395	.LIGHT EMMITING DIODE AMBER..... UOC:TTA,TTT,TT1,UUU,UU1,UU2	1
* 3	PAOZZ	5980011870791	19207	12356703-1	.LIGHT EMMITING DIODE BRAKE WARNING RED..... UOC:TTA,TTT,TT1,UUU,UU1,UU2	1
* 4	PAOZZ	5305011389540	96906	MS51863-33	.SCREW,TAPPING #8-32 X 3/4..... UOC:TTA,TTT,TT1,UUU,UU1,UU2	4
* 5	XAOZZ		19207	12340840	.PANEL,INSTRUMENT..... UOC:TTA,TTT,TT1,UUU,UU1,UU2	1
* 6	PAOZZ	5930015624762	96139	19WP51-2AC	.SWITCH,TOGGLE FAN CONTROL..... UOC:TTA,TTT,TT1,UUU,UU1,UU2	1
* 7	PAOZZ	5930015204919	34623	6005718	.SWITCH,TOGGLE A/C ON-OFF..... UOC:TTA,TTT,TT1,UUU,UU1,UU2	1
* 8	PFOZZ	7690014766510	19207	12447003	.MARKER,IDENTIFICATION..... UOC:TTA,TTT,TT1,UUU,UU1,UU2	1
* 9	PAOZZ	2540011856117	19207	12338466	.INSTRUMENT PANEL,CA..... UOC:TTA,TTT,TT1,UUU,UU1,UU2	1
* 10	PFOZZ	5305011878757	7X677	274707	.SCREW,MACHINE #10-24 X 1/2..... UOC:TTA,TTT,TT1,UUU,UU1,UU2	4
* 11	PAOZZ	5310008098546	96906	MS27183-8	.WASHER,FLAT #10..... UOC:TTA,TTT,TT1,UUU,UU1,UU2	4
* 12	PAOZZ	5305012135024	86403	9414722	.SCREW,TAPPING #10-24 X 1/2..... UOC:TTA,TTT,TT1,UUU,UU1,UU2	1
* 13	PAOZZ	5325014759697	78276	ALS4-1024-225	.NUT,INSERT 1/4-20..... UOC:TTA,TTT,TT1,UUU,UU1,UU2	4
* 14	PAOZZ	5305015603515	34623	191990	.SCREW..... UOC:TTA,TTT,TT1,UUU,UU1,UU2	1
* 15	PAOZZ	5930001345036	19207	11614131	.SWITCH,ROTARY..... UOC:TTA,TTT,TT1,UUU,UU1,UU2	1
* 16	PAOZZ	5305006143423	96906	MS35265-43	..SCREW,MACHINE #8-32 X 3/8..... UOC:TTA,TTT,TT1,UUU,UU1,UU2	1
* 17	PAOZZ	5310000453299	80205	MS35338-42	..WASHER,LOCK #8..... UOC:TTA,TTT,TT1,UUU,UU1,UU2	1
* 18	PAOZZ	5310008326852	19207	5381233	..NUT,PLAIN,HEXAGON 1/2-20..... UOC:TTA,TTT,TT1,UUU,UU1,UU2	1
* 19	PAOZZ	5310001941483	96906	MS35333-44	..WASHER,LOCK 1/2..... UOC:TTA,TTT,TT1,UUU,UU1,UU2	1
* 20	XAOZZ		19207	11614131-1	..SWITCH..... UOC:TTA,TTT,TT1,UUU,UU1,UU2	1
* 21	PAOZZ	5930001305349	19207	5381088	.HANDLE,SWITCH..... UOC:TTA,TTT,TT1,UUU,UU1,UU2	1
* 22	PAOZZ	5305009953440	80205	MS35207-270	.SCREW,MACHINE #10-32 X 1.75..... UOC:TTA,TTT,TT1,UUU,UU1,UU2	4
* 23	PAOZZ	5930003078856	96906	MS51113-1	.SWITCH ASSEMBLY..... UOC:TTA,TTT,TT1,UUU,UU1,UU2	1

(1) ITEM NO	(2) SMR CODE	(3) NSN	(4) CAGEC	(5) PART NUMBER	(6) DESCRIPTION AND USABLE ON CODES(UOC)	(7) QTY
* 24	PAOZZ	5305000687837	80204	B1821BH025C063N	SCREW,CAP,HEXAGON H 1/4-20 X 5/8... UOC:TTA,TTT,TT1,UUU,UU1,UU2	2
* 25	PAOZZ	5310005825965	80205	MS35338-44	WASHER,LOCK 1/4..... UOC:TTA,TTT,TT1,UUU,UU1,UU2	2
* 26	PAOZZ	5310011023270	24617	2436161	WASHER,FLAT 1/4..... UOC:TTA,TTT,TT1,UUU,UU1,UU2	4

END OF FIGURE

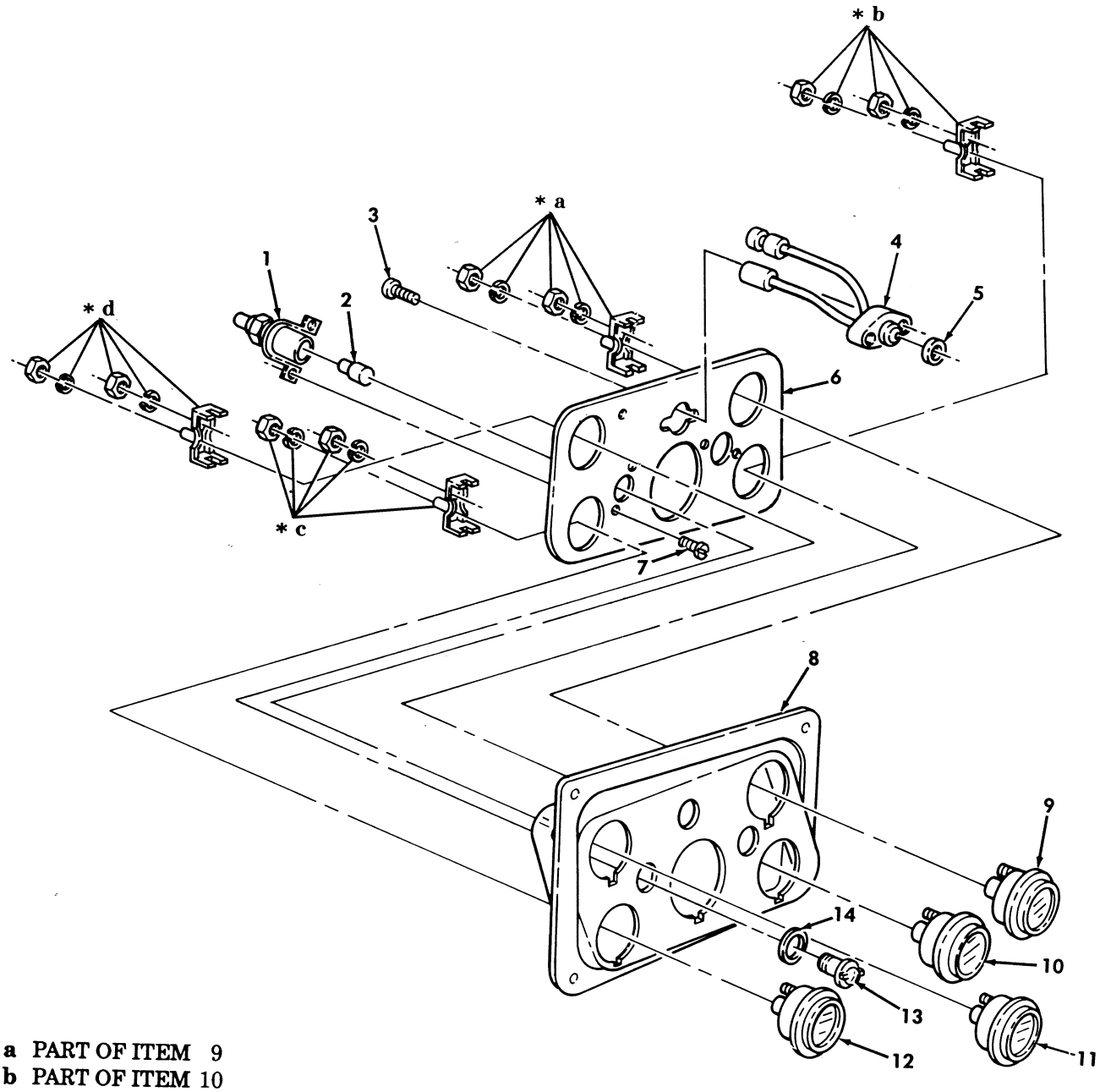

* a PART OF ITEM 9
* b PART OF ITEM 10
* c PART OF ITEM 12
* d PART OF ITEM 11

Figure 52. Instrument Cluster Assembly.

(1) ITEM NO	(2) SMR CODE	(3) NSN	(4) CAGEC	(5) PART NUMBER	(6) DESCRIPTION AND USABLE ON CODES(UOC)	(7) QTY
					GROUP 0607 INSTRUMENT OR ENGINE CONTROL PANEL	
					FIG. 52 INSTRUMENT CLUSTER ASSEMBLY	
1	PAOZZ	6210012084790	19207	12338465	LIGHT,INDICATOR.....	2
2	PAOZZ	5980014387452	19207	12460228	SEMICONDUCTOR DEVIC PART OF KIT P/N 57K3238.....	2
3	PAOZZ	5305012111439	7X677	9414224	SCREW,TAPPING.....	2
4	PAOZZ	6220012730500	19207	12356703-3	LIGHT,INDICATOR.....	1
5	PAOZZ	5330012115856	19207	12338462	GASKET.....	1
6	PFOZZ	2510012488875	19207	12338467	PANEL.VEHICULAR OPE.....	1
* 7	PAOZZ	5305009846191	80205	MS35206-243	SCREW,MACHINE #8-32 X .375.....	1
8	PFOZZ	2510013035769	34623	5585111	PANEL,VEHICULAR OPE.....	1
* 9	PAOZZ	6685011809037	81349	MS24537	INDICATOR,TEMPERATU ENGINE COOLANT TEMPRATURE,120-240 DEGREES.....	1
* 9	PAOZZ	6620015342370	09527	GG0401	GAGE,PRESSURE DIAL ENGINE COOLANT TEMPRATURE,120-280 DEGREES.....	1
* 10	PAOZZ	6625011806542	19207	12338472	METER,ARBITRARY SCA.....	1
* 11	PAOZZ	6620011811757	19207	12338471	GAGE,PRESSURE,DIAL.....	1
12	PAOZZ	6680012980498	34623	5598667	INDICATOR,LIQUID QU.....	1
13	PAOZZ	6220014294596	19207	12339203-1	LENS,LIGHT PART OF KIT P/N 57K3238..	2
14	PAOZZ	5330002976329	19207	7358626	PACKING,PREFORMED.....	2

END OF FIGURE

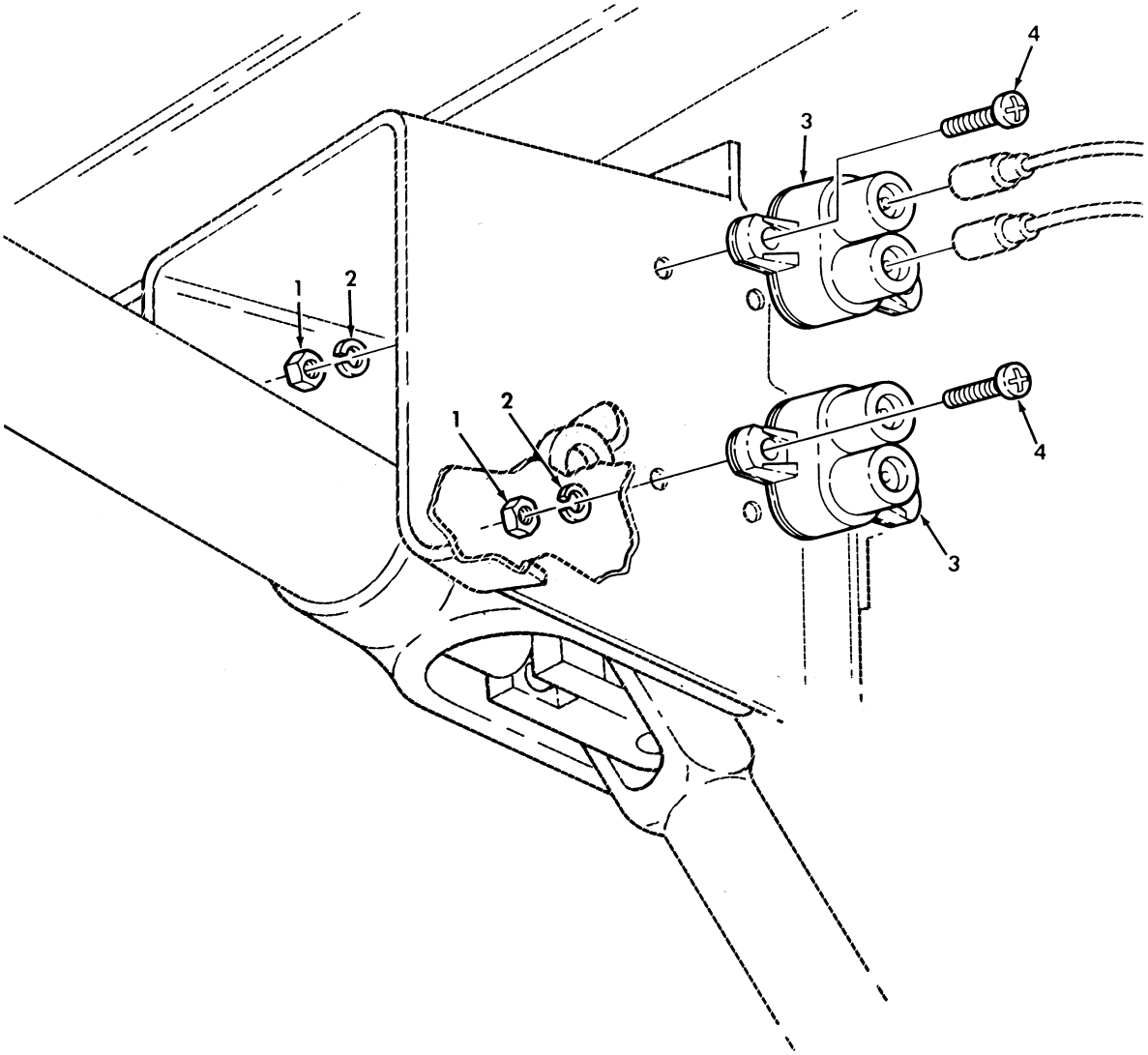

Figure 53. Circuit Breakers.

(1) ITEM NO	(2) SMR CODE	(3) NSN	(4) CAGEC	(5) PART NUMBER	(6) DESCRIPTION AND USABLE ON CODES(UOC)	(7) QTY
					GROUP 0607 MISCELLANEOUS ITEMS	
					FIG. 53 CIRCUIT BREAKERS	
1	PAOZZ	5310009349757	96906	MS354649-282	NUT,PLAIN,HEXAGON #8-32.....	4
* 2	PAOZZ	5310000453299	80205	MS35338-42	WASHER,LOCK #8.....	4
3	PAOZZ	5925014302318	58536	AA55571/01-001	CIRCUIT BREAKER 15 AMP.....	2
* 4	PAOZZ	5305009846195	80205	MS35206-247	SCREW,MACHINE #8-32 X 3/4.....	4

END OF FIGURE

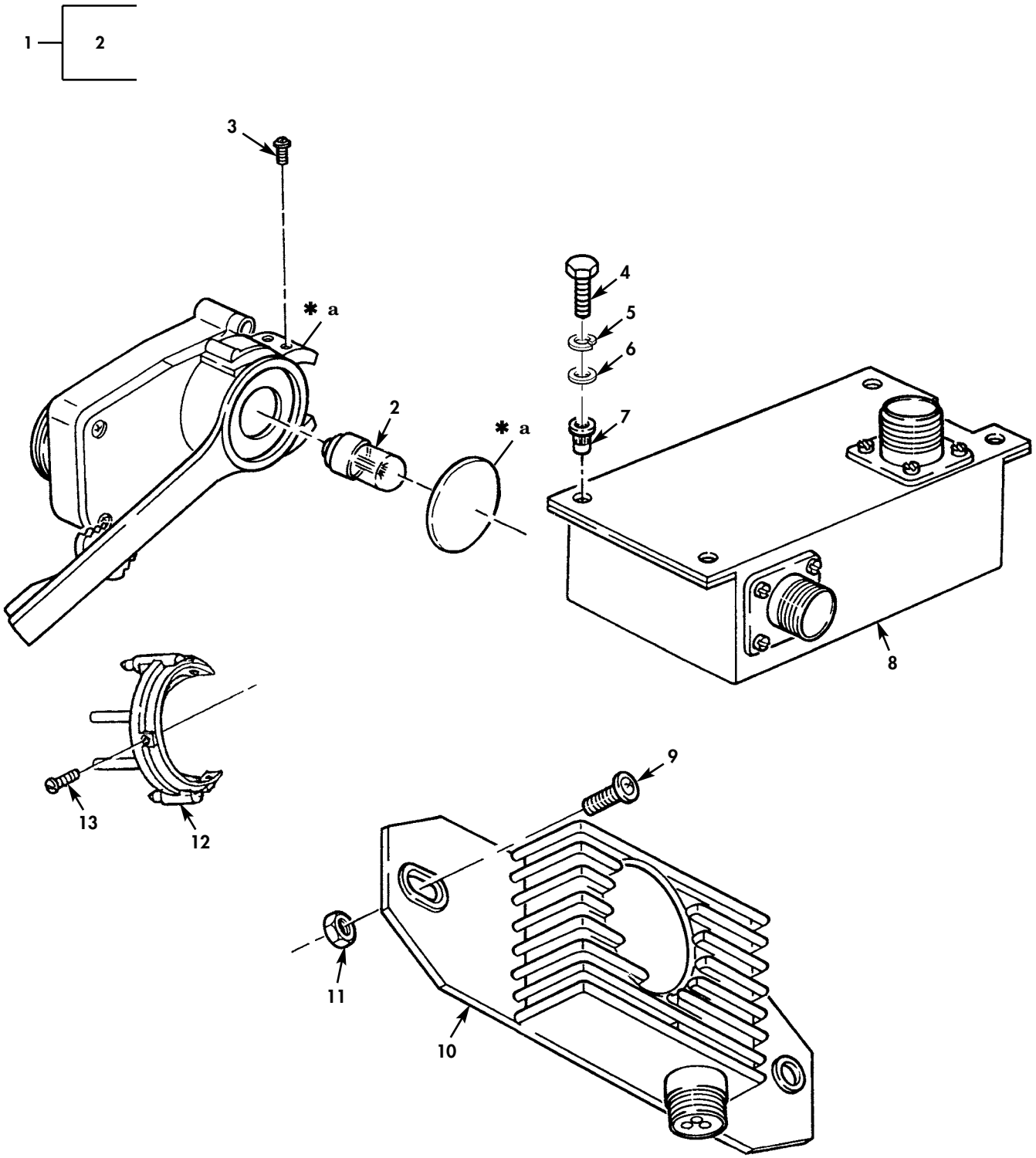

✱ **a** PART OF ITEM 1

Figure 54. Directional Control Unit, Protective Control Box, and Directional Flasher.

(1) ITEM NO	(2) SMR CODE	(3) NSN	(4) CAGEC	(5) PART NUMBER	(6) DESCRIPTION AND USABLE ON CODES(UOC)	(7) QTY
					GROUP 0608 MISCELLANIOUS ITEMS	
					FIG. 54 DIRECTIONAL CONTROL UNIT, PROTECTIVE CONTROL BOX,AND DIRECTIONAL FLASHER	
1	PAOZZ	6220014087785	19207	12447083	CONTROL,DIRECTIONAL PART OF KIT P/N 57K3222.....	1
2	PAOZZ	6240001558714	96906	MS25231-313	.LAMP,INCANDESCENT.....	1
* 3	PAOZZ	5305012116049	5L381	531	SCREW,TAPPING #6-32 X 3/8 PART OF KIT P/N 57K3222.....	4
* 4	PAOZZ	5305000712509	80204	B1821BH025C150N	SCREW,CAP,HEXAGON H 1/4-20 X 1.50.	4
* 5	PAOZZ	5310005825965	80205	MS35338-44	WASHER,LOCK 1/4.....	1
* 6	PAOZZ	5310008094058	96906	MS27183-10	WASHER,FLAT 1/4.....	4
* 7	PAOZZ	5325013942414	78276	ALS7-420-165	INSERT,SCREW THREAD 1/4-20.....	4
* 8	PAOZZ	6110014912158	19207	12479192	CONTROL,REMOTE SWITCH.....	1
* 9	PAOZZ	5305009881725	80205	NASM35206-281	SCREW,MACHINE 1/4-20 X 3/4.....	2
* 10	PAOZZ	5945007893706	19207	11613631	FLASHER,THERMAL.....	1
* 11	PAOZZ	5310012510711	34623	5593038	NUT,PLAIN,HEXAGON 1/4-20	2
* 12	PAOZZ	6220014455058	19207	12447084	CONTROL,DIRECTIONAL PART OF KIT P/N 57K3222.....	1
* 13	PAOZZ	5305004324165	96906	MS51861-26	SCREW,TAPPING #6-20 X 5/8 PART OF KIT P/N 57K3222.....	3
					END OF FIGURE	

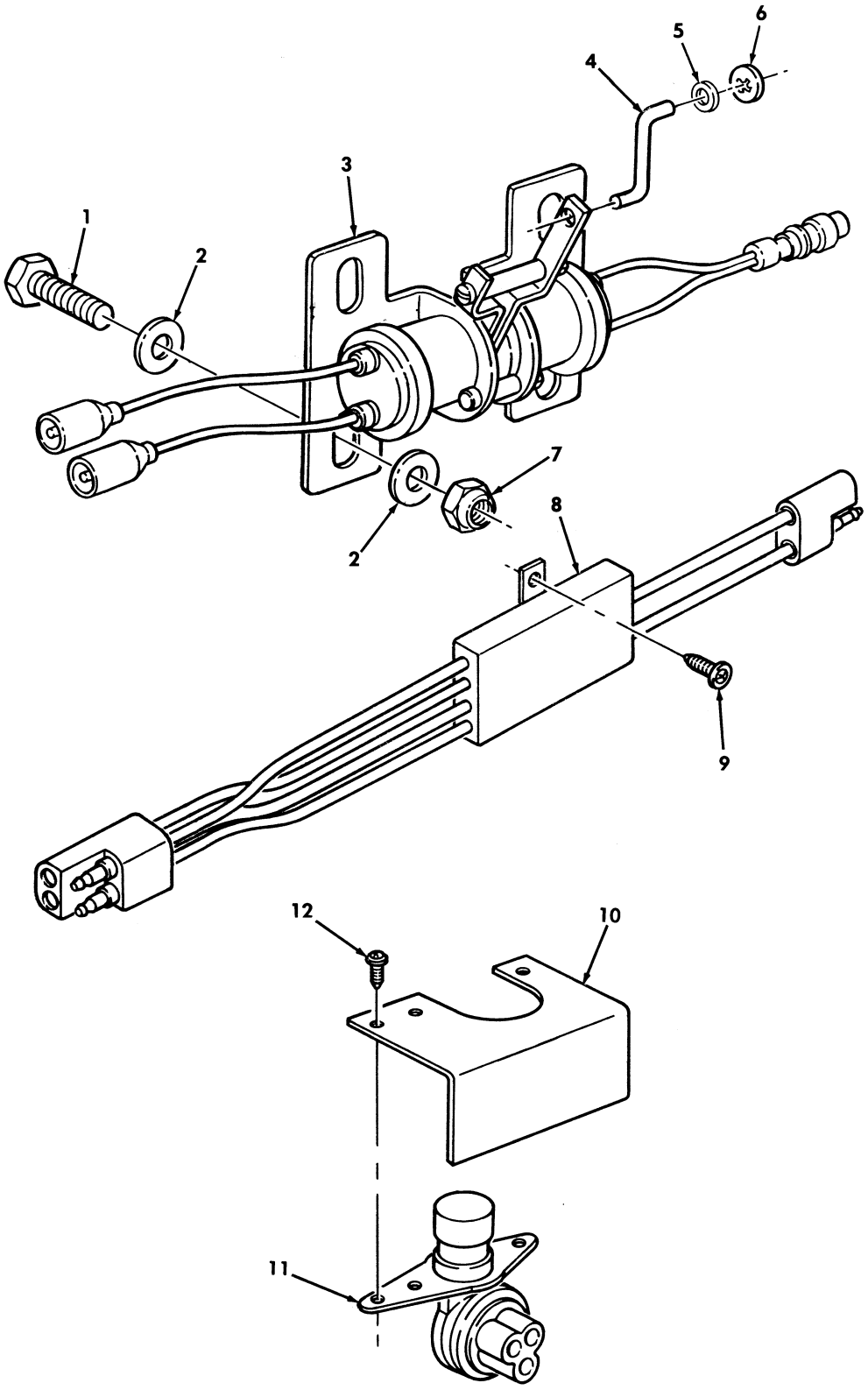

Figure 55. Stoplight/Torque Converter Clutch Brake Switch, Time Delay Module, and High Beam Selector Switch.

(1) ITEM NO	(2) SMR CODE	(3) NSN	(4) CAGEC	(5) PART NUMBER	(6) DESCRIPTION AND USABLE ON CODES(UOC)	(7) QTY
					GROUP 0608 MISCELLANEOUS ITEMS	
					FIG. 55 STOPLIGHT/TORQUE CONVERTER CLUTCH BRAKE SWITCH,TIME DELAY MODULE,AND HIGH BEAM SELECTOR SWITCH	
* 1	PAOZZ	5305009881725	80205	NASM35206-281	SCREW,MACHINE 1/4-20 X 3/4.....	2
2	PAOZZ	5310008094058	96906	MS27183-10	WASHER,FLAT 1/4.....	4
3	PAOZZ	2540014108789	19207	12460230	SWITCH,STOPLIGHT,AU.....	1
4	PAOZZ	3040014445640	34623	12460229	CONNECTING LINK,RIG.....	1
5	PAOZZ	5310004022778	24617	9416128	WASHER,FLAT.....	2
6	PAOZZ	5310011886861	19207	12339313	PUSH-ON NUT 3/16.....	2
7	PAOZZ	5310011520598	24617	271172	NUT,SELF-LOCKING,AS 1/4-20.....	2
8	PAOZZ	5945011937175	19207	12338603	RELAY,SOLID STATE.....	1
* 9	PAOZZ	5305012046502	34623	5588064	SCREW #10-32 X 1/2.....	2
10	PAOZZ	5340012097794	19207	12338726	BRACKET,ANGLE.....	1
* 11	PFOZZ	2590008012355	19207	8396186	SWITCH,BEAM SELECTI.....	1
12	PAOZZ	5305004997694	24617	454542	SCREW,ASSEMBLED WAS 1/4-20 X 1/2...	3

END OF FIGURE

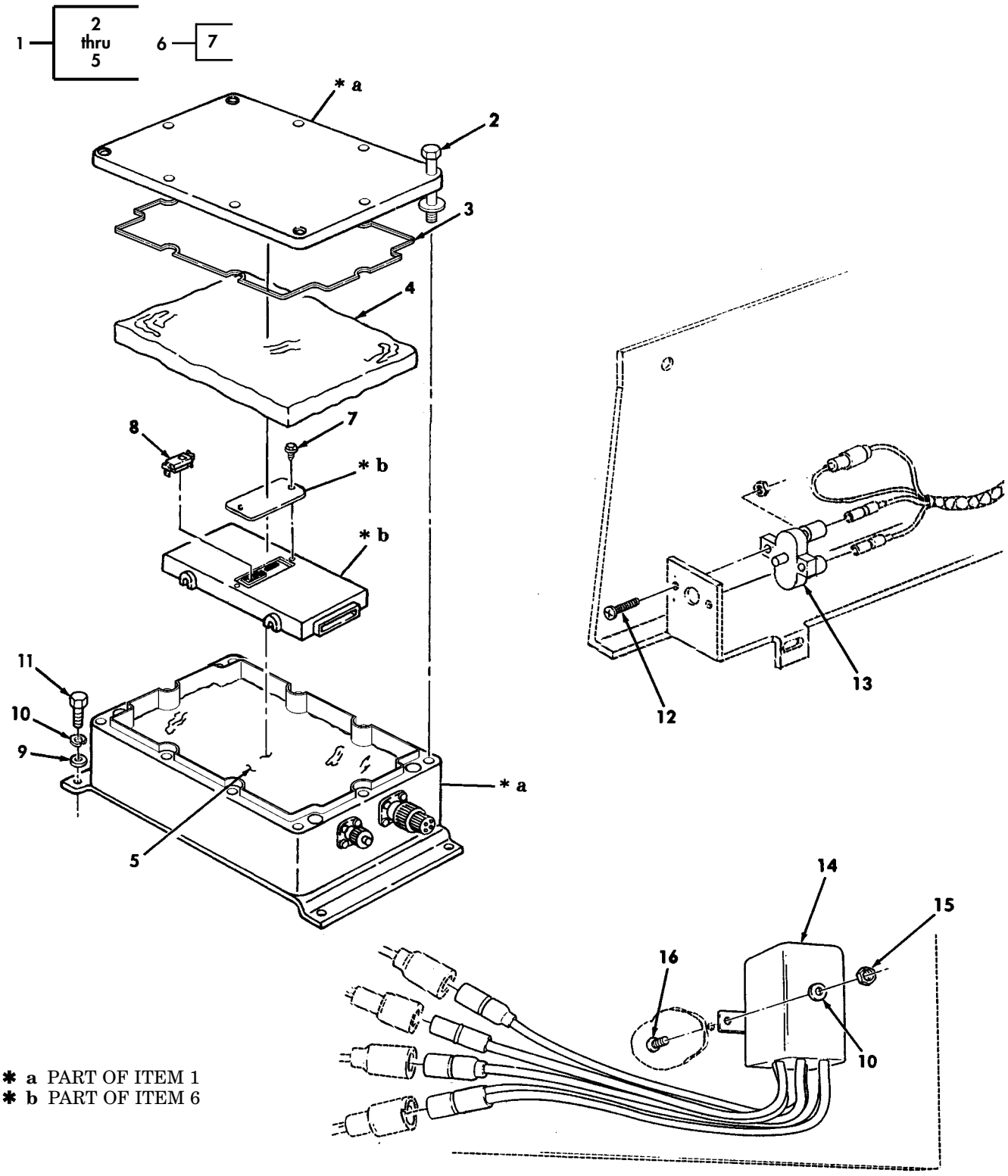

✱ **a** PART OF ITEM 1
✱ **b** PART OF ITEM 6

Figure 56. Transmission Control Module, Circuit Breaker, and Relay.

(1) ITEM NO	(2) SMR CODE	(3) NSN	(4) CAGEC	(5) PART NUMBER	(6) DESCRIPTION AND USABLE ON CODES(UOC)	(7) QTY
					GROUP 0608 MISCELLANEOUS ITEMS	
					FIG. 56 TRANSMISSION CONTROL MODULE, CIRCUIT BREAKER,AND RELAY	
1	PAOOO	2520014899279	34623	12460399-1	MODULATOR,TRANSMISS.....	1
2	PAOZZ	5306014621445	5A910	1620289-383G	.BOLT,INTERNAL WRENC.....	4
* 3	PAOZZ	5330014959370	19207	57K4389	.GASKET.....	1
* 4	PAOZZ	2540014819194	19207	12460407-2	.INSULATION,THERMAL.....	1
* 5	PAOZZ	2540014819178	19207	12460407-1	.INSULATION,THERMAL.....	1
* 6	PAOZZ	5940014302764	16764	16196390	TERMINAL BOX.....	1
* 7	PAOZZ	5305010763150	96906	MS51851-34	.SCREW,TAPPING.....	2
* 8	PAOZZ	5962014315121	7X677	16244697	MICROCIRCUIT,LINEAR USE WITH 1996 TRANSMISSION ONLY.....	1
* 8	PAOZZ	5962014410369	1LW55	16251212	MICROCIRCUIT,MEMORY USE WITH 1997 TRANSMISSION ONLY PART OF KIT P/N 57K3522.....	1
* 8	PAOZZ	5962014704621	0NJT4	16266438	MICROCIRCUIT LINEAR USE WITH 1998 TRANSMISSION ONLY PART OF KIT P/N 57K3540.....	1
* 8	PAOZZ	5962014805246	34623	5715758	MICROCIRCUIT,MEMORY USE WITH 1999 TRANSMISSION ONLY PART OF KIT P/N 57K3548.....	1
* 8	PAOZZ	5962014805248	34623	5715896	MICROCIRCUIT,MEMORY USE WITH 2000 TRANSMISSION ONLY PART OF KIT P/N 57K3559.....	1
* 8	PAOZZ	5962014972519	34623	5716029	MICROCIRCUIT,MEMORY USE WITH 2001 TRANSMISSION ONLY PART OF KIT P/N 57K3570.....	1
* 9	PAOZZ	5310008094058	96906	MS27183-10	WASHER,FLAT 9/32.....	6
* 10	PAOZZ	5310005825965	99539	CBM21389	WASHER,LOCK.....	4
* 11	PAOZZ	5305013734831	80204	B1821BH025F075N	SCREW,CAP,HEXAGON H 1/4-28 X 3/4...	4
* 12	PAOZZ	5305009846197	80205	MS35206-249	SCREW,MACHINE #8-32 X 1.00.....	2
* 13	PAOZZ	5925008948015	58536	AA55571/02/001	CIRCUIT BREAKER.....	1
* 14	PAOZZ	5945014130886	19207	12460116	RELAY,SOLID STATE.....	1
* 15	PAOZZ	5310000881251	81349	M45913/1-4CG5C	NUT,SELF-LOCKING,HE.....	2
* 16	PAOZZ	5305000680502	80205	MS90725-6	SCREW,CAP HEXAGON H 1/4-20 X 3/4...	2

END OF FIGURE

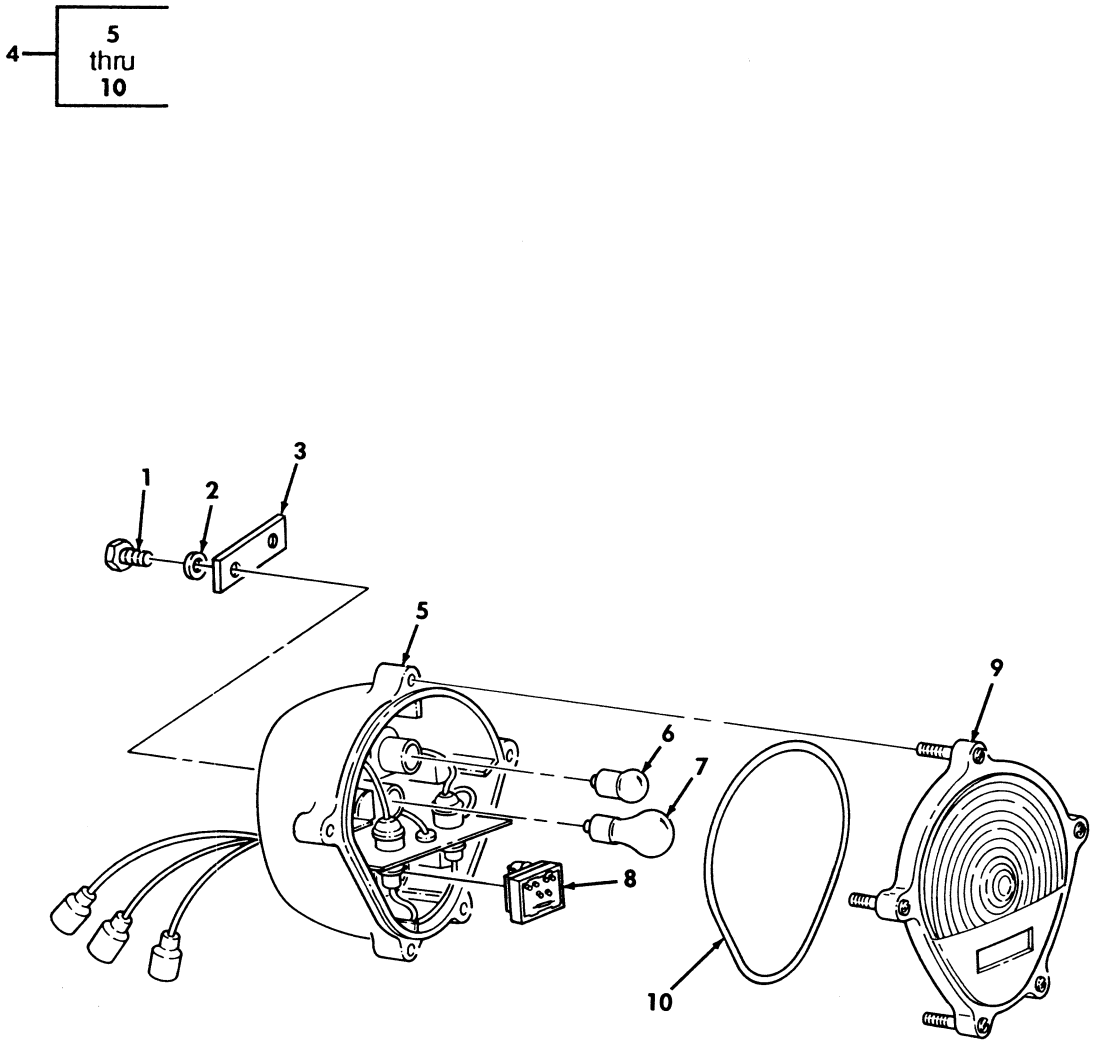

Figure 57. Front Composite Light and Mounting Hardware.

(1) ITEM NO	(2) SMR CODE	(3) NSN	(4) CAGEC	(5) PART NUMBER	(6) DESCRIPTION AND USABLE ON CODES(UOC)	(7) QTY
					GROUP 0609 LIGHTS	
					FIG. 57 FRONT COMPOSITE LIGHT AND MOUNTING HARDWARE	
1	PAOZZ	5305005434372	80204	B1821BH038C075N	SCREW,CAP,HEXAGON H 3/8-16 X 3/4...	4
2	PAOZZ	5310000877493	96906	MS27183-13	WASHER,FLAT 3/8.....	4
3	PAOZZ	5340011837233	19207	12338608	PLATE,MOUNTING.....	2
4	PAOOO	6220008801624	68505	105651	LIGHT,PARKING.....	2
* 5	PAOZZ	6220010674718	19207	11639541	.BODY ASSEMBLY.....	1
6	PAOZZ	6240000193093	11083	2D1959	.LAMP,INCANDESCENT.....	1
* 7	PAOZZ	6240000446914	08108	1683	.LAMP,INCANDESCENT.....	1
8	PAOZZ	5961013058848	19207	12360865	.SEMICONDUCTOR DEVIC.....	1
9	PAOZZ	6220001794325	19207	11639546	.LENS,LIGHT.....	1
10	PAOZZ	5331004630200	19207	11639519-1	.O-RING.....	1

END OF FIGURE

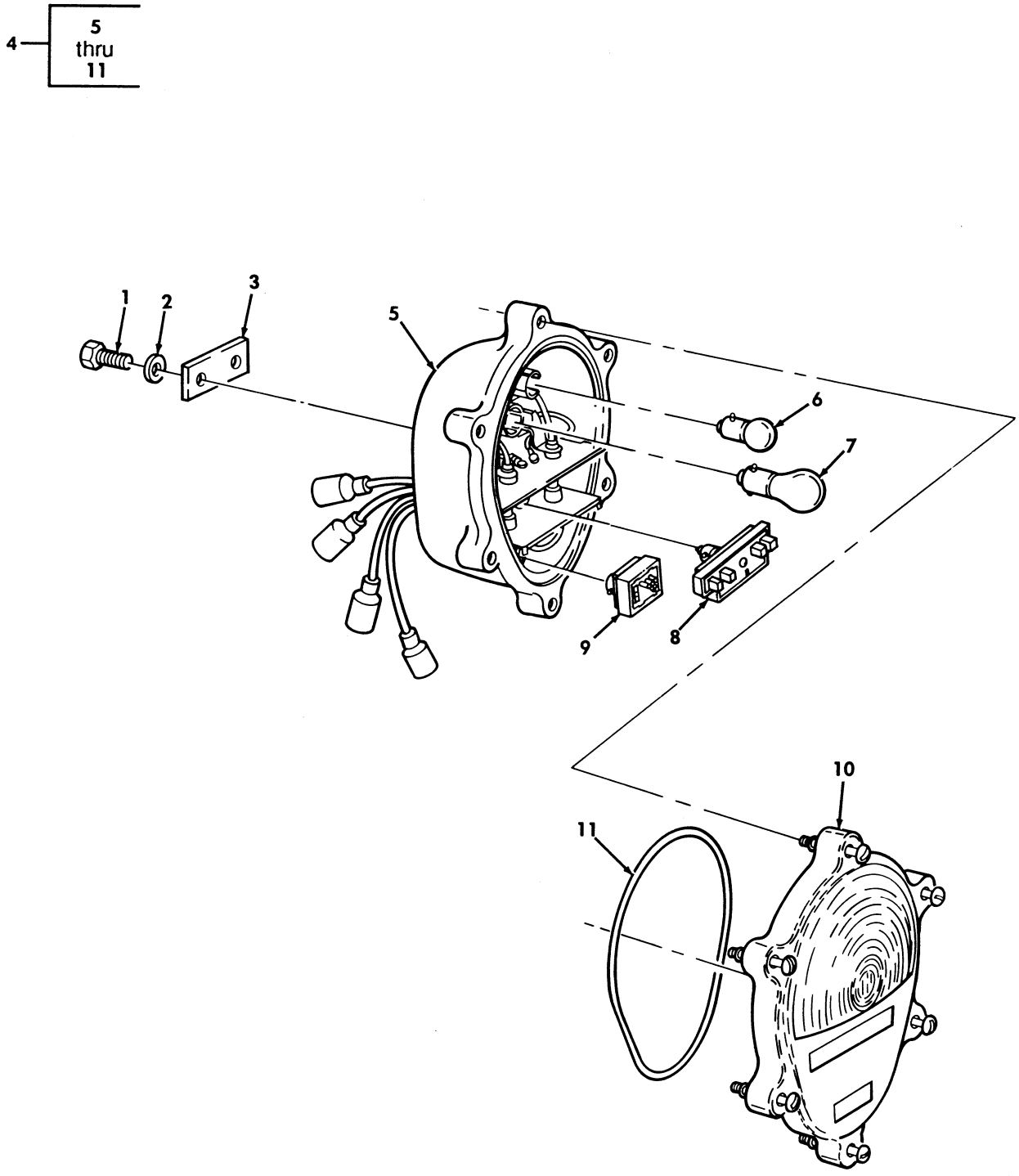

Figure 58. Rear Composite Light and Mounting Hardware.

(1) ITEM NO	(2) SMR CODE	(3) NSN	(4) CAGEC	(5) PART NUMBER	(6) DESCRIPTION AND USABLE ON CODES(UOC)	(7) QTY
					GROUP 0609 LIGHTS	
					FIG. 58 REAR COMPOSITE LIGHT AND MOUNTING HARDWARE	
1	PAOZZ	5305005434372	80204	B1821BH038C075N	SCREW,CAP,HEXAGON H 3/8-16 X 3/4...	4
2	PAOZZ	5310000806004	96906	MS27183-14	WASHER,FLAT 3/8.....	4
3	PAOZZ	5340011837233	19207	12338608	PLATE,MOUNTING.....	2
4	PAOOO	6220013723883	19207	12375837	TAILLIGHT,VEHICULAR.....	2
5	XAOZZ		19207	12375838	.BODY ASSEMBLY.....	1
6	PAOZZ	6240000193093	11083	2D1959	.LAMP,INCANDESCENT.....	1
* 7	PAOZZ	6240000446914	08108	1683	.LAMP,INCANDESCENT.....	1
8	PAOZZ	6220012842709	19207	12360850-1	.LIGHT,MARKER,CLEARA.....	2
9	PAOZZ	6220012973217	19207	12360870-2	.STOP LIGHT,VEHICULA.....	1
10	PAOZZ	6220013592870	19207	12375841	.LENS,LIGHT.....	1
11	PAOZZ	5331004620907	19207	11639519-2	.O-RING.....	1

END OF FIGURE

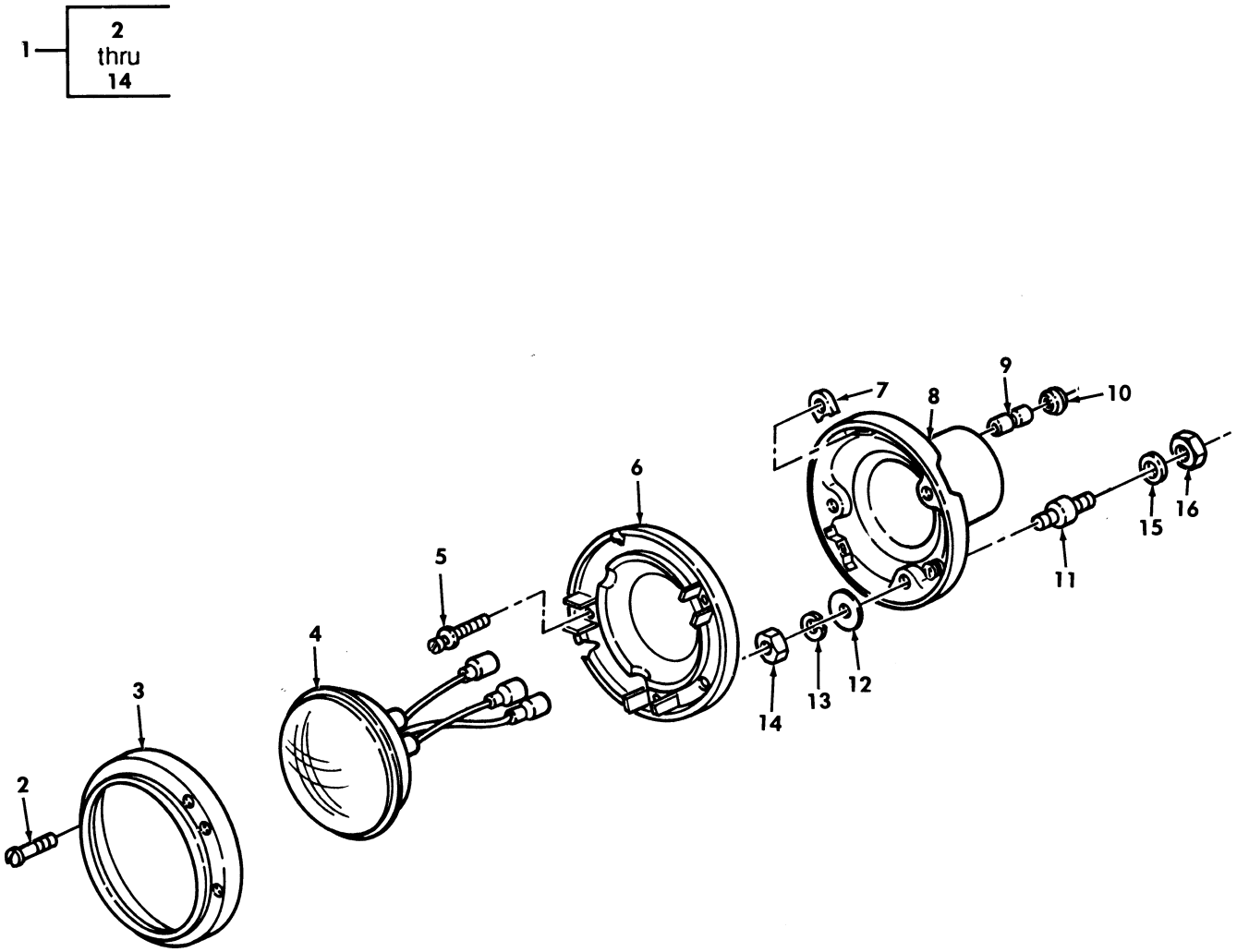

Figure 59. Headlight Assembly.

(1) ITEM NO	(2) SMR CODE	(3) NSN	(4) CAGEC	(5) PART NUMBER	(6) DESCRIPTION AND USABLE ON CODES(UOC)	(7) QTY
					GROUP 0609 LIGHTS	
					FIG. 59 HEADLIGHT ASSEMBLY	
1	PAOOO	6220011931970	19207	12338611	HEADLIGHT.....	2
2	PAOZZ	5305008325743	19207	8741437	.SCREW,EXTERNALLY RE 1/4-20 X 1.125	3
3	PAOZZ	5325008325650	19207	8741446	.RING,RETAINING.....	1
4	PAOZZ	6240009663831	19207	8741491	.LAMP,INCANDESCENT.....	1
5	PAOZZ	5305003530969	19207	7538146	.SCREW,EXTERNALLY RE 1/4-28 X 1.00.	2
6	PFOZZ	6220009986142	19207	8741447	.RETAINER,LENS.....	1
7	PFOZZ	5310002416921	19207	8741435	.NUT BLANK.....	2
8	PFOZZ	6220004430589	19207	8741461	.HOUSING,LIGHT.....	1
9	PAOZZ	5935008074109	19207	8741492	.ADAPTER,CONNECTOR.....	3
10	PAOZZ	5325000886147	19207	8741442	.GROMMET,NONMETALLIC.....	3
11	PAOZZ	5340011972438	34623	5591169	.MOUNT,RESILIENT.....	3
12	PAOZZ	5310004630268	19207	5310615	.WASHER,FLAT 1/4.....	3
13	PAOZZ	5310005825965	96906	MS35338-44	.WASHER,LOCK 1/4.....	3
14	PAOZZ	5310007680319	96906	MS51968-2	.NUT,PLAIN,HEXAGON 1/4-28.....	3
15	PAOZZ	5310008094058	96906	MS27183-10	WASHER,FLAT 1/4.....	6
16	PAOZZ	5310013335245	24617	271175	NUT,SELF-LOCKING,HE 1/4-28.....	6

END OF FIGURE

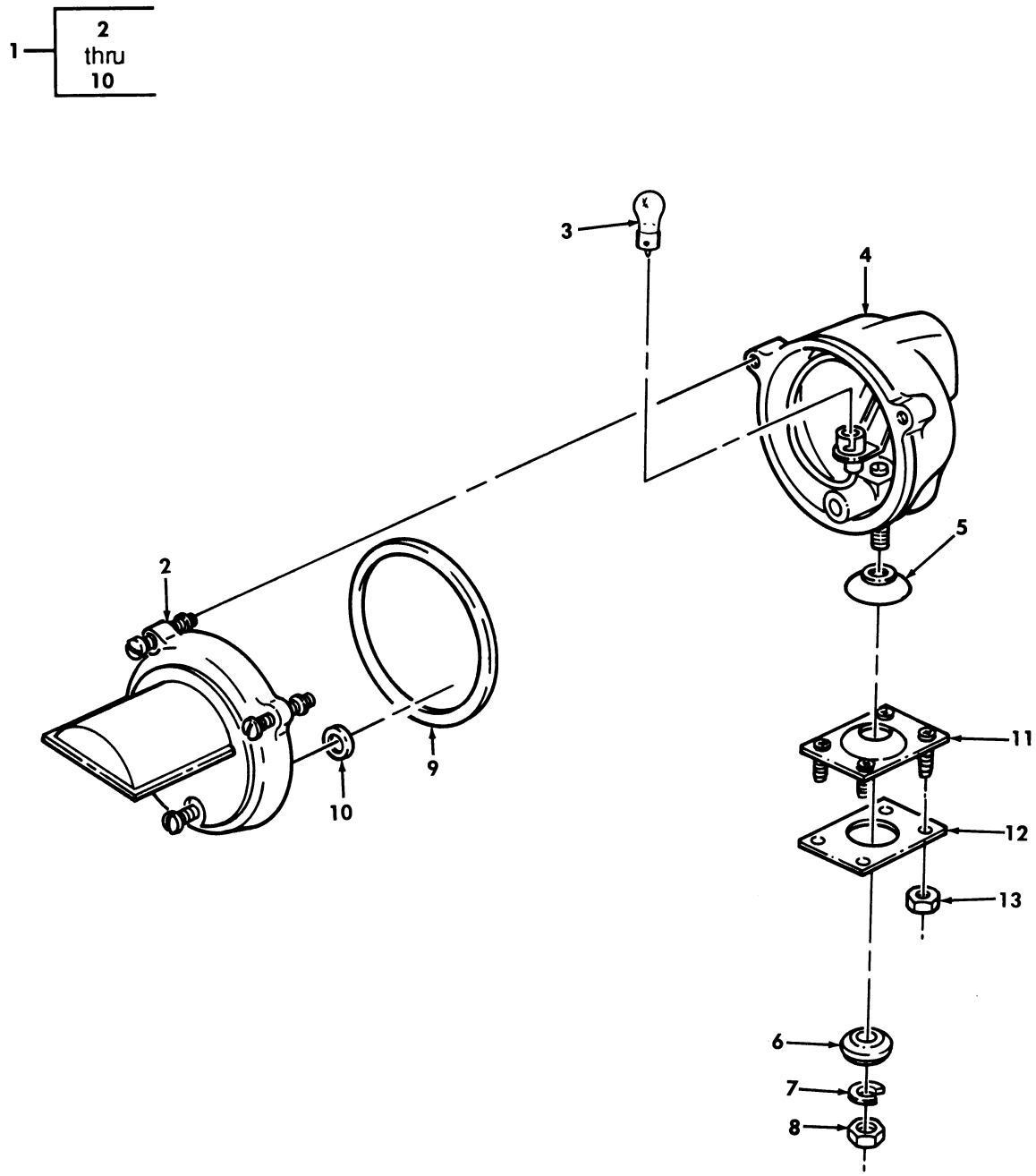

Figure 60. Blackout Lamp Assembly.

(1) ITEM NO	(2) SMR CODE	(3) NSN	(4) CAGEC	(5) PART NUMBER	(6) DESCRIPTION AND USABLE ON CODES(UOC)	(7) QTY
					GROUP 0609 LIGHTS	
					FIG. 60 BLACKOUT LAMP ASSEMBLY	
* 1	PAOOO	6220014961925	13548	07320	LIGHT,BLACKOUT.....	1
2	PFOZZ	6220011280087	13873	DGSCV-91-157	.DOOR,BLACKOUT LAMP.....	1
* 3	PAOZZ	6240000446914	08108	1683	.LAMP,INCANDESCENT.....	1
4	PAOZZ	6220011072613	5A910	DC8218	.RETAINER,LENS.....	1
5	PAOZZ	5310011002067	19207	11668979	.WASHER,LOCK 13/32.....	1
6	PAOZZ	5310003502655	19207	5294507	.WASHER,FINISHING.....	1
* 7	PAOZZ	5310006379541	80205	MS35338-46	.WASHER,LOCK 3/8.....	1
8	PAOZZ	5310007320558	96906	MS51967-8	.NUT,PLAIN,HEXAGON 3/8-16 X 1.25...	1
9	PAOZZ	5330010370663	34623	MA128-21182	.GASKET.....	1
* 10	PAOZZ	5330010766172	5A910	DC8226	.GASKET.....	3
11	PAOZZ	5340012866191	19207	12338605	COVER,ACCESS.....	1
12	PFOZZ	5365012115063	34623	5579941	SPACER,PLATE.....	1
* 13	PAOZZ	5310012510760	34623	271166	NUT,PLAIN,ASSEMBLED #10-24.....	4

END OF FIGURE

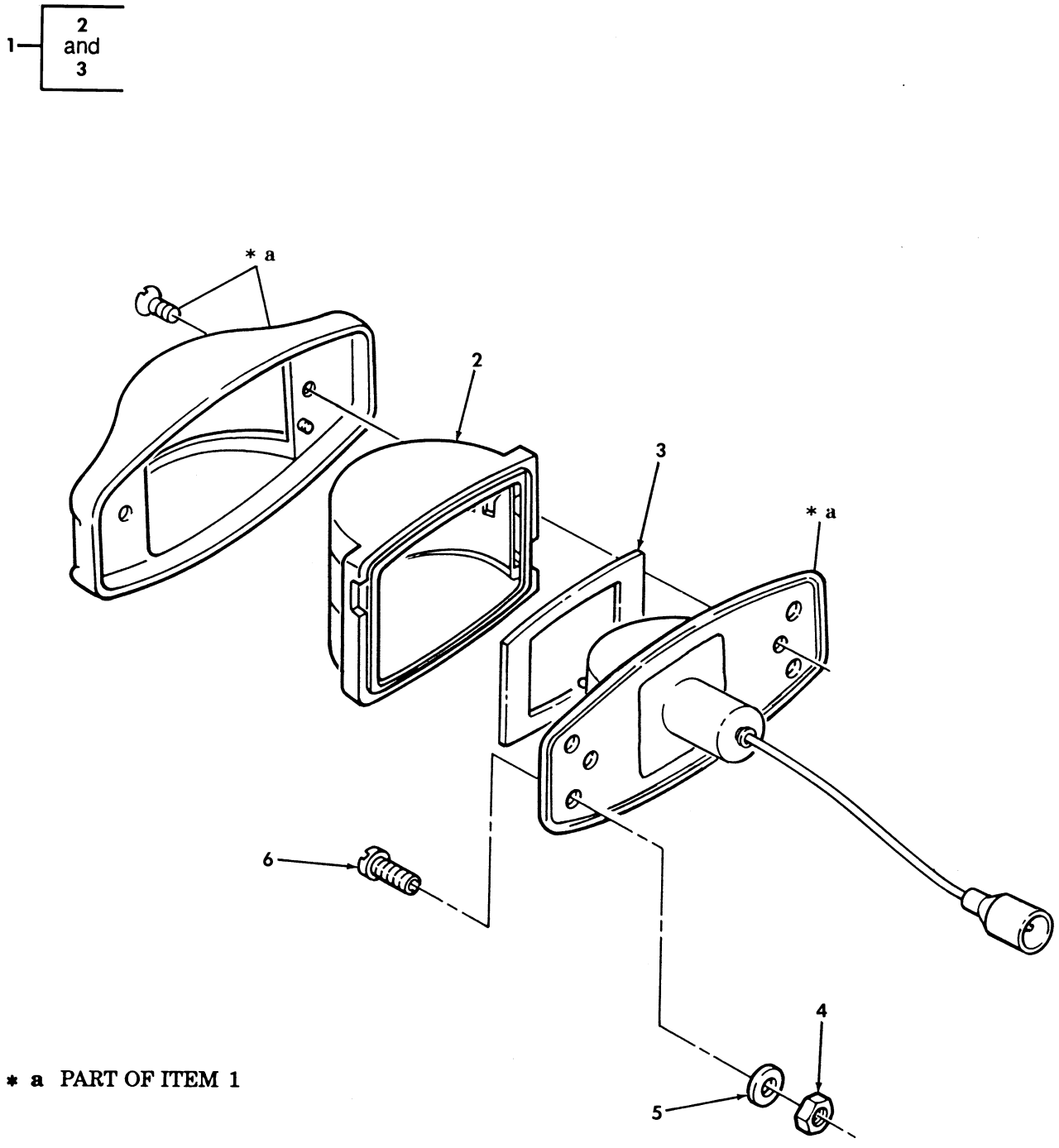

Figure 61. Clearance Marker Light Assembly.

(1) ITEM NO	(2) SMR CODE	(3) NSN	(4) CAGEC	(5) PART NUMBER	(6) DESCRIPTION AND USABLE ON CODES(UOC)	(7) QTY
					GROUP 0609 LIGHTS	
					FIG. 61 CLEARANCE MARKER LIGHT ASSEMBLY	
1	PAOOO	6220014184044	19207	12446845-1	LIGHT,INDICATOR FRONT CLEARANCE....	2
1	PAOOO	5980014439093	19207	12446845-2	LIGHT EMITTING DIOD REAR CLEARANCE.	2
2	PAOZZ	6220002997425	96906	MS35241-1	.LENS,LIGHT FRONT,AMBER.....	1
2	PAOZZ	6220002997426	96906	MS35241-2	.LENS,LIGHT REAR,RED.....	1
3	PAOZZ	5330003530959	73331	5939841	.FELT,MECHANICAL,PRE.....	1
* 4	PAOZZ	5310009349764	80205	MS35649-205B	NUT,PLAIN,HEXAGON HE REAR,#10-24...	8
4	PAOZZ	5310012520481	34623	5593048	NUT,SELF-LOCKING,HE FRONT,#10-32...	8
5	PAOZZ	5310000145850	96906	MS27183-42	WASHER,FLAT #10.....	16
* 6	PAOZZ	5305009846212	96906	MS35206-265	SCREW,MACHINE REAR,#10-24 X 5/8....	8
* 6	PAOZZ	5305009846211	80205	MS35206-264	SCREW,MACHINE FRONT,#10-32 X 7/8...	8

END OF FIGURE

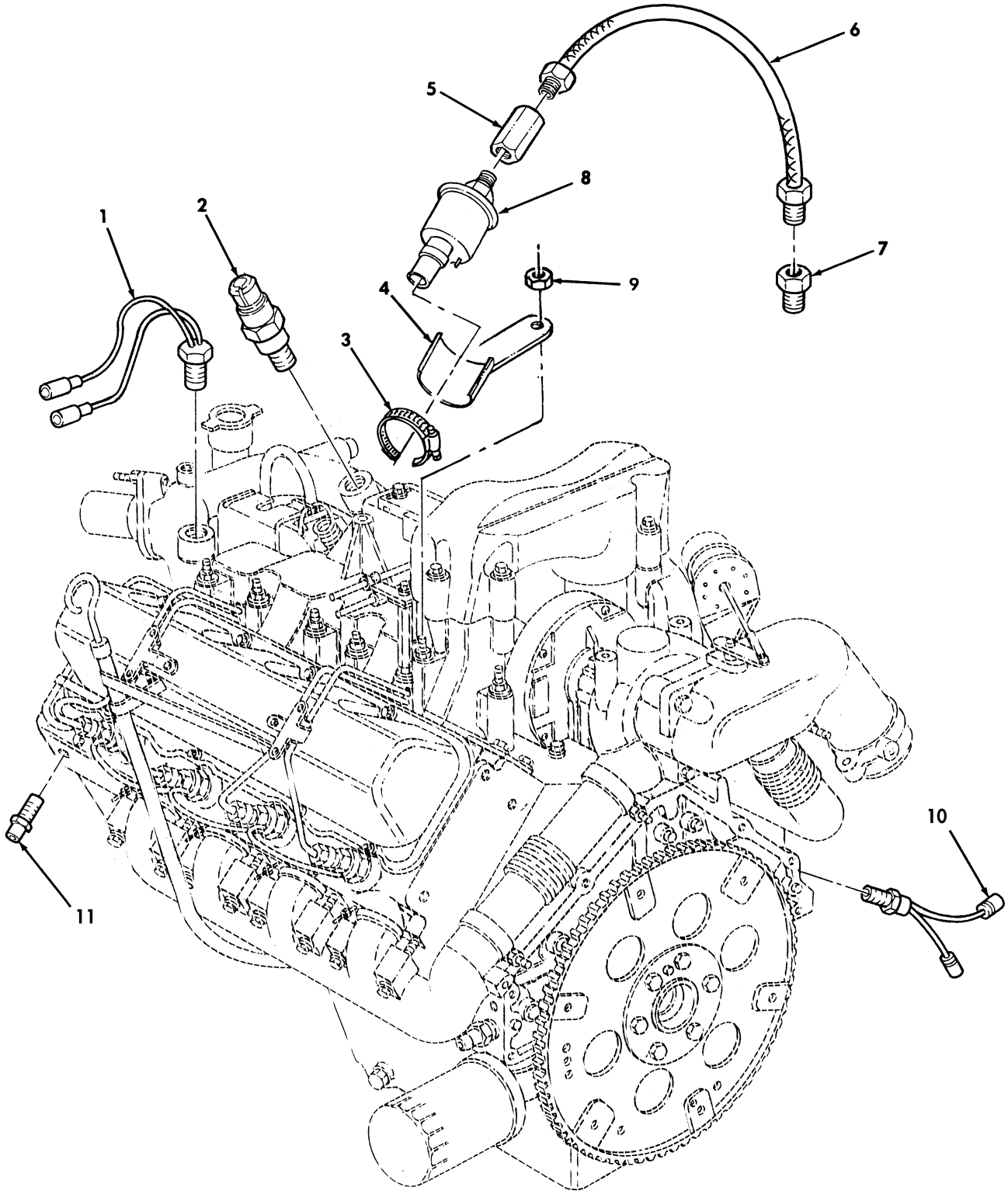

Figure 62. Sending Units.

(1) ITEM NO	(2) SMR CODE	(3) NSN	(4) CAGEC	(5) PART NUMBER	(6) DESCRIPTION AND USABLE ON CODES(UOC)	(7) QTY
					GROUP 0610 SENDING UNITS AND WARNING SWITCHES	
					FIG. 62 SENDING UNITS	
1	PAOZZ	5930012377322	19207	12338599	SWITCH,THERMOSTATIC FAN.....	1
2	PAOZZ	2920011757214	19207	12338772	CONTROL UNIT,BREAKE GLOW PLUG CONTROLER,USE WITH P/N 12446779 ONLY	1
2	PAOZZ	2920014696903	19207	12469158-2	CONTROL UNIT,BREAKE GLOW PLUG CONTROLER,USE WITH P/N 12469158-1 ONLY.....	1
3	PAOZZ	4730010894596	24161	32028	CLAMP,HOSE.....	1
4	PAOZZ	5340014561502	34623	RCSK18088	BRACKET,MOUNTING.....	1
5	PAOZZ	4730011876892	01276	2096-4S	COUPLING,PIPE.....	1
6	PAOZZ	4720015053475	34623	5715342	HOSE ASSEMBLY.....	1
7	PAOZZ	4730002891254	79470	200X6	ADAPTER,STRAIGHT,PI.....	1
* 8	PAOZZ	6620009935546	96906	MS24539	TRANSMITTER,PRESSUR.....	1
9	PAOZZ	5310011552503	7X677	11514603	NUT,PLAIN,HEXAGON 10-1.5 MM.....	1
10	PAOZZ	5930011836637	19207	12338596	SWITCH,THERMOSTATIC COLD ADVANCE...	1
11	PAOZZ	6620011946586	09527	TS6058	TRANSMITTER,ENGINE COOLANT TEMPERATURE.....	1

END OF FIGURE

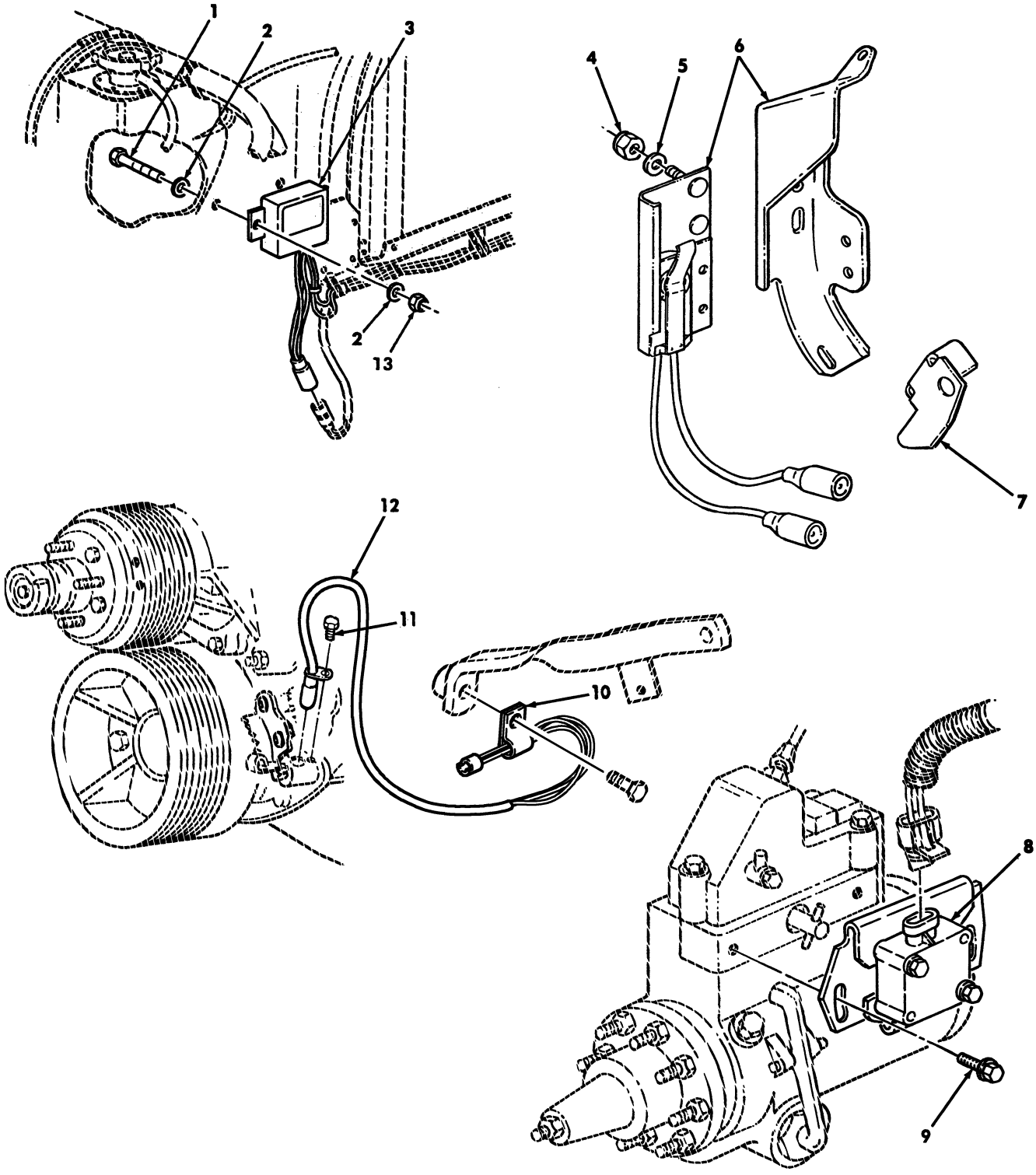

Figure 63. STE/ICE Frequency, Converter Module, Fan Cut-off Switch, Throttle Position Sensor, and Speed Sensor.

(1) ITEM NO	(2) SMR CODE	(3) NSN	(4) CAGEC	(5) PART NUMBER	(6) DESCRIPTION AND USABLE ON CODES(UOC)	(7) QTY
					GROUP 0610 SENDING UNITS AND WARNING SWITCHES	
					FIG. 63 STE/ICE FREQUENCY,CONVERTER MODULE,FAN CUT-OFF SWITCH,THROTTLE POSITION SENSOR,AND SPEED SENSOR	
1	PAOZZ		24617	9422197	SCREW.....	2
2	PAOZZ	5310000120391	24617	120391	WASHER FLAT.....	4
3	PAOZZ	5895014353947	21699	28200	CONVERTER,FREQUENCY, STE/ICE FREQUENCY.....	1
4	PAOZZ	5310002514503	24617	9411893	NUT,SELF-LOCKING,#10-32.....	2
5	PAOZZ	5310013611163	24617	9417373	WASHER,FLAT #10.....	2
* 6	PAOZZ	5930014333142	19207	12460518	SWITCH,SENSITIVE WATERPROOF FAN CUT-OFF.....	1
* 7	PAOZZ	5340014330931	34623	12460514	BRACKET,MOUNTING.....	1
8	PAOZZ	2990014264425	7X677	12554488	THROTTLE SOLENOID,E.....	1
9	PAOZZ	5306014228649	7X677	23500801	BOLT,MACHINE.....	2
* 10	PAOZZ	5340009848540	96906	MS21333-102	CLAMP,LOOP.....	1
* 11	PAFZZ	5306011524693	24617	11504986	BOLT,MACHINE M10-1.5.....	1
* 12	PAOZZ	2815014558424	7X677	12554092	SENSOR,RPM.....	1
* 13	PAOZZ	5310014618043	24617	9411807	NUT,SELF-LOCKING,EXTE WASHER.....	2

END OF FIGURE

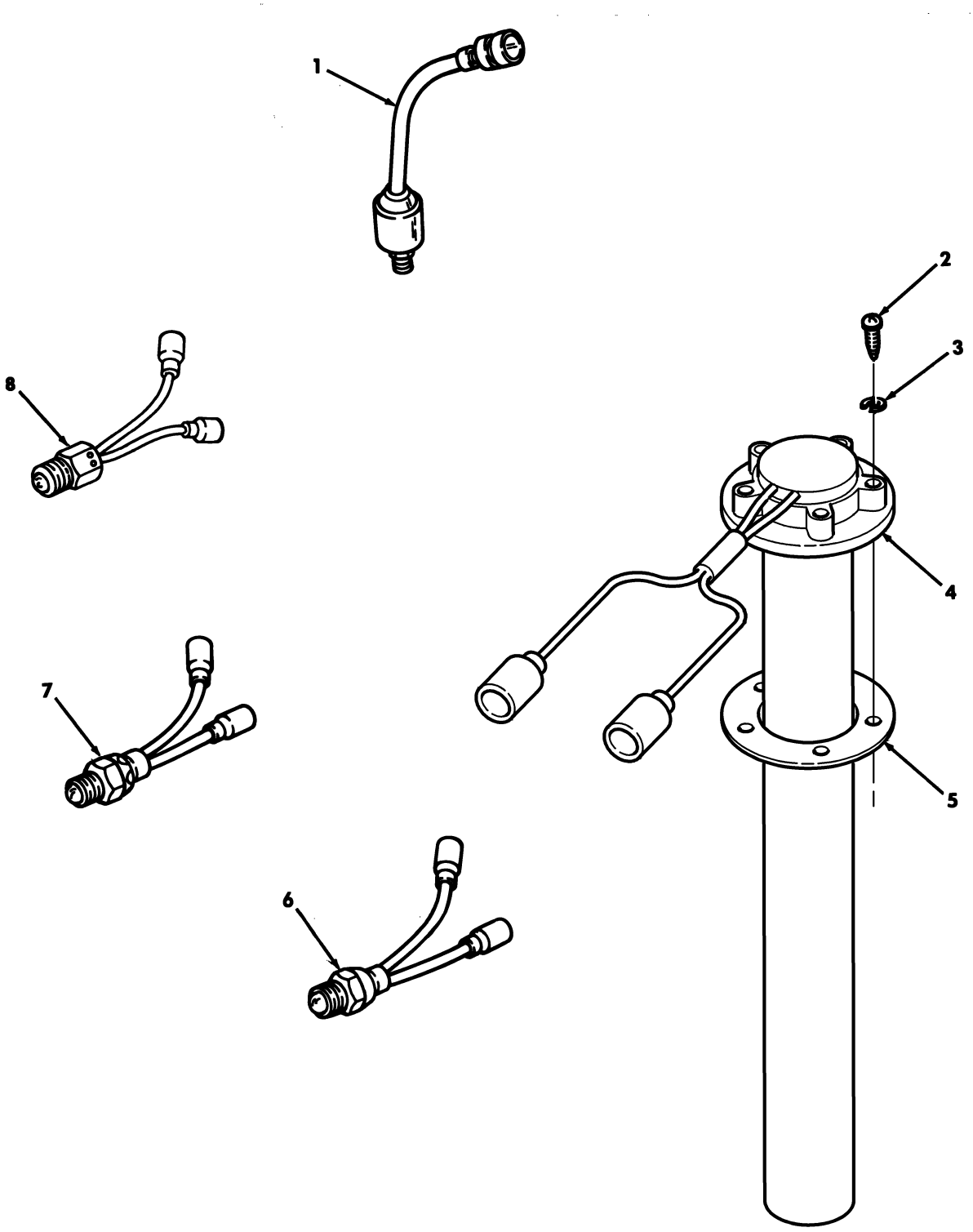

Figure 64. Fuel Pressure Transducer, Fuel Level Transmitter, Parking Brake, Backup Light Switches, and Transfer Indicator Switch.

(1) ITEM NO	(2) SMR CODE	(3) NSN	(4) CAGEC	(5) PART NUMBER	(6) DESCRIPTION AND USABLE ON CODES(UOC)	(7) QTY
					GROUP 0610 SENDING UNIT AND WARNING SWITCHES	
					FIG. 64 FUEL PRESSURE TRANSDUCER, FUEL LEVEL TRANSMITTER,PARKING BRAKE,BACKUP LIGHT SWITCHES,AND TRANSFER INDICATOR SWITCH	
1	PAOZZ	6685011674295	34623	12558932-6	TRANSMITTER,PRESSUR.....	1
* 2	PAOZZ	5305014782767	24617	454774	SCREW,MACHINE #10-24 X 1-1/4.....	5
3	PAOZZ	5310009222017	72582	120217	WASHER,LOCK #10.....	5
* 4	PAOZZ	6680014845367	0B8Y6	9606060-004	TRANSMITTER,LIQUID.....	1
5	PAOZZ	5330007539072	19207	7539072	GASKET.....	1
6	PAOZZ	5930012123373	19207	12338435	SWITCH,SENSITIVE.....	1
7	PAOZZ	5930011836757	19207	12356704	SWITCH,PUSH.....	1
8	PAOZZ	6220013615084	34623	5938705	LIGHT,INDICATOR USE WITH TRANSFER ASSEMBLY P/N 59377387 OR P/N 12447125	1

END OF FIGURE

5 — 6 and 7

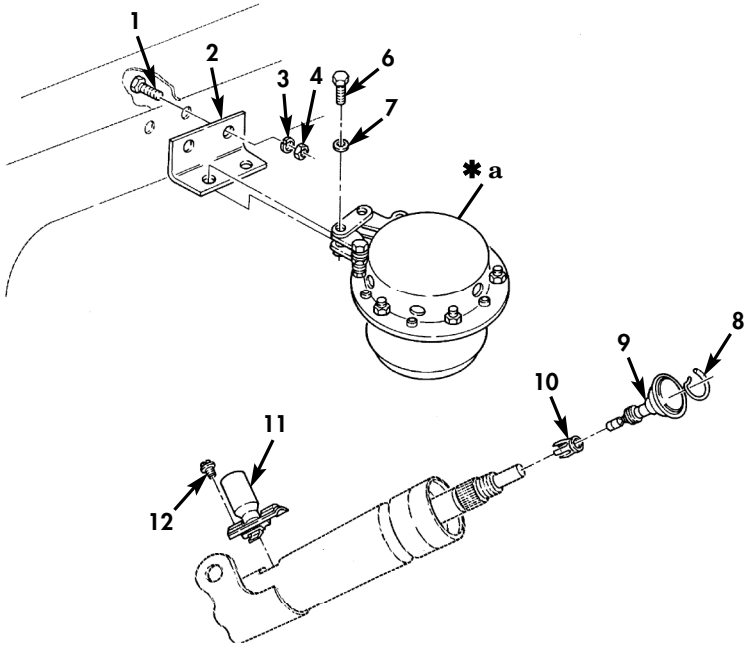

✱a PART OF ITEM 5

SERIAL NUMBER 299999
AND BELOW

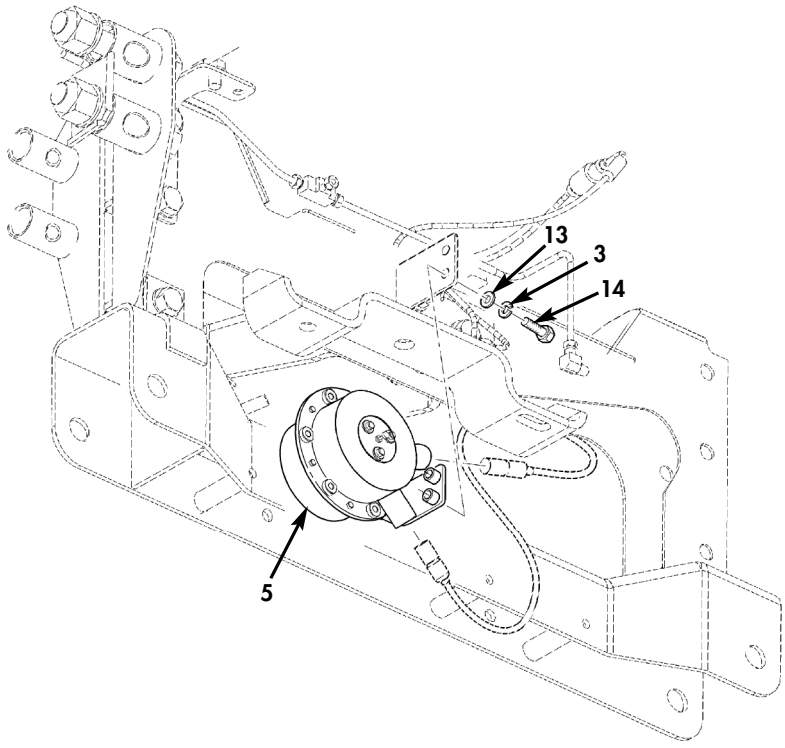

SERIAL NUMBER 300000
AND ABOVE

Figure 65. Horn Assembly and Mounting Hardware.

(1) ITEM NO	(2) SMR CODE	(3) NSN	(4) CAGEC	(5) PART NUMBER	(6) DESCRIPTION AND USABLE ON CODES(UOC)	(7) QTY
					GROUP 0611 HORN,SIREN	
					FIG. 65 HORN ASSEMBLY AND MOUNTING HARDWARE	
* 1	PAOZZ	5305000680502	96906	MS90725-6	SCREW,CAP,HEXAGON H 1/4-20 X 3/4...	2
* 2	PFOZZ	5340011897558	19207	12338609	BRACKET,ANGLE SERIAL NUMBER 299999 AND BELOW..... UOC:XXB,XXA	1
* 2	PAOZZ		19207	12528859	BRACKET,ANGLE SERIAL NUMBER 300000 AND ABOVE..... UOC:TTA,TTT,TT1,UUA,UUU,UU1,UU2	1
* 3	PAOZZ	5310005825965	80205	MS35338-44	WASHER,LOCK 1/4	2
* 4	PAOZZ	5310011480240	7X677	9419143	NUT,PLAIN,HEXAGON 1/4-20	2
* 5	PAOZZ	2590006830598	58536	A-A-52525-21	HORN,ELECTRICAL	1
* 6	PAOZZ	5306000680513	80204	B1821BH025F075N	.SCREW,CAP,HEXAGON H 1/4-28 X 3/4 SERIAL NUMBER 299999 AND BELOW..... UOC:XXA,XXB	2
* 7	PAOZZ	5310005501130	80205	MS35333-40	.WASHER,LOCK 1/4 SERIAL NUMBER 299999 AND BELOW..... UOC:XXA,XXB	2
* 8	PAOZZ	5325011444871	19207	8754124	RING,RETAINING.....	1
* 9	PAOZZ	2530011890897	19207	12340074	HORN BUTTON,VEHICLE.....	1
* 10	PAOZZ	5930011538215	19207	8754125	RETAINER,ELECTRICAL.....	1
* 11	PAOZZ	5977011939931	34623	12469156	CONTACT-TERMINAL,HO.....	1
* 12	PAOZZ	5305011977547	81263	46827	SCREW,ASSEMBLED WAS.....	2
* 13	PAOZZ	5310011023270	34623	2436161	WASHER,FLAT 1/4 SERIAL NUMBER 300000 AND ABOVE..... UOC:TTA,TTT,TT1,UUA,UUU,UU1,UU2	2
* 14	PAOZZ	5305002253843	80204	B1821BH025C100N	SCREW,CAP,HEXAGON H 1/4-20 X 1.00 SERIAL NUMBER 300000 AND ABOVE..... UOC:TTA,TTT,TT1,UUA,UUU,UU1,UU2	2

END OF FIGURE

UNIT, DIRECT SUPPORT, AND GENERAL SUPPORT MAINTENANCE
REPAIR PARTS AND SPECIAL TOOLS LIST

TRUCK, UTILITY: S250 SHELTER CARRIER, 4X4, M1113 (2320-01-412-0143),
TRUCK, UTILITY: UP-ARMORED CARRIER, 4X4, M1114 (2320-01-413-3739)

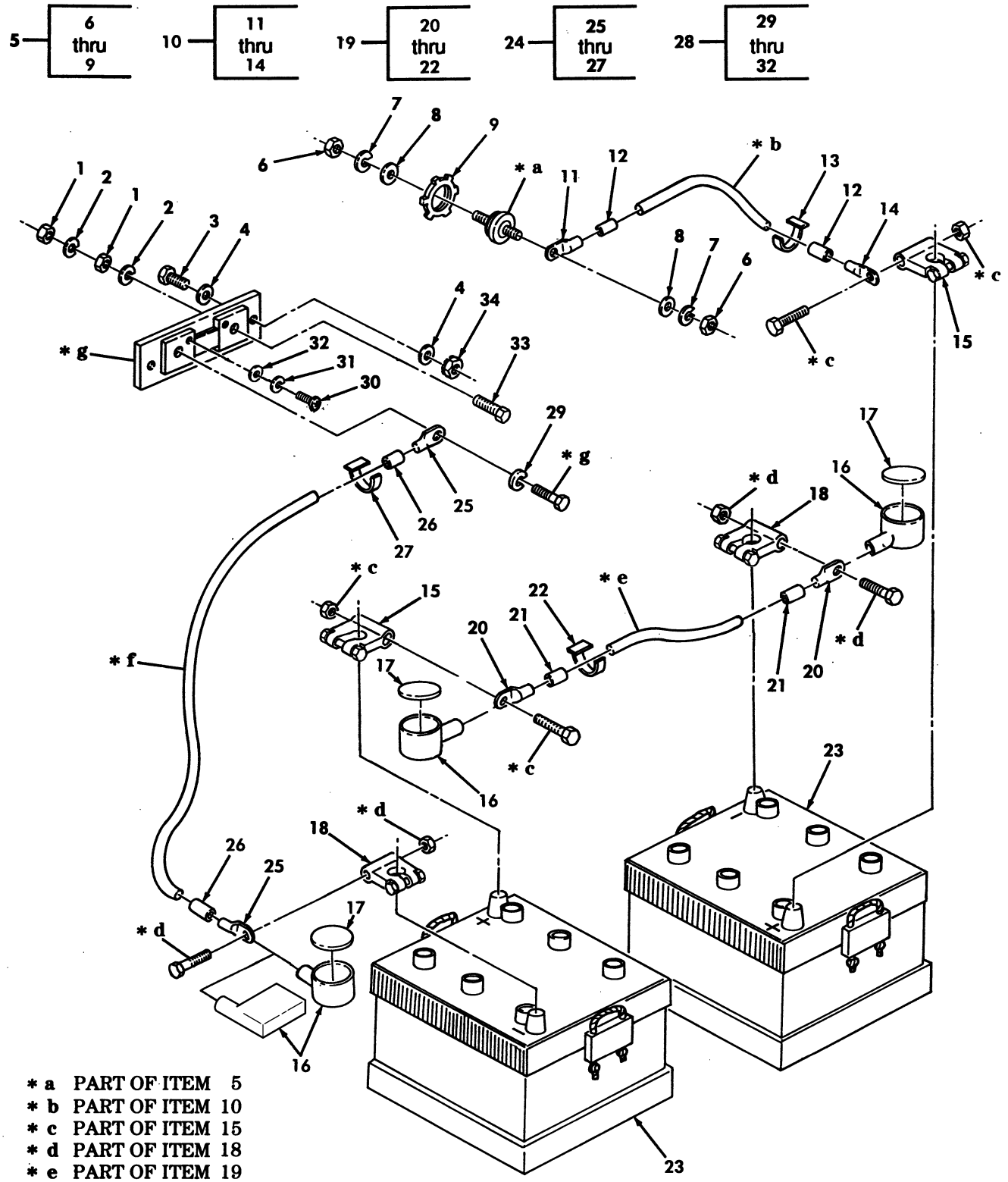

Figure 66. Batteries, Cables, and Related Parts.

(1) ITEM NO	(2) SMR CODE	(3) NSN	(4) CAGEC	(5) PART NUMBER	(6) DESCRIPTION AND USABLE ON CODES(UOC)	(7) QTY
					GROUP 0612 BATTERIES,STORAGE	
					FIG. 66 BATTERIES, CABLES, AND RELATED PARTS	
1	PAOZZ	5310007680318	24617	9413509	NUT,PLAIN,HEXAGON 1/2-13.....	2
2	PAOZZ	5310005845272	02978	ERNA245	WASHER,LOCK 1/2.....	2
3	PAOZZ	5305011951575	7X677	9437889	SCREW,MACHINE 1/4-20 X 1.00.....	2
4	PAOZZ	5310008094058	96906	MS27183-10	WASHER,FLAT 1/4.....	4
5	PFOZZ	5940011803655	13445	46211-03	TERMINAL,FEED THRU.....	1
6	PAOZZ	5310011857188	13445	85764	.NUT,PLAIN,HEXAGON 1/2-20.....	1
7	PAOZZ	5310011867066	13445	85031	.WASHER,LOCK 1/2.....	1
8	PAOZZ	5310011857208	13445	88587	.WASHER,FLAT 1/2.....	1
9	PAOZZ	5310011866930	13445	83320	.NUT.....	1
* 10	MOOOO		34623	5578875	CABLE ASSEMBLY MAKE FROM WIRE,P/N M13486/1-14, 25 INCHES LONG.....	1
11	PAOZZ	5940007355520	56501	TG33	.TERMINAL,LUG.....	1
* 12	PAOZZ	5970008276566	06090	CRN1RED	.INSULATION SLEEVING.....	2
13	PAOZZ	9905008933570	81349	M43436/1-3	.BAND,MARKER.....	1
14	PAOZZ	5940001155006	96906	MS25036-133	.TERMINAL,LUG.....	1
15	PAOZZ	5940005496581	58536	A52425-1	ADAPTER,BATTERY TER.....	2
16	PAOZZ	5340013785201	19207	12342646	BOOT,DUST AND MOIST PART OF KIT P/N 5935425.....	3
* 16	PAOZZ	2530010894992	19207	12290948	BOOT,VEHICULAR COMP USE AS OPTIONAL REPLACEMENT FOR P/N 12342646.....	3
17	PAOZZ	5340013787525	19207	12342647	CAP,PROTECTIVE,DUST PART OF KIT P/N 5935425.....	3
18	PAOZZ	5940005496583	19207	7320533	ADAPTER,BATTERY TER.....	2
19	MOOOO		34623	5578876	CABLE ASSEMBLY MAKE FROM WIRE, P/N M13486/1-14, 13 INCHES LONG.....	1
20	PAOZZ	5940001155006	96906	MS25036-133	.TERMINAL,LUG.....	2
21	PAOZZ	5970002215301	14429	RESINITEEP69C	.INSULATION SLEEVING.....	2
22	PAOZZ	9905008933570	81349	M43436/1-3	.BAND,MARKER.....	1
23	PAOFF	6140014469498	19207	6TLMFTYI	BATTERY,STORAGE.....	2
24	MOOOO		34623	5578874	CABLE ASSEMBLY MAKE FROM WIRE, P/N M13486/1-14, 21 INCHES LONG.....	1
25	PAOZZ	5940001155006	96906	MS25036-133	.TERMINAL,LUG.....	2
26	PAOZZ	5970002215301	14429	RESINITEEP69C	.INSULATION SLEEVING.....	2
27	PAOZZ	9905008933570	81349	M43436/1-3	.BAND,MARKER.....	1
28	PAOZZ	6625011927498	19207	12340570	SHUNT,INSTRUMENT.....	1
29	PAOZZ	5310001848971	96906	MS35338-103	.WASHER,LOCK 3/8.....	1
30	PAOZZ	5305002062508	80205	MS35215-53	.SCREW,MACHINE #10-32 X .375.....	2
31	PAOZZ	5310002618278	96906	MS35338-100	.WASHER,LOCK #10.....	2
32	PAOZZ	5310000455207	96906	MS15795-908	.WASHER,FLAT #10.....	2
33	PAOZZ	5305013158649	19207	12342338	SCREW,CAP,HEXAGON H 1/2 X 3.00.....	1
34	PAOZZ	5310011520598	24617	271172	NUT,SELF-LOCKING,HE 1/4-20.....	2

END OF FIGURE

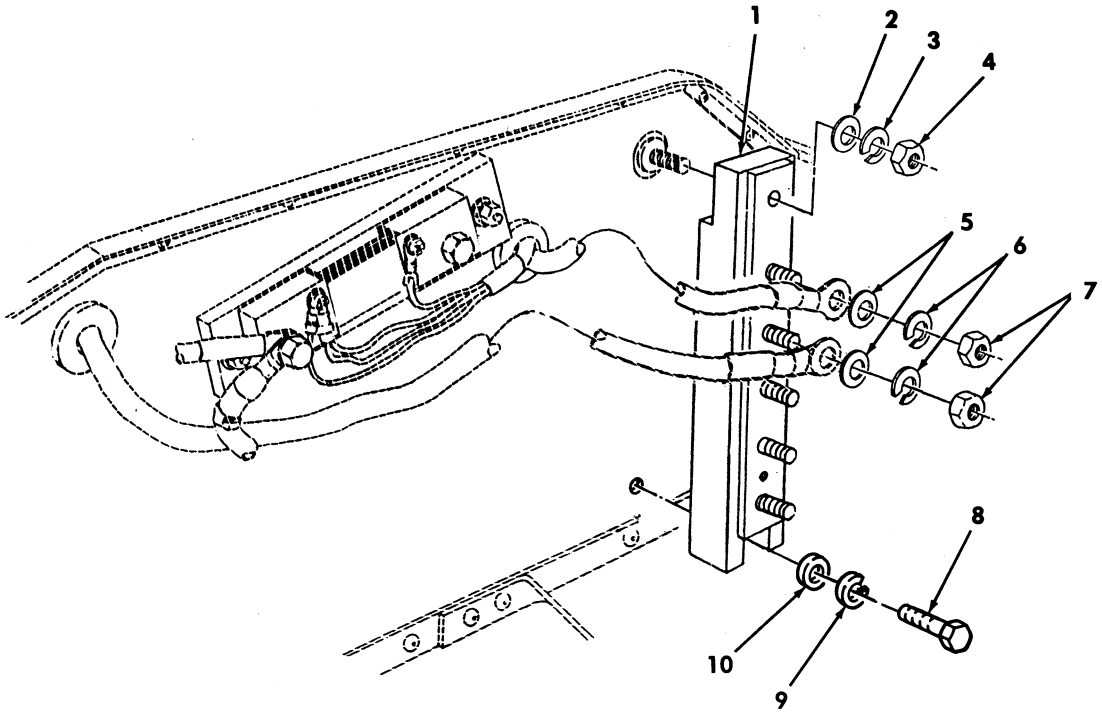

Figure 67. Buss Bar and Mounting Hardware.

(1) ITEM NO	(2) SMR CODE	(3) NSN	(4) CAGEC	(5) PART NUMBER	(6) DESCRIPTION AND USABLE ON CODES(UOC)	(7) QTY
					GROUP 0612 BATTERIES,STORAGE	
					FIG. 67 BUSS BAR AND MOUNTING HARDWARE	
1	PAOZZ	6150014137946	19207	12460070	BUS,CONDUCTOR.....	1
2	PAOZZ	5310011857208	13445	88587	WASHER,FLAT 1/2.....	1
3	PAOZZ	5310011867066	13445	85031	WASHER,LOCK 1/2.....	1
4	PAOZZ	5310011857188	13445	85764	NUT,PLAIN,HEXAGON 1/2-20.....	1
5	PAOZZ	5310000455218	96906	MS15795-918	WASHER,FLAT 1/2.....	5
6	PAOZZ	5310000116121	96906	MS35338-67	WASHER,LOCK 1/2.....	5
7	PAOZZ	5310009135474	96906	MS51969-5	NUT,PLAIN,HEXAGON 1/2-13.....	5
8	PAOZZ	5305000680502	96906	MS90725-6	SCREW,CAP,HEXAGON H 1/4-20 X 5/8...	1
9	PAOZZ	5310006379541	96906	MS35338-46	WASHER,LOCK 1/4.....	1
10	PAOZZ	5310008094058	96906	MS27183-10	WASHER,FLAT 1/4.....	1

END OF FIGURE

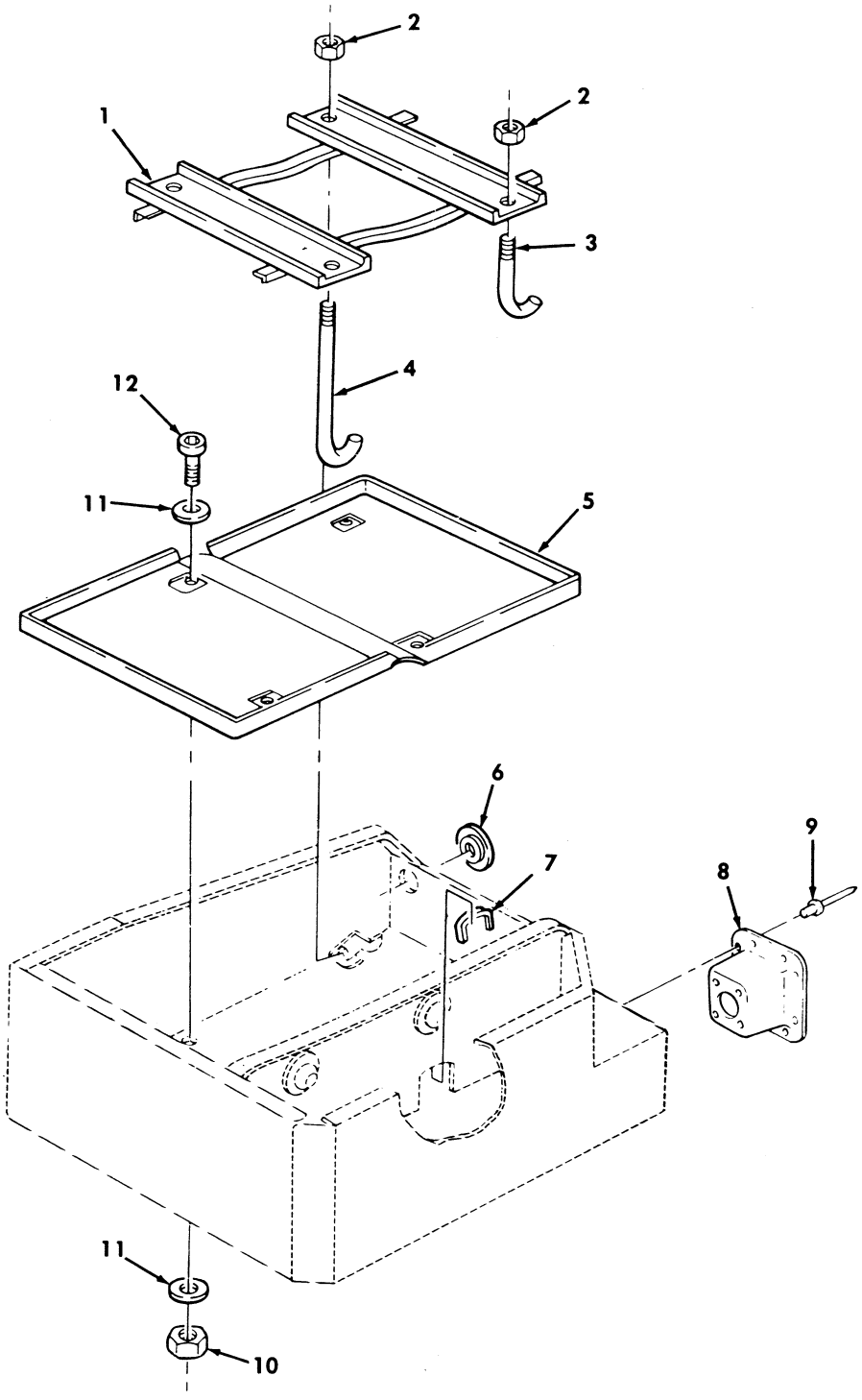

Figure 68. Battery Mounting Components and Related Parts.

(1) ITEM NO	(2) SMR CODE	(3) NSN	(4) CAGEC	(5) PART NUMBER	(6) DESCRIPTION AND USABLE ON CODES(UOC)	(7) QTY
					GROUP 0612 BATTERIES,STORAGE	
					FIG. 68 BATTERY MOUNTING COMPONENTS AND RELATED PARTS	
1	PFOZZ	5340014140701	19200	12446824	RETAINER,BATTERY.....	1
2	PAOZZ	5310008807744	96906	MS51967-5	NUT,PLAIN,HEXAGON 5/16-18.....	4
3	PAOZZ	5306011857071	34623	5596271	BOLT,HOOK.....	2
4	PAOZZ	5306011902193	19207	12339013	BOLT,HOOK.....	2
5	PFOZZ	6160011840728	19207	12339035	TRAY,BATTERY.....	1
6	PAOZZ	5325011958002	70485	963	GROMMET,NONMETALLIC.....	1
7	MOOZZ		34623	SF5575898	EDGE PROTECTOR MAKE FROM GROMMET, P/N MS21266-2N, 4.5 INCHES LONG.....	1
8	PAOZZ	5340012824853	19207	12339017	MOUNT,RESILIENT.....	1
9	PAOZZ	5320012716357	9K475	MGLP-B6-4	RIVET,BLIND 3/16 X .270 GRIP.....	8
10	PAOZZ	5310000614650	96906	MS51943-31	NUT,SELF-LOCKING,HE 1/4-20.....	4
11	PAOZZ	5310008093078	96906	MS27183-11	WASHER,FLAT 1/4.....	8
12	PAOZZ	5305010165469	72582	186676	SCREW,CAP,HEXAGON H 1/4-20 X 5/8...	4

END OF FIGURE

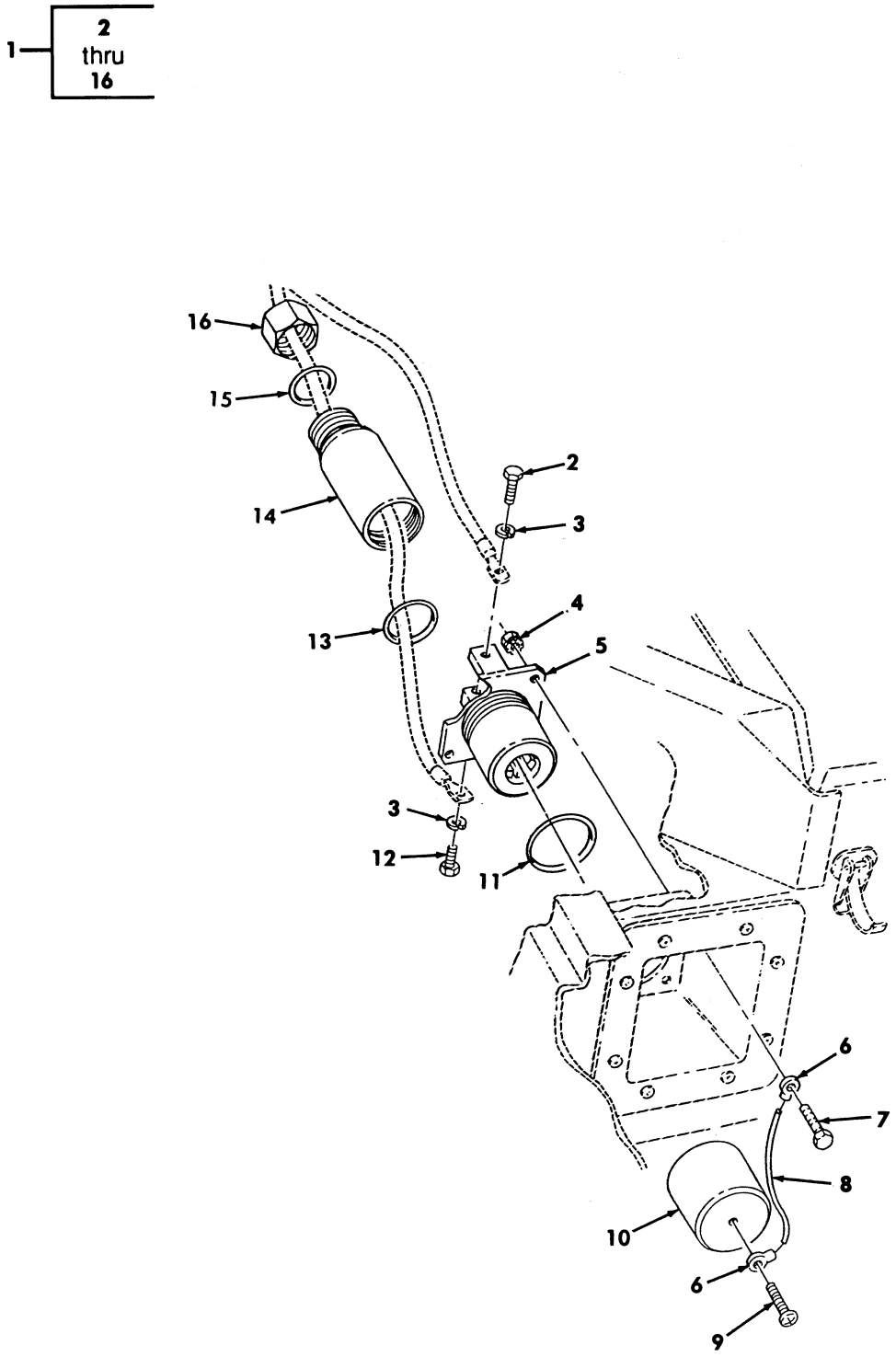

Figure 69. Slave Receptacle and Cable Assemblies.

(1) ITEM NO	(2) SMR CODE	(3) NSN	(4) CAGEC	(5) PART NUMBER	(6) DESCRIPTION AND USABLE ON CODES(UOC)	(7) QTY
					GROUP 0612 BATTERIES,STORAGE	
					FIG. 69 SLAVE RECEPTACLE AND CABLE ASSEMBLIES	
1	PAOZZ	5935013842610	19207	12342917	CONNECTOR ASSEMBLY,.....	1
2	PAOZZ	5305004780273	96906	MS35307-355	.SCREW,CAP,HEXAGON H.....	1
3	PAOZZ	5310009847042	96906	MS35338-141	.WASHER,LOCK.....	2
4	PAOZZ	5310012041039	7X677	272474	.NUT,PLAIN,ASSEMBLED.....	4
5	PAOZZ	5935013973813	19207	12342920	.CONNECTOR,RECEPTACL.....	1
6	PAOZZ	5940001434794	96906	MS25036-112	.TERMINAL,LUG.....	2
7	PAOZZ	5305011879555	7X677	9415786	.SCREW,CAP,HEXAGON H.....	4
8	MOOZZ		81755	P5006-4G-9	.CORD,FIBROUS SLAVE MAKE FROM CORD FIBROUS, P/N P5006-4G, 9 INCHES LONG	1
9	PAOZZ	5305009846192	96906	MS35206-244	.SCREW,MACHINE #8-32 X 11.125.....	1
10	PAOZZ	5340013157223	19207	12342306	.CAP,PROTECTIVE,DUST.....	1
11	PAOZZ	5331013921793	81349	M83461/1-030	.O-RING.....	1
12	PAOZZ	5305006559711	96906	MS35307-357	.SCREW,CAP,HEXAGON H.....	1
13	PAOZZ	5331010976619	81349	M83461/1-125	.O-RING.....	1
14	PAOZZ	5935013963991	19207	12342924	.BACKSHELL,DUMMY CON.....	1
15	PAOZZ	5331013920830	81349	M83461/1-208	.O-RING.....	1
16	PAOZZ	5310014069129	19207	12342925	.NUT,PLAIN,HEXAGON.....	1

END OF FIGURE

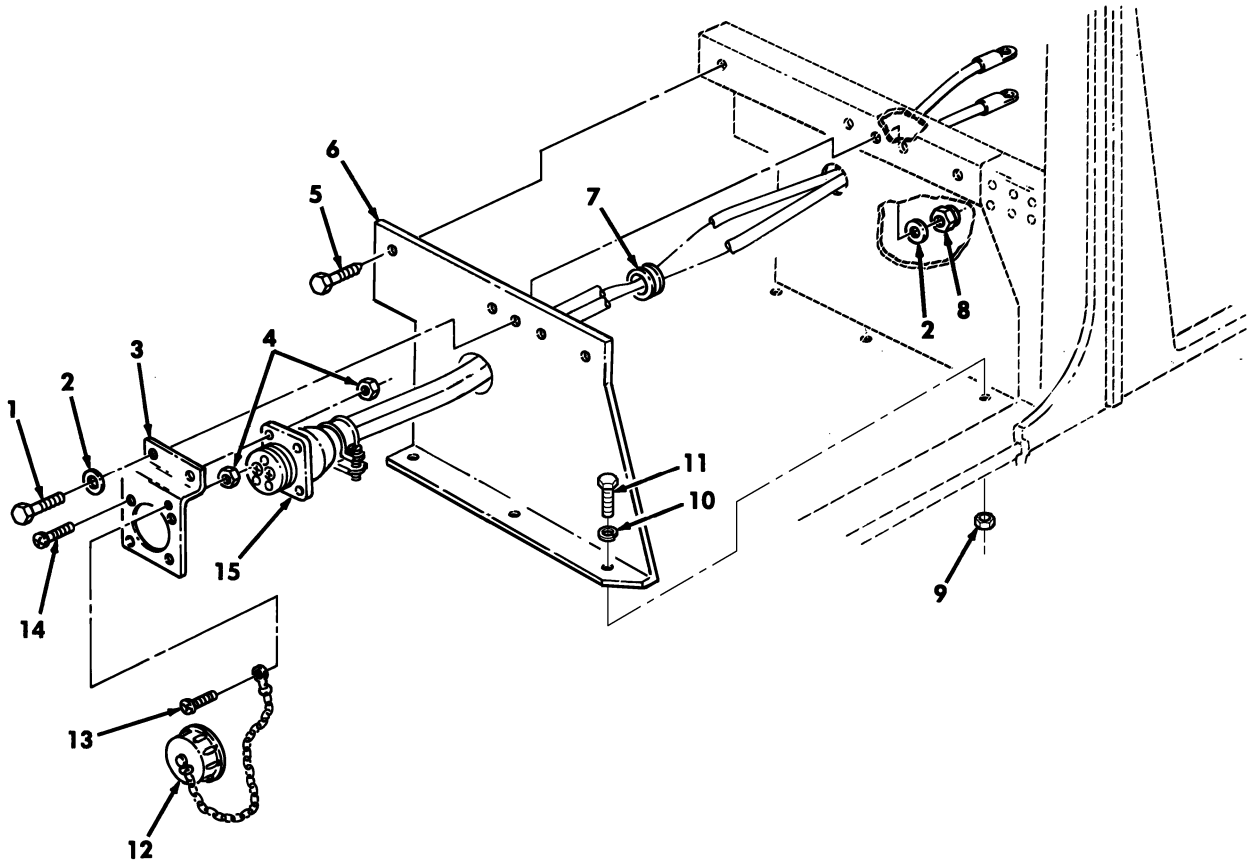

Figure 70. 200 AMP Umbilical Power Cable.

(1) ITEM NO	(2) SMR CODE	(3) NSN	(4) CAGEC	(5) PART NUMBER	(6) DESCRIPTION AND USABLE ON CODES(UOC)	(7) QTY
					GROUP 0612 GENERATOR,ALTERNATOR	
					FIG. 70 200 AMP UMBILICAL POWER POWER CABLE	
1	PAOZZ	5306002258499	96906	MS90725-34	BOLT,MACHINE 5/16-18 X 1.00.....	2
2	PAOZZ	5310000814219	96906	MS27183-12	WASHER,FLAT 5/16.....	4
3	PFOZZ	5340013586697	19207	12342658	BRACKET,DOUBLE ANGL.....	1
4	PAOZZ	5310010685243	72582	271163	NUT,PLAIN ASSEMBLED #8-32.....	5
* 5	PAOZZ	5305010065736	02126	DR-T10X3/4	SCREW,TAPPING.....	3
* 6	PAOZZ	2510013835444	19207	12339036-1	PANEL,BODY VEHICULA.....	1
* 7	PAOZZ	5325012897859	28520	2400	GROMMET,NONMETALLIC.....	2
* 8	PAOZZ	5310008140673	96906	MS51943-33	NUT,SELF-LOCKING 5/16-18.....	2
* 9	PAOZZ	5310009349758	96906	MS35648-202	NUT,PLAIN HEXAGON.....	3
* 10	PAOZZ	5310004079566	96906	MS35338-45	WASHER,LOCK.....	3
* 11	PAOZZ	5305004703321	96906	MS51849-74	SCREW,MACHINE.....	3
* 12	PAOZZ	5935012239420	96906	MS25043-32DA	COVER,ELECTRICAL CO.....	1
* 13	PAOZZ	5305013590167	24617	159612	SCREW,MACHINE #8-32 X .625.....	1
* 14	PAOZZ	5305010358766	80205	NAS387-832-12P	SCREW,MACHINE #8-32 X .750.....	4
* 15	PAOZZ	6150013618129	09647	07687-2	LEAD,ELECTRICAL.....	1

END OF FIGURE

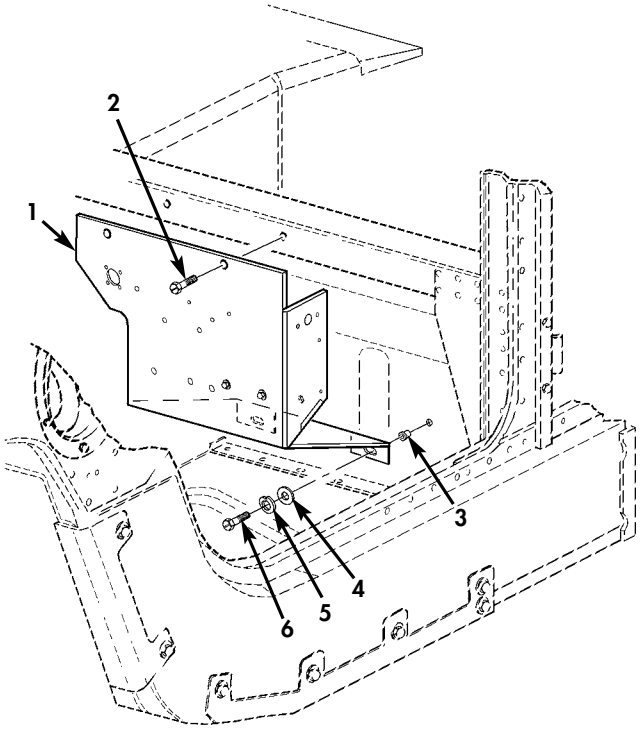

M1151/M1151A1/M1167

Figure 70A. Cab Enclosures (Sheet 1 of 2).

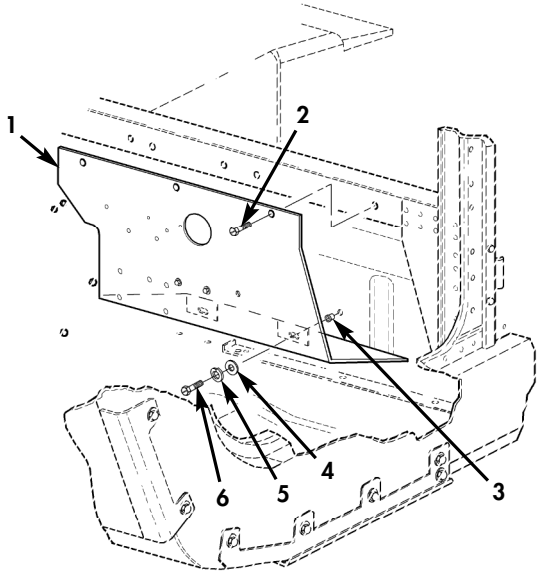

M1165/M1165A1

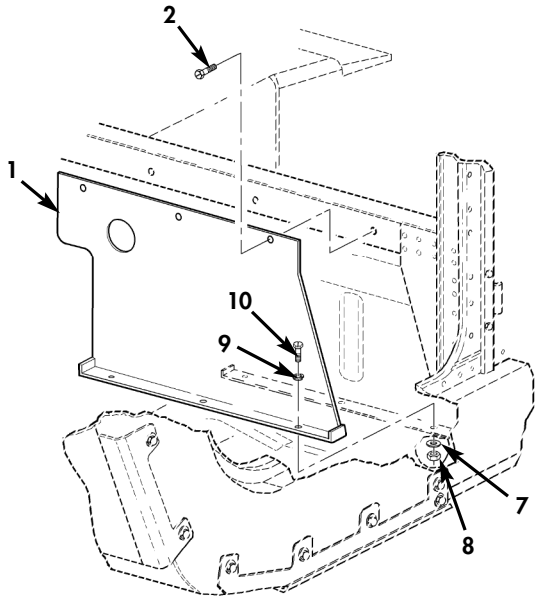

M1152/M1152A1

Figure 70A. Cab Enclosures (Sheet 2 of 2).

(1) ITEM NO	(2) SMR CODE	(3) NSN	(4) CAGEC	(5) PART NUMBER	(6) DESCRIPTION AND USABLE ON CODES(UOC)	(7) QTY
					GROUP 0612 BATTERIES,STORAGE	
					FIG. 70A CAB ENCLOSURES	
* 1	XDOZZ		34623	6022835	PANEL,ELECTRICAL R.H..... UOC:TTA,TTT,TT1	1
* 1	XDOZZ		34623	6022836	PANEL,ELECTRICAL R.H.,FOUR MAN..... UOC:UU1,UU2	1
* 1	XDOZZ		34623	6022837	PANEL,ELECTRICAL R.H.,TWO MAN..... UOC:UUA,UUU	1
* 2	PAOZZ	5305010065736	19207	12342499-3	SCREW,TAPPING UOC:TTA,TTT,TT1,UUA,UUU,UU1,UU2	2
* 3	PAOZZ	5325013951247	78276	ALS4-420-260	INSERT,SCREW THREAD..... UOC:TTA,TTT,TT1,UU1,UU2	2
* 4	PAOZZ	5310013330060	96906	MS51412-23	WASHER,FLAT 1/4..... UOC:TTA,TTT,TT1,UU1,UU2	2
* 5	PAOZZ	5310005825965	80205	MS35338-44	WASHER,LOCK 1/4..... UOC:TTA,TTT,TT1,UU1,UU2	2
* 6	PAOZZ	5305000680508	80204	B1821BH025C075N	SCREW,CAP,HEXAGON H..... UOC:TTA,TTT,TT1,UU1,UU2	2
* 7	PAOZZ	5310012349416	96906	MS51412-2	WASHER,FLAT #10..... UOC:UUA,UUU	3
* 8	PAOZZ	5310009349758	80205	MS35649-202	NUT,PLAIN,HEXAGON 1/4-20..... UOC:UUA,UUU	3
* 9	PAOZZ	5310000453296	80205	MS35338-43	WASHER,LOCK #10..... UOC:UUA,UUU	3
* 10	PAOZZ	5305010065736	19207	12342499-3	SCREW,TAPPING ..... UOC:UUA,UUU	3

END OF FIGURE

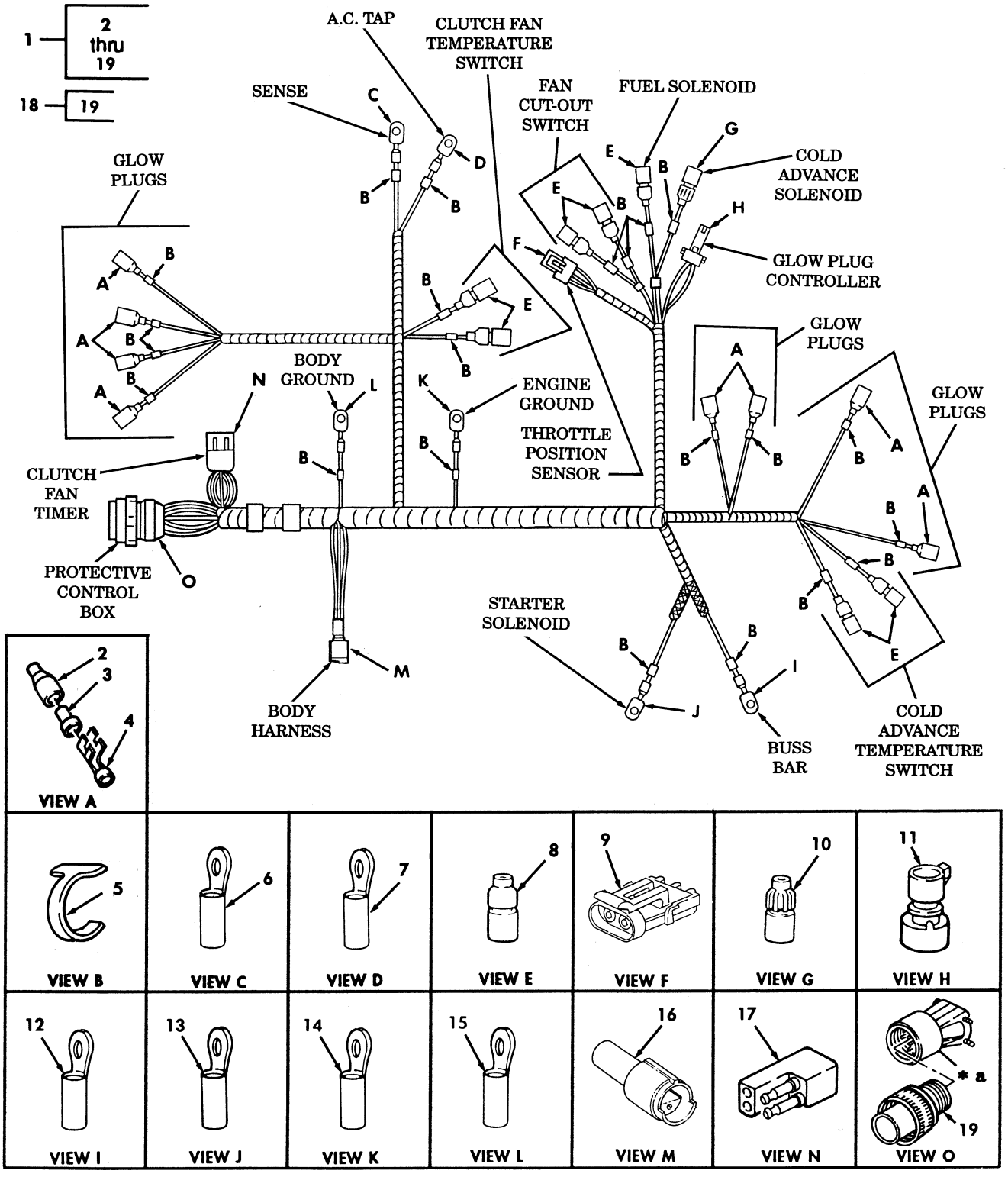

* a PART OF ITEM 18

Figure 71. Engine Wiring Harness.

(1) ITEM NO	(2) SMR CODE	(3) NSN	(4) CAGEC	(5) PART NUMBER	(6) DESCRIPTION AND USABLE ON CODES(UOC)	(7) QTY
					GROUP 0613 HULL OR CHASSIS WIRING HARNESS	
					FIG. 71 ENGINE WIRING HARNESS	
* 1	PFFFF	6150014331568	34623	12469287	WIRING HARNESS.....	1
2	PAOZZ	5975012071706	19207	12339334	.CABLE NIPPLE,ELECTR.....	8
3	PAOZZ	5970008338562	19207	8338562	.INSULATOR,BUSHING.....	8
4	PAOZZ	5940003996676	19207	8338564	.TERMINAL SET,QUICK.....	8
5	PAFZZ	9905010138723	81349	M43436/3-1	.BAND,MARKER.....	22
6	PAOZZ	5940007056709	56501	TG9	.TERMINAL,LUG.....	1
7	PAOZZ	5940001071481	96906	MS20659-104	.TERMINAL,LUG.....	1
8	PAOZA	5935001677775	96906	MS27144-1	.CONNECTOR,PLUG,ELEC.....	7
9	PAOZZ	5935014129146	19207	12460132	.CONNECTOR,PLUG,ELEC.....	1
10	PAOZA	5935001846707	96906	MS27144-3	.CONNECTOR,PLUG,ELEC.....	1
11	PAOZZ	5935012168763	34623	5903101	.SOCKET,PLUG-IN ELEC.....	1
12	PAOZZ	5940001141315	96906	MS20659-142	.TERMINAL,LUG.....	1
13	PAOZZ	5940007056708	56501	TG8	.TERMINAL,LUG.....	1
14	PAOZZ	5940007056715	56501	TG15	.TERMINAL,LUG.....	1
15	PAOZZ	5940007056703	56501	TG3	.TERMINAL,LUG.....	1
16	PAOZZ	5935011539320	71468	120-1805-000	.CONNECTOR,PLUG,ELEC.....	1
17	PAOZZ	5935014154392	19207	12342712	.INSERT,ELECTRICAL C.....	1
18	PAOZZ	5935014154322	19207	12342654	.CONNECTOR,PLUG,ELEC.....	1
19	PAOZZ	5310014155245	19207	12342864	..NUT,PLAIN,ROUND.....	1

END OF FIGURE

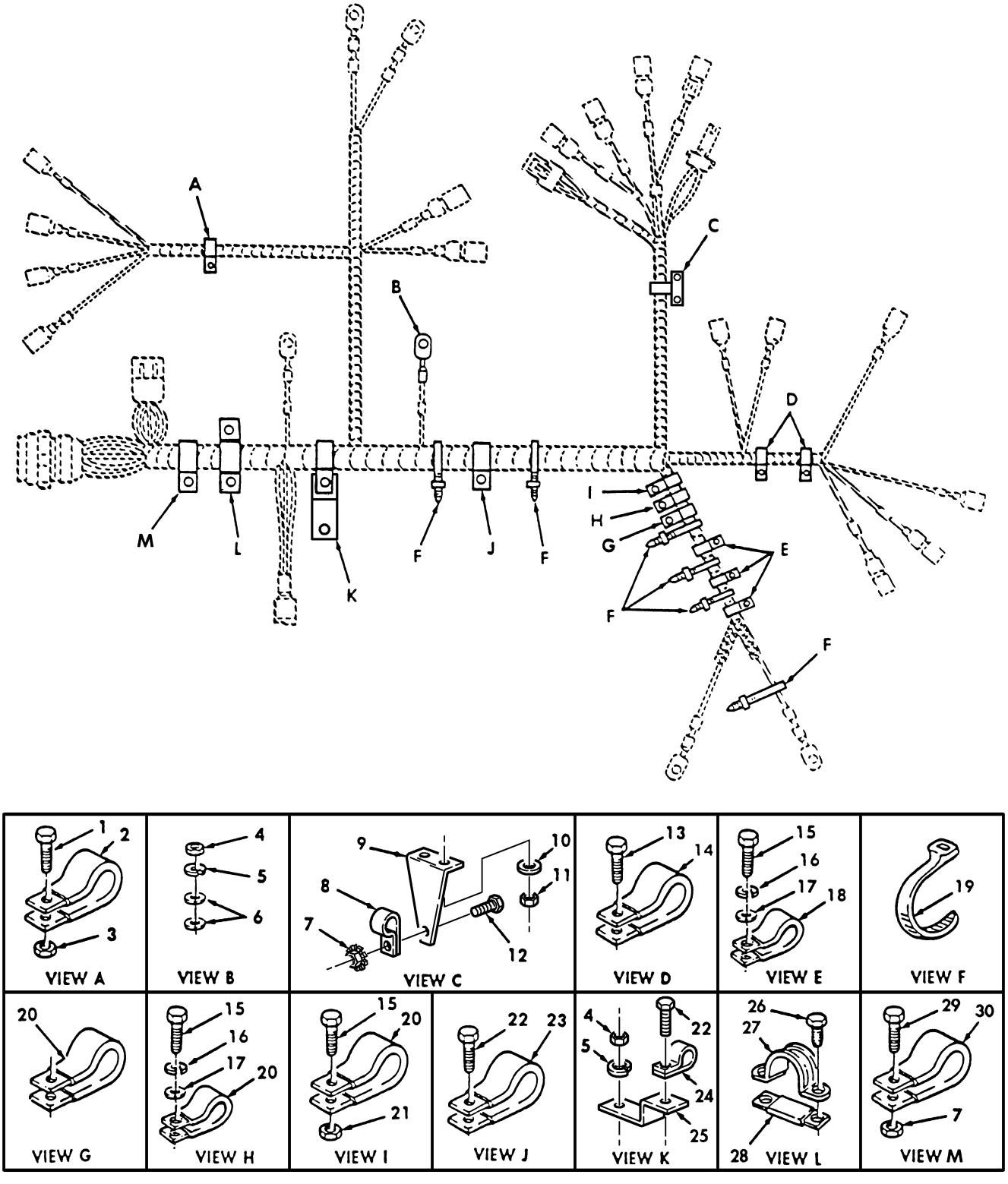

Figure 72. Engine Wiring Harness Installation Hardware.

(1) ITEM NO	(2) SMR CODE	(3) NSN	(4) CAGEC	(5) PART NUMBER	(6) DESCRIPTION AND USABLE ON CODES(UOC)	(7) QTY
					GROUP 0613 HULL OR CHASSIS WIRING HARNESS	
					FIG. 72 ENGINE WIRING HARNESS INSTALLATION HARDWARE	
1	PAFZZ	5305005829501	82386	410-63	SCREW,CAP,HEXAGON H #10-32 X 1/2...	1
2	PAFZZ	5340007647051	96906	MS21333-69	CLAMP,LOOP.....	1
3	PAFZZ	5310001249265	72582	271169	NUT,PLAIN,ASSEMBLED.....	1
4	PAFZZ	5310013663539	80204	B18241B100F	NUT,PLAIN,HEXAGON.....	2
5	PAFZZ	5310012067306	7X677	11500207	WASHER,LOCK 1/4.....	2
* 6	PAFZZ	5310012101587	07860	d21059-16	WASHER,FLAT 10MM.....	2
7	PAFZZ	5310011520598	24617	271172	NUT,SELF-LOCKING,AS 1/4-20.....	2
8	PAFZZ	5340008091494	96906	MS21333-105	CLAMP,LOOP.....	1
9	PFFZZ	5340012097387	19207	12339333	BRACKET,ANGLE.....	1
10	PAFZZ	5310014443084	24617	11503962	WASHER,LOCK 6MM.....	2
* 11	PAFZZ	5310011553857	56161	10501762	NUT,PLAIN HEXAGON 6MM.....	2
12	PAFZZ	5305000680508	80204	B1821BH025C075N	SCREW,TAPPING V4-20 3/4.....	1
13	PAFZZ	5305012155174	19207	12340515	SCREW,ASSEMBLED WAS 4.2-1.41 X 13MM	2
14	PAFZZ	5340000572904	96906	MS21333-71	CLAMP,LOOP.....	2
15	PAFZZ	5305005434372	80204	B1821BH038C075N	SCREW,CAP,HEXAGON H 3/8-24 X 3/4...	5
16	PAFZZ	5310006379541	96906	MS35338-46	WASHER,LOCK 3/8.....	4
17	PAFZZ	5310012805796	96906	MS27183-57	WASHER,FLAT 3/8.....	4
18	PAFZZ	5340000538994	96906	MS21333-126	CLAMP,LOOP.....	3
19	PAFZZ	5975004515001	96906	MS3367-3-9	STRAP,TIEDOWN,ELECT.....	6
20	PAFZZ	5340001519651	96906	MS21333-129	CLAMP,LOOP.....	2
* 21	PAFZZ	5310008140672	96906	M45913/3-6FG8C	NUT,SELF-LOCKING,HE 3/8-24.....	1
22	PAFZZ	5305004890743	24617	9415477	SCREW,MACHINE 1/4-20 X 3/4.....	1
23	PAFZZ	5340009226302	96906	MS21333-81	CLAMP,LOOP.....	1
24	PAFZZ	5340009588457	96906	MS21333-78	CLAMP,LOOP.....	1
25	PAFZZ	5340014324882	34623	RCSK17368-2	BRACKET,DOUBLE ANGLE.....	1
26	PAFZZ	5305012068401	7X677	448655	SCREW,TAPPING 1/4-28 X 1/2.....	2
27	PFFZZ	5340012134667	19207	12340663-1	STRAP,RETAINING.....	1
28	PAFZZ	5342012055381	19207	12340664	STRAP.....	1
29	PAFZZ		24617	9415477	BOLT.....	1
30	PAFZZ	5340008091500	96906	MS21333-107	CLAMP.....	1

END OF FIGURE

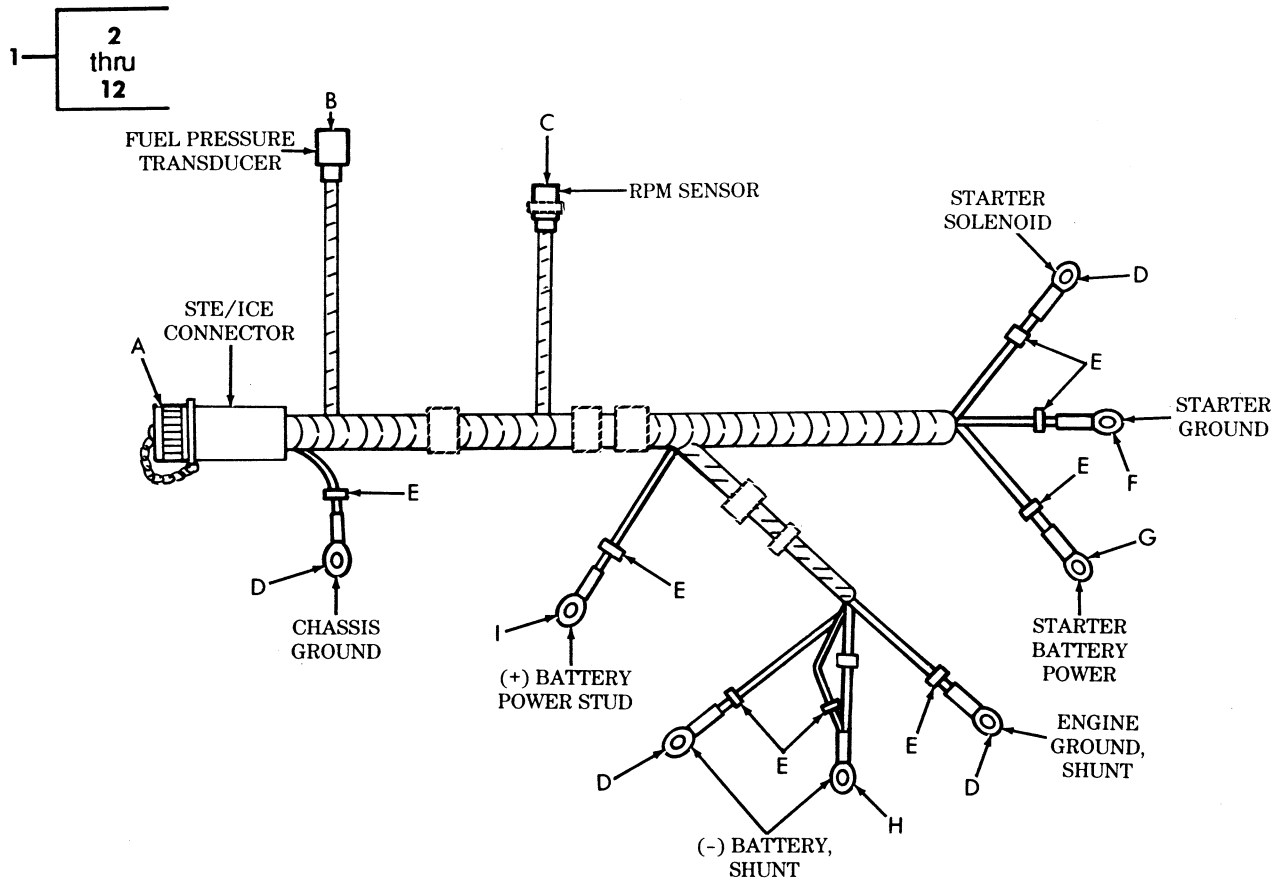

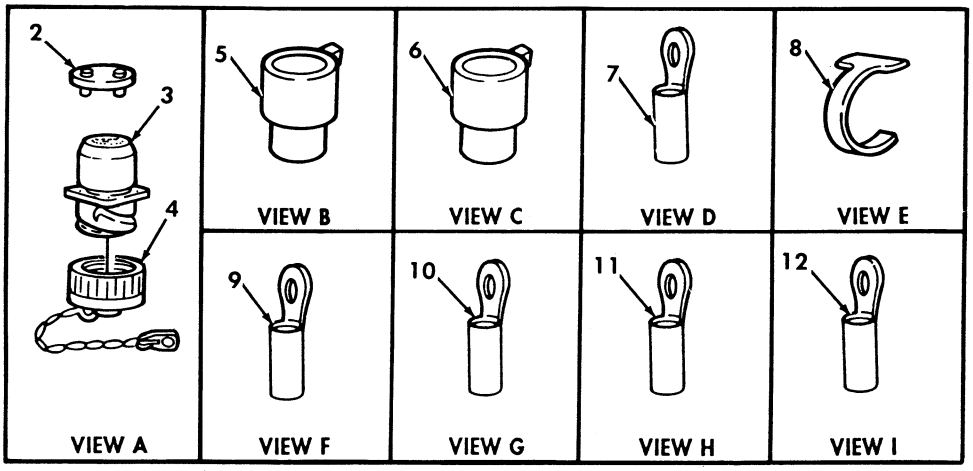

Figure 73. STE/ICE Wiring Harness.

(1) ITEM NO	(2) SMR CODE	(3) NSN	(4) CAGEC	(5) PART NUMBER	(6) DESCRIPTION AND USABLE ON CODES(UOC)	(7) QTY
					GROUP 0613 HULL OR CHASSIS WIRING HARNESS	
					FIG. 73 STE/ICE WIRING HARNESS	
1	PAFFF	5995011842228	19207	12340253	WIRING HARNESS,BRAN STE/ICE.....	1
2	XAFZZ		19207	5578215	.PRINTED CIRCUIT BOA.....	1
3	PAFZA	5935012095594	34623	5578306-B	.CONNECTOR,RECEPTACL.....	1
4	PAFZZ	5340011580098	34623	5995301	.CAP,PROTECTIVE,DUST.....	1
5	PAFZZ	5935011546233	08718	SS4R-120-1806-00 0	.CONNECTOR,PLUG,ELEC.....	1
6	PAFZZ	5935011495165	08718	SS2R-120-1804-00 0	.CONNECTOR BODY,PLUG.....	1
7	PAOZZ	5940009834067	16528	7728777	.TERMINAL,LUG.....	4
8	PAOZZ	9905010138723	81349	M43436/3-1	.BAND,MARKER.....	8
9	PAOZZ	5940010354212	19207	7728780	.TERMINAL,LUG.....	1
10	PAOZZ	5940012144563	28891	101450-S02	.TERMINAL,LUG.....	1
11	PAOZZ	5940000507106	55026	1-112757	.TERMINAL,LUG.....	1
12	PAOZZ	5940000200072	96906	MS35436-16	.TERMINAL,LUG.....	1

END OF FIGURE

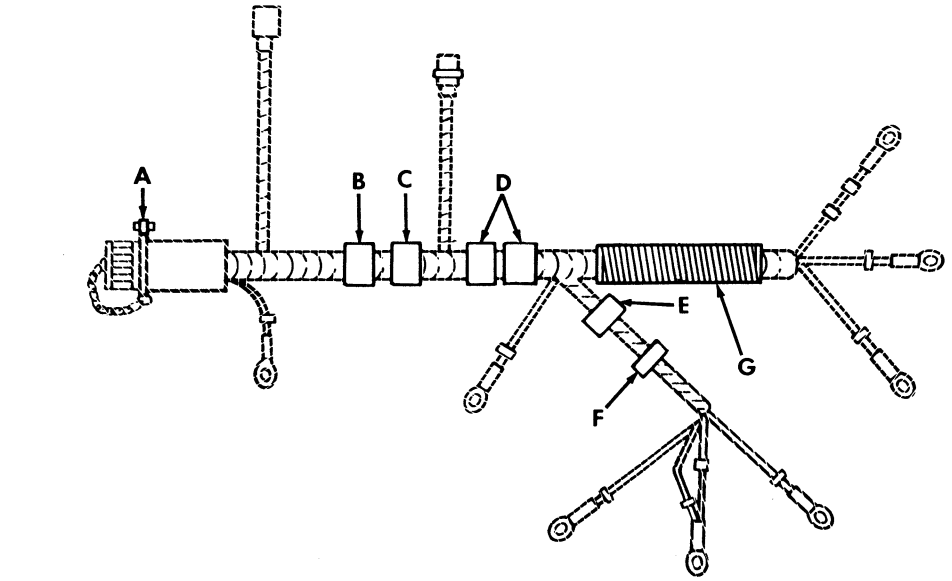

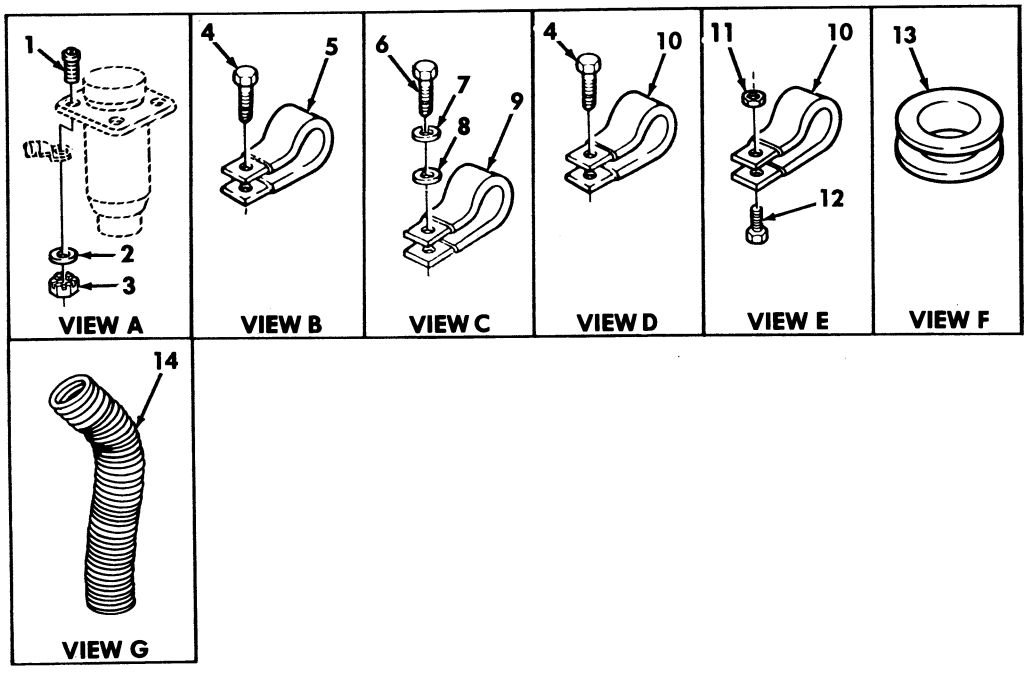

Figure 74. STE/ICE Wiring Harness Mounting Hardware.

(1) ITEM NO	(2) SMR CODE	(3) NSN	(4) CAGEC	(5) PART NUMBER	(6) DESCRIPTION AND USABLE ON CODES(UOC)	(7) QTY
					GROUP 0613 HULL OR CHASSIS WIRING HARNESS	
					FIG. 74 STE/ICE WIRING HARNESS MOUNTING HARDWARE	
1	PAOZZ	5305009844992	96906	MS35206-232	SCREW,MACHINE #6-32 X 3/4.....	4
* 2	PAOZZ	5310010626864	80205	MS15795-841	WASHER,FLAT #6.....	4
3	PAOZZ	5310011867702	11862	134530	NUT,PLAIN,ASSEMBLED #6-32.....	4
4	PAFZZ	5305012596322	34623	12342499-1	SCREW,MACHINE #10-32 X 1/2.....	3
5	PAFZZ	5340000913790	96906	MS21333-72	CLAMP,LOOP.....	1
* 6	PAFZZ	5305002693234	80204	B1821BH038F075N	SCREW,CAP HEXAGON H.....	1
* 7	PAFZZ	5310000120382	24617	120382	WASHER,LOCK 3/8.....	1
* 8	PAOZZ	5310012805796	96906	MS27183-57	WASHER,FLAT.....	1
* 9	PAFZZ	5340008338476	96906	MS21333-122	CLAMP,LOOP.....	1
* 10	PAFZZ	5340000572904	96906	MS21333-71	CLAMP,LOOP.....	3
11	PAFZZ	5310001249265	72582	271169	NUT,PLAIN,ASSEMBLED #10-32.....	1
12	PAFZZ	5305009931848	96906	MS35207-265	SCREW,MACHINE #10-32 X 3/4.....	1
13	PAFZZ	5325002636651	59875	TD97203	GROMMET,NONMETALLIC.....	1
14	PAOZZ	5975014841150	19207	12339331	SHIELD,CABLE.....	1

END OF FIGURE

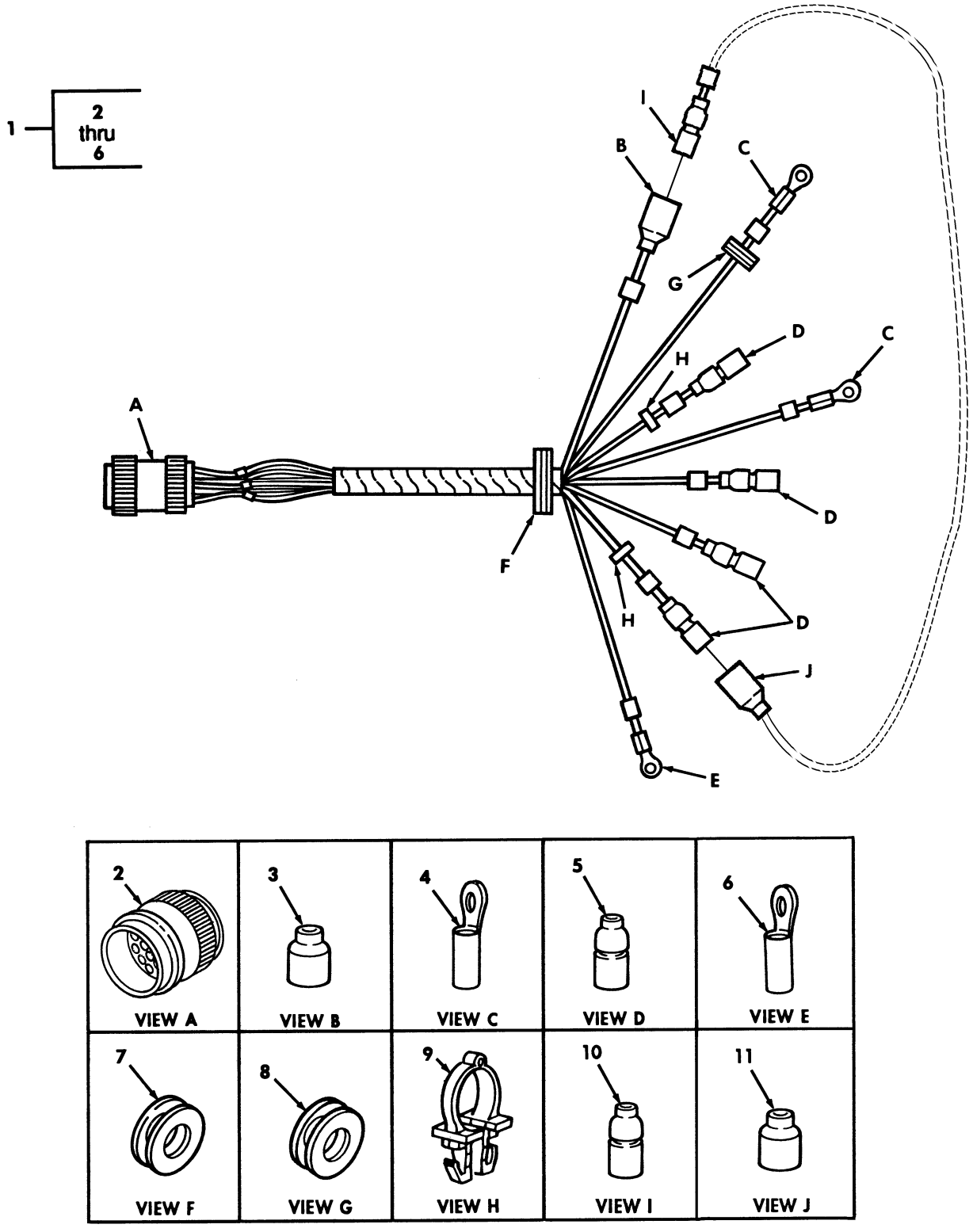

Figure 75. Hood Wiring Harness.

(1) ITEM NO	(2) SMR CODE	(3) NSN	(4) CAGEC	(5) PART NUMBER	(6) DESCRIPTION AND USABLE ON CODES(UOC)	(7) QTY
					GROUP 0613 HULL OR CHASIS WIRING	
					FIG. 75 HOOD WIRING HARNESS	
* 1	PFOFF	6150014328489	34623	12469143	LEAD ASSEMBLY,ELECT.....	2
2	PAOZZ	5935010506586	96906	MS3456W16S-1P	.CONNECTOR,PLUG,ELEC.....	1
3	PAOZZ	5935001152306	96906	MS27142-3	.CONNECTOR,PLUG,ELEC.....	1
4	PAOZZ	5940010354212	19207	7728780	.TERMINAL,LUG.....	2
5	PAOZA	5935001152307	96906	MS27144-2	.CONNECTOR,PLUG,ELEC.....	4
6	PAOZZ	5940009834067	16528	7728777	.TERMINAL,LUG.....	1
7	PAOZZ	5325001749332	96906	MS35849-48	GROMMET,NONMETALLIC.....	2
8	PAOZZ	5325002024005	96906	MS35849-110	GROMMET,NONMETALLIC.....	1
9	PAOZZ	5325012147817	34623	5588705	FASTENER,SPRING TEN.....	4
* 10	PAOZZ	5935002140904	19207	7982907	DUMMY CONNECTOR,PLUG R.H.....	1
* 11	PAOZZ	5935008338561	19207	8338561	SHELL,ELECTRICAL,CON R.H.....	1

END OF FIGURE

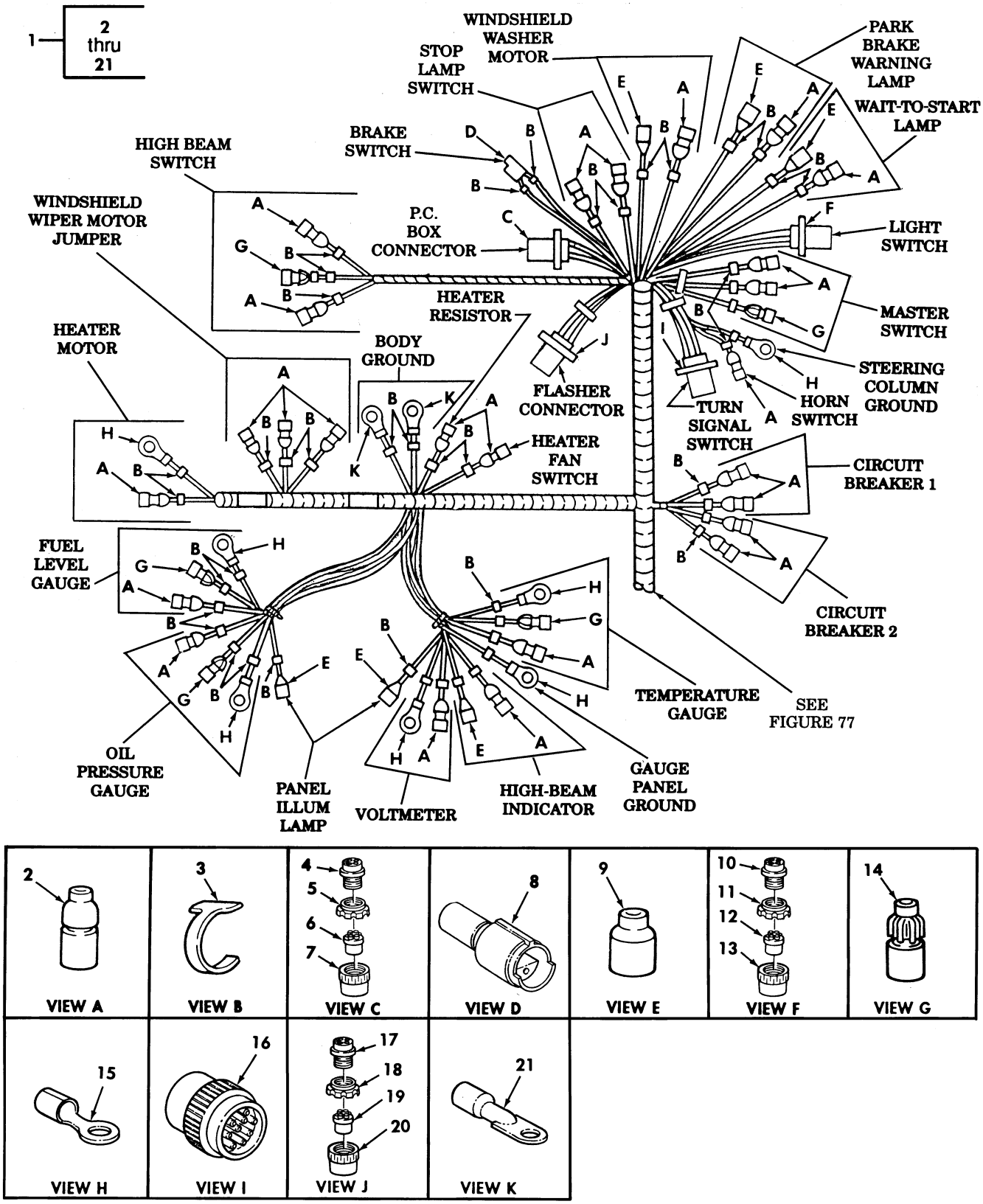

Figure 76. Body Wiring Harness-Partial View.

(1) ITEM NO	(2) SMR CODE	(3) NSN	(4) CAGEC	(5) PART NUMBER	(6) DESCRIPTION AND USABLE ON CODES(UOC)	(7) QTY
					GROUP 0613 HULL OR CHASSIS WIRING HARNESS	
					FIG. 76 BODY WIRING HARNESS-PARTIAL VIEW	
1	PFFFF	6150014323582	34623	EX4149	CABLE ASSEMBLY,SPEC.....	1
2	PAOZA	5935001677775	96906	MS27144-1	.CONNECTOR,PLUG,ELEC.....	25
3	PAOZZ	9905009457637	81349	M43436/1-4	.BAND,MARKER.....	47
4	PAFZZ	5935006143959	77820	10-042622-23S	.CONNECTOR,PLUG,ELEC.....	1
5	PAFZZ	5310006559860	19207	8701325	.NUT,SLEEVE.....	1
6	PAFZZ	5365007722322	19207	7722322	.BUSHING,NONMETALLIC.....	1
7	PAFZZ	5935003339414	19207	7723308	.NUT,BUSHING RETAINE.....	1
8	PAOZZ	5999011508808	45152	126488A	.CONTACT,ELECTRICAL.....	1
9	PAOZZ	5935004626603	96906	MS27142-2	.CONNECTOR,PLUG,ELEC.....	6
10	PAFZZ	5935006862599	19207	8724258	.CONNECTOR,PLUG,ELEC.....	1
11	PAFZZ	5975007716634	19207	7716634	.NUT,COUPLING,ELECTR.....	1
12	PAFZZ	5365000905426	19207	7722333	.BUSHING,NONMETALLIC.....	1
13	PAFZZ	5310003936685	19207	7723309	.NUT,PLAIN,KNURLED.....	1
14	PAOZA	5935001846707	96906	MS27144-3	.CONNECTOR,PLUG,ELEC.....	5
15	PAOZZ	5940007056708	56501	TG8	.TERMINAL,LUG.....	7
16	PAFZZ	5935011846417	19207	11668591	.CONNECTOR,PLUG,ELEC.....	1
17	PAFZZ	5935006059322	80064	1755683	.CONNECTOR,PLUG,ELEC.....	1
18	PAFZZ	5975006977769	19207	7527645	.NUT,COUPLING,ELECTR.....	1
19	PAFZZ	5935007722344	77820	10-40817-010	.INSERT,ELECTRICAL C.....	1
20	PAFZZ	5935007723307	19207	7723307	.NUT,BUSHING RETAINE.....	1
21	PAOZZ	5940007056709	56501	TG9	.TERMINAL,LUG.....	2

END OF FIGURE

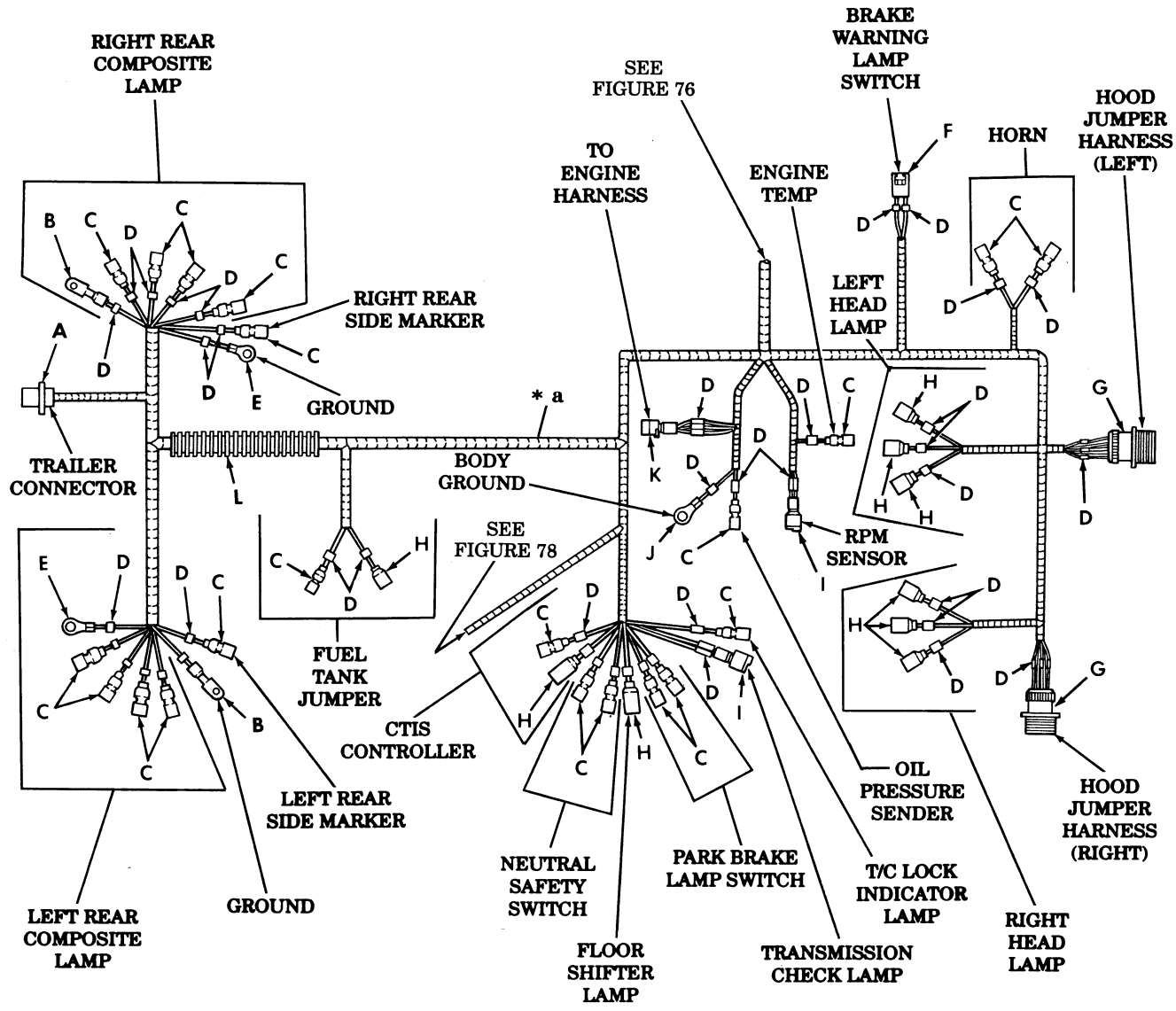

* a FOR HARNESS ASSEMBLY PART NUMBER, SEE FIGURE 76 ITEM 1

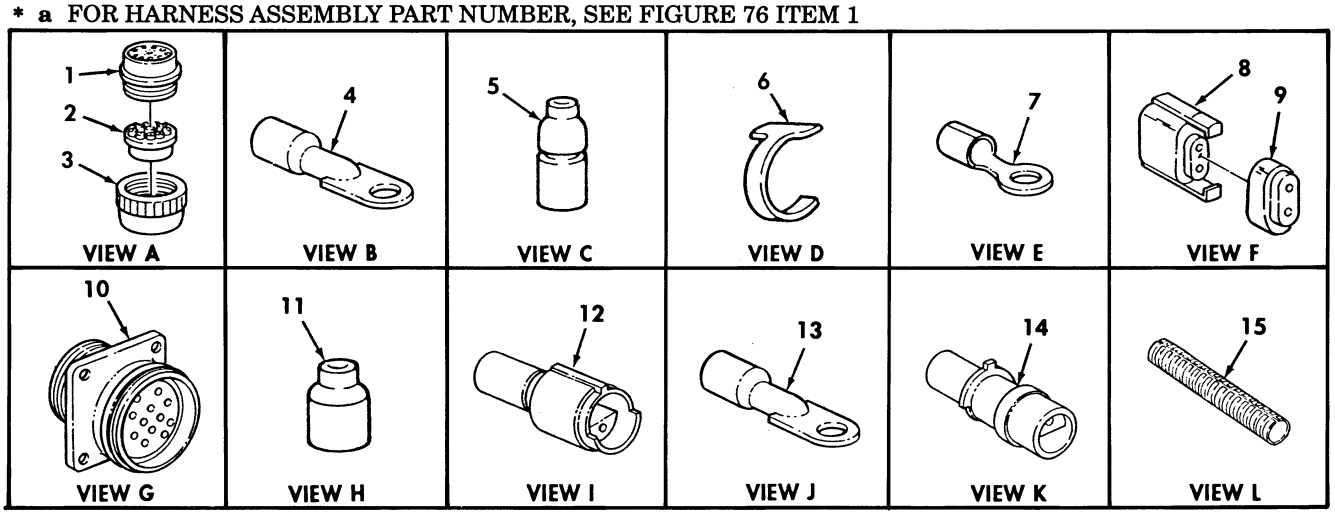

Figure 77. Body Wiring Harness-Partial View.

(1) ITEM NO	(2) SMR CODE	(3) NSN	(4) CAGEC	(5) PART NUMBER	(6) DESCRIPTION AND USABLE ON CODES(UOC)	(7) QTY
					GROUP 0613 HULL OR CHASSIS WIRING HARNESS	
					FIG. 77 BODY WIRING HARNESS-PARTIAL VIEW	
1	PAFZA	5935008463884	96906	MS75021-2	.CONNECTOR,RECEPTACL.....	1
2	PAFZZ	5365000905426	19207	7722333	.BUSHING,NONMETALLIC.....	1
3	PAFZZ	5310003936685	19207	7723309	.NUT,PLAIN,KNURLED.....	1
4	PAOZZ	5940007056711	56501	TG11	.TERMINAL,LUG.....	2
5	PAOZA	5935001677775	96906	MS27144-1	.CONNECTOR,PLUG,ELEC.....	21
6	PAFZZ	9905010138723	81349	M43436/3-1	.BAND,MARKER.....	31
7	PAOZZ	5940007056708	56501	TG8	.TERMINAL,LUG.....	2
8	PAOZZ	5935012380543	19207	12340362	.CONNECTOR,PLUG,ELEC.....	1
9	PAFZZ	5935014428569	19207	12460097-1	.CONNECTOR,MODULAR P.....	1
10	PAOZZ	5935011107065	96906	MS3450W16S-1S	.CONNECTOR,RECEPTACL.....	2
11	PAOZZ	5935004626603	96906	MS27142-2	.CONNECTOR,PLUG,ELEC.....	9
12	PAOZZ	5999011508808	45152	126488A	.CONTACT,ELECTRICAL.....	2
13	PAOZZ	5940007056703	56501	TG3	.TERMINAL,LUG.....	1
14	PAFZZ	5935011508322	11083	7N7782	.CONNECTOR BODY,PLUG.....	1
15	PAOZA	5975014611433	77060	R-68237	.CONDUIT,NONMETALLIC.....	1

END OF FIGURE

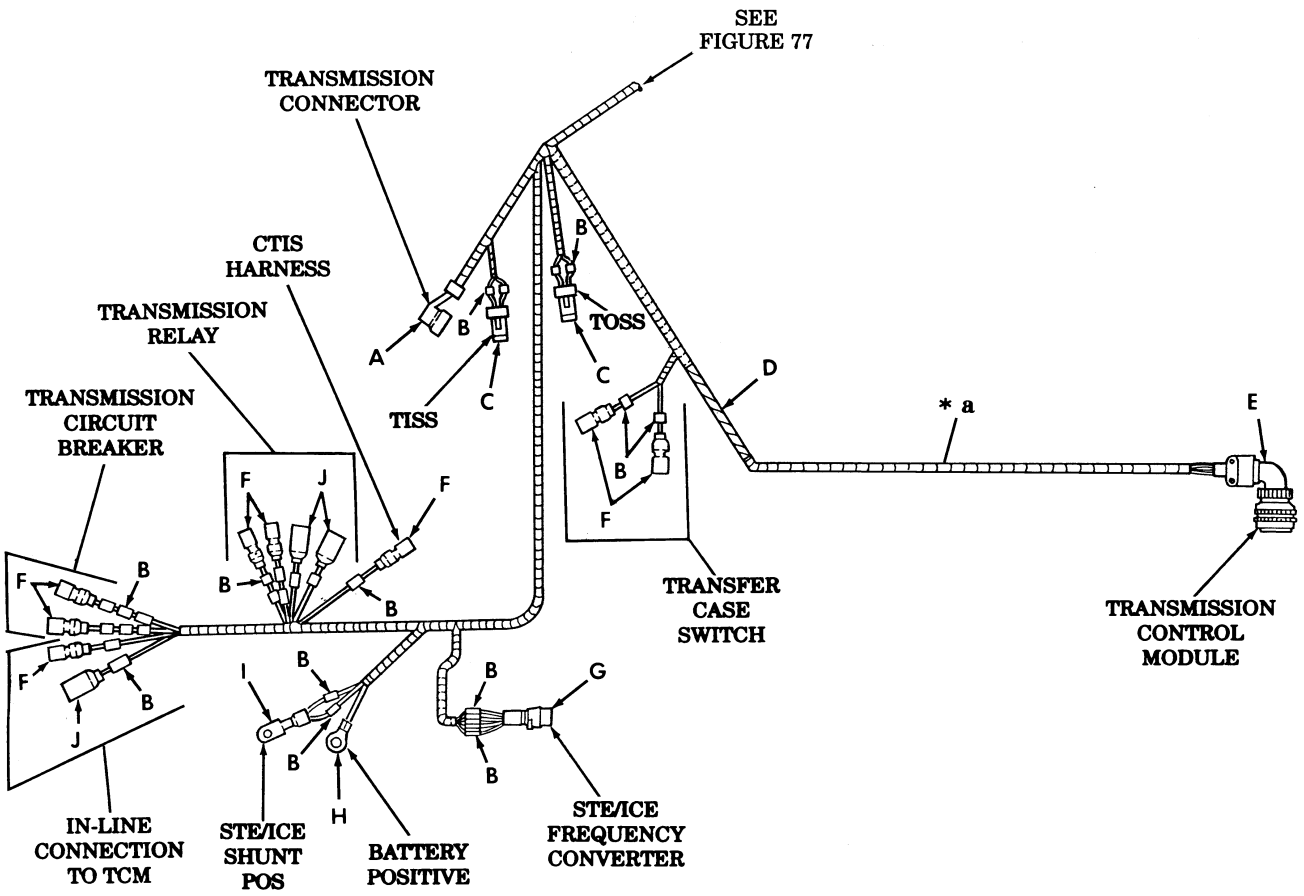

* a FOR HARNESS ASSEMBLY PART NUMBER, SEE FIGURE 76 ITEM 1

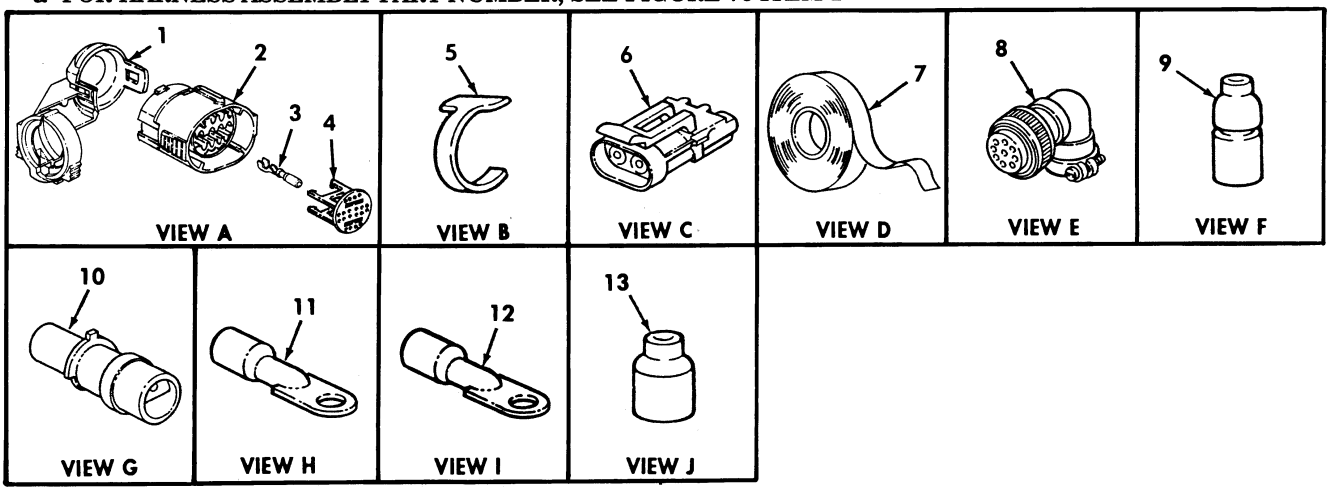

Figure 78. Body Wiring Harness-Partial View.

(1) ITEM NO	(2) SMR CODE	(3) NSN	(4) CAGEC	(5) PART NUMBER	(6) DESCRIPTION AND USABLE ON CODES(UOC)	(7) QTY
					GROUP 0613 HULL OR CHASSIS WIRING HARNESS	
					FIG. 78 BODY WIRING HARNESS-PARTIAL VIEW	
* 1	PAFZZ	5340014424876	19207	12460130	CLIP,SPRING TENSION.....	1
* 2	PAFZZ	5935014455599	77060	12160490	CONNECTOR,PLUG,ELEC.....	1
* 3	PAFZZ	5940014426298	77060	12084912	TERMINAL,LUG.....	1
* 4	PAFZZ	5935014455144	77060	12160494	INSERT,ELECTRICAL C.....	1
* 5	PAOZZ	9905010138723	81349	M43436/3-1	BAND,MARKER.....	11
* 6	PAFZZ	5935014439124	77060	12078084	CONNECTOR,RECEPTACL.....	2
* 7	MOOZZ		34623	EX4379	TAPE,HIGH TEMPERATU MAKE FROM TAPE P/N EX4379 LENGTH AS REQUIRED..	1
* 8	PAOZA	5935013176731	71468	CA3108E28-21SF80	CONNECTOR,PLUG ELEC.....	1
* 9	PAOZA	5935001677775	96906	MS27144-1	CONNECTOR,PLUG ELEC.....	8
* 10	PAOZZ	5935011526814	71468	120-1809-000	CONNECTOR,BODY PLUG.....	1
* 11	PAOZZ	5940001139826	98410	C-840-38	TERMINAL,LUG.....	1
* 12	PAOZZ	5940007056702	56501	TG2	TERMINAL,LUG.....	1
* 13	PAOZZ	5935004626603	96906	MS27142-2	CONNECTOR,PLUG ELEC.....	3

END OF FIGURE

UNIT, DIRECT SUPPORT, AND GENERAL SUPPORT MAINTENANCE
REPAIR PARTS AND SPECIAL TOOLS LIST

TRUCK, UTILITY: S250 SHELTER CARRIER, 4X4, M1113 (2320-01-412-0143),
TRUCK, UTILITY: UP-ARMORED CARRIER, 4X4, M1114 (2320-01-413-3739)

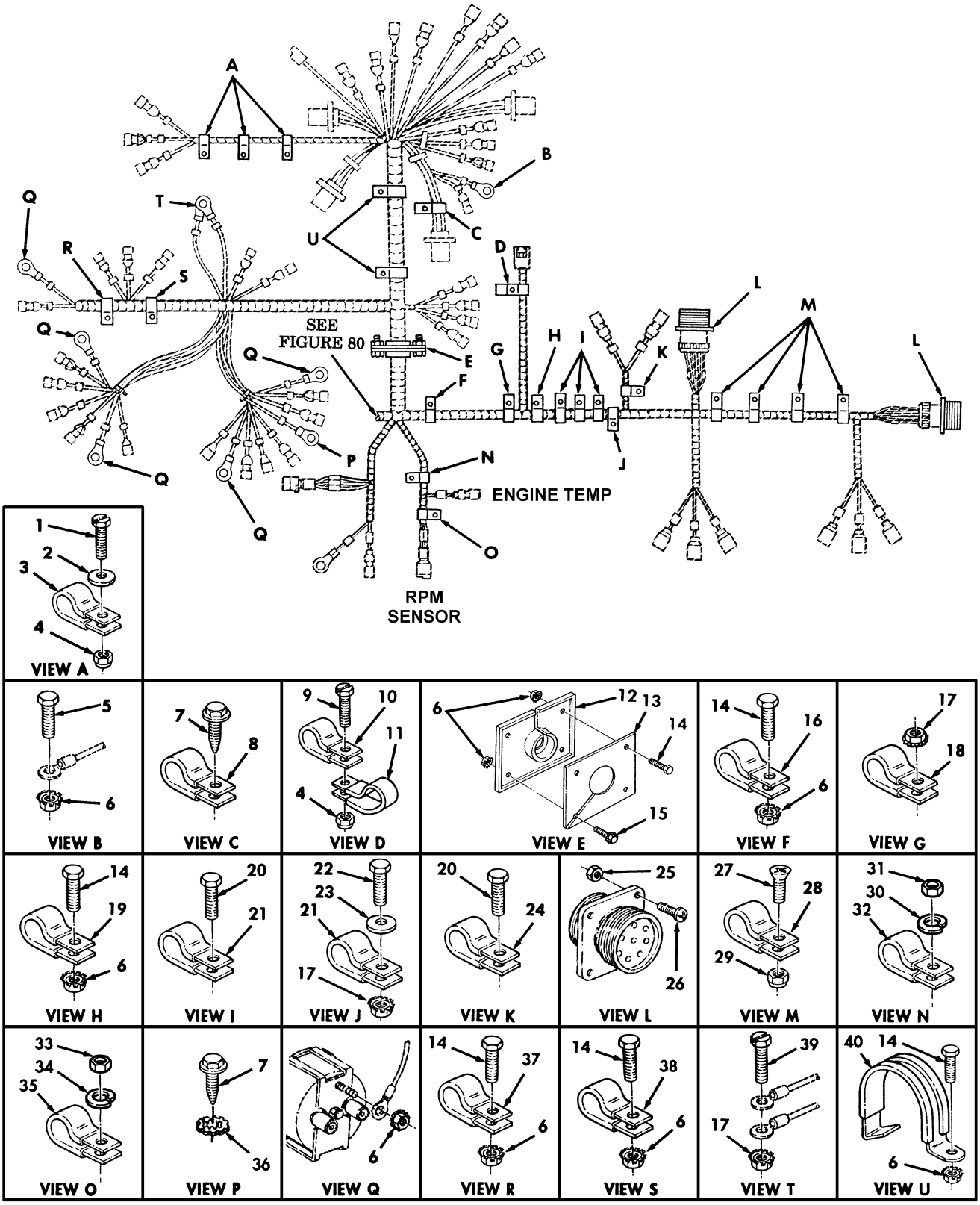

Figure 79. Body Wiring Harness Installation Hardware-Partial View.

(1) ITEM NO	(2) SMR CODE	(3) NSN	(4) CAGEC	(5) PART NUMBER	(6) DESCRIPTION AND USABLE ON CODES(UOC)	(7) QTY
					GROUP 0613 HULL OR CHASSIS WIRING HARNESS	
					FIG. 79 BODY WIRING HARNESS INSTALLATION HARDWARE-PARTIAL VIEW	
1	PAFZZ	5305002406668	96906	MS51849-78	SCREW,MACHINE #10-24 X 1.00.....	3
* 2	PAFZZ	5310012175205	24617	9417714	WASHER,FLAT #10.....	3
3	PAFZZ	5340006899514	96906	MS21333-70	CLAMP,LOOP.....	3
4	PAFZZ	5310002081918	24617	190254	NUT,SELF-LOCKING,HE #10-24.....	4
* 5	PAOZZ	5305015008280	24617	456931	SCREW,CAP,HEXAGON H #10-32 X 1.125.	1
6	PAFZZ	5310001249265	72582	271169	NUT,PLAIN,ASSEMBLED #10-32.....	18
7	PAOZZ	5305010065736	02126	DR-T10X3/4	SCREW,TAPPING .190 X .750.....	2
8	PAFZZ	5340000913790	96906	MS21333-72	CLAMP,LOOP.....	1
9	PAFZZ	5305002400194	96906	MS51849-76	SCREW,MACHINE #10-24 X 3/4.....	1
10	PAFZZ	5340008437825	96906	MS21333-68	CLAMP,LOOP.....	1
11	PAOZZ	5340009848540	96906	MS21333-102	CLAMP,LOOP.....	1
12	PAFZZ	5325012101633	34623	5584391	GROMMET,NONMETALLIC.....	1
13	PAFZZ	5935012129631	19207	12339338	PLATE,RETAINING,ELE.....	1
14	PAFZZ	5305005829501	82386	410-63	SCREW,CAP,HEXAGON H #10-32 X 1/2...	11
15	PAFZZ	5306000425570	24617	425570	BOLT,ASSEMBLED WASH #10-32 X 3/4...	1
16	PAFZZ	5340009899222	96906	MS21333-74	CLAMP,LOOP.....	1
17	PAFZZ	5310011520598	24617	271172	NUT,SELF-LOCKING,AS 1/4-20.....	3
18	PAFZZ	5340008091494	96906	MS21333-105	CLAMP,LOOP.....	1
19	PAFZZ	5340000502740	96906	MS21333-75	CLAMP,LOOP.....	1
20	PAFZZ	5305012068401	7X677	448655	SCREW,TAPPING 1/4-28 X .500.....	4
21	PAFZZ	5340000881254	96906	MS21333-104	CLAMP,LOOP.....	4
22	PAFZZ	5305004890743	24617	9415477	SCREW,MACHINE 1/4-20 X 3/4.....	1
23	PAFZZ	5310012349415	96906	MS51412-5	WASHER,FLAT 9/32.....	1
24	PAFZZ	5340008091492	02769	310-8	CLAMP,LOOP.....	1
25	PAOZZ	5310002416604	96906	MS17830-4C	NUT,SELF-LOCKING,HE .112-40.....	16
26	PAFZZ	5305008892999	96906	MS35206-217	SCREW,MACHINE .112-40 X 5.00.....	16
27	PAFZZ	5305009585246	80205	MS35190-289	SCREW,MACHINE 1/4-20 X .750.....	4
28	PAFZZ	5340008546729	96906	MS21333-103	CLAMP,LOOP.....	4
29	PAOZZ	5310000614650	96906	MS51943-31	NUT,SELF-LOCKING,HE 1/4-20.....	4
30	PAOZZ	5310008094058	96906	MS27183-10	WASHER,LOCK.....	1
31	PAOZZ	5910000614650	96906	MS51943-31	NUT,SELF-LOCKING,HE.....	1
32	PAFZZ	5340009848540	96906	MS21333-102	CLAMP,LOOP.....	1
33	PAOZZ	5310011272456	K1076	9145-105-00B	NUT,HEXAGON M10-1.5.....	1
34	PAOZZ	5310012067306	7X677	11500207	WASHER,LOCK.....	1
35	PAFZZ	5340009891771	96906	MS21333-123	CLAMP,LOOP.....	1
36	PAOZZ	5310000809786	96906	MS45904-60	WASHER,LOCK .190.....	1
37	PAFZZ	5340007647051	96906	MS21333-69	CLAMP,LOOP.....	1
38	PAFZZ	5340000572904	96906	MS21333-71	CLAMP,LOOP.....	1
39	PAOZZ	5305004890743	96906	MS51849-96	SCREW,MACHINE 1/4-20 X .750.....	1
40	PAFZZ	5340012097799	34623	5583717	CLAMP,LOOP.....	4

END OF FIGURE

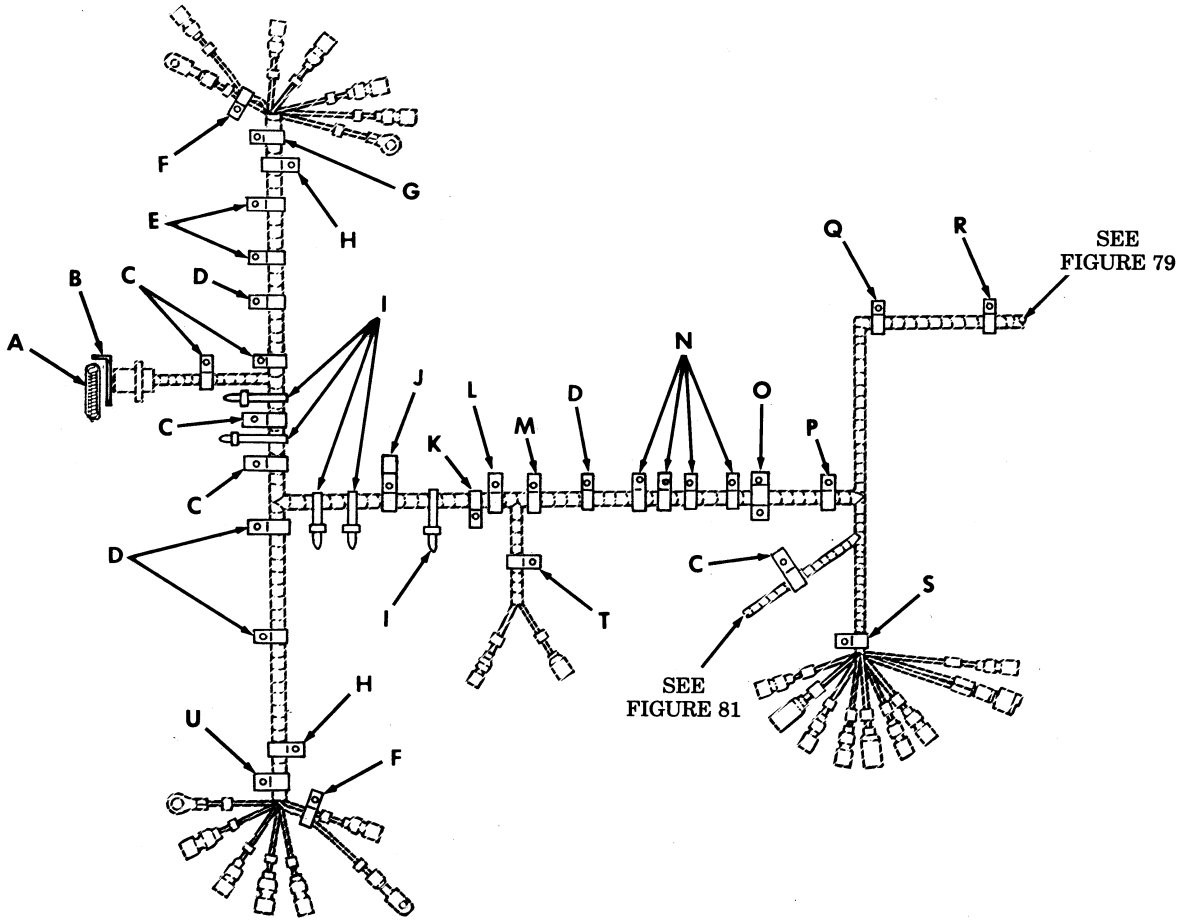

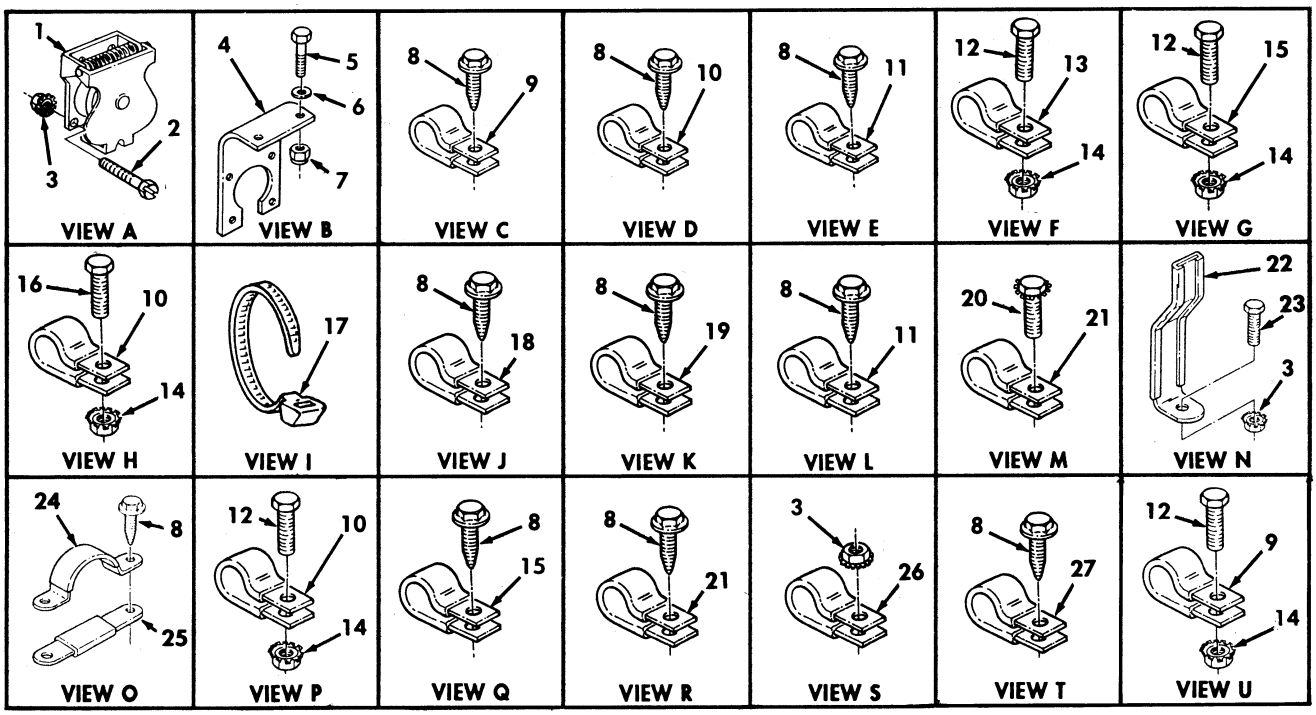

Figure 80. Body Wiring Harness Installation-Partial View.

(1) ITEM NO	(2) SMR CODE	(3) NSN	(4) CAGEC	(5) PART NUMBER	(6) DESCRIPTION AND USABLE ON CODES(UOC)	(7) QTY
					GROUP 0613 HULL OR CHASSIS WIRING HARNESS	
					FIG. 80 BODY WIRING HARNESS INSTALLATION HARDWARE-PARTIAL VIEW	
1	PAOZZ	5935007731428	19207	7731428	COVER,ELECTRICAL CO.....	1
2	PAOZZ	5305003900524	96906	MS51849-98	SCREW,MACHINE 1/4-20 X 1.00.....	4
3	PAFZZ	5310011520598	24617	271172	NUT,SELF-LOCKING,AS 1/4-20.....	9
4	PAOZZ	5340013144951	19207	12338696-1	BRACKET,ANGLE.....	1
5	PAFZZ	5935007731428	19207	7731428	COVER,ELECTRICAL CO.....	2
6	PAOZZ	5310011191024	24617	2436162	WASHER,FLAT 5/16.....	2
7	PAFZZ	5310008140673	96906	MS51943-33	NUT,SELF-LOCKING,HE 5/16-18.....	2
8	PAOZA	5305010065736	02126	DR-T10X3/4	SCREW,TAPPING.....	16
9	PAFZZ	5340009899222	96906	MS21333-74	CLAMP,LOOP.....	3
10	PAFZZ	5340000913790	96906	MS21333-72	CLAMP,LOOP.....	6
11	PAFZZ	5340000502740	96906	MS21333-75	CLAMP,LOOP.....	3
12	PAFZZ	5305005829501	82386	410-63	SCREW,CAP,HEXAGON H #10-32 X 1/2...	6
13	PAFZZ	5340008437825	96906	MS21333-68	CLAMP,LOOP.....	2
14	PAFZZ	5310001249265	72582	271169	NUT,PLAIN,ASSEMBLED #10-32.....	7
15	PAFZZ	5340009226300	96906	MS21333-77	CLAMP,LOOP.....	2
16	PAFZZ	5305000187838	24617	187838	SCREW,CAP,HEXAGON H #10-32 X .62...	1
17	PAOZZ	5975009856630	96906	MS3367-3-0	STRAP,TIEDOWN,ELECT.....	5
18	PAFZZ	5340000572904	96906	MS21333-71	CLAMP,LOOP..... UOC:XAA	1
18	PAFZZ	5340009043705	96906	MS21333-82	CLAMP,LOOP..... UOC:XBB	1
19	PAFZZ	5340000572904	96906	MS21333-71	CLAMP,LOOP.....	1
20	PAFZZ	5306000425570	24617	425570	BOLT,ASSEMBLED WASH #10-32 X .750..	1
21	PAFZZ	5340007247038	96906	MS21333-76	CLAMP,LOOP.....	2
22	PAFZZ	5340012122407	34623	5588629	STRAP,RETAINING.....	4
23	PAFZZ	5305004890743	24617	9415477	SCREW,MACHINE 1/4-20 X 3/4.....	4
24	PAFZZ	5340012134665	19207	12340665	STRAP,RETAINING.....	1
25	PAFZZ	5340014436908	19207	12340666	PLATE,MOUNTING.....	1
26	PAFZZ	5340000881254	96906	MS21333-104	CLAMP,LOOP.....	1
27	PAFZZ	5340007647051	96906	MS21333-69	CLAMP,LOOP.....	1

END OF FIGURE

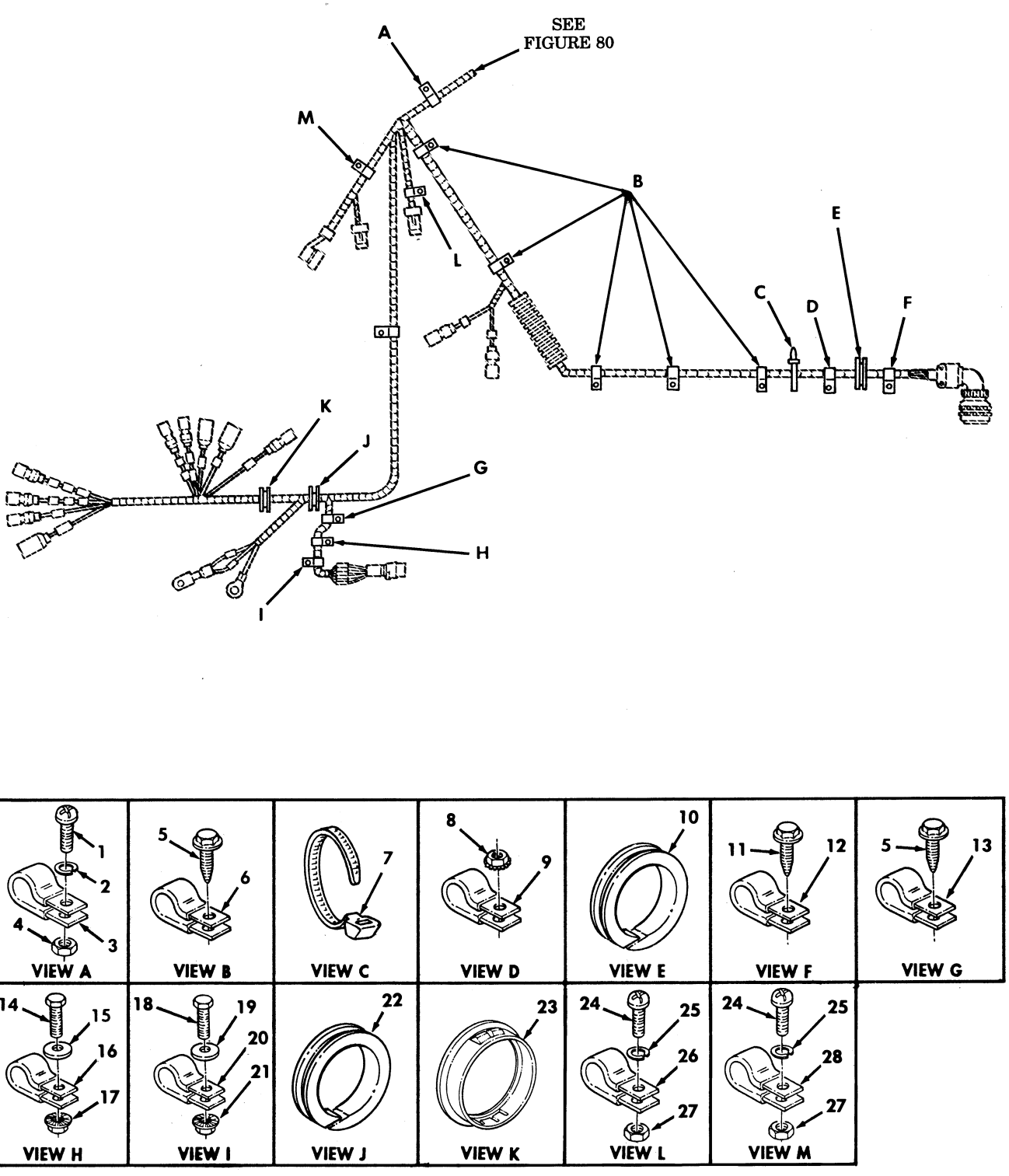

Figure 81. Body Wiring Harness Installation Hardware-Partial View.

(1) ITEM NO	(2) SMR CODE	(3) NSN	(4) CAGEC	(5) PART NUMBER	(6) DESCRIPTION AND USABLE ON CODES(UOC)	(7) QTY
					GROUP 0613 HULL OR CHASSIS WIRING HARNESS	
					FIG. 81 BODY WIRING HARNESS INSTALLATION HARDWARE-PARTIAL VIEW	
1	PAFZZ	5305009846212	96906	MS35206-265	SCREW,MACHINE #10-24 X 3/4.....	1
2	PAOZZ	5310009222017	30379	120217	WASHER,LOCK #10.....	1
3	PAFZZ	5340009899222	96906	MS21333-74	CLAMP,LOOP.....	1
4	PAFZZ	5310009349758	96906	MS35649-202	NUT,PLAIN,HEXAGON #10-24.....	1
5	PAOZA	5305010065736	02126	DR-T10X3/4	SCREW,TAPPING.....	6
6	PAFZZ	5340000502740	96906	MS21333-75	CLAMP,LOOP.....	5
7	PAFZZ	5975009856630	96906	MS3367-3-0	STRAP,TIEDOWN,ELECT.....	1
8	PAOZZ	5310011520598	24617	271172	NUT,SELF-LOCKING,AS 1/4-20.....	1
9	PAFZZ	5340000881254	96906	MS21333-104	CLAMP,LOOP.....	1
10	PAFZZ	5325005159685	70485	2302	GROMMET,NONMETALLIC.....	1
* 11	PAFZZ	5305012067219	92871	9426241	SCREW,TAPPING 1/4-14 X 1/2.....	1
12	PAFZZ	5340008091494	96906	MS21333-105	CLAMP,LOOP.....	1
13	PAFZZ	5340006899514	96906	MS21333-70	CLAMP,LOOP.....	1
* 14	PAOZZ	5305004327954	96906	MS51861-39	SCREW,TAPPING.....	1
15	PAOZZ	5310000145850	96906	MS27183-42	WASHER,FLAT .219.....	1
16	PAFZZ	5340000572904	96906	MS21333-71	CLAMP,LOOP.....	1
17	PAOZZ	5310014618043	24617	9411807	NUT,SELF-LOCKING,EX .190-24.....	1
18	PAOZZ	5306014635232	3M915	9416383	BOLT,MACHINE.....	1
19	PAOZZ	5310000814219	96906	MS27183-12	WASHER,FLAT .344.....	1
20	PAOZZ	5340000573043	96906	MS21333-112	CLAMP,LOOP.....	1
21	PAOZZ	5310014618049	24617	273802	NUT,SELF-LOCKING,EX .3125-18.....	1
22	PAOZZ	5325002766343	96906	MS35489-23	GROMMET,NONMETALLIC.....	1
23	PAOZZ	5325012897859	28520	2400	GROMMET,NONMETALLIC.....	1
24	PAFZZ	5305009881725	96906	MS35206-281	SCREW,MACHINE 1/4-20 X 3/4.....	2
25	PAFZZ	5310006379541	96906	MS35338-46	WASHER,LOCK 3/8 X 16 X 1.....	2
26	PAFZZ	5340008091490	96906	MS21333-98	CLAMP,LOOP.....	1
27	PAFZZ	5310009971888	96906	MS35649-2252	NUT,PLAIN,HEXAGON 1/4-20.....	2
28	PAFZZ	5340000886655	96906	MS21333-101	CLAMP,LOOP.....	1

END OF FIGURE

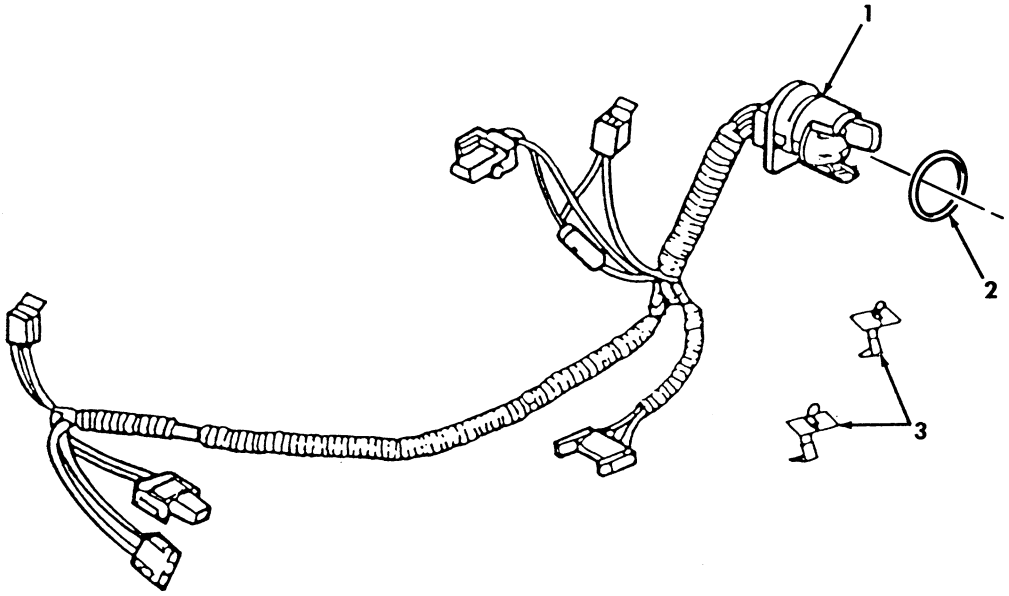

Figure 82. Transmission Wiring Harness.

(1) ITEM NO	(2) SMR CODE	(3) NSN	(4) CAGEC	(5) PART NUMBER	(6) DESCRIPTION AND USABLE ON CODES(UOC)	(7) QTY
					GROUP 0613 HULL OR CHASIS WIRING HARNESS	
					FIG. 82 TRANSMISSION WIRING HARNESS	
* 1	PAFZZ	6150014702011	7X677	12181863	WIRING HARNESS,BRAN.....	1
2	PAFZZ	5330010967699	7X677	10054241	SEAL,SPEEDOMETER.....	1
3	PAFZZ	5340014475839	7X677	8675539	CLIP,SPRING,TENSION.....	2

END OF FIGURE

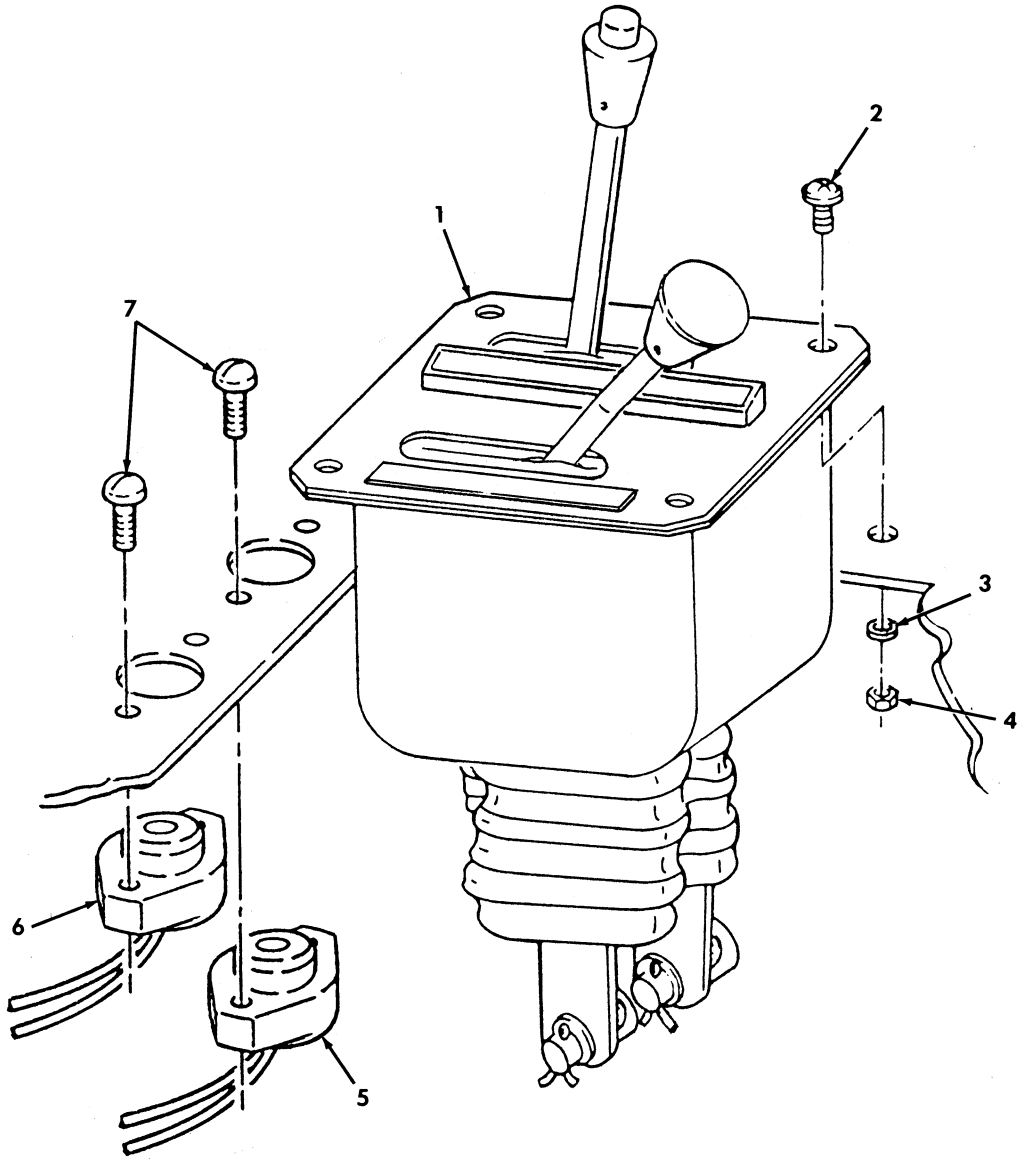

Figure 83. Transmission and Transfer Control Assembly.

(1) ITEM NO	(2) SMR CODE	(3) NSN	(4) CAGEC	(5) PART NUMBER	(6) DESCRIPTION AND USABLE ON CODES(UOC)	(7) QTY
					GROUP 07 TRANSMISSON 0705 TRANSMISSION SHIFTING COMPONENTS	
					FIG. 83 TRANSMISSION AND TRANSFER CONTROL ASSEMBLY	
1	PAOOO	2520014132595	34623	6005790-A	CONTROL ASSEMBLY,GA.....	1
2	PAOZZ	5305009881724	96906	MS35206-280	SCREW,MACHINE 1/4-20 X 7/8.....	4
3	PAOZZ	5310011023270	24617	2436161	WASHER,FLAT 1/4.....	4
4	PAOZZ	5310000614650	96906	MS51943-31	NUT,SELF-LOCKING,HE 1/4-20.....	4
* 5	PAOZZ	6220014126420	9C234	12460092-2	LIGHT,INDICATOR YELLOW.....	1
* 6	PAOZZ	6220014139828	19207	12460092-1	LIGHT,INDICATOR GREEN.....	1
7	PAOZZ	5305011389540	96906	MS51863-33	SCREW,TAPPING.....	4
					END OF FIGURE	

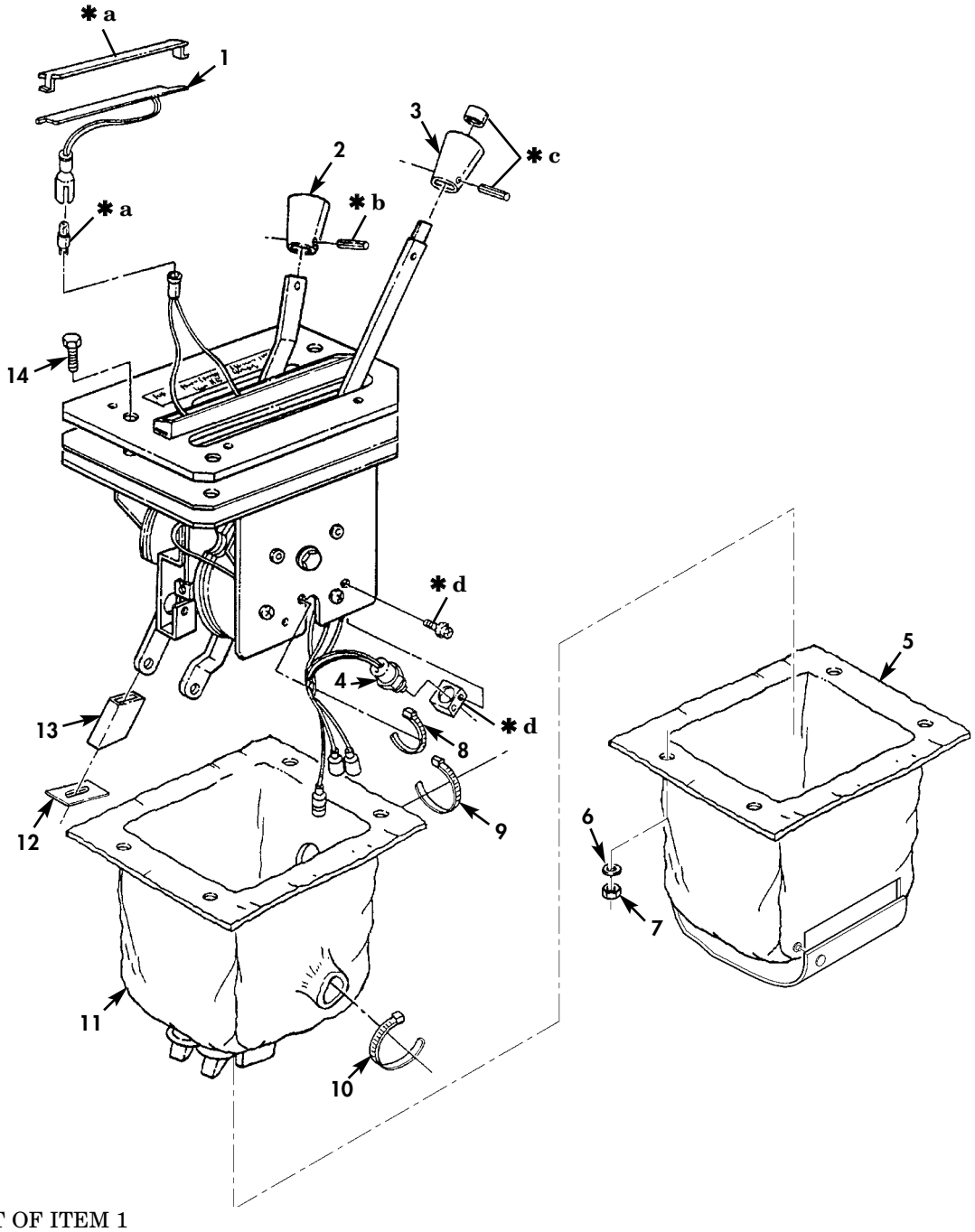

✱**a** PART OF ITEM 1
✱**b** PART OF ITEM 2
✱**c** PART OF ITEM 3
✱**d** PART OF ITEM 4

Figure 84. Transmission Shift Control and Neutral Start Switch.

(1) ITEM NO	(2) SMR CODE	(3) NSN	(4) CAGEC	(5) PART NUMBER	(6) DESCRIPTION AND USABLE ON CODES(UOC)	(7) QTY
					GROUP 0705 TRANSMISSION SHIFTING COMPONENTS	
					FIG. 84 TRANSMISSION SHIFT CONTROL AND NEUTRAL START SWITCH	
1	PAOZZ	2540014630200	34623	5714588	INDICATOR,SHIFT.....	1
2	PAOZZ	5355014604586	34623	5743156	KNOB,KIT.....	1
3	PAOZZ	5355014479655	60602	59267-1	KNOB.....	1
4	PAOZZ	2920014611065	34623	5714585	SWITCH,SAFETY,NEUTR.....	1
* 5	PAOZZ	2540015602873	34623	6013591	INSULATION,THERMAL UOC:TTA,TTT,TT1,UUA,UUU,UU1,UU2	1
6	PAOZZ	5310011023270	24617	2436161	WASHER,FLAT 1/4.....	4
7	PAOZZ	5310000614650	96906	M45913/3-4CG8C	NUT,SELF-LOCKING.....	4
8	PAOZZ	5975009032284	96906	MS3367-4-0	STRAP,TIEDOWN ELECT.....	2
9	PAOZZ	5975010345871	81343	MS3367-7-0	STRAP,TIEDOWN ELECT.....	2
10	PAOZZ	5975010742072	81343	MS3367-1-9	STRAP,TIEDOWN ELECT.....	2
11	PAOZZ	5340014561500	60602	51078-1	BOOT,DUST,AND MOIST.....	2
12	PAOZZ	5340014728534	34623	12460507	PLATE,MOUNTING.....	2
13	PAOZZ	5970013597836	81343	M23053/15-202-0	INSULATION,SLEEVING 1 INCH LONG....	2
14	PAOZZ	5305007122505	80204	B1821BH025C088N	SCREW,CAP,HEXAGON H 1/4-20 X 7/8...	4

END OF FIGURE

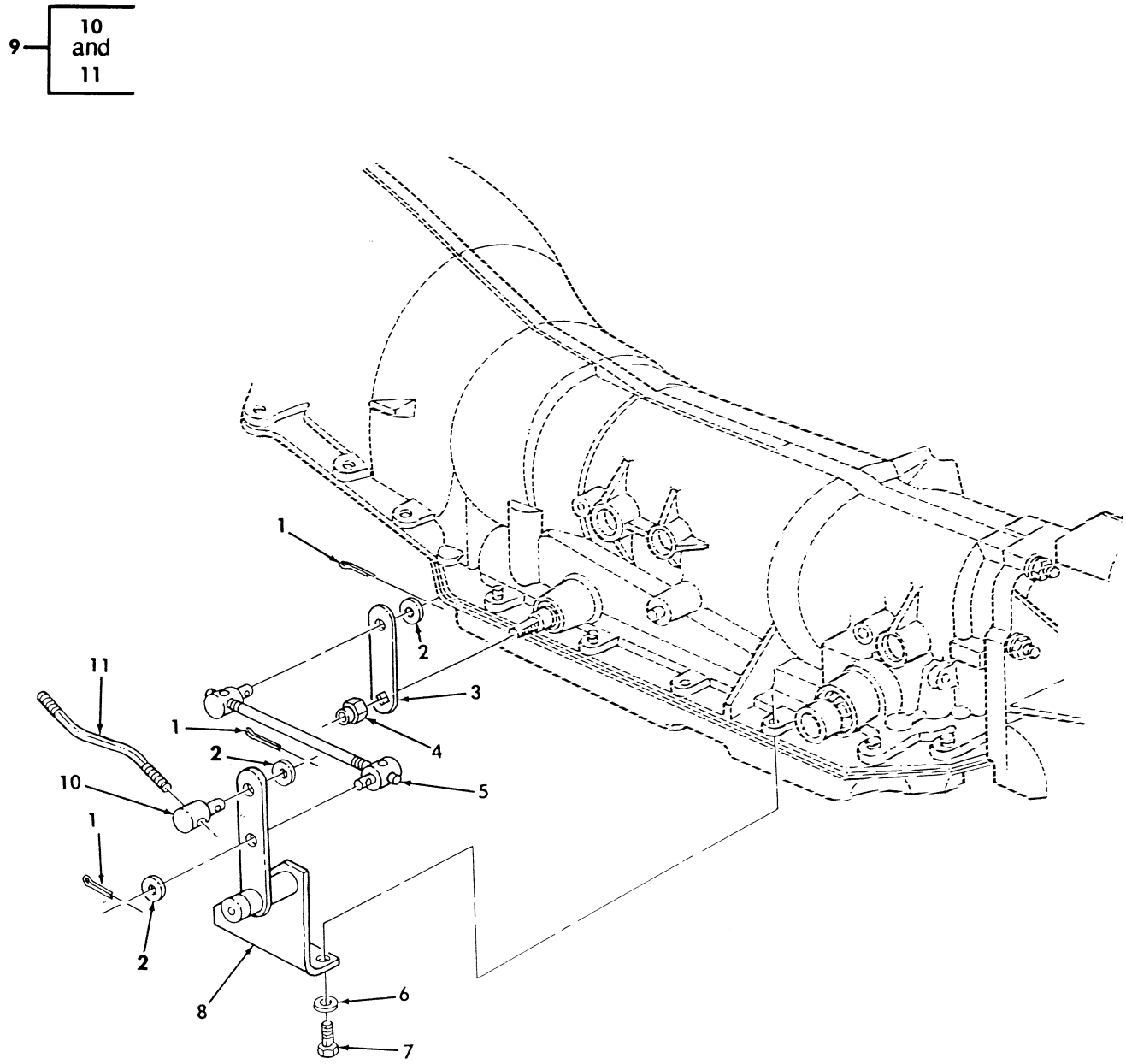

Figure 85. Transmission Shift Lever, Shift Bracket, and Rod.

(1) ITEM NO	(2) SMR CODE	(3) NSN	(4) CAGEC	(5) PART NUMBER	(6) DESCRIPTION AND USABLE ON CODES(UOC)	(7) QTY
					GROUP 0705 TRANSMISSION SHIFTING COMPONENTS	
					FIG. 85 TRANSMISSION SHIFT LEVER, SHIFT BRACKET,AND ROD	
1	PAOZZ	5315008423044	14351	X601	PIN,COTTER 3/32 X 3/4.....	4
* 2	PAOZZ	5310001670821	61465	M2025103	WASHER,FLAT.....	4
* 3	PAOZZ	3040014092502	19207	12447176	CONNECTING LINK,RIG.....	1
4	PAOZZ	5310011552503	7X677	11514603	NUT,PLAIN,HEXAGON 10-1.5 MM.....	1
5	PAOZZ	3040014108054	60602	52827-1	CONNECTING LINK,RIG.....	1
6	PAOZZ	5310014165447	24617	11500161	WASHER,LOCK 8 MM.....	2
7	PAOZZ	5306014112342	7X677	11505074	BOLT,MACHINE 8-1.25 X 35 MM.....	2
8	PAOZZ	3040014109965	60602	52826-1	LEVER ASSEMBLY,REMO.....	1
9	PAOZZ	3040014092500	34623	12460146	CONNECTING LINK,RIG.....	1
10	PAOZZ	2520012491434	34623	5593661	.TRUNNION,SHIFT CONT.....	2
11	XAOZZ		19207	12460066	.ROD.....	1

END OF FIGURE

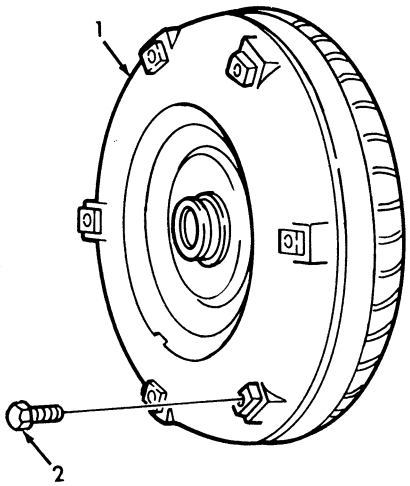

Figure 86. Torque Converter.

(1) ITEM NO	(2) SMR CODE	(3) NSN	(4) CAGEC	(5) PART NUMBER	(6) DESCRIPTION AND USABLE ON CODES(UOC)	(7) QTY
					GROUP 0708 TORQUE CONVERTER AND FLUID COUPLING	
					FIG. 86 TORQUE CONVERTER	
1	PAFZZ	2520014608323	7X677	24204835	TORQUE CONVERTER,VE 1996,97,98,99..	1
* 1	PAFZZ	2520014807553	7X677	24219329	TORQUE CONVERTER 2000.....	1
2	PAFZZ	5305011885133	19207	12340514	SCREW,CAP,HEXAGON H #10-1.5 X 60 MM	6

END OF FIGURE

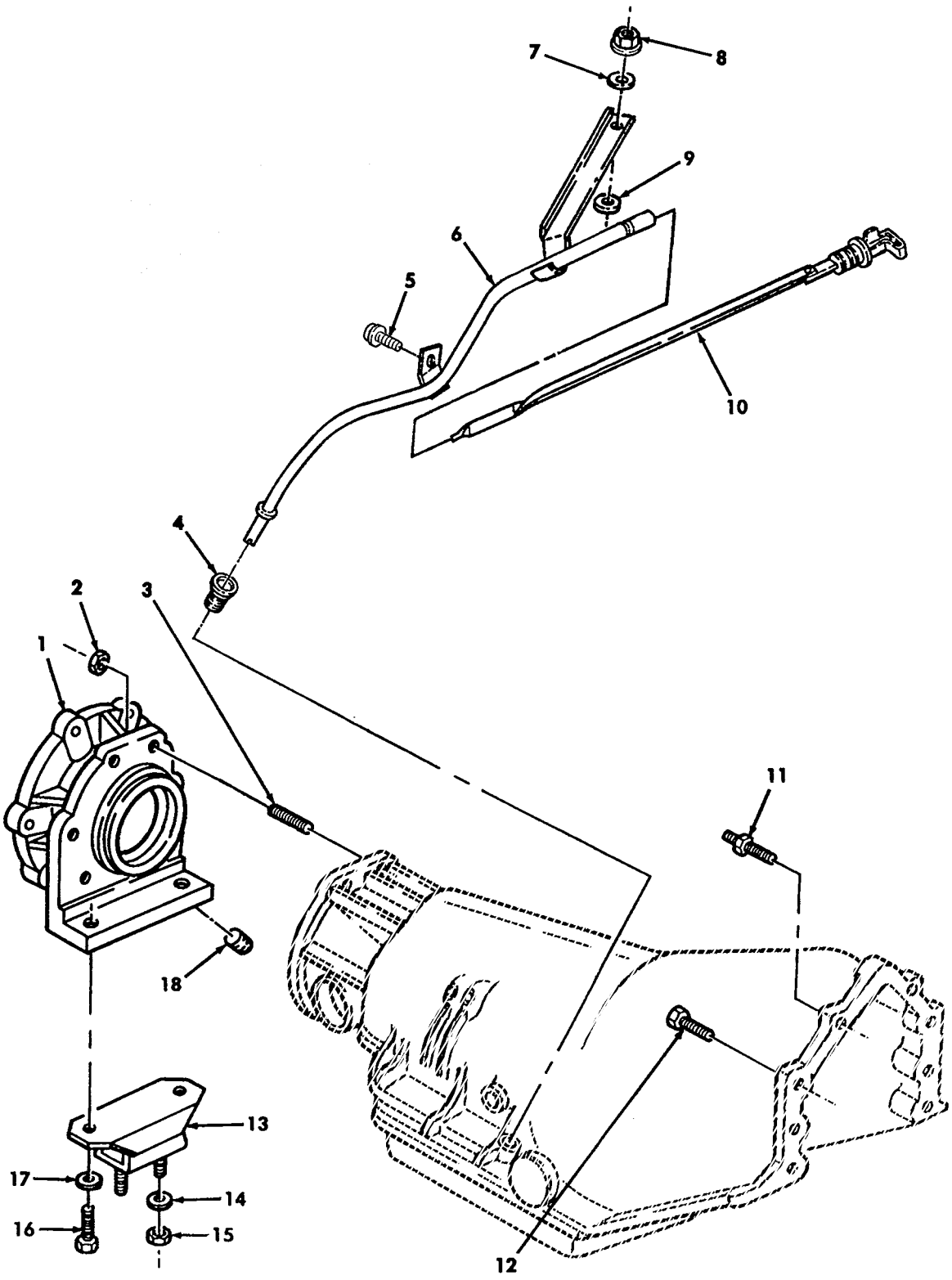

Figure 87. Transmission Mounting Hardware, Fluid Dipstick, and Tube Assembly.

(1) ITEM NO	(2) SMR CODE	(3) NSN	(4) CAGEC	(5) PART NUMBER	(6) DESCRIPTION AND USABLE ON CODES(UOC)	(7) QTY
					GROUP 0710 TRANSMISSION ASSEMBLY	
					FIG. 87 TRANSMISSION MOUNTING HARDWARE,FLUID DIPSTICK,AND TUBE ASSEMBLY	
1	PAFZZ	2520014641772	34623	12447175	ADAPTER ASSEMBLY,PU.....	1
2	PAFZZ	5310004478774	96906	MS51988-8	NUT,SELF-LOCKING,EX 3/8-24.....	6
3	PAFZZ	5307014112336	34623	6002942	STUD,PLAIN.....	6
4	PAOZA	5330014474762	19207	12447172	SEAL,NONMETALLIC SP.....	1
5	PAOZZ	5306014558013	34623	6007736	BOLT,MACHINE M8-1.25 X 15 MM.....	1
6	PAOZZ	2590014430361	19207	12469144	FILLER NECK,VEHICUL.....	1
* 7	PAOZZ	5310012866077	19207	12341856	WASHER,FLAT.....	1
* 8	PAOZZ	5310015129400	24617	11506007	NUT,HEX FLANGE.....	1
* 9	PAOZZ	5310000806004	96906	MS27183-14	WASHER,FLAT.....	1
* 10	PAOZZ	6680014326884	34623	12469145	GAGE ROD,LIQUID LEV.....	1
11	PAFZZ	5307011907650	19207	12339662	STUD,SHOULDERED FOR USE UP TO 1998 ENGINE.....	2
12	PAFZZ	5305006882111	80204	B1821BH038C138N	SCREW,CAP,HEXAGON H FOR USE UP TO 1998 ENGINE.....	4
12	PAFZZ	5305014388821	80204	B18231B10035N	SCREW,CAP,HEXAGON H 1999 AND 2000..	6
13	PAOZZ	5342011907735	19207	12339178	MOUNT,RESILIENT.....	1
14	PAOZZ	5310014124013	24617	2436163	WASHER,FLAT 3/8.....	2
15	PAOZZ	5310009359021	96906	MS51943-35	NUT,SELF-LOCKING,HE 3/8-16.....	2
16	PAOZZ	5305007320511	80204	B1821BH050C113N	SCREW,CAP,HEXAGON H 1/2-13 X 1.25..	2
17	PAOZZ	5310005845272	96906	MS35338-48	WASHER,LOCK 1/2.....	2
18	PAOZZ	4730000444689	24617	444689	PLUG,PIPE.....	1

END OF FIGURE

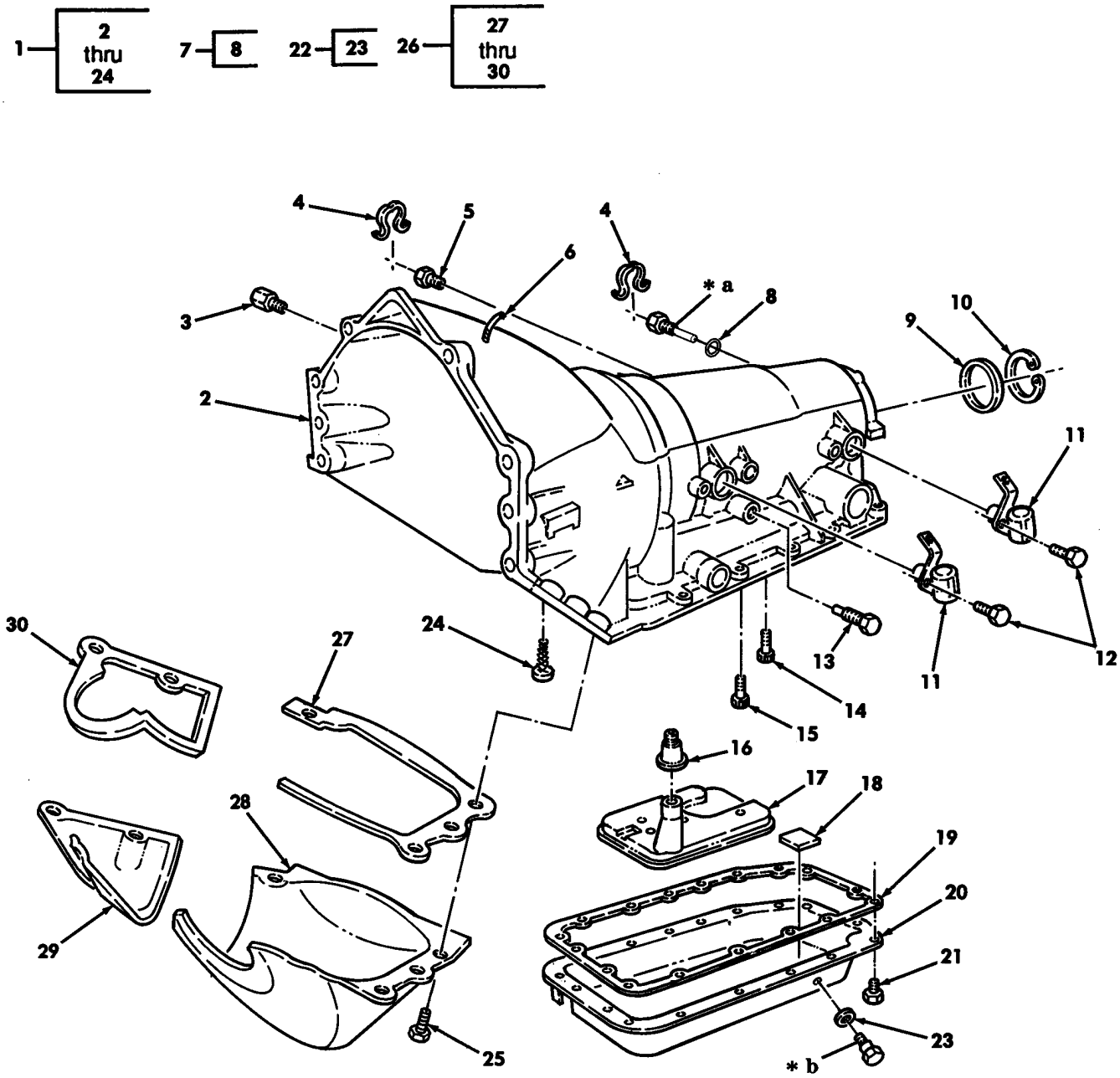

Figure 88. Transmission Assembly.

(1) ITEM NO	(2) SMR CODE	(3) NSN	(4) CAGEC	(5) PART NUMBER	(6) DESCRIPTION AND USABLE ON CODES(UOC)	(7) QTY
					GROUP 0710 TRANSMISSON ASSEMBLY	
					FIG. 88 TRANSMISSON ASSEMBLY	
* 1	KFFHH		72590	24205225	TRANSMISSION,HYDRAU 1996,97 PART OF KIT P/N 57K3522.....	1
1	KFFHH		72590	24208605	TRANSMISSION,HYDRAU 1998 PART OF KIT P/N 57K3540	1
1	KFFHH		72590	24211292	TRANSMISSION,HYDRAU 1999 PART OF KIT P/N 57K3548	1
1	KFFHH		72590	24214094	TRANSMISSION,HYDRAU 2000 PART OF KIT P/N 57K3559.....	1
1	KFFHH		72590	24214664	TRANSMISSION,HYDRAU 2001 PART OF KIT P/N 57K3570.....	1
2	XAHZZ		7X677	24203366	.CASE,TRANSMISSION 1996.....	1
* 2	XAHZZ		7X677	24207168	.CASE,TRANSISSION 1997,98,99,00,01.	1
* 3	PAOZZ	4730011777501	7X677	8651654	.ADAPTER,STRAIGHT,PI 1996.....	2
4	PAOZZ	5340014744011	7X677	24205103	.CLIP,RETAINING 1997 AND ABOVE.....	2
* 5	PAOZZ		7X677	24205102	.ADAPTER,STRAIGHT,PI 1997 AND ABOVE	2
6	PAOZZ	4710014773362	7X677	24200374	.TUBE,VENT.....	1
* 7	PAOZZ		7X677	24207013	.ADAPTER,STRAIGHT P 1997 AND ABOVE.	1
* 8	PAOZZ		7X677	8680235	..O-RING.....	1
9	PAFZZ	5330014608988	7X677	8675517	.SEAL,PLAIN PART OF KIT P/N 22404441 PART OF KIT P/N 24210954 PART OF KIT P/N 24205251.....	1
* 10	PAFZZ	5325014609908	7X677	8675524	.RING,RETAINING.....	1
* 11	PAOZZ	2990013991023	61928	24203876	.SENSOR,EGR VALVE,EM SPEED.....	2
* 12	PAOZZ	5306014748837	7X677	11514308	.BOLT,MACHINE PART OF KIT P/N 24205251 PART OF KIT P/N 24204441..	1
* 13	PAOZZ	4730011662244	81349	WW-P-471ACABUA	.PLUG,PIPE.....	1
* 14	PAHZZ	5306014613557	7X677	8661762	.BOLT,MACHINE PART OF KIT P/N 24205251 PART OF KIT P/N 24204441...	1
* 15	PAHZZ	5306014613555	7X677	8686124	.BOLT,MACHINE PART OF KIT P/N 24205251 PART OF KIT P/N 24204441 PART OF KIT P/N 24200418.....	1
* 16	PAOZZ	5330013970374	7X677	8656613	.SEAL,PLAIN ENCASED PART OF KIT P/N 24202111 PART OF KIT P/N 24204441 PART OF KIT P/N 24210955 PART OF KIT P/N 24210954 PART OF KIT P/N 24210956 PART OF KIT P/N 24205251...	1
* 17	PAOZZ	2520013984589	7X677	8684221	.PARTS KIT,HYDRAULIC 1996 PART OF 24204441 PART OF KIT P/N 24205251...	1
* 17	KFOZZ		7X677	24210468	.FILTER 1997,98 PART OF KIT P/N 24210955 PART OF KIT P/N 24210954 PART OF KIT P/N 24210956.....	1
* 18	KFOZZ		7X677	8654701	.MAGNET,CHIP COLLECT 1996 PART OF KIT P/N 8685921.....	1
* 18	KFOZZ		7X677	8665830	.MAGNET,CHIP COLLECT 1997,98,99,00 ,01 PART OF KIT P/N 24204278.....	1
* 19	PAOZZ	5330013605271	7X677	8677743	.GASKET.....	1
* 20	KFOZZ		7X677	8682888	.PAN,TRANSMISSION 1996 PART OF KIT P/N 8685921.....	1

(1) ITEM NO	(2) SMR CODE	(3) NSN	(4) CAGEC	(5) PART NUMBER	(6) DESCRIPTION AND USABLE ON CODES(UOC)	(7) QTY
* 20	KFOZZ		7X677	24203377	.PAN,TRANSMISSION 1997,98,99,00,01.	1
* 21	PAOZZ	5310002059983	72582	116103	.WASHER,FLAT 1996 PART OF KIT P/N 8685291.....	1
* 21	PAOZZ	5330014802502	7X677	24205123	.GASKET 1997,98,99,00,01 PART OF KIT P/N 24204278.....	1
* 22	PAOZZ	5340014608207	7X677	8675529	.PLUG,PROTECTIVE,DUS 1996 PART OF KIT P/N 8685921.....	1
* 23	PAOZZ	5365014806812	7X677	24213991	.PLUG,DRAIN 1997,98,99,00,01 PART OF KIT P/N 24204278.....	1
* 24	PAHZZ	2520014612374	7X677	8661834	.SCREEN,VALVE AUTOMA.....	1
* 25	PAOOO	5340014913964	19207	12460093	COVER,ACCESS.....	1
* 26	PAOZZ	5302011865381	7X677	11515763	SCREW,CAP HEXAGON H.....	5
* 27	PAOZZ	5330014132118	19207	12460095	.GASKET.....	1
* 28	PAOZZ	5340014123563	34623	EC-RCSK1834-3-1	.COVER,ACCESS.....	1
* 29	PAOZZ	5340013145602	19207	12342107	.COVER,ACCESS.....	1
* 30	PAOZZ	5330013151609	19207	12342105	.GASKET.....	1

END OF FIGURE

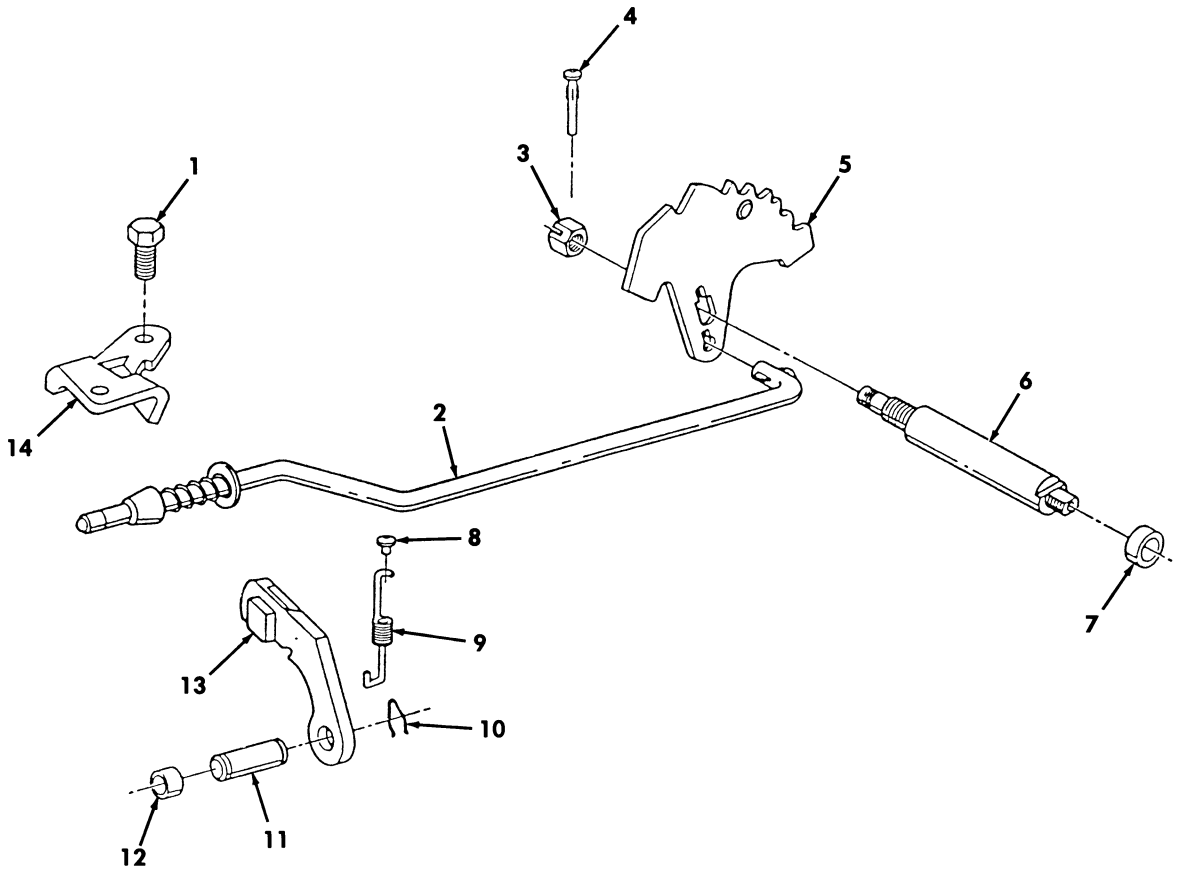

Figure 89. Parking Lock System.

(1) ITEM NO	(2) SMR CODE	(3) NSN	(4) CAGEC	(5) PART NUMBER	(6) DESCRIPTION AND USABLE ON CODES(UOC)	(7) QTY
					GROUP 0710 TRANSMISSION ASSEMBLY	
					FIG. 89 PARKING LOCK SYSTEM	
1	PAFZZ	5306011971492	24617	11508687	BOLT,MACHINE.....	2
2	PAFZZ	3040014477995	7X677	24200173	CONNECTING LINK,RIG.....	1
3	PAFZZ	5310014470968	7X677	8648178	NUT,PLAIN,HEXAGON.....	1
4	PAFZZ	5315014470492	7X677	8678347	PIN,STRAIGHT,HEADLE.....	1
5	KFFZZ		7X677	24201001	LEVER,REMOTE CONTRO PART OF KIT P/N 24204472.....	1
6	KFFZZ		7X677	24200999	SHAFT PART OF KIT P/N 24204472.....	1
7	PAFZZ	5330012511607	7X677	8657163	GASKET PART OF KIT P/N 24202111 PART OF KIT P/N 24204441 PART OF KIT P/N 24205251 PART OF KIT P/N 24210955 PART OF KIT P/N 24210956.....	1
8	PAFZZ	5315014088020	7X677	8678122	PIN,STRAIGHT,HEADED.....	1
9	PAFZZ	5360014614931	7X677	24202611	SPRING,HELICAL,EXTE.....	1
10	PAFZZ	5340011625883	24617	451786	CLIP,RETAINING.....	1
11	PAFZZ	5315014609907	7X677	8661692	PIN,STRAIGHT,HEADLE.....	1
12	PAFZZ	4730014605520	7X677	24200224	PLUG,PIPE PART OF KIT P/N 24205251..	1
13	PAFZZ	3040014609964	7X677	8661693	PAWL.....	1
14	PAFZZ	4710014608316	7X677	24200347	BRACKET.....	1

END OF FIGURE

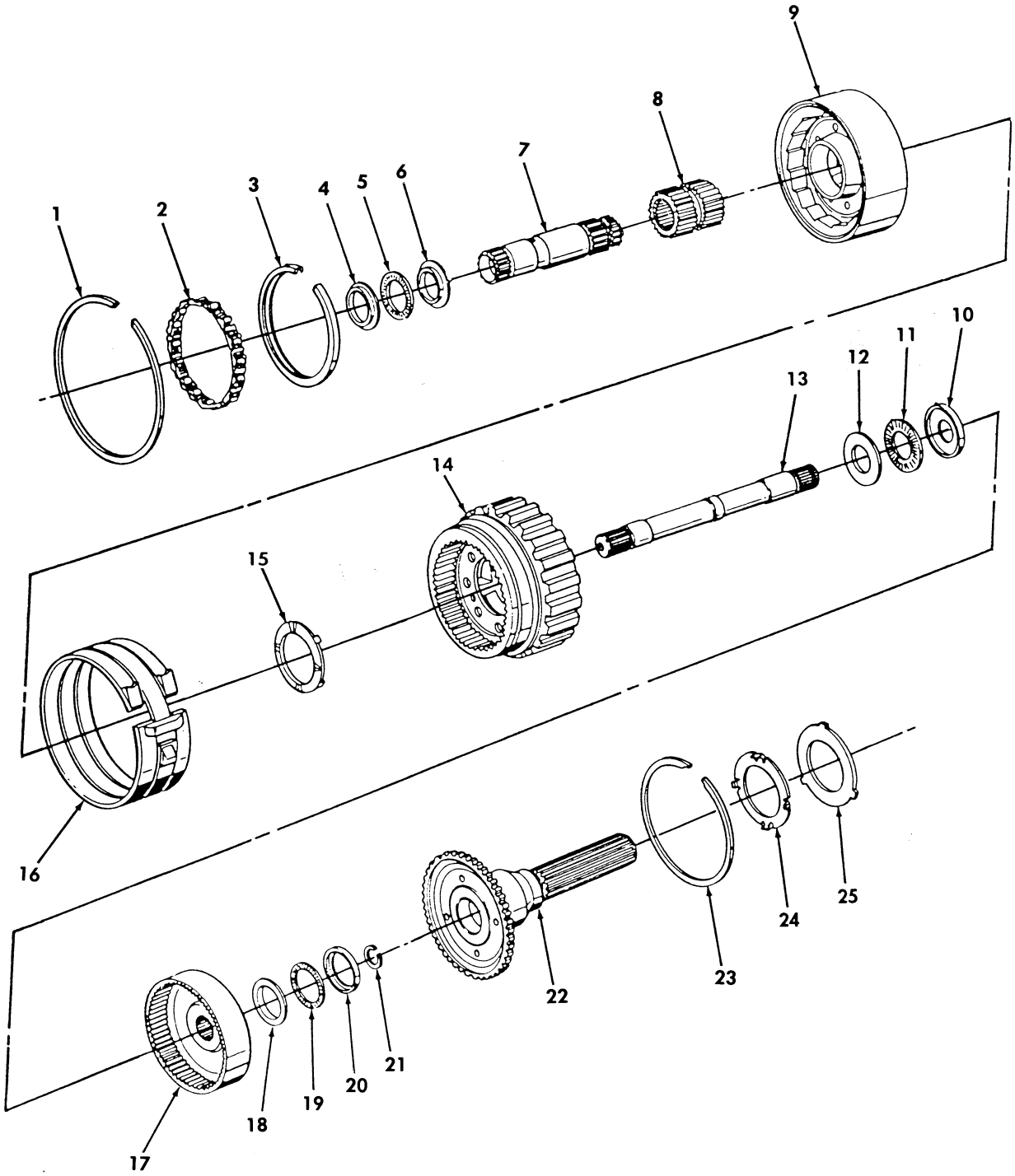

Figure 90. Planetary Gear Carrier.

(1) ITEM NO	(2) SMR CODE	(3) NSN	(4) CAGEC	(5) PART NUMBER	(6) DESCRIPTION AND USABLE ON CODES(UOC)	(7) QTY
					GROUP 0710 TRANSMISSION ASSEMBLY	
					FIG. 90 PLANETARY GEAR CARRIER	
1	PAHZZ	5325011548562	7X677	8626816	RING,RETAINING.....	1
2	PAHZZ	2520011491221	7X677	930679	ROLLER ASSEMBLY,CLU PART OF KIT P/N 24205551 PART OF KIT P/N 24205552...	1
3	PAHZZ	5325011548561	7X677	8627657	RING,RETAINING.....	1
4	KFHZZ		7X677	8623183	RACE,BEARING PART OF KIT P/N 8623920	1
5	KFHZZ		7X677	8624784	BEARING,NEEDLE PART OF KIT P/N 8623920.....	1
6	KFHZZ		7X677	8623204	RACE,THRUST BEARING PART OF KIT P/N 8623920.....	1
7	PAHZZ	3040014473797	7X677	8661708	SHAFT,STRAIGHT 1996.....	1
7	PAHZZ	3040014807297	7X677	24207247	SHAFT,STRAIGHT 1997,98,99,00.....	1
8	PAHZZ	3020011497941	7X677	8626807	GEAR,HELICAL 1996.....	1
8	PAHZZ	3020014807299	7X677	24203397	GEAR,HELICAL 1997.....	1
8	PAHZZ	3020014807302	7X677	24209475	GEAR,HELICAL 1998,99,00.....	1
9	KFHZZ		7X677	24202346	CARRIER ASSEMBLY 1996,97 SPUR CUT GEARS PART OF KIT P/N 24205552.....	1
9	KFHZZ		7X677	24212051	CARRIER ASSEMBLY TR 1998,99,00 HELICAL CUT GEARS PART OF KIT P/N 24205551.....	1
10	KFHZZ		7X677	8623196	RACE,BEARING 1996 PART OF KIT P/N 8623921.....	1
10	KFHZZ		7X677	24204962	RACE,BEARING 1997,98,99,00 PART OF KIT P/N 24208848.....	1
11	KFHZZ		7X677	8626817	BEARING NEEDLE PART OF KIT P/N 8623921 PART OF KIT P/N 24208848....	1
12	KFHZZ		7X677	8623194	RACE,BEARING PART OF KIT P/N 8623921 PART OF KIT P/N 24208848.....	1
13	PAHZZ	3040014108068	7X677	8661613	SHAFT,SHOULDERED 1996.....	1
13	PAHZZ	3040014807309	7X677	24203400	SHAFT,SHOULDERED 1997,98,99,00.....	1
14	PAHZZ	2520014610107	7X677	8675612	CARRIER,TRANSMISSIO 1996,97.....	1
14	PAHZZ	3040014807536	7X677	8675611	CARRIER,TRANSMISSIO 1998,99,00.....	1
15	PAHZZ	3120011547174	7X677	8626372	BEARING,WASHER,THRU.....	1
16	PAHZZ	3040014807593	7X677	24202229	BRAKE BAND AND LINI.....	1
17	PAHZZ	3020014807311	7X677	8683771	GEAR,INTERNAL 1996.....	1
17	PAHZZ	3020014807321	7X677	24203399	GEAR,INTERNAL 1997.....	1
17	PAHZZ	3020014807630	7X677	24203398	GEAR,INTERNAL 1998,99,00.....	1
18	KFHZZ		7X677	8623204	RACE,THRUST BEARING PART OF KIT P/N 8623922.....	1
19	KFHZZ		7X677	8624784	BEARING,NEEDLE PART OF KIT P/N 8623922.....	1
20	KFHZZ		7X677	8623206	RACE,BEARING PART OF KIT P/N 8623922	1
21	PAHZZ	5325011748626	7X677	8625221	RING,RETAINING.....	1
22	PFHZZ	3040014108071	7X677	8661598	GEARSHAFT,SPUR 1996.....	1
22	PFHZZ	3040014807591	7X677	24204291	GEARSHAFT,SPUR 1997,98,99,00.....	1
23	PAHZZ	5325011504982	7X677	8626173	RING,RETAINING.....	1
24	PAHZZ	3120011547174	7X677	8626372	BEARING,WASHER,THRU.....	1
25	PAHZZ	3120011548516	7X677	8625401	BEARING,WASHER,THRU .074-.078.....	1
25	PAHZZ	3120011595773	7X677	8625402	BEARING,WASHER,THRU .082-.086.....	1
25	PAHZZ	3120011544369	7X677	8625403	BEARING,WASHER,THRU .090-.094.....	1

(1) ITEM NO	(2) SMR CODE	(3) NSN	(4) CAGEC	(5) PART NUMBER	(6) DESCRIPTION AND USABLE ON CODES(UOC)	(7) QTY
25	PAHZZ	3120011614033	7X677	8625404	BEARING,WASHER,THRU .098-.102.....	1
25	PAHZZ	3120011625787	7X677	8625405	BEARING,WASHER,THRU .106-.110.....	1
25	PAHZZ	3120011548517	7X677	8625406	BEARING,WASHER,THRU .114-.118.....	1

END OF FIGURE

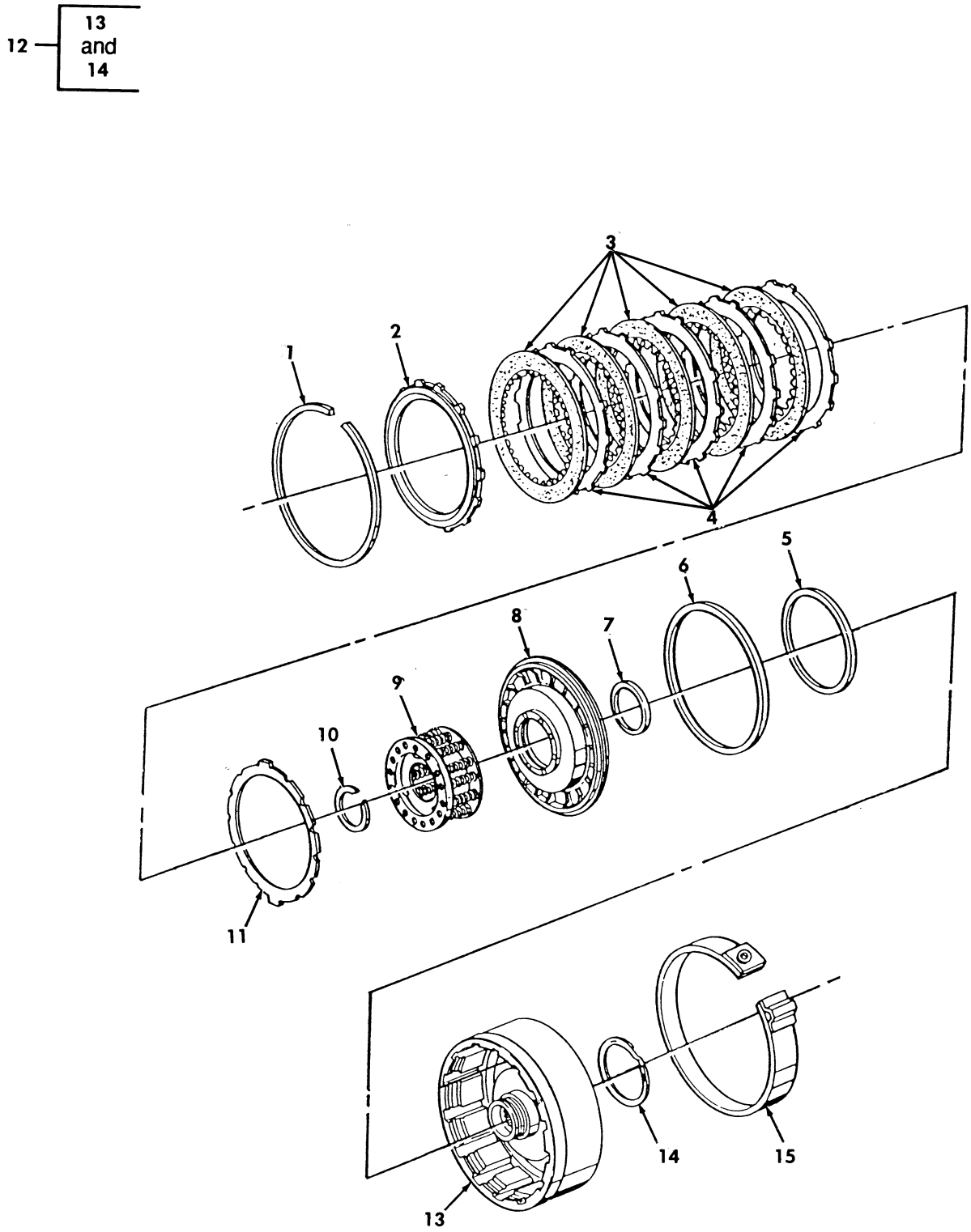

Figure 91. Direct Clutch Assembly.

(1) ITEM NO	(2) SMR CODE	(3) NSN	(4) CAGEC	(5) PART NUMBER	(6) DESCRIPTION AND USABLE ON CODES(UOC)	(7) QTY
					GROUP 0713 INTERMEDIATE CLUTCH	
					FIG. 91 DIRECT CLUTCH ASSEMBLY	
1	PAHZZ	5325000073052	7X677	8623112	RING,RETAINING.....	1
2	PAHZZ	2520014610076	7X677	8675557	RETAINER,CLUTCH PLA.....	1
3	PAHZZ	2520011503932	7X677	24202646	DISK,CLUTCH PART OF KIT P/N 24204441 PART OF KIT P/N 24205251 PART OF KIT P/N 24210954.....	5
4	PAHZZ	2520001721947	73342	29530330	DISK,CLUTCH.....	5
5	KFHZZ		24617	24209225	SEAL,DIRECT CLUTCH PART OF KIT P/N 24204441 PART OF KIT P/N 24205251 PART OF KIT P/N 24210954.....	1
* 6	KFHZZ		24617	8677583	SEAL,PISTON,OUTER 1996 PART OF KIT 24204441 PART OF KIT P/N 24205251...	1
7	KFHZZ		7X677	8677582	SEAL,PISTON,INNER 1996 PART OF KIT P/N 24204441 PART OF KIT 24205251...	1
8	PAHZZ	2520014135540	61928	8675511	PISTON,CLUTCH SHAFT 1996.....	1
* 8	PAHZZ	2520014748871	7X677	24204961	PISTON,CLUTCH SHAFT 1997,98,99,00..	1
9	PAHZZ	2520014610099	7X677	8661764	SPRING AND RETAINER.....	1
10	PAHZZ	5325011713392	7X677	8623105	RING,RETAINING.....	1
11	PAHZZ	2520013928435	61928	8680816	DISK,CLUTCH 1996.....	1
11	PAHZZ	2520014818479	7X677	24205560	DISK,CLUTCH,VEHICUL 1997,98,99,00..	1
* 12	PAHZZ	2520014112749	7X677	24209311	CLUTCH ASSEMBLY,FRI.....	1
13	XAHZZ		7X677	24209244	.HOUSING,DIRECT CLUT.....	1
14	PAHZZ	5340014760352	7X677	8675558	.RING,RETAINING PART OF KIT P/N 8680915.....	1
15	PAHZZ	3040014807595	7X677	24202631	BAND,CLUTCH,FRONT.....	1

END OF FIGURE

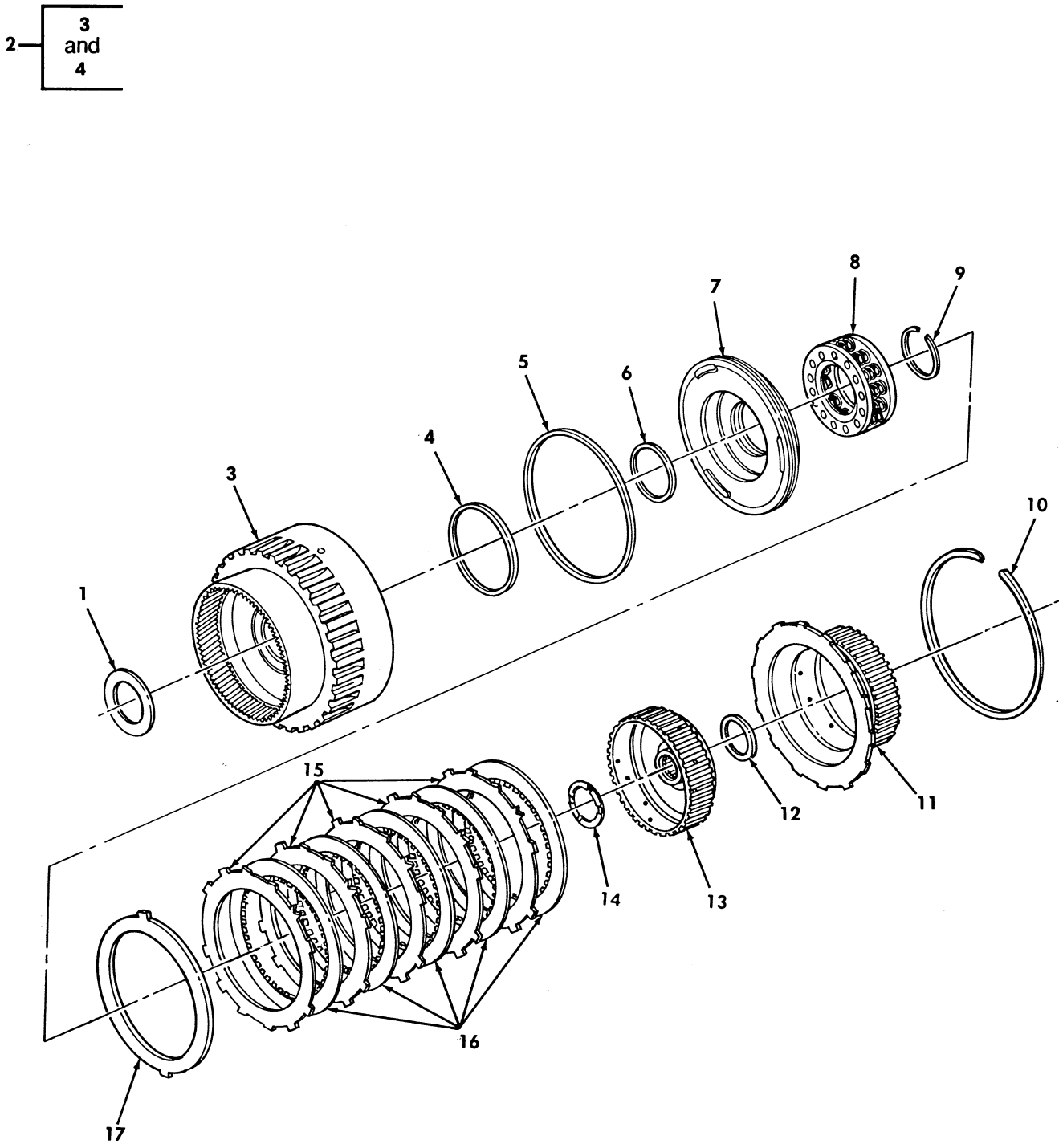

Figure 92. Forward Clutch.

(1) ITEM NO	(2) SMR CODE	(3) NSN	(4) CAGEC	(5) PART NUMBER	(6) DESCRIPTION AND USABLE ON CODES(UOC)	(7) QTY
					GROUP 0713 INTERMEDIATE CLUTCH	
					FIG. 92 FORWARD CLUTCH	
* 1	PAHZZ	3120014784269	7X677	8628202	BEARING,WASHER,THRU.....	1
* 2	PAHZZ	2520014859405	7X677	24222173	HOUSING PART,TRANSM.....	1
3	XAHZZ		7X677	24203499	.HOUSING,FORWARD CLU.....	1
4	KFHZZ		7X677	8677582	.SEAL,INNER 1996 PART OF KIT P/N 24204441 PART OF KIT P/N 24205251...	1
4	KFHZZ		7X677	24207501	.SEAL,INNER 1997,98,99,00 PART OF KIT P/N 24210954.....	1
5	KFHZZ		7X677	24202359	SEAL,INNER 1996 PART OF KIT P/N 24204441 PART OF KIT P/N 24205251...	1
6	KFHZZ		7X677	8677583	SEAL,OUTER 1996 PART OF KIT P/N 24204441 PART OF KIT P/N 24205251...	1
* 7	PAHZZ	3040014934036	7X677	8675508	PISTON,LINEAR ACTUA 1996.....	1
* 7	PAHZZ	2520014786604	7X677	24204957	PISTON,LINEAR ACTUA 1997,98,99,00..	1
8	PAHZZ	2520014610099	7X677	8661764	SPRING AND RETAINER.....	1
9	PAHZZ	5325011713392	7X677	8623105	RING,RETAINING.....	1
10	PAHZZ	5325000073052	7X677	8623112	RING,RETAINING 6.24 X .062.....	1
* 11	PAHZZ	2520014786607	7X677	8661837	HUB,BODY.....	1
12	PAHZZ	3120002555697	7X677	8624781	BEARING,WASHER,THRU.....	1
13	PAHZZ	3020014792069	7X677	8677091	GEAR,SPUR.....	1
14	PAHZZ	3120011568763	7X677	8624196	BEARING,WASHER,THRU.....	1
15	PAHZZ	2520011503931	7X677	8623849	DISK,CLUTCH,VEHICUL.....	5
16	PAHZZ	2520011503932	7X677	24202646	DISK,CLUTCH PART OF KIT P/N 24204441 PART OF KIT P/N 24205251 PART OF KIT P/N 24210954.....	5
17	PAHZZ	2520013928435	61982	8680816	DISK,CLUTCH 1996.....	1
17	PAHZZ	2520014818479	7X677	24205560	DISK,CLUTCH 1997,98,99,00.....	1

END OF FIGURE

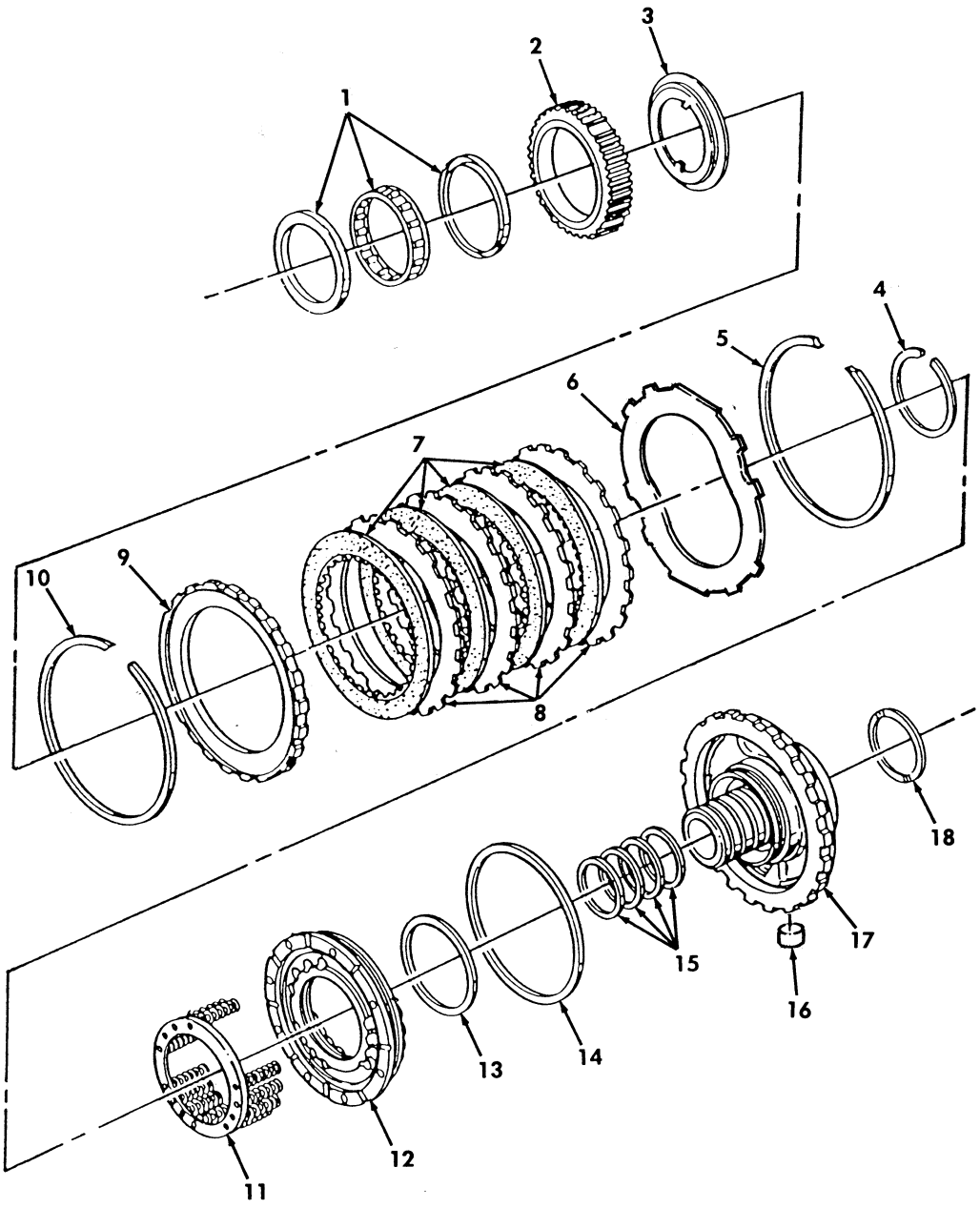

Figure 93. Intermediate Clutch and Center Support Assembly.

(1) ITEM NO	(2) SMR CODE	(3) NSN	(4) CAGEC	(5) PART NUMBER	(6) DESCRIPTION AND USABLE ON CODES(UOC)	(7) QTY
					GROUP 0713 INTERMEDIATE CLUTCH	
					FIG. 93 INTERMEDIATE CLUTCH AND CENTER SUPPORT ASSEMBLY	
1	PAHZZ	2520014610092	7X677	8633173	SPRAG ASSEMBLY PART OF KIT P/N 8680915.....	1
2	KFHZZ		7X677	8675520	RACE,OUTER PART OF KIT P/N 8680915..	1
3	PAHZZ	2520011481868	7X677	8627334	DISK,CLUTCH,VEHICUL PART OF KIT P/N 8680915.....	1
4	PAHZZ	5325011582182	7X677	8623153	RING,RETAINING.....	1
5	PAHZZ	5325011604693	7X677	8623437	RING,RETAINING.....	1
6	PAHZZ	2520014562736	7X677	24204497	DISK,CLUTCH.....	1
7	PAHZZ	2520014567883	7X677	24202966	DISK,CLUTCH PART OF KIT P/N 24205251 PART OF KIT P/N 24210954...	1
8	PAHZZ	2520014610074	7X677	8675522	RING,DRIVE PLATE,TR.....	4
9	PAHZZ	2520014610073	7X677	8675519	RING,DRIVE PLATE,TR.....	1
10	PAHZZ	5325011507830	7X677	8623149	RING,RETAINING.....	1
11	PAHZZ	2520014604961	7X677	24202976	SPRING AND RETAINER.....	1
* 12	PAHZZ	2520014748868	7X677	25242552	BEARING,CLUTCH PART OF KIT P/N 24205348.....	1
13	PAHZZ	5330014785994	7X677	25202360	PACKING,PREFORMED PART OF KIT P/N 24204441 PART OF KIT P/N 24204449...	1
14	PAHZZ	5330014783900	7X677	24202361	PACKING,PREFORMED PART OF KIT P/N 24204441 PART OF KIT P/N 24204449 PART OF KIT P/N 24205251 PART OF KIT 24210954.....	1
15	KFHZZ		7X677	8675279	RETAINER,PACKING 1996,97 PART OF KIT P/N 24204441 PART OF KIT P/N 24205251 PART OF KIT P/N 24210954...	4
* 15	KFHZZ		7X677	24205722	RETAINER,PACKING 1998 AND ABOVE PART OF KIT P/N 24210954.....	4
* 16	PAHZZ		7X677	24203511	SEAL 1997 AND ABOVE PART OF KIT P/N 24208849.....	1
17	KFHZZ		7X677	8683075	SUPPORT 1996 PART OF KIT P/N 8680914 PART OF KIT P/N 24205348....	1
* 17	KFHZZ		7X677	24207180	SUPPORT 1997 AND ABOVE PART OF KIT P/N 24208849.....	1
18	PAHZZ	3120011554468	7X677	8623211	BEARING,WASHER,THRU.....	1

END OF FIGURE

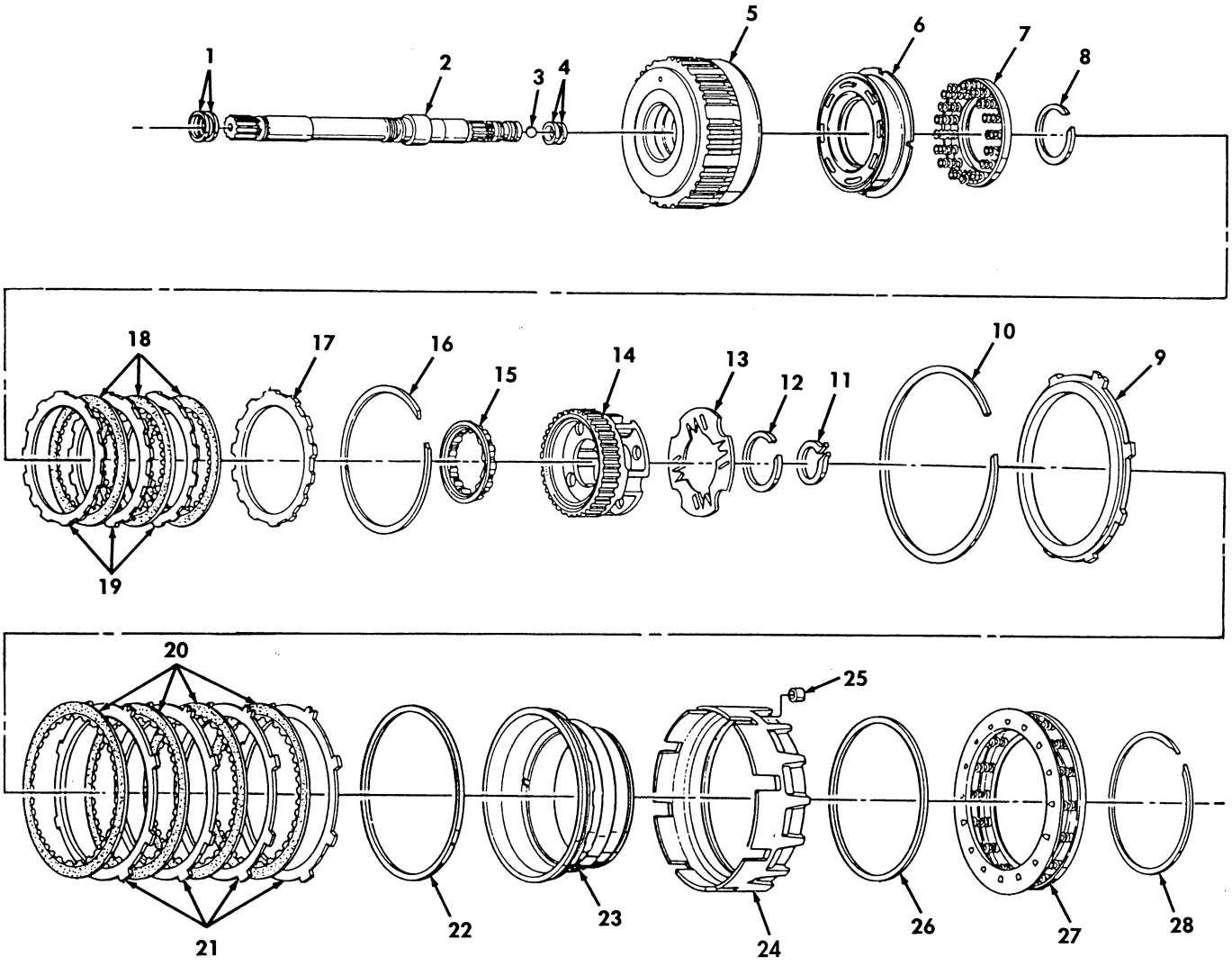

Figure 94. Overrun, Overdrive, and Fourth Clutch Assembly.

(1) ITEM NO	(2) SMR CODE	(3) NSN	(4) CAGEC	(5) PART NUMBER	(6) DESCRIPTION AND USABLE ON CODES(UOC)	(7) QTY
					GROUP 0713 INTERMEDIATE CLUTCH	
					FIG. 94 OVERRUN,OVERDRIVE,AND FOURTH CLUTCH ASSEMBLY	
1	PAHZA	5330014683604	24617	8661894	SEAL,PLAIN ENCASED PART OF KIT P/N 24204441 PART OF KIT P/N 25205251 PART OF KIT P/N 24210954.....	2
* 2	PAHZZ	2835014784268	7X677	24200128	SHAFT ASSEMBLY TURB PART OF KIT P/N 24200130 PART OF KIT P/N 8680918....	1
3	PAHZZ	3110014120490	7X677	453571	BALL,BEARING .28.....	2
4	KFHZZ		7X677	8661893	SEAL,PLAIN PART OF KIT P/N 24205251 PART OF KIT P/N 24204441 PART OF KIT P/N 24210954.....	2
5	PAHZZ	2520014108079	7X677	8680918	HOUSING PART,TRANSM.....	1
6	PAHZZ	2520014565014	7X677	24202092	CARRIER,CLUTCH ASSE.....	1
7	PAHZZ	2520014610085	7X677	8661629	RETAINER AND SPRING.....	1
8	PAHZZ	5325014087971	7X677	8661568	RING,RETAINING.....	1
9	PAHZZ	2520014091751	7X677	8661582	RETAINER,CLUTCH PLA.....	1
10	PAHZZ	5325014087972	7X677	8677887	RING,RETAINING.....	1
11	PAHZZ	5325014087969	7X677	8675523	RING,RETAINING.....	1
12	PAHZZ	5325014128806	7X677	8679439	RING,RETAINING PART OF KIT P/N 8680911.....	1
13	PAHZZ	2520014610083	7X677	8661623	RETAINER,CLUTCH PLA.....	1
* 14	PAHZZ	3010014608309	7X677	24202160	CARRIER,GEAR ASSEMB.....	1
15	PAHZZ	3110014115784	7X677	930678	RETAINER,ROLLER,BEA.....	1
16	PAHZZ	5325014087970	7X677	8661572	RING,RETAINING.....	1
17	PAHZZ	2520014610078	7X677	8661449	RETAINER,CLUTCH PLA.....	1
18	KFHZZ		7X677	8661571	DISK,CLUTCH PART OF KIT P/N 24205251 PART OF KIT P/N 24204441 PART OF KIT P/N 24210954.....	3
* 19	PAHZZ	2520014091767	7X677	24204287	PLATE,INTERMEDIATE.....	3
20	KFHZZ		7X677	8682802	DISK,CLUTCH,VEHICUL PART OF KIT P/N 24205251 PART OF KIT P/N 24204441 PART OF KIT P/N 24210954.....	4
21	PAHZZ	2520014113959	7X677	8661579	PLATE,INTERMEDIATE.....	4
22	PAHZZ	5331014144161	7X677	24202358	O-RING PART OF KIT P/N 24205251 PART OF KIT P/N 24204441 PART OF KIT P/N 24210954.....	1
23	PAHZZ	2520014786609	7X677	8661271	PISTON,CLUTCH.....	1
24	KFHZZ		7X677	8686122	HOUSING,FRICTION CL PART OF KIT P/N 24200789.....	1
25	PAHZZ	5340014088522	7X677	8624209	PLUG,VENT.....	1
26	KFHZZ		7X677	24202357	O-RING PART OF KIT P/N 24205251 PART OF KIT P/N 24204441 PART OF KIT P/N 24210954.....	1
27	PAHZZ	2520014108241	7X677	8661577	CLUTCH SPRING GUIDE.....	1
28	PAHZZ	5325014617157	7X677	8661578	RING,RETAINING.....	1

END OF FIGURE

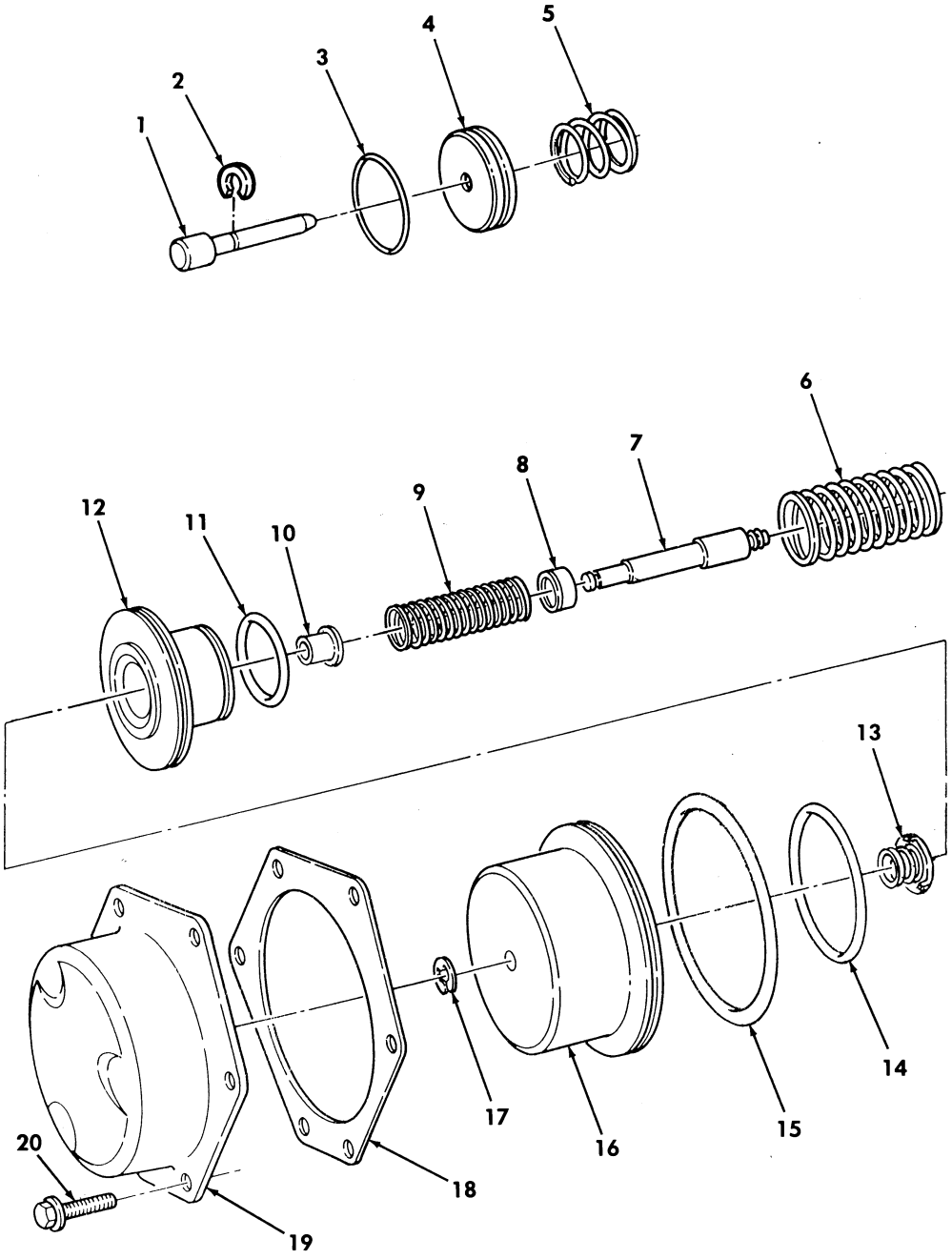

Figure 95. Front Servo, Rear Servo, and Governor Assembly.

(1) ITEM NO	(2) SMR CODE	(3) NSN	(4) CAGEC	(5) PART NUMBER	(6) DESCRIPTION AND USABLE ON CODES(UOC)	(7) QTY
					GROUP 0714 SERVO UNIT	
					FIG. 95 FRONT SERVO,REAR SERVO, AND GOVERNOR ASSEMBLY	
1	KFHZZ		7X677	8685473	PIN PART OF KIT P/N 24200418.....	1
2	KFHZZ		7X677	8685474	WASHER,SLOTTED PART OF KIT P/N 24200418.....	1
3	PAHZZ	5330011632614	7X677	8626423	SEAL RING,METAL PART OF KIT P/N 24204441 PART OF KIT P/N 24200418 PART OF KIT P/N 24205251 PART OF KIT P/N 24210954.....	1
4	KFHZZ		7X677	8685472	PISTON PART OF KIT P/N 24200418.....	1
5	PAHZZ	5360011506086	7X677	8623489	SPRING,HELICAL,COMP.....	1
6	PAHZZ	5360014766291	7X677	8624391	SPRING,HELICAL,COMP.....	1
7	PAHZZ	5315014562737	7X677	24202577	PIN,SHOULDER,HEADLE 3.300-3.306, #1.....	1
7	PAHZZ	5315014562739	7X677	24202578	PIN,SHOULDER,HEADLE 3.356-3.362, #3.....	1
7	PAHZZ	5315014566254	7X677	24202579	PIN,SHOULDER,HEADLE 3.412-3.418, #5.....	1
7	PAHZZ	5315014562738	7X677	24202580	PIN,SHOULDER,HEADLE 3.328-3.334, #2.....	1
7	PAHZZ	5315014562740	7X677	24202581	PIN,SHOULDER,HEADLE 3.384-3.390, #4.....	1
7	PAHZZ	5315014567882	7X677	24202582	PIN,SHOULDER,HEADLE 3.440-3.446, #6.....	1
7	PAHZZ	5315014562743	7X677	24202583	PIN,SHOULDER,HEADLE 3.468-3.474, #7.....	1
8	PAHZZ	5340011546559	7X677	8623664	SEAT,HELICAL COMPRE.....	1
9	PAHZZ	5360011507829	7X677	8623666	SPRING,HELICAL,COMP.....	1
10	PAHZZ	5365014562742	7X677	24202986	SPACER.SLEEVE.....	1
11	KFHZZ		7X677	8678294	RING,OIL SEAL PART OF KIT P/N 24205250.....	1
12	KFHZZ		7X677	24202928	PISTON,LINEAR PART OF KIT P/N 24205250.....	1
13	PAHZZ	5360014562745	7X677	24202987	SPRING,HELICAL,COMP.....	1
14	KFHZZ		7X677	8661890	RING,OIL SEAL PART OF KIT P/N 8680929 PART OF KIT P/N 24205250....	1
15	PAHZZ	5330011506239	7X677	8623430	GASKET PART OF KIT P/N 24202111 PART OF KIT P/N 24204441 PART OF KIT P/N 24205251 PART OF KIT P/N 24210955 PART OF KIT P/N 24210954.....	1
16	PAHZZ	3040014567881	7X677	24202985	PISTON,LINEAR ACTUA.....	1
* 17	PAHZZ	5325014807331	7X677	11514578	CLIP,RETAINING.....	1
18	PAHZZ	5330014784797	7X677	8675728	GASKET PART OK KIT P/N 24202111 PART OF KIT P/N 24204441 PART OF KIT P/N 24205251 PART OF KIT P/N 24210955 PART OF KIT P/N 24210954.....	1
19	PAHZZ	5340014562741	7X677	24202282	COVER,ACCESS.....	1
* 20	PAHZZ	5306014916414	7X677	8676000	BOLT,MACHINE.....	6

END OF FIGURE

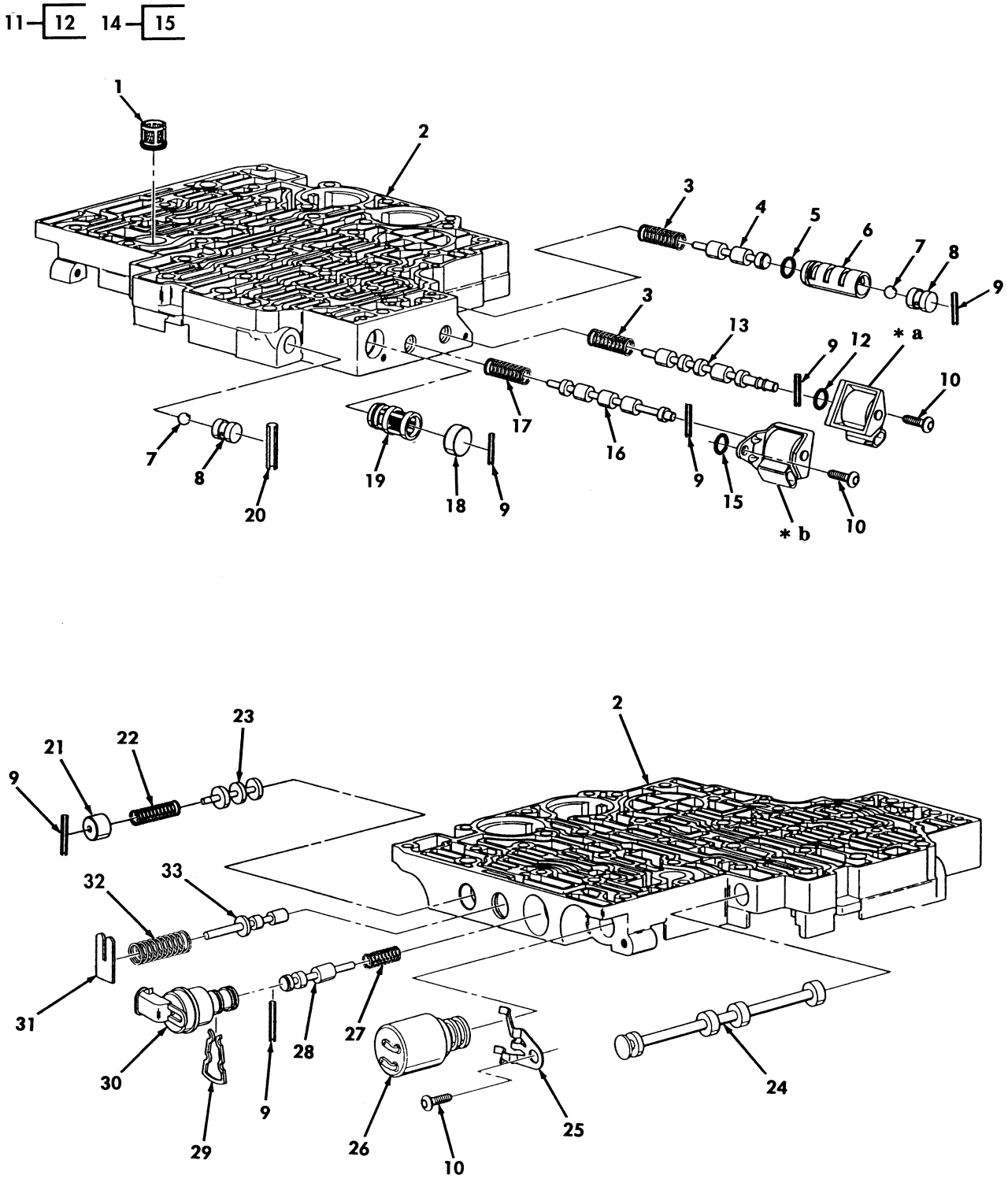

*** a** PART OF ITEM 11
*** b** PART OF ITEM 14

Figure 96. Control Valve and Related Parts.

(1) ITEM NO	(2) SMR CODE	(3) NSN	(4) CAGEC	(5) PART NUMBER	(6) DESCRIPTION AND USABLE ON CODES(UOC)	(7) QTY
					GROUP 0714 SERVO ASSEMBLY	
					FIG. 96 CONTROL VALVE AND RELATED PARTS	
1	KFHZZ		7X677	8684218	FILTER ELEMENT,FLUI PART OF KIT P/N 24202111 PART OF KIT P/N 24204441 PART OF KIT P/N 24205251 PART OF KIT P/N 24210954 PART OF KIT P/N 24210955.....	1
2	XAHZZ		7X677	24202957	BODY,CONTROL VALVE 1996.....	1
2	XAHZZ		7X677	24204266	BODY,CONTROL VALVE 1997,98,99,00...	1
3	PAHZZ	5360014609069	7X677	8661891	SPRING,HELICAL,COMP.....	2
4	XAHZZ		7X677	8661801	VALVE,3-4 SHIFT.....	1
5	PAHZZ	5330014567886	7X677	24201388	PACKING,PREFORMED.....	1
6	XAHZZ		11862	24201390	BUSHING.....	1
7	XAHZZ		7X677	147500	BALL .375 DIA.....	2
8	XAHZZ		7X677	24201389	PLUG.....	2
9	XAHZZ		7X677	8675535	PIN.....	6
10	PAHZZ	5306014748959	7X677	11513697	BOLT,INTERNAL WRENC.....	3
11	PAHZZ	2920013977094	7X677	10478133	COIL,ELECTRICAL 2-3 SHIFT,1996.....	1
* 11	PAHZZ	5950014805377	7X677	10478148	COIL,ELECTRICAL 2-3 SHIFT,1997,98, 99,00.....	1
* 12	PAHZZ	5331014942431	7X677	10483630	.O RING.....	1
13	XAHZZ		7X677	8661804	VALVE,SHIFT.....	1
* 14	PAHZZ	5950014805380	7X677	10478147	COIL,ELECTRICAL 1-2 SHIFT,1996.....	1
14	PAHZZ	2520014116540	7X677	10478142	VALVE,SHFT SOL 1-2 SHIFT,1997,98, 99,00.....	1
* 15	PAHZZ	5331014942431	7X677	10483630	.O RING.....	1
16	XAHZZ		7X677	8661805	VALVE.....	1
17	XAHZZ		7X677	8661873	SPRING.....	1
18	XAHZZ		7X677	8661821	PLUG.....	1
19	PAHZZ	4330014112786	7X677	8661709	FILTER ELEMENT,FLUI.....	1
20	XAHZZ		7X677	8661867	SLEEVE.....	1
* 21	XAHZZ		7X677	8661822	PLUG.....	1
* 22	XAHZZ		7X677	8676074	SPRING.....	1
* 23	XAHZZ		11862	24202959	VALVE.....	1
* 24	PAHZZ	4820014091218	7X677	8678337	SLIDE,DIRECTIONAL C.....	1
* 25	PAHZZ	5340014608362	7X677	8684217	CLIP,SPRING TENSION.....	1
* 26	PAHZZ	5945014787862	7X677	24209276	SOLENOID.....	1
* 27	XAHZZ		7X677	8661871	SPRING.....	1
* 28	XAHZZ		7X677	8681899	VALVE.....	1
* 29	PAHZZ	5340014608364	7X677	8678523	CLIP,SPRING TENSION.....	1
* 30	PAHZZ	5950013990257	7X677	8683188	COIL,ELECTRICAL.....	1
* 31	PAHZZ	5340014608363	7X677	8684215	CLIP,SPRING TENSION.....	1
* 32	XAHZZ		7X677	8684214	SPRING.....	1
* 33	XAHZZ		7X677	8684213	VALVE.....	1

END OF FIGURE

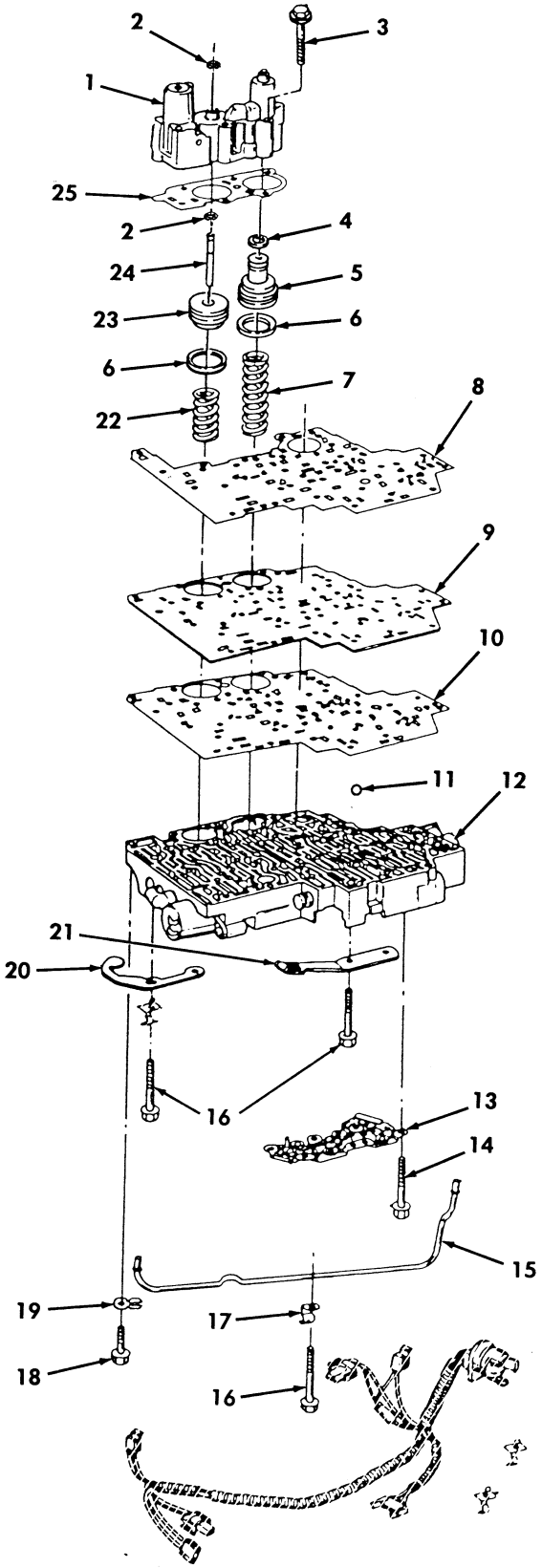

Figure 97. Control Valve, Accumulator, and Related Parts.

(1) ITEM NO	(2) SMR CODE	(3) NSN	(4) CAGEC	(5) PART NUMBER	(6) DESCRIPTION AND USABLE ON CODES(UOC)	(7) QTY
					GROUP 0714 SERVO ASSEMBLY	
					FIG. 97 CONTROL VALVE,ACCUMULATOR, AND RELATED PARTS	
1	PAHHH	2520014092509	7X677	8684220	HOUSING PART,TRANSM.....	1
* 2	PFHZZ	5325014087973	7X677	9413349	RING,RETAINING PART OF KIT P/N 24206749.....	2
3	PAHZZ	5306014699903	7X677	8675533	BOLT,MACHINE.....	6
4	PAHZA	5330014706543	7X677	8661639	PACKING,PREFORMED PART OF KIT P/N 24206749.....	1
5	PAHZZ	2520014442711	61928	8683088	PISTON,CLUTCH SHAFT.....	1
6	KFHZZ		7X677	8661647	PACKING,PREFORMED PART OF KIT P/N 24206749.....	2
7	PAHZZ	5360014762629	7X677	24200436	SPRING,HELICAL COMP.....	1
8	KFHZZ		7X677	8684205	GASKET 1996 PART OF KIT P/N 24202111 PART OF KIT P/N 24204111...	1
8	PAHZZ	5330014738584	7X677	24204268	GASKET 1997,98,99,00 PART OF KIT P/N 24210955	1
9	PAHZZ	2520014567888	7X677	24202963	PLATE 1996.....	1
9	PAHZZ	2520014759665	7X677	24204270	PLATE,SPACER VALVE 1997,98,99,00...	1
10	PAHZZ	5330014562744	7X677	24201115	GASKET 1996 PART OF KIT P/N 24202111 PART OF KIT P/N 24204111...	1
10	PAHZZ	5330014755993	7X677	24204253	GASKET 1997,98,99,00.....	1
11	PAHZZ	3110009002560	96906	MS19061-20007	BALL,BEARING .25.....	8
12	PAHHH	2520014598532	7X677	24202943	VALVE ASSEMBLY,TRAN 1996.....	1
* 12	PAHHH	2520014887016	7X677	24209112	VALVE ASSEMBLY 1997,98,99,00.....	1
* 13	PAHZZ	5930014567880	7X677	24222077	SWITCH,PRESSURE.....	1
14	PAHZZ	5306014763501	7X677	8676222	BOLT,MACHINE 6 X 1 MM.....	6
15	PAHZZ	4710014779034	7X677	8678342	TUBE,BENT METALLIC 1996.....	1
15	PAHZZ	4710014779032	7X677	24204275	TUBE,BENT METALLIC 1997,98,99,00...	1
16	PAHZZ	5306014763500	7X677	11515262	BOLT,MACHINE 6 X 1 X 55 MM.....	21
* 17	PAHZZ	5340014939134	7X677	8675537	CLAMP,RETAINING 1996.....	1
* 17	PAHZZ	5340014917497	7X677	24204276	CLIP,RETAINING 1997,98,99,00.....	1
18	PAHZZ	5306014746117	24617	11503870	BOLT,MACHINE 1996.....	1
19	PAHZZ	5340014789995	7X677	8675538	CLIP,RETAINING 1996.....	1
20	PAHZZ	2520014565256	7X677	24201116	STOP,OIL DIPSTICK 1996.....	1
21	PAHZZ	5340014744002	7X677	8676418	CLIP,SPRING TENSION.....	1
22	PAHZZ	5360014698077	7X677	8675634	SPRING,HELICAL COMP.....	1
* 23	KFHZZ		7X677	24206025	PISTON PART OF KIT P/N 24206749.....	1
24	KFHZZ		7X677	24206024	PIN,STRAIGHT HEADLE PART OF KIT P/N 24206749.....	1
25	KFHZZ		7X677	8661829	GASKET PART OF KIT P/N 24205251,PART OF KIT P/N 24202111,PART OF KIT P/N 24204111,PART OF KIT P/N 24210955...	1

END OF FIGURE

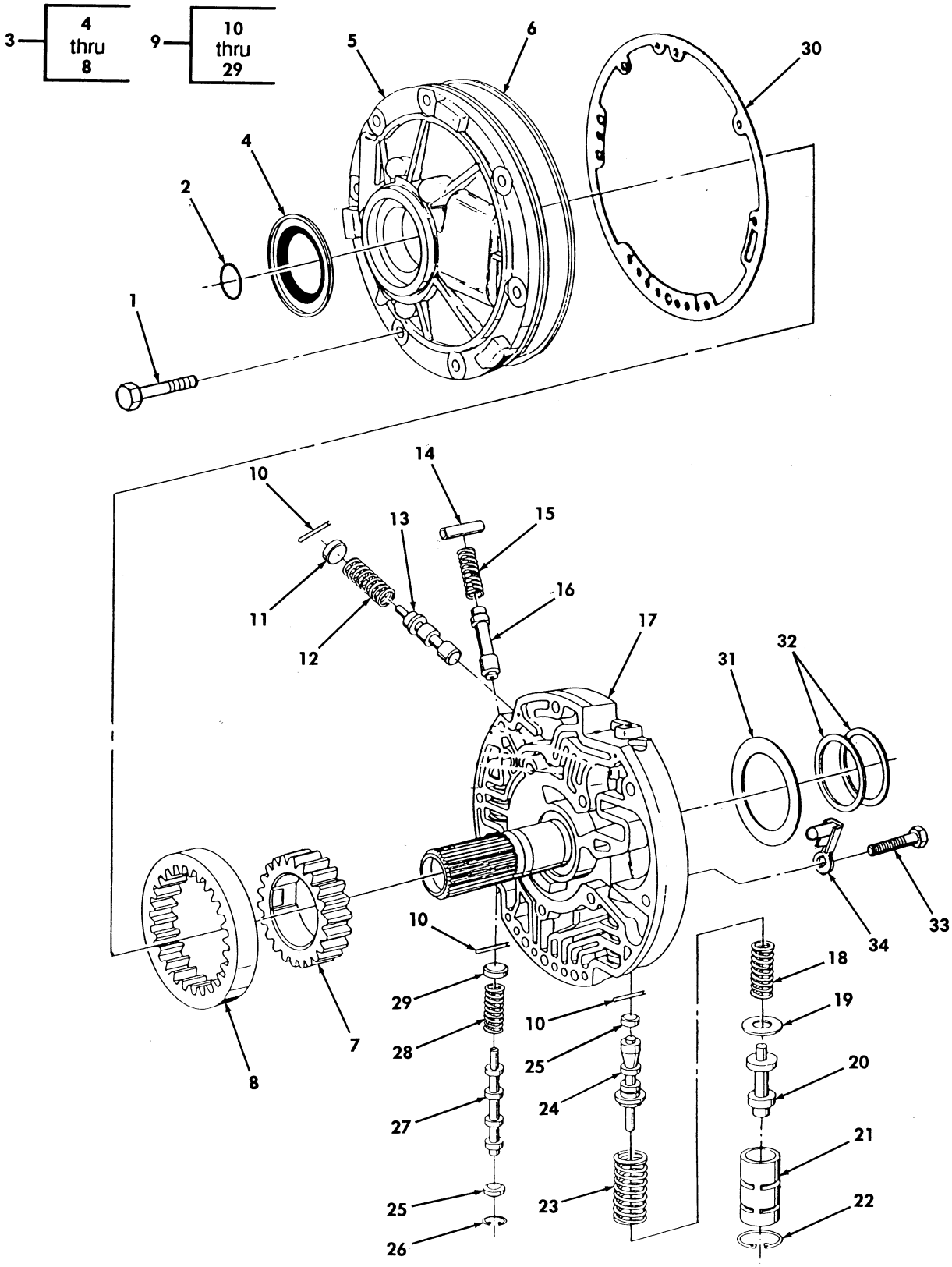

Figure 98. Transmission Oil Pump.

(1) ITEM NO	(2) SMR CODE	(3) NSN	(4) CAGEC	(5) PART NUMBER	(6) DESCRIPTION AND USABLE ON CODES(UOC)	(7) QTY
					GROUP 0721 COOLERS,PUMPS,MOTORS	
					FIG. 98 TRANSMISSON OIL PUMP	
1	PAHZZ	5306014111596	7X677	8661792	BOLT,MACHINE PART OF KIT P/N 24205251 PART OF KIT P/N 24202111 PART OF KIT P/N 24204441 PART OF KIT P/N 24210955 PART OF KIT P/N 24210954.....	7
2	PAHZZ	5330014146607	7X677	8661760	SEAL,PLAIN.....	1
3	PAHHH	4320013982069	7X677	24208852	PUMP,ROTARY 1996.....	1
3	PAHHH	4320014857480	7X677	24211287	PUMP,ROTARY 1997,98,99,00.....	1
4	PAHZZ	5330013791139	7X677	8661602	.SEAL,PLAIN PART OF KIT P/N 24202111,PART OF KIT P/N 24204441..	1
5	XAHZZ		7X677	8682194	.BODY,OIL PUMP 1996.....	1
5	XAHZZ		7X677	24205778	.BODY,OIL PUMP 1997,98,99,00.....	1
6	PAHZZ	5330013240906	7X677	8654716	.SEAL,PLAIN ENCASED 1995,96.....	1
6	PAHZZ		7X677	24210605	.SEAL,PLAIN ENCASED 1997,98,99,00,.	1
7	XAHZZ		7X677	8661682	.GEAR 1995,96.....	1
7	XAHZZ		7X677	24205786	.GEAR 1997,98.....	1
8	XAHZZ		7X677	8661683	.GEAR.....	1
9	PAHHH		7X677	24205398	COVER ASSEMBLY,TRAN 1996.....	1
9	PAHHH	2520014658809	7X677	24204303	COVER ASSEMBLY,TRAN 1997,98,99,00..	1
10	PAHZZ	5315014618374	7X677	8661838	.PIN,STRAIGHT,HEADLE.....	3
11	PAHZZ	5340014777052	7X677	8682858	.PLUG,EXPANSION.....	1
12	PAHZZ	5360014609068	7X677	8678258	.SPRING,HELICAL,COMP.....	1
13	PAHZZ	4820014609991	7X677	8678257	.VALVE,LINEAR,DIRECT.....	1
14	PAHZZ	5315014615649	7X677	8661768	.PIN,STRAIGHT,HEADLE.....	1
15	PFHZZ	5360014087977	7X677	8661767	.SPRING,HELICAL,COMP.....	1
16	PAHZZ	4810014609975	7X677	8661766	.SLIDE,DIRECTIONAL C.....	1
17	XAHZZ		7X677	24202681	.COVER,PUMP 1995,96.....	1
17	XAHZZ		7X677	24204304	.COVER,PUMP 1997,98.....	1
18	PAHZZ	5360014609073	7X677	8680551	.SPRING,HELICAL,COMP.....	1
19	PAHZZ	3120014616680	7X677	8680548	.BEARING,WASHER,THRU.....	1
20	PAHZZ	4820014610011	7X677	8680549	.VALVE,LINEAR,DIRECT.....	1
21	PAHZZ	5340014608361	7X677	8682856	.BUSHING.....	1
22	PAHZZ	5325014776608	7X677	8679465	.RING,RETAINING.....	1
23	PAHZZ	5360014609070	7X677	8661798	.SPRING,HELICAL,COMP.....	1
24	PAHZZ	4820014608288	7X677	8680547	.SLIDE,DIRECTIONAL C.....	1
25	PAHZZ	2520014615133	7X677	8682855	.PLUG,TRANSMISSION O.....	2
26	PAHZA	2010009375599	73342	274267	.RING REDUCTION,GEAR.....	1
27	PAHZZ	4820014609988	7X677	8681070	.VALVE,LINEAR,DIRECT.....	1
28	PAHZZ	5360014609072	7X677	8681069	.SPRING,HELICAL,COMP.....	1
29	PAHZZ	2520014615648	7X677	8682857	.PLUG,TRANSMISSION V.....	1
30	PAHZZ	5330014091665	7X677	8677782	GASKET PART OF KIT P/N 24205251, PART OF KIT P/N 24202111.....	1
31	PAHZZ	3120014616679	7X677	8677571	BEARING,WASHER,THRU .059.....	1
31	PAHZZ	3120014717844	7X677	8677572	BEARING,WASHER,THRU .075.....	1
31	PAHZZ	3120014115783	7X677	8677573	BEARING,WASHER,THRU .091.....	1
31	PAHZZ	3120014115787	7X677	8677574	BEARING,WASHER,THRU .107.....	1
31	PAHZZ	3120014616677	7X677	8677575	BEARING,WASHER,THRU .123.....	1

(1) ITEM NO	(2) SMR CODE	(3) NSN	(4) CAGEC	(5) PART NUMBER	(6) DESCRIPTION AND USABLE ON CODES(UOC)	(7) QTY
32	PAHZA	5331014627294	7X677	8661789	O-RING 1996,97 PART OF KIT P/N 24204441 PART OF KIT P/N 24205251...	2
32	PAHZZ	5331014776762	7X677	24205833	O-RING 1998,99,00 PART OF KIT P/N 24210954.....	2
33	PAHZZ	5306011501190	72582	11500921	BOLT,MACHINE.....	5
34	PAHZZ	4320014566258	7X677	24200357	SHIELD,VENT.....	1

END OF FIGURE

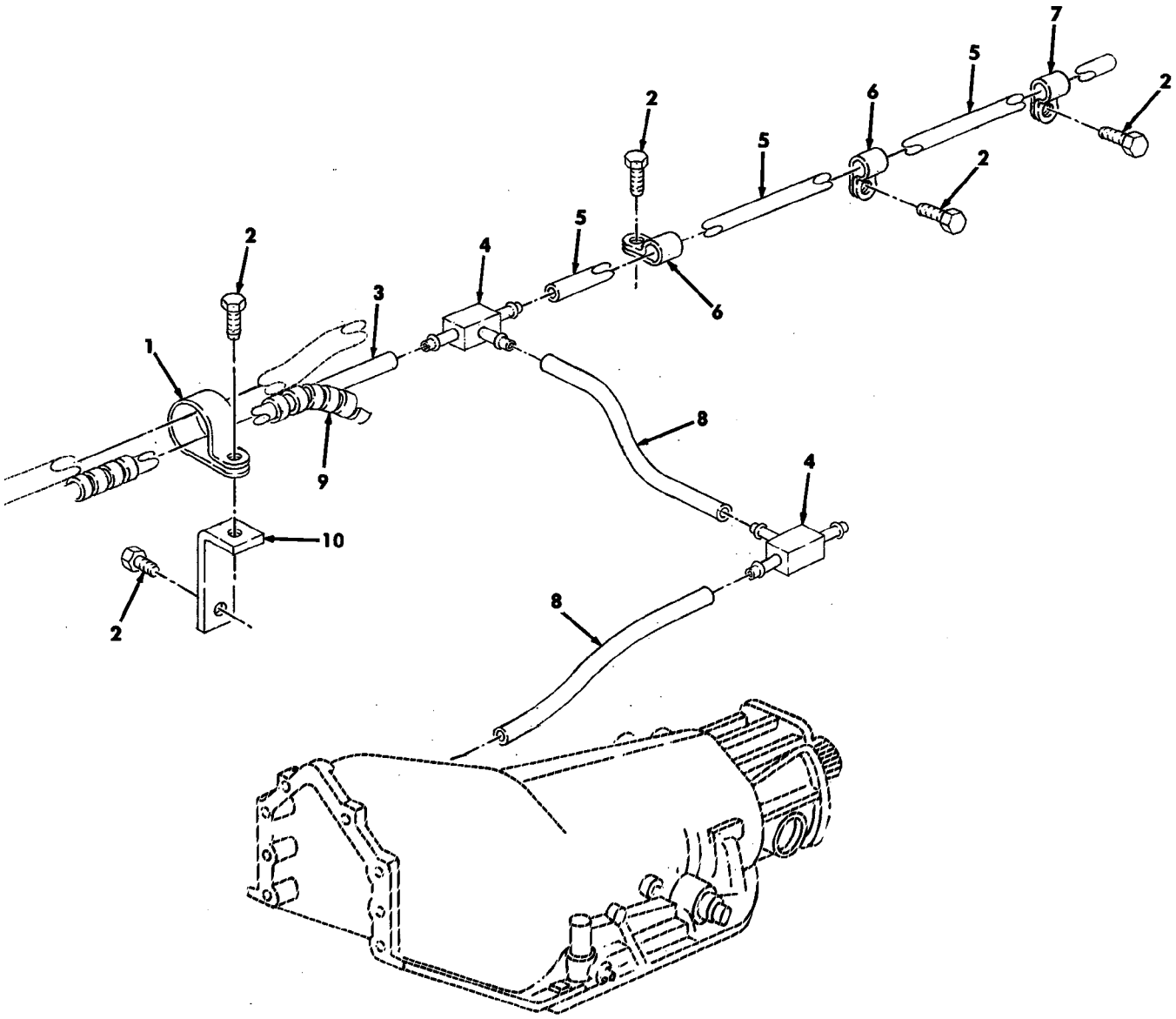

Figure 99. Transmission Vent Lines and Attaching Hardware (Serial Number 299999 and Below).

(1) ITEM NO	(2) SMR CODE	(3) NSN	(4) CAGEC	(5) PART NUMBER	(6) DESCRIPTION AND USABLE ON CODES(UOC)	(7) QTY
					GROUP 0721 COOLERS,PUMPS,MOTORS	
					FIG. 99 TRANSMISSION VENT LINES AND ATTACHING HARDWARE(SERIAL NUMBER 299999 AND BELOW)	
1	PAOZZ	5340008333049	96906	MS21333-127	CLAMP,LOOP.....	1
2	PAOZZ	5305013936311	24617	271153	SCREW,TAPPING 3/8-16 X .750.....	5
3	MOOZZ		34623	5591253	TUBE MAKE FROM TUBE,P/N CPR104420-1,41 INCHES LONG.....	1
4	PAOZZ	4730010035105	79470	1064X4	TEE,HOSE.....	2
5	MOOZZ		34623	5591168	TUBE MAKE FROM TUBE,P/N CPR104420-1,62 INCHES LONG.....	1
6	PAOZZ	5340009891771	80205	MS21333-123	CLAMP,LOOP.....	2
7	PAOZZ	5340000509077	96906	MS21333-119	CLAMP,LOOP.....	1
8	MOOZZ		34623	5582642	TUBE MAKE FROM TUBE,P/N CPR104420-1,11 INCHES LONG.....	2
9	PAOZZ	5640014791272	34623	6005714	INSULATION SLEEVING.....	1
10	PAOZZ	5340011922256	19207	12338663	BRACKET,ANGLE.....	1

END OF FIGURE

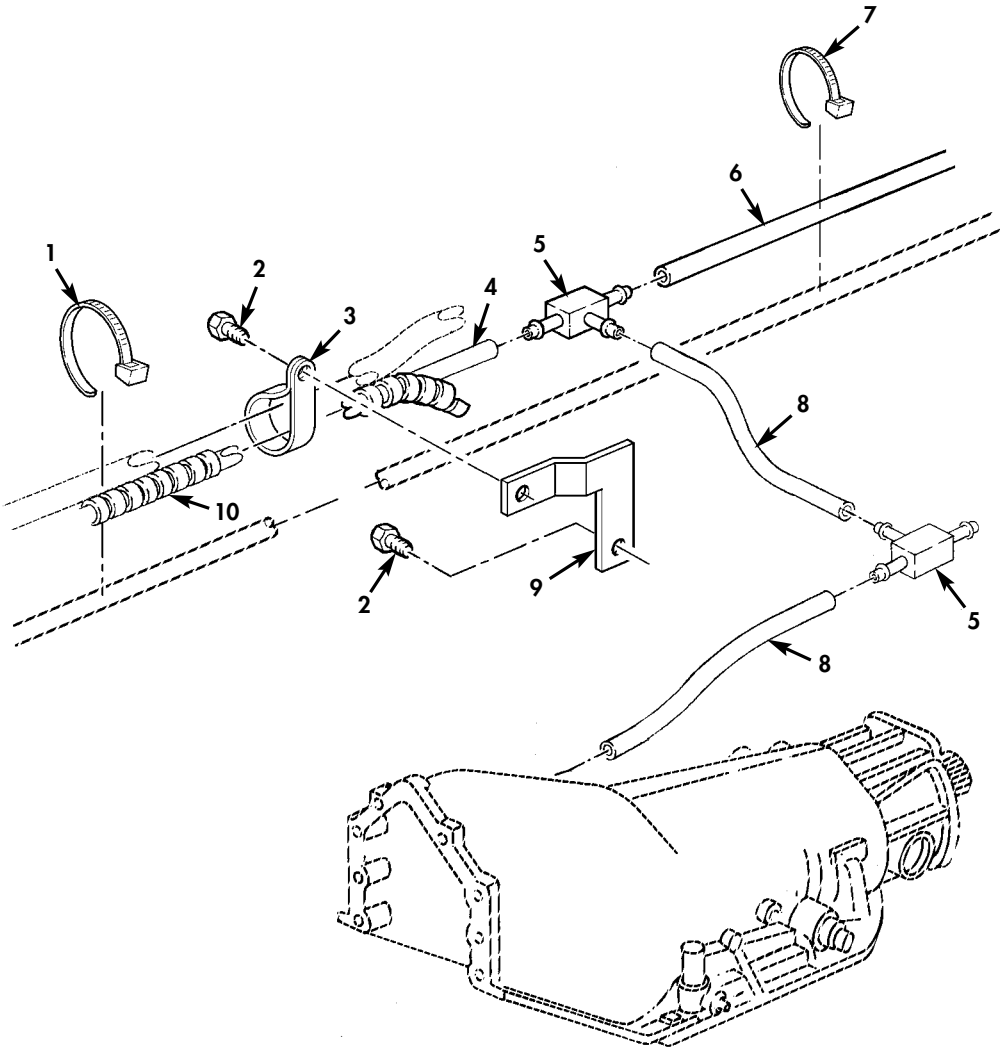

Figure 99A. Transmission Vent Lines and Attaching Hardware (Serial Number 300000 and Above).

(1) ITEM NO	(2) SMR CODE	(3) NSN	(4) CAGEC	(5) PART NUMBER	(6) DESCRIPTION AND USABLE ON CODES(UOC)	(7) QTY
					GROUP 0721 COOLERS,PUMP,MOTORS	
					FIG. 99A TRANSMISSION VENT LINES AND ATTACHING HARDWARE(SERIAL NUMBER 300000 AND ABOVE)	
* 1	PAOZZ	5975015179077	06641	PTL21-C76	STRAP,TIEDOWN ELECT..... UOC:TTA,TTT,TT1,UUA,UUU,UU1,UU2	3
* 2	PAOZZ	5305013936311	24617	271153	SCREW,TAPPING 3/8-16 X 5/8..... UOC:TTA,TTT,TT1,UUA,UUU,UU1,UU2	2
* 3	PAOZZ	5340007255280	80205	MS21333-125	CLAMP,LOOP..... UOC:TTA,TTT,TT1,UUA,UUU,UU1,UU2	1
* 4	MOOZZ		19207	CPR104420-1-41IN	TUBE MAKE FROM TUBING,NONMETALLIC P/N CPR104420-1,41 INCHES LONG..... UOC:TTA,TTT,TT1,UUA,UUU,UU1,UU2	1
* 5	PAOZZ	4730010035105	93061	224-4-4-5/32	TEE,HOSE..... UOC:TTA,TTT,TT1,UUA,UUU,UU1,UU2	2
* 6	MOOZZ		19207	CPR104420-1-62IN	TUBE MAKE FROM TUBING,NONMETALLIC P/N CPR104420-1,62 INCHES LONG..... UOC:TTA,TTT,TT1,UUA,UUU,UU1,UU2	1
* 7	PAOZZ	5975009856630	96906	MS3367-3-0	STRAP,TIEDOWN,ELECT..... UOC:TTA,TTT,TT1,UUA,UUU,UU1,UU2	5
* 8	MOOZZ		19207	CPR104420-1-11IN	TUBE MAKE FROM TUBING, NONMETALLIC P/N CPR104420-1,11 INCHES LONG..... UOC:TTA,TTT,TT1,UUA,UUU,UU1,UU2	2
* 9	PAOZZ	5340014120867	19207	12447165	BRACKET,MOUNTING..... UOC:TTA,TTT,TT1,UUA,UUU,UU1,UU2	1
* 10	PAOZZ	5640014791272	34623	6005714	INSULATION SLEEVING..... UOC:TTA,TTT,TT1,UUA,UUU,UU1,UU2	1

END OF FIGURE

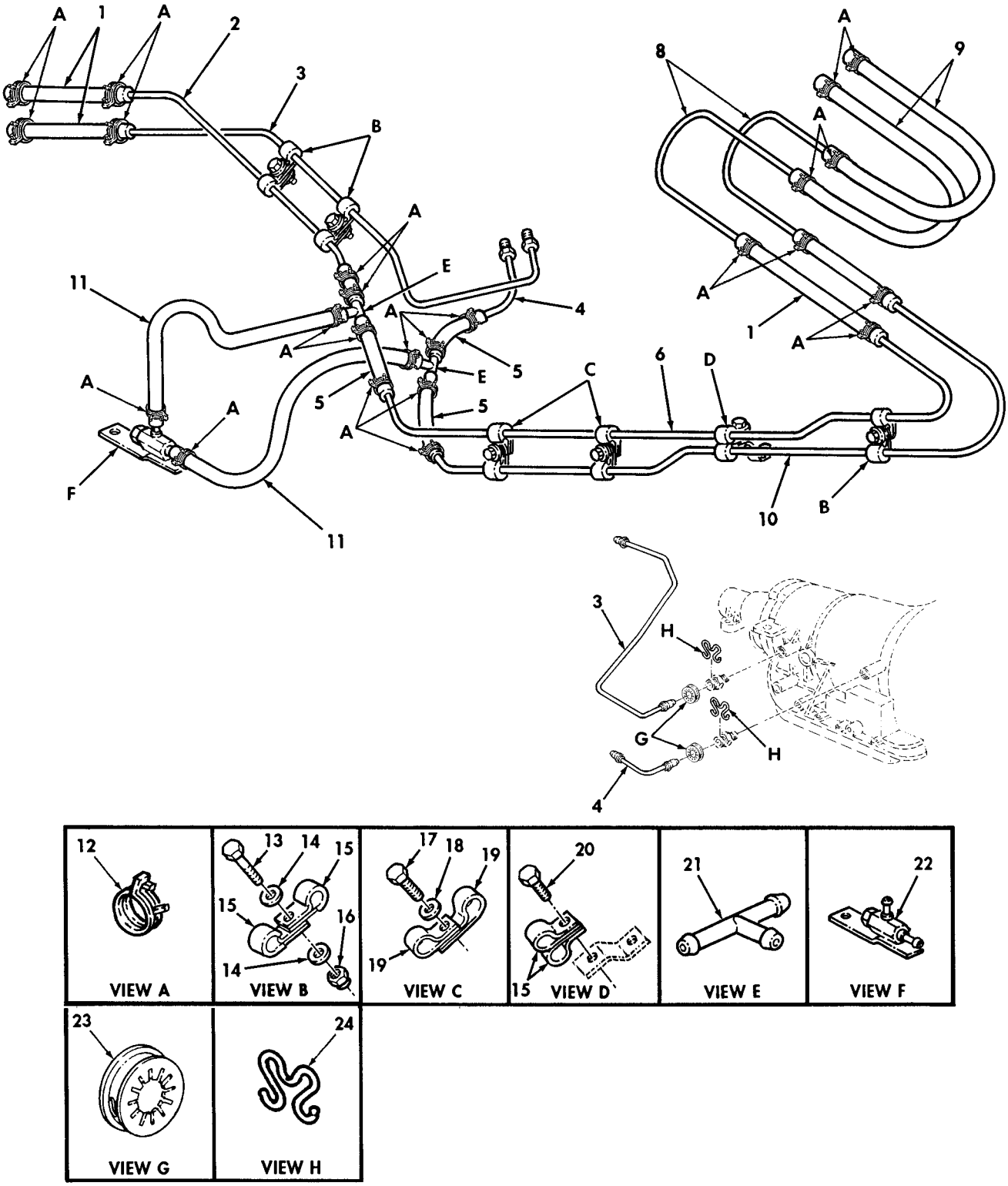

Figure 100. Transmission/Transfer Cooling Lines (Serial Number 299999 and Below).

(1) ITEM NO	(2) SMR CODE	(3) NSN	(4) CAGEC	(5) PART NUMBER	(6) DESCRIPTION AND USABLE ON CODES(UOC)	(7) QTY
					GROUP 0721 COOLERS,PUMPS,MOTORS	
					FIG. 100 TRANSMISSION/TRANSFER COOLING LINES(SERIAL NUMBER 299999 AND BELOW)	
* 1	MOOZZ		34623	5582479	HOSE MAKE FROM HOSE P/N 5741209, 3 INCHES LONG.....	3
2	PAOZZ	4710011890705	34623	12338333	TUBE,BENT METALLIC REAR.....	1
3	PAOZZ	4710014092508	34623	6002779	TUBE ASSEMBLY,METAL 1996.....	1
3	PAOZZ	4710014398167	19207	12460493	TUBE,BENT METALLIC 1997 AND ABOVE PART OF KIT P/N 57K3522 PART OF KIT P/N 57K3540 PART OF KIT P/N 57K3548 PART OF KIT P/N 57K3599 PART OF KIT P/N 57K3570.....	1
4	PAOZZ	4710014092504	34623	6002771	TUBE ASSEMBLY,METAL 1996.....	1
4	PAOZZ	4710014398165	19207	12460492	TUBE,BENT METALLIC 1997 AND ABOVE PART OF KIT P/N 57K3522 PART OF KIT P/N 57K3540 PART OF KIT P/N 57K3548 PART OF KIT P/N 57K3599 PART OF KIT P/N 57K3570.....	1
* 5	MOOZZ		19207	12447073	HOSE MAKE FROM HOSE P/N 5741209, 4 INCHES LONG.....	4
6	PAOZZ	4710011883515	34623	5582819	TUBE,BENT METALLIC FRONT.....	1
* 7	MOOZZ		19207	12338330-4	HOSE,NONMETALLIC MAKE FROM HOSE P/N 5741209,5.25 INCHES LONG.....	1
8	PAOZZ	4710014731708	34623	EX4619	TUBE,BENT METALLIC.....	1
9	MOOZZ		19207	12338330-14	TUBE,NONMETALLIC MAKE FROM TUBE P/N RCSK17769-5,LENGTH AS REQUIRED.....	2
10	PAOZZ	4710011883516	34623	5582817	TUBE,BENT METALLIC FRONT.....	1
* 11	MOOZZ		34623	12338330-2	HOSE,NONMETALLIC MAKE FROM HOSE P/N 5741209,7.25 INCHES LONG.....	2
12	PAOZZ	5340014732692	34623	6008528	CLAMP,LOOP.....	24
13	PAOZZ	5305000680502	96906	MS90725-6	SCREW,CAP,HEXAGON H 1/4-20 X 3/4...	3
14	PAOZZ	5310011023270	24617	2436161	WASHER,FLAT 1/4.....	6
15	PAOZZ	5340018091492	81348	CMDX2-3PT573036	CLAMP,LOOP.....	8
16	PAOZZ	5310000614650	96906	M45913/3-4CG8Z	NUT,SELF-LOCKING,HE 1/4-20.....	3
17	PAOZZ	5305012364349	7X677	172482	SCREW,TAPPING 3/8-16 X 5/8.....	2
18	PAOZZ	5310006379541	96906	MS35338-46	WASHER,LOCK 3/8.....	2
19	PAOZZ	5340009546014	96906	MS21333-121	CLAMP,LOOP.....	4
20	PAOZZ	5305010846067	96906	MS51871-1	SCREW,TAPPING 1/4-20 X 1/2.....	1
21	PAOZZ	4730014091204	34623	12447077	TEE,HOSE.....	2
22	PAOZZ	4820014566257	19207	12447076	VALVE,REGULATING,FL.....	1
23	PAOZZ	5340014420308	19207	12460491	COVER,ACCESS 1997 AND ABOVE..... PART OF KIT P/N 57K3522 PART OF KIT P/N 57K3540 PART OF KIT P/N 57K3548 PART OF KIT P/N 57K3599 PART OF KIT P/N 57K3570.....	2
24	PAOZZ	5340014744011	7X677	24205103	CLIP,RETAINING.....	2

END OF FIGURE

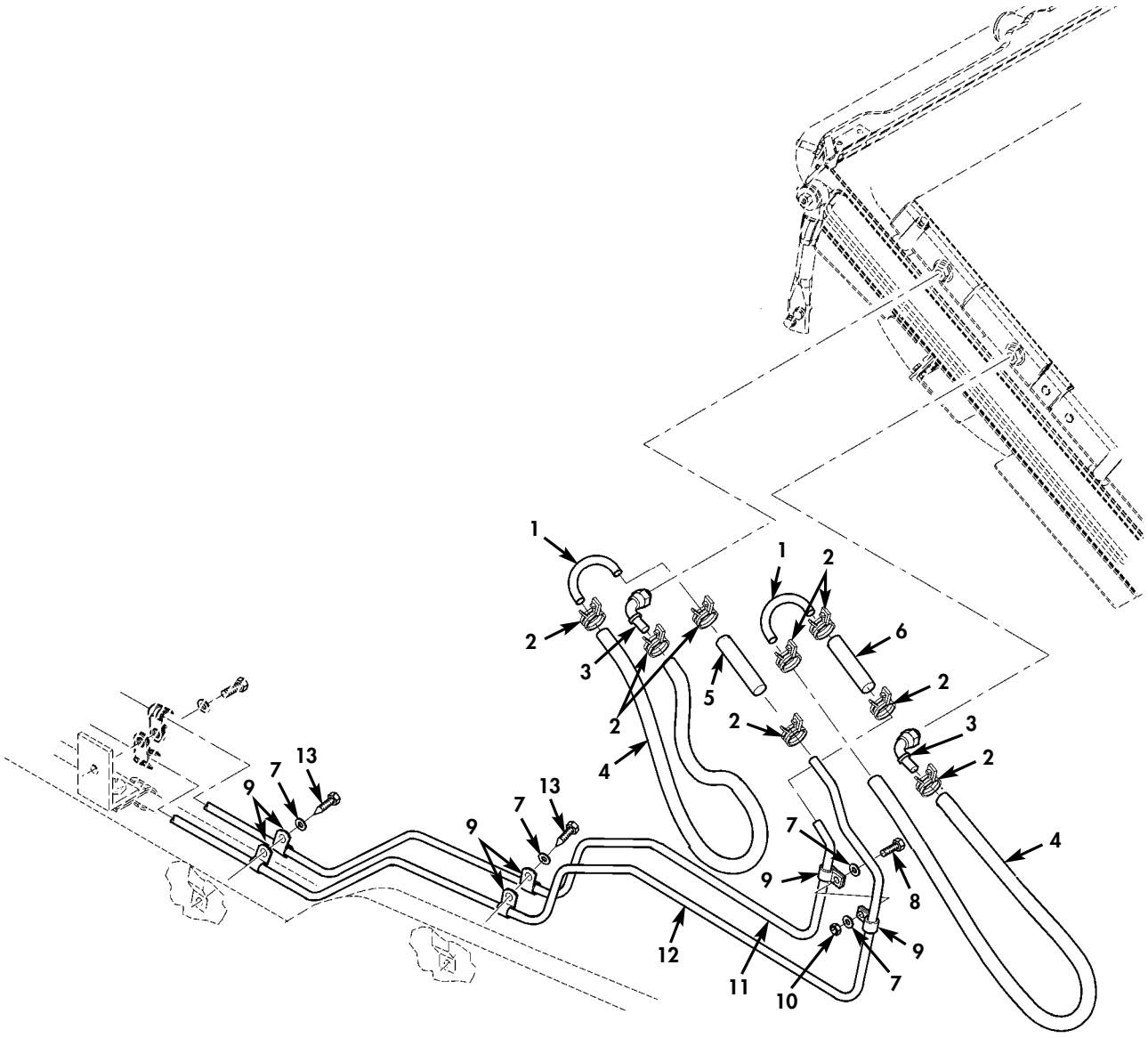

Figure 100A. Transmission Oil Cooler Lines (Serial Number 300000 and Above) (Sheet 1 of 2).

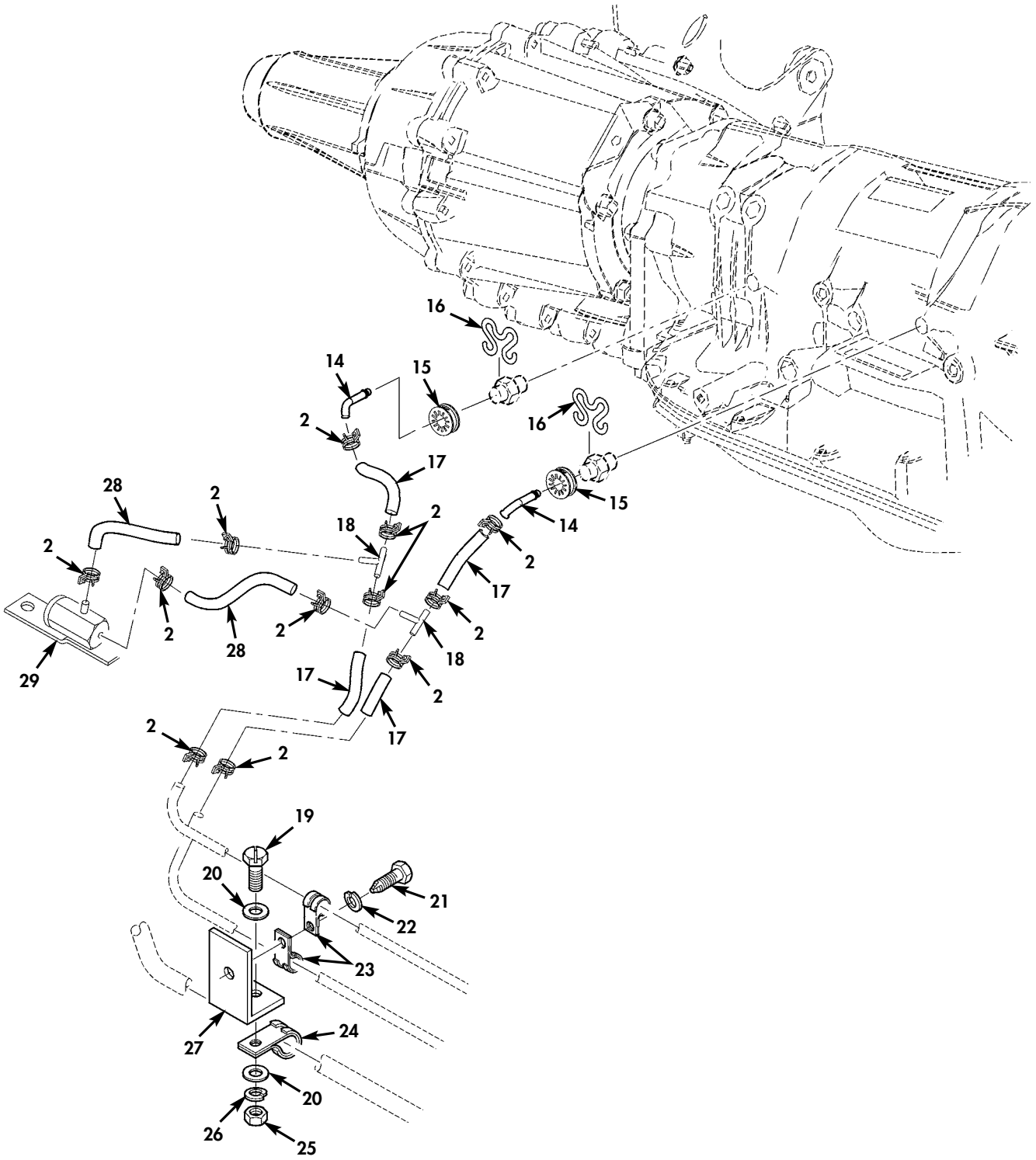

Figure 100A. Transmission Oil Cooler Lines (Serial Number 300000 and Above) (Sheet 2 of 2).

(1) ITEM NO	(2) SMR CODE	(3) NSN	(4) CAGEC	(5) PART NUMBER	(6) DESCRIPTION AND USABLE ON CODES(UOC)	(7) QTY
					GROUP 0721 COOLERS,PUMPS,MOTORS	
					FIG. 100A TRANSMISSION OIL COOLER LINES(SERIAL NUMBER 300000 AND ABOVE)	
* 1	PAOZZ	4710014731708	19207	12469380	TUBE,BENT,METALLIC..... UOC:TTA,TTT,TT1,UUA,UUU,UU1,UU2	2
* 2	PAOZZ	5340014732692	34623	6008528	CLAMP,LOOP..... UOC:TTA,TTT,TT1,UUA,UUU,UU1,UU2	20
* 3	PAOZZ	4730012217320	87373	33982-6-6	ELBOW,TUBE TO HOSE..... UOC:TTA,TTT,TT1,UUA,UUU,UU1,UU2	2
* 4	MOOZZ		19207	12338330-14-23.5 IN	HOSE,NONMETALLIC MAKE FROM HOSE P/N 5741209,23.5 INCHES LONG..... UOC:TTA,TTT,TT1,UUA,UUU,UU1,UU2	2
* 5	MOOZZ		19207	12338330-1	HOSE,NONMETALLIC MAKE FROM HOSE P/N 5741209,3 INCHES LONG..... UOC:TTA,TTT,TT1,UUA,UUU,UU1,UU2	1
* 6	MOOZZ		19207	12338330-4	HOSE,NONMETALLIC MAKE FROM HOSE P/N 5741209,5.25 INCHES LONG..... UOC:TTA,TTT,TT1,UUA,UUU,UU1,UU2	1
* 7	PAOZZ	5310011023270	34623	2436161	WASHER,FLAT 1/4..... UOC:TTA,TTT,TT1,UUA,UUU,UU1,UU2	4
* 8	PAOZZ	5305000680508	80204	B1821BH025C075N	SCREW,CAP,HEXAGON H 1/4-20 X 3/4... UOC:TTA,TTT,TT1,UUA,UUU,UU1,UU2	1
* 9	PAOZZ	5340008091492	80205	MS21333-100	CLAMP,LOOP..... UOC:TTA,TTT,TT1,UUA,UUU,UU1,UU2	6
* 10	PAOZZ	5310000614650	81349	M45913/3-4CG8C	NUT,SELF-LOCKING,HE 1/4-20..... UOC:TTA,TTT,TT1,UUA,UUU,UU1,UU2	1
* 11	PAOZZ	4710011883516	34623	5582817	TUBE,BENT,METALLIC..... UOC:TTA,TTT,TT1,UUA,UUU,UU1,UU2	1
* 12	PAOZZ	4710011883515	34623	5582819	TUBE,BENT,METALLIC..... UOC:TTA,TTT,TT1,UUA,UUU,UU1,UU2	1
* 13	PAOZZ	5305012727422	12361	7-790-140853	SCREW,TAPPING 1/4-20 X 1/2..... UOC:TTA,TTT,TT1,UUA,UUU,UU1,UU2	2
* 14	PAOZZ	4710014398165	34623	EC-06008597	TUBE,BENT,METALLIC..... UOC:TTA,TTT,TT1,UUA,UUU,UU1,UU2	2
* 15	PAOZZ	5340014420308	34623	6008953	COVER,ACCESS..... UOC:TTA,TTT,TT1,UUA,UUU,UU1,UU2	2
* 16	PAOZZ	5340014744011	7X677	24205103	CLIP,RETAINING..... UOC:TTA,TTT,TT1,UUA,UUU,UU1,UU2	2
* 17	MOOZZ		34623	12447073	HOSE,NONMETALLIC MAKE FROM HOSE P/N 5741209,4.00 INCHES LONG..... UOC:TTA,TTT,TT1,UUA,UUU,UU1,UU2	4
* 18	PAOZZ	4730014091204	34623	12447077	TEE,HOSE..... UOC:TTA,TTT,TT1,UUA,UUU,UU1,UU2	2
* 19	PAOZZ	5305010062053	96906	MS51849-75	SCREW,MACHINE 10-24 X 5/8..... UOC:TTA,TTT,TT1,UUA,UUU,UU1,UU2	2
* 20	PAOZZ	5310004022778	24617	9416128	WASHER,FLAT 10..... UOC:TTA,TTT,TT1,UUA,UUU,UU1,UU2	4
* 21	PAOZZ	5305012364349	7X677	172482	SCREW,TAPPING 3/8-16 X 5/8..... UOC:TTA,TTT,TT1,UUA,UUU,UU1,UU2	2
* 22	PAOZZ	5310000045033	80205	MS35338-46	WASHER,LOCK 3/8.....	2

(1) ITEM NO	(2) SMR CODE	(3) NSN	(4) CAGEC	(5) PART NUMBER	(6) DESCRIPTION AND USABLE ON CODES(UOC)	(7) QTY
					UOC:TTA,TTT,TT1,UUA,UUU,UU1,UU2	
* 23	PAOZZ	5340009546014	80205	MS21333-121	CLAMP,LOOP..... UOC:TTA,TTT,TT1,UUA,UUU,UU1,UU2	4
* 24	PAOZZ	5340000881254	80205	MS21333-104	CLAMP,LOOP..... UOC:TTA,TTT,TT1,UUA,UUU,UU1,UU2	2
* 25	PAOZZ	5310009349758	80205	MS35649-202	NUT,PLAIN,HEXAGON 10-24..... UOC:TTA,TTT,TT1,UUA,UUU,UU1,UU2	2
* 26	PAOZZ	5310007217809	96906	MS35340-43	WASHER,LOCK 10..... UOC:TTA,TTT,TT1,UUA,UUU,UU1,UU2	2
* 27	PFOZZ	2590015658851	34623	6043068	BRACKET,VEHICULAR C FRONT..... UOC:TTA,TTT,TT1,UUA,UUU,UU1,UU2	1
* 27	PFOZZ	2590015658855	34623	6043069	BRACKET,VEHICULAR C REAR..... UOC:TTA,TTT,TT1,UUA,UUU,UU1,UU2	1
* 28	MOOZZ		19207	12338330-2	HOSE,NONMETALLIC MAKE FROM HOSE P/N 5741209,7.25 INCHES LONG..... UOC:TTA,TTT,TT1,UUA,UUU,UU1,UU2	2
* 29	PAOZZ	4820014566257	19207	12447076	VALVE,REGULATING,FL..... UOC:TTA,TTT,TT1,UUA,UUU,UU1,UU2	1

END OF FIGURE

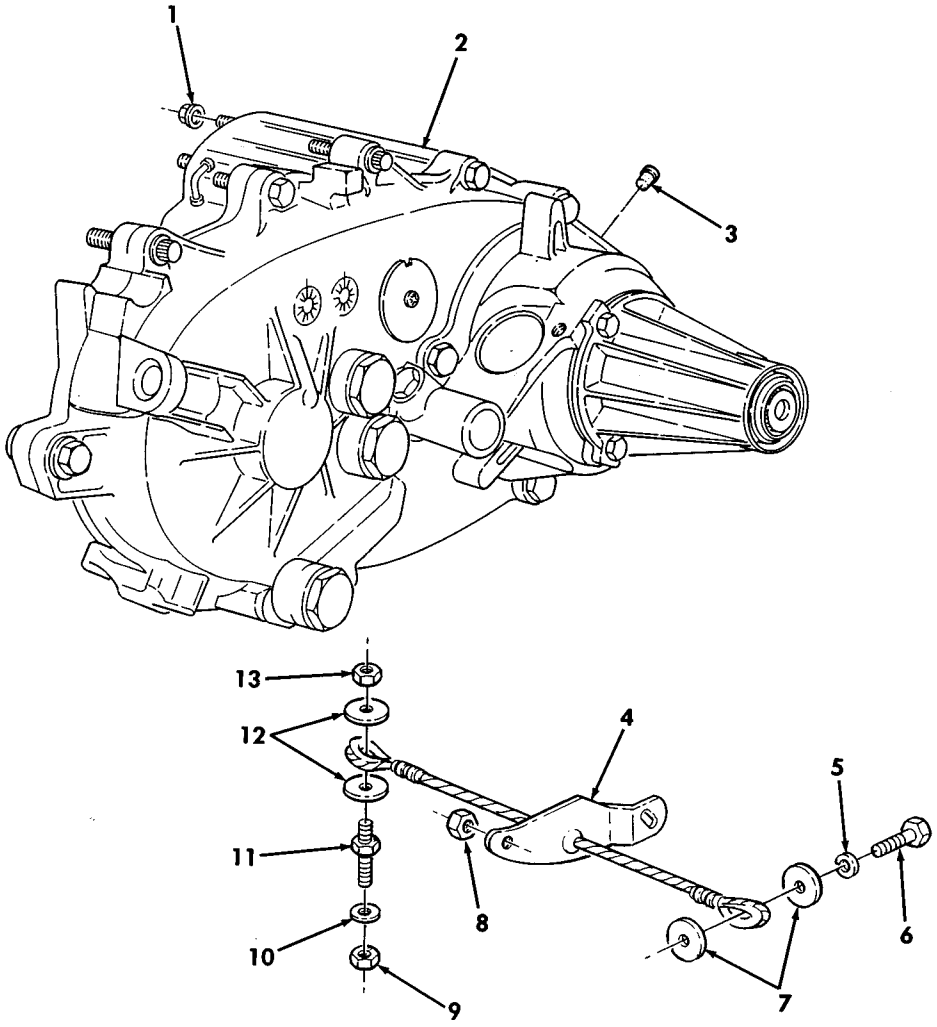

FOR BREAKDOWN OF ITEM 2,
SEE FIGURE 102

Figure 101. Transfer Assembly (Serial Number 299999 and Below).

(1) ITEM NO	(2) SMR CODE	(3) NSN	(4) CAGEC	(5) PART NUMBER	(6) DESCRIPTION AND USABLE ON CODES(UOC)	(7) QTY
					GROUP 08 TRANSFER AND FINAL DRIVE ASSEMBLY	
					0801 POWER TRANSFER,FINAL DRIVE, PLANETARY OR DROP GEAR BOX ASSEMBLY	
					FIG. 101 TRANSFER ASSEMBLY(SERIAL NUMBER 299999 AND BELOW)	
1	PAFZZ	5310004478774	96906	MS51988-8	NUT,SELF-LOCKING,EX 3/8-24.....	6
2	PAFHH	2520014092512	76760	21908	TRANSFER TRANSMISSI.....	1
3	PAFZZ	5340012906234	76760	15105	PLUG,LEAKPROOF SEAL.....	1
4	PAFZZ	4010014088504	34623	6001009	WIRE ROPE ASSEMBLY.....	1
5	PAFZZ	5310004829493	24617	120384	WASHER,LOCK 1/2.....	1
6	PAFZZ	5305000712070	80204	B1821BH050C175N	SCREW,CAP,HEXAGON H 1/2-13 X 1.75..	1
7	PAFZZ	5310014089593	7X677	9428839	WASHER,FLAT.....	2
8	PAFZZ	5310011430512	73342	29520052	NUT 3/8.....	1
9	PAFZZ	5310000443342	19204	8712289-5	NUT 9/16-12.....	1
10	PAFZZ	5310000685285	96906	MS27183-20	WASHER,FLAT 9/16.....	1
11	PAFZZ	5307014503342	19207	12447177	STUD,SHOULDERED AND.....	1
12	PAFZZ	5310012538437	19207	12340058	WASHER,FLAT.....	2
13	PAFZZ	5310011504003	24617	9422299	NUT,SELF-LOCKING,HE.....	1

END OF FIGURE

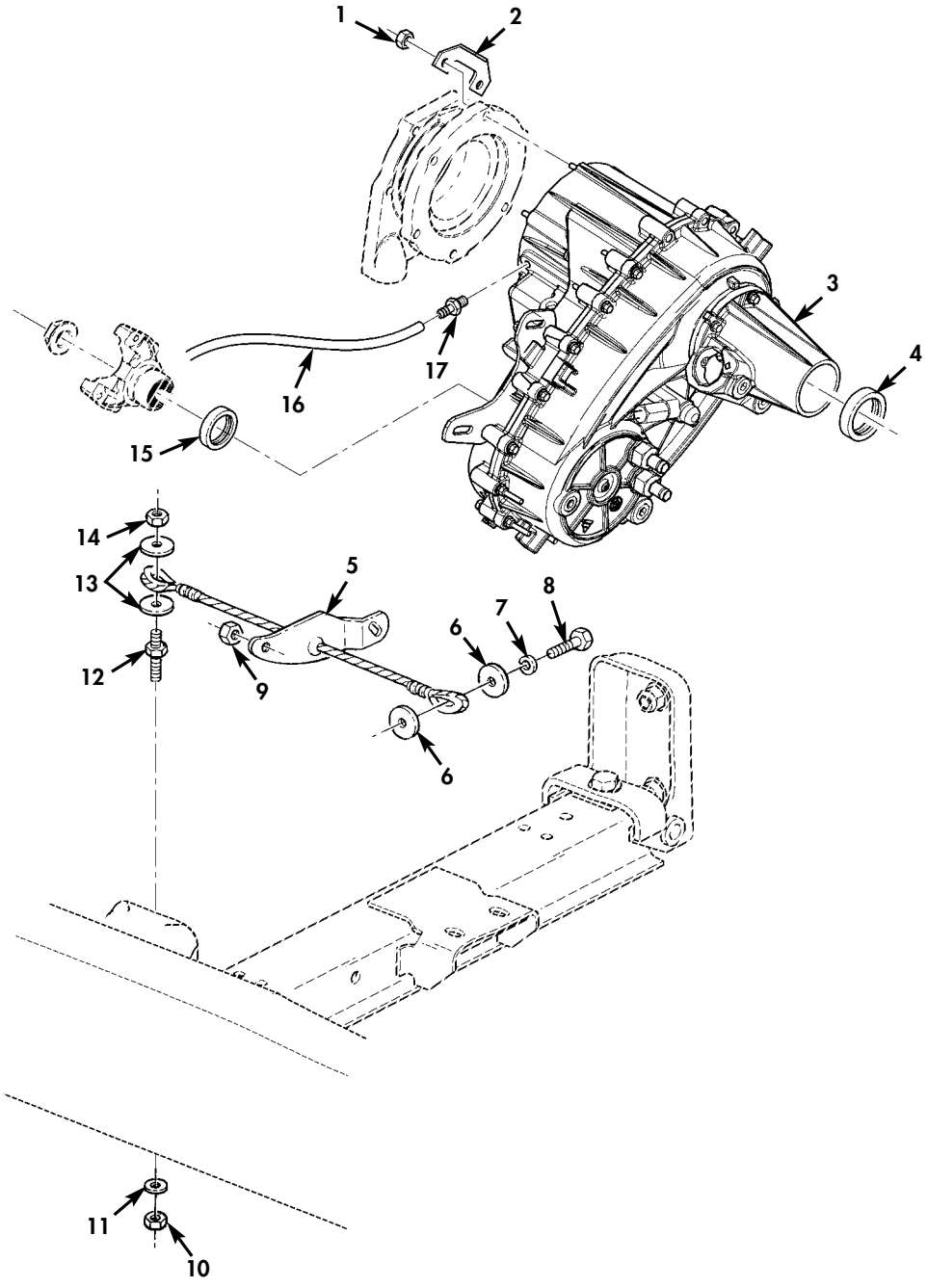

Figure 101A. Transfer Assembly (Serial Number 300000 and Above).

(1) ITEM NO	(2) SMR CODE	(3) NSN	(4) CAGEC	(5) PART NUMBER	(6) DESCRIPTION AND USABLE ON CODES(UOC)	(7) QTY
					GROUP 0801 POWER TRANSFER AND FINAL DRIVE ASSEMBLIES	
					FIG. 101A TRANSFER ASSEMBLY(SERIAL NUMBER 300000 AND ABOVE)	
* 1	PAFZZ	5310004478774	96906	MS51988-8	NUT,SELF-LOCKING,EX 3/8-24..... UOC:TTA,TTT,TT1,UUA,UUU,UU1,UU2	2
* 2	PFFZZ	5340015662601	34623	6032857	BRACKET,MOUNTING..... UOC:TTA,TTT,TT1,UUA,UUU,UU1,UU2	1
* 3	PAFHH	2520015715785	76760	54815	TRANSFER TRANSMISSI..... UOC:TTA,TTT,TT1,UUA,UUU,UU1,UU2	1
* 4	PAHZZ	5330013589540	76760	16104	SEAL,PLAIN REAR OUT..... UOC:TTA,TTT,TT1,UUA,UUU,UU1,UU2	1
* 5	PAFZZ	4010015661797	34623	6033410	WIRE ROPE ASSEMBLY..... UOC:TTA,TTT,TT1,UUA,UUU,UU1,UU2	1
* 6	PAFZZ	5310014089593	7X677	9428839	WASHER,FLAT 1/2..... UOC:TTA,TTT,TT1,UUA,UUU,UU1,UU2	2
* 7	PAFZZ	5310000116121	96906	MS35338-67	WASHER,LOCK 1/2..... UOC:TTA,TTT,TT1,UUA,UUU,UU1,UU2	1
* 8	PAFZZ	5305000712070	80204	B1821BH050C175N	SCREW,CAP,HEXAGON H 1/2-13 X 1.75.. UOC:TTA,TTT,TT1,UUA,UUU,UU1,UU2	1
* 9	PAFZZ	5310011430512	73342	29520052	NUT,SELF-LOCKING,HE 3/8-16..... UOC:TTA,TTT,TT1,UUA,UUU,UU1,UU2	2
* 10	PAFZZ	5310000443342	19204	8712289-5	NUT,SELF-LOCKING,HE 9/16-12..... UOC:TTA,TTT,TT1,UUA,UUU,UU1,UU2	1
* 11	PAFZZ	5310000685285	96906	MS27183-20	WASHER,FLAT 9/16..... UOC:TTA,TTT,TT1,UUA,UUU,UU1,UU2	1
* 12	PAFZZ	5307014503072	19207	12447177	STUD,SHOULDERED 7/16-14 X 3.00..... UOC:TTA,TTT,TT1,UUA,UUU,UU1,UU2	1
* 13	PAFZZ	5310012538437	19207	12340058	WASHER,FLAT 9/16..... UOC:TTA,TTT,TT1,UUA,UUU,UU1,UU2	2
* 14	PAFZZ	5310011504003	24617	9422299	NUT,SELF-LOCKING,HE 7/16-14..... UOC:TTA,TTT,TT1,UUA,UUU,UU1,UU2	1
* 15	PAHZZ	5330014133713	76760	19016	SEAL,PLAIN ENCASED..... UOC:TTA,TTT,TT1,UUA,UUU,UU1,UU2	1
* 16	MOOZZ		19207	CPR104420-1-17	TUBING,NONMETALLIC MAKE FROM TUBING P/N CPR104420-1,17 INCHES LONG..... UOC:TTA,TTT,TT1,UUA,UUU,UU1,UU2	1
* 17	PAFZZ	4730011855348	19207	12339978	ADAPTER,STRAIGHT,PI..... UOC:TTA,TTT,TT1,UUA,UUU,UU1,UU2	1

END OF FIGURE

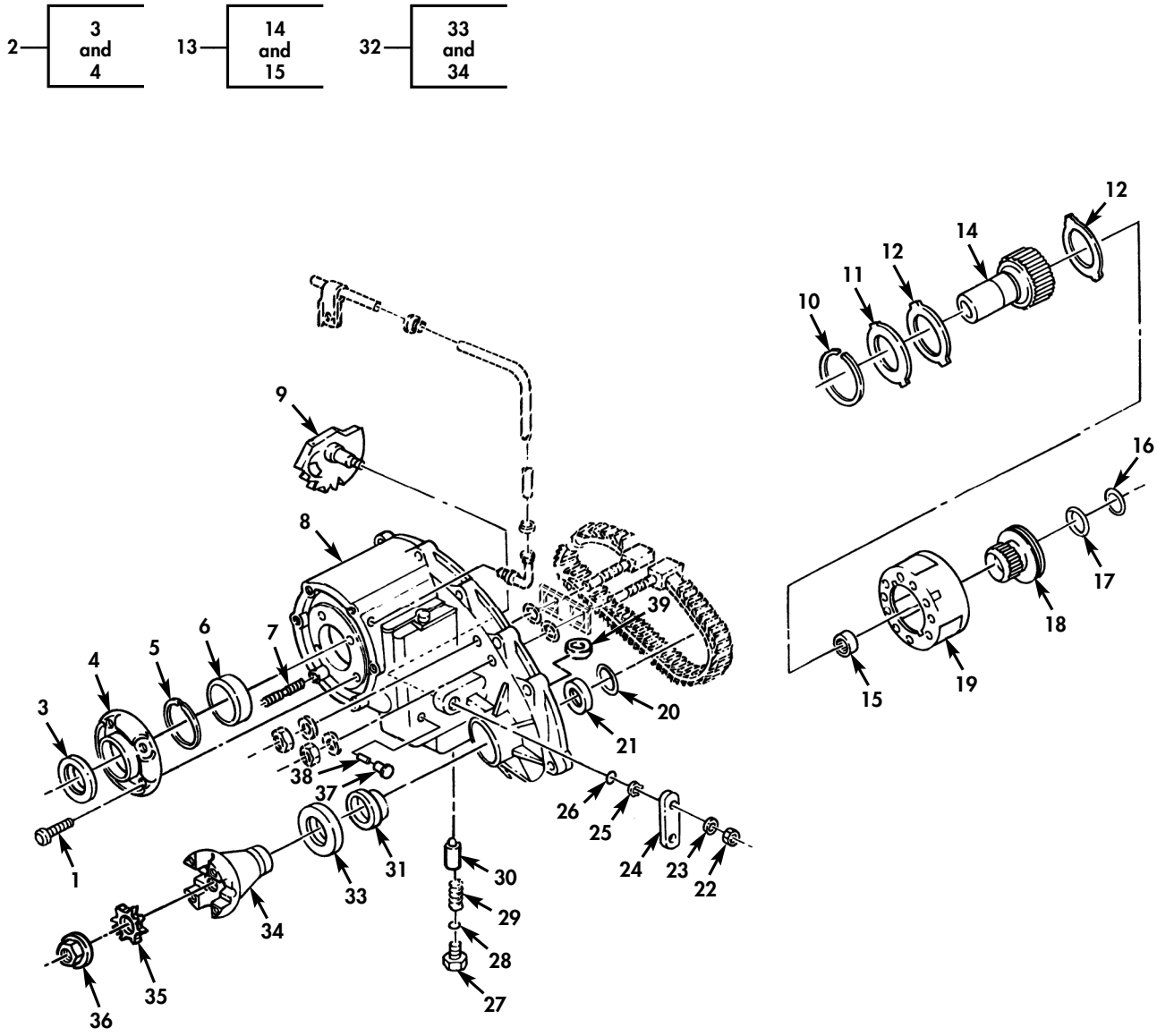

Figure 102. Transfer Case Assembly (Front Half) (Serial Number 299999 and Below).

(1) ITEM NO	(2) SMR CODE	(3) NSN	(4) CAGEC	(5) PART NUMBER	(6) DESCRIPTION AND USABLE ON CODES(UOC)	(7) QTY
					GROUP 0801 POWER TRANSFER,FINAL DRIVE,PLANETARY OR GROUP GEAR BOX ASSEMBLY	
					FIG. 102 TRANSFER CASE ASSEMBLY, (FRONT HALF) (SERIAL NUMBER 299999 AND BELOW)	
1	PAHZZ	5306013594529	76760	6500318	BOLT,MACHINE.....	4
2	PAHHH	2520013588880	76760	16244	RETAINER ASSEMBLY,I.....	1
3	PAHZZ	5330011683870	34623	5740017	.SEAL,PLAIN ENCASED.....	1
4	XAHZZ		76760	16188	.RETAINER.....	1
5	PAHZZ	5325013585450	76760	16243	RING,RETAINING.....	1
6	PAHZZ	3110014138094	76767	1254002	BEARING,BALL,ANNULA.....	1
7	PAHZZ	5307011748640	34623	5740008	STUD,PLAIN.....	6
8	PFHZZ	3040014529065	34623	5714222	HOUSING,MECHANICAL.....	1
9	PAHZZ	2520014131900	34623	5743744	SECTOR ASSEMBLY,TRA.....	1
10	PAHZZ	5325013587958	76760	16397	RING,RETAINING.....	1
11	PAHZZ	5325012055966	7X677	6259194	RING,RETAINING.....	1
12	PAHZZ	3120013601202	34623	5938619	BEARING,WASHER,THRU.....	2
13	PAHHH	2520014131899	76760	21068	GEAR ASSEMBLY,TRANS.....	1
14	XAHZZ		76760	17855	.GEAR,INPUT.....	1
15	PAHZZ	3130013601050	34623	5938621	.BEARING UNIT,PLAIN.....	1
16	PAHZZ	5310013585461	76760	16467	WASHER,FLAT.....	1
17	PAHZZ	5325013587959	76760	16466	RING,RETAINING.....	1
18	PAHZZ	2520014131902	34623	5714229	SLEEVE,CLUTCH,TRANS.....	1
19	PAHZZ	3010014120673	76760	17869	GEAR UNIT,PLANETARY.....	1
20	PAHZZ	5325013587960	76760	89331A	RING,RETAINING.....	1
21	PAHZZ	3130013601051	34623	5938607	BEARING UNIT,PLAIN FRONT.....	1
22	PAHZZ	5310009824908	96906	MS21045-6	NUT,SELF-LOCKING,HE.....	1
23	PAHZZ	5310000806004	96906	MS27183-14	WASHER,FLAT 3/8.....	1
24	PAHZZ	3040013588708	76760	17387	CONNECTING LINK,RIG.....	1
25	PAHZZ	5330011592811	7X677	14037958	RETAINER,PACKING.....	1
26	PAHZZ	5331004510118	10988	A27365	O-RING.....	1
27	PAHZZ	5305013594586	76760	16756	SCREW,CAP,HEXAGON H.....	1
28	PAHZZ	5331013589545	76760	15715	O-RING.....	1
29	PAHZZ	5360013586563	76760	17071	SPRING,HELICAL,COMP.....	1
30	PAHZZ	5340013588000	76760	16754	PLUNGER,DETENT.....	1
31	PAOZZ	5330014133713	76760	19016	SEAL,PLAIN ENCASED.....	1
32	PAOFF	2520011687878	34623	5740013	YOKE AND SLINGER,TR FRONT OUTPUT...	1
33	PAOZZ	2520011494993	34623	5740225	.DEFLECTOR,DIRT AND.....	1
34	PAOZZ	2520011749554	76760	13766	.YOKE,UNIVERSAL JOIN FRONT.....	1
35	PAOZZ	5310011482687	7X677	12338062	WASHER,LOCK.....	1
36	PAOZZ	5310011748091	82978	4167924	NUT,PLAIN,ASSEM.....	1
37	PAOZZ	5340012906234	76760	00015105	PLUG,LEAKPROOF SEAL.....	1
38	PAOZZ	5315005760265	76760	91386	PIN,STRAIGHT HEADLESS.....	1
39	PAHZZ	2520011597757	7X677	3787240	MAGNET,CHIP COLLECT.....	1

END OF FIGURE

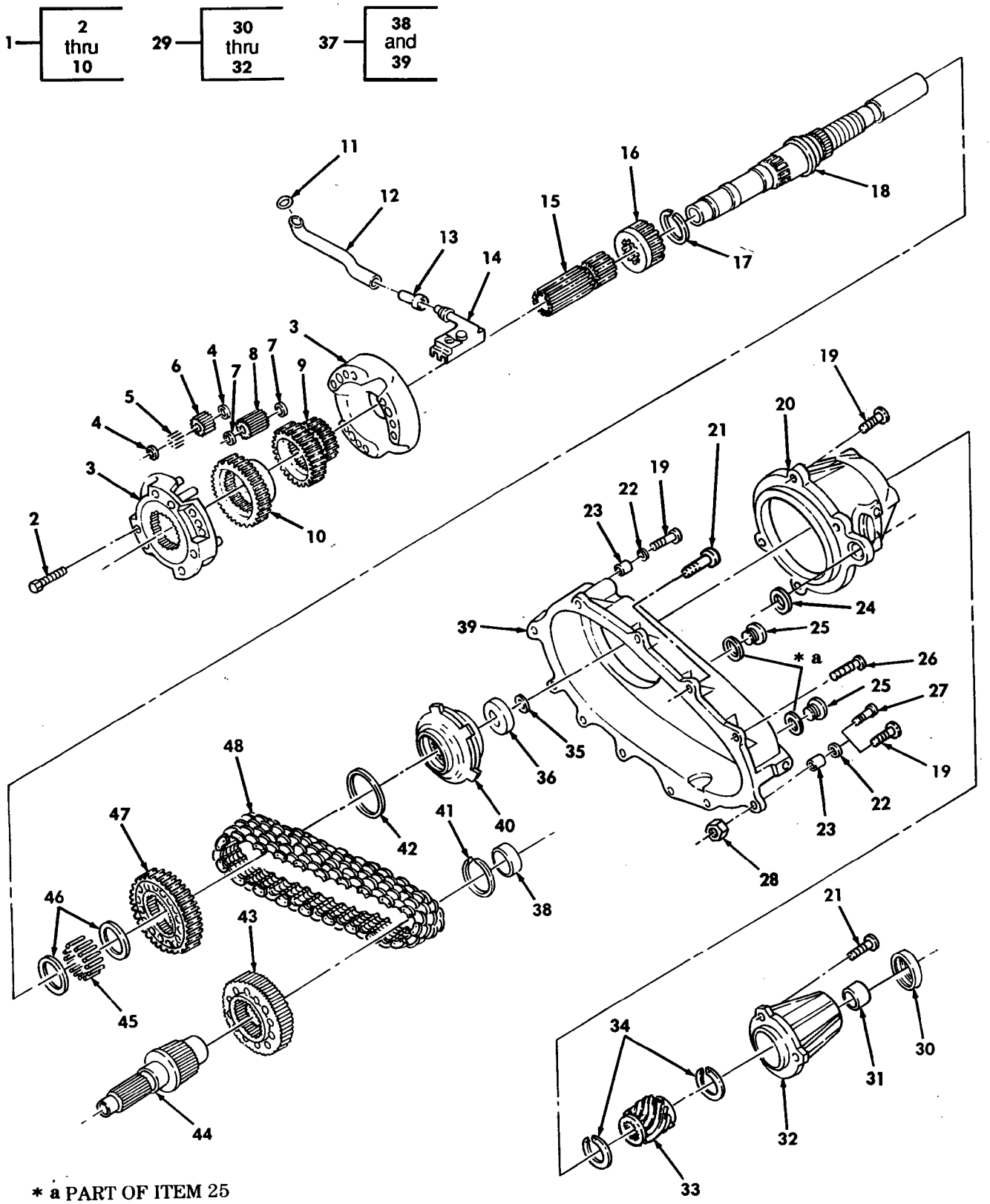

Figure 103. Transfer Case Assembly (Rear Half) (Serial Number 299999 and Below).

(1) ITEM NO	(2) SMR CODE	(3) NSN	(4) CAGEC	(5) PART NUMBER	(6) DESCRIPTION AND USABLE ON CODES(UOC)	(7) QTY
					GROUP 0801 POWER TRANSFER,FINAL DRIVE,PLANETARY OR DROP GEAR BOX ASSEMBLY	
					FIG. 103 TRANSFER CASE ASSEMBLY, (REAR HALF)(SERIAL NUMBER 299999 AND BELOW)	
1	PAHHH	2520013588879	76760	17588	PLANETARY GEAR ASSE.....	1
2	PAHZZ	5306013594530	76760	11797	.BOLT,MACHINE.....	3
3	PAHZZ	2520013588878	76760	16651	.PLANETARY GEAR ASS.....	1
4	PAHZZ	5310013587974	76760	17568	.WASHER,FLAT.....	6
5	PAHZZ	3110013596669	76760	17567	.BEARING,ROLLER,NEE.....	54
6	PAHZZ	3020013591136	76760	17566	.GEAR,SPUR.....	3
7	PAHZZ	5310013587975	76760	16286	.WASHER,FLAT.....	6
8	PAHZZ	3020013588661	76760	16290	.GEAR,SPUR.....	3
9	PAHZZ	3020013588656	76760	17570	.GEAR CLUSTER.....	1
10	PAHZZ	2520013588658	76760	17573	.DIFFERENTIAL GEAR.....	1
11	PAHZZ	5330013589541	76760	16214	SEAL,PLAIN.....	1
12	PFHZZ	4710013588410	76760	17510	TUBE,BENT,METALLIC.....	1
13	PAHZZ	4720013586100	76760	16218	HOSE,NONMETALLIC.....	1
14	PAHZZ	4730013592217	34623	5938666	STRAINER ELEMENT,SE.....	1
15	PAHZZ	3040014134022	76760	21065	SHAFT,STRAIGHT.....	1
16	PAHZZ	3020013588662	76760	17575	GEAR,SPUR.....	1
17	PAHZZ	5365013584641	76760	16297	SPACER,RING.....	1
18	PAHZZ	3040014201887	76760	21909	SHAFT,SHOULDERED.....	1
19	PAHZZ	5306011654283	24617	11500831	BOLT,SELF-LOCKING.....	5
20	PAHZZ	5330014159612	76760	21727	RETAINER,PACKING.....	1
21	PAHZZ	5306011524696	24617	11503428	BOLT,SELF-LOCKING.....	10
22	PAHZZ	5310011748158	34623	5740230	WASHER,FLAT.....	12
23	PAHZZ	5315011604642	7X677	14037948	PIN,SPRING CASE ALIGNMENT.....	2
24	PAHZZ	5315014640812	34623	5938665	PIN,STRAIGHT,HEADLE DOWEL.....	1
25	PAOZZ	5365014469408	76760	22398	PLUG,MACHINE THREAD.....	2
26	PAHZZ	5305012097668	34623	5741075	SCREW,SPECIAL.....	2
27	PAHZZ	5305014161269	76760	17844	SCREW,MACHINE.....	1
28	PAHZZ	5310014163009	34623	5714233	NUT,PLAIN,HEXAGON.....	1
29	PAHHH	2520014131904	76760	19140	EXTENSION ASSEMBLY.....	1
30	PAHZZ	5330014159613	76760	15896	.SEAL,PLAIN.....	1
31	PAHZZ	3120014178178	76760	17475	.BUSHING,SLEEVE.....	1
32	XAHZZ		76760	19134	.EXTENSION.....	1
33	PAHZZ	3020013588659	76760	16276	GEAR,HELICAL.....	1
34	PAHZZ	5325013587962	76760	13955	RING,RETAINING.....	3
35	PAHZZ	5330013591292	76760	15574	SEAL,PLAIN.....	1
36	PAHZZ	3130013601051	34623	5938607	BEARING UNIT,PLAIN.....	1
37	PFHHH	3040013591118	76760	17585	HOUSING,MECHANICAL.....	1
38	PAHZZ	3110011554440	60380	J-2416	.BEARING,ROLLER,NEE.....	1
39	XAHZZ		76760	17578	.CASE REAR HALF.....	1
40	PAHZZ	4320013588608	76760	16686	GEAR ROTOR SET,ROTA.....	1
41	PAHZZ	5325011576764	7X677	14037981	RING,RETAINING.....	1
42	PAHZZ	5325013587961	76760	13877	RING,RETAINING.....	1
43	PAHZZ	3020013592529	34623	5938663	SPROCKET WHEEL.....	1
44	PAHZZ	3040013588691	76760	16275	GEARSHAFT,SPUR.....	1
45	PAHZZ	3110013598858	34623	5938654	ROLLER SET,BEARING.....	53
46	PAHZZ	3120013605960	34623	5938653	BEARING,WASHER,THRU.....	2

(1) ITEM NO	(2) SMR CODE	(3) NSN	(4) CAGEC	(5) PART NUMBER	(6) DESCRIPTION AND USABLE ON CODES(UOC)	(7) QTY
47	PAHZZ	3020013592529	76760	17571	SPROCKET WHEEL.....	1
48	PAHZZ	3020013588601	76760	17577	CHAIN,SILENT.....	1

END OF FIGURE

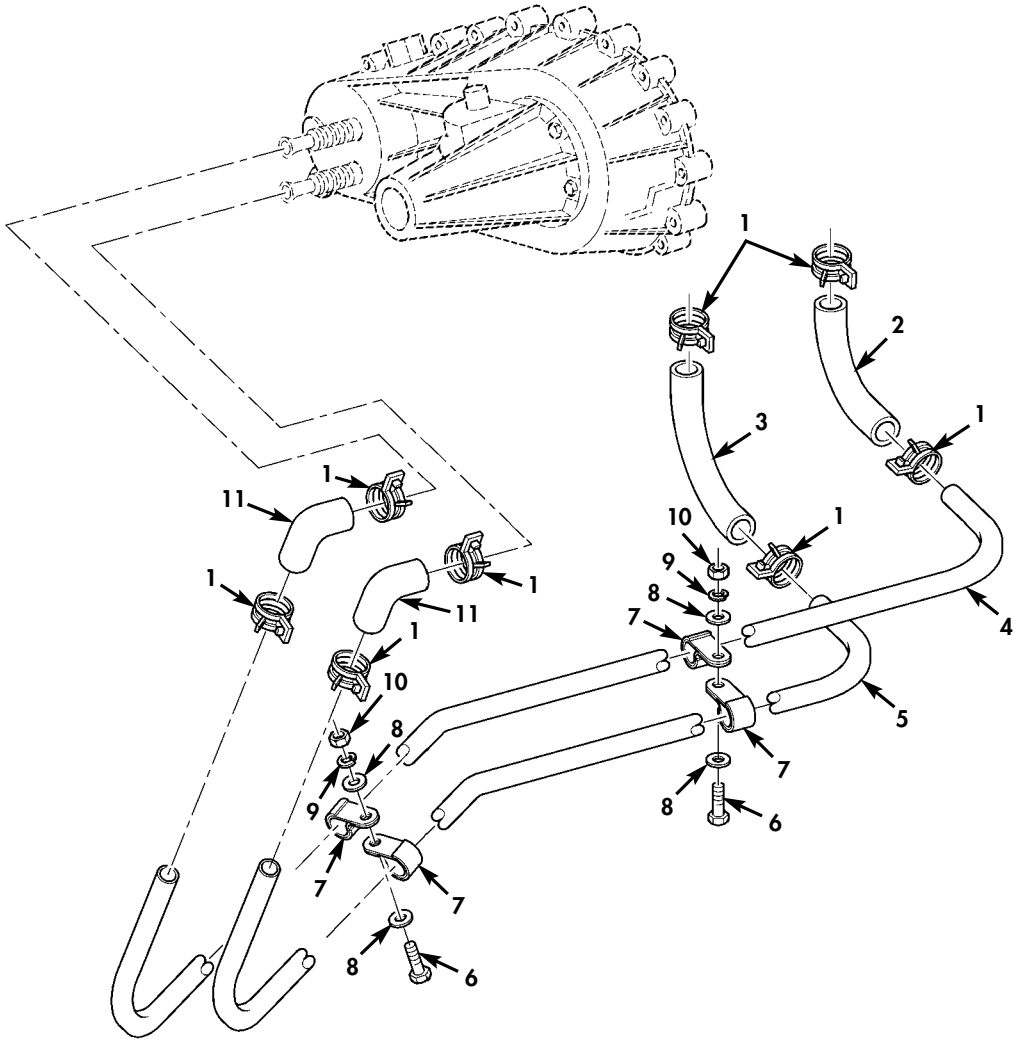

Figure 103A. Differential and Transfer Case Cooler Lines (Serial Number 300000 and Above).

(1) ITEM NO	(2) SMR CODE	(3) NSN	(4) CAGEC	(5) PART NUMBER	(6) DESCRIPTION AND USABLE ON CODES(UOC)	(7) QTY
					GROUP 0801 POWER TRANSFER AND FINAL DRIVE ASSEMBLIES	
					FIG. 103A DIFFERENTIAL AND TRANSFER CASE COOLER LINES(SERIAL NUMBER 300000 AND ABOVE)	
* 1	PAOZZ	4730015646847	34623	6017845	CLAMP,LOOP..... UOC:TTA,TTT,TT1,UUA,UUU,UU1,UU2	8
* 2	MOOZZ		34623	6042796-7.5IN	HOSE,NONMETALLIC MAKE FROM HOSE P/N MS521301A203R 7.5 INCHES LONG..... UOC:TTA,TTT,TT1,UUA,UUU,UU1,UU2	1
* 3	MOOZZ		34623	6043355-20.5IN	HOSE,NONMETALLIC MAKE FROM HOSE P/N MS521301A203R,20.5 INCHES LONG..... UOC:TTA,TTT,TT1,UUA,UUU,UU1,UU2	1
* 4	PAOZZ	4710015657581	34623	6032849	TUBE,BENT,METALLIC..... UOC:TTA,TTT,TT1,UUA,UUU,UU1,UU2	1
* 5	PAOZZ	4710015657197	34623	6032848	TUBE,BENT,METALLIC..... UOC:TTA,TTT,TT1,UUA,UUU,UU1,UU2	1
* 6	PAOZZ	5305000680510	80204	B1821BH038C100N	SCREW,CAP,HEXAGON H 3/8-16 X 1.00.. UOC:TTA,TTT,TT1,UUA,UUU,UU1,UU2	2
* 7	PAOZZ	5340007255280	80205	MS21333-125	CLAMP,LOOP..... UOC:TTA,TTT,TT1,UUA,UUU,UU1,UU2	4
* 8	PAOZZ	5310014124013	24617	2436163	WASHER,FLAT 3/8..... UOC:TTA,TTT,TT1,UUA,UUU,UU1,UU2	4
* 9	PAOZZ	5310000045033	80205	MS35338-46	WASHER,LOCK 3/8..... UOC:TTA,TTT,TT1,UUA,UUU,UU1,UU2	2
* 10	PAOZZ	5310007610654	96906	MS51967-9	NUT,PLAIN,HEXAGON 3/8-16..... UOC:TTA,TTT,TT1,UUA,UUU,UU1,UU2	2
* 11	PAOZZ	4720011892218	19207	12339251	HOSE,PREFORMED..... UOC:TTA,TTT,TT1,UUA,UUU,UU1,UU2	2

END OF FIGURE

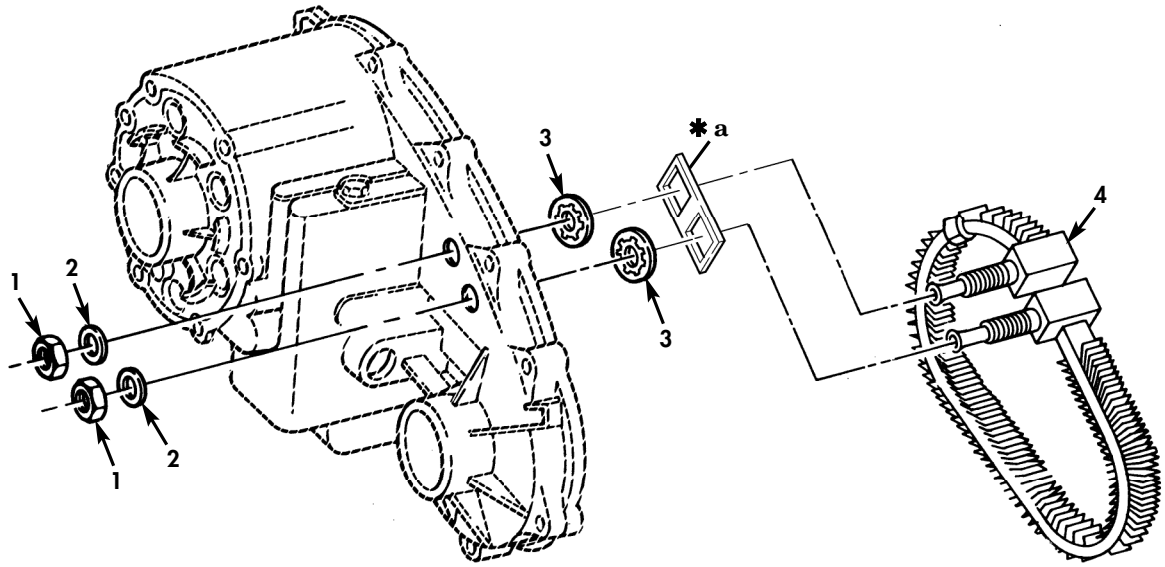

✱**a** PART OF ITEM 4

Figure 104. Transfer Oil Cooler Assembly (Serial Number 299999 and Below).

(1) ITEM NO	(2) SMR CODE	(3) NSN	(4) CAGEC	(5) PART NUMBER	(6) DESCRIPTION AND USABLE ON CODES(UOC)	(7) QTY
					GROUP 0801 POWER TRANSFER,FINAL DRIVE,PLANETARY OR DROP GEAR BOX ASSEMBLY	
					FIG. 104 TRANSFER OIL COOLER ASSEMBLY (SERIAL NUMBER 299999 AND BELOW)	
1	PAHZZ	5310011354730	72582	9442899	NUT 1/2-20.....	2
2	PAHZZ	5310004719243	93334	6023054	WASHER,FLAT 1/2.....	2
3	PAHZZ	5331012097726	34623	5741062	O-RING.....	2
4	PAHZZ	2520013587698	76760	42054	COOLER,FLUID,TRANSM.....	1

END OF FIGURE

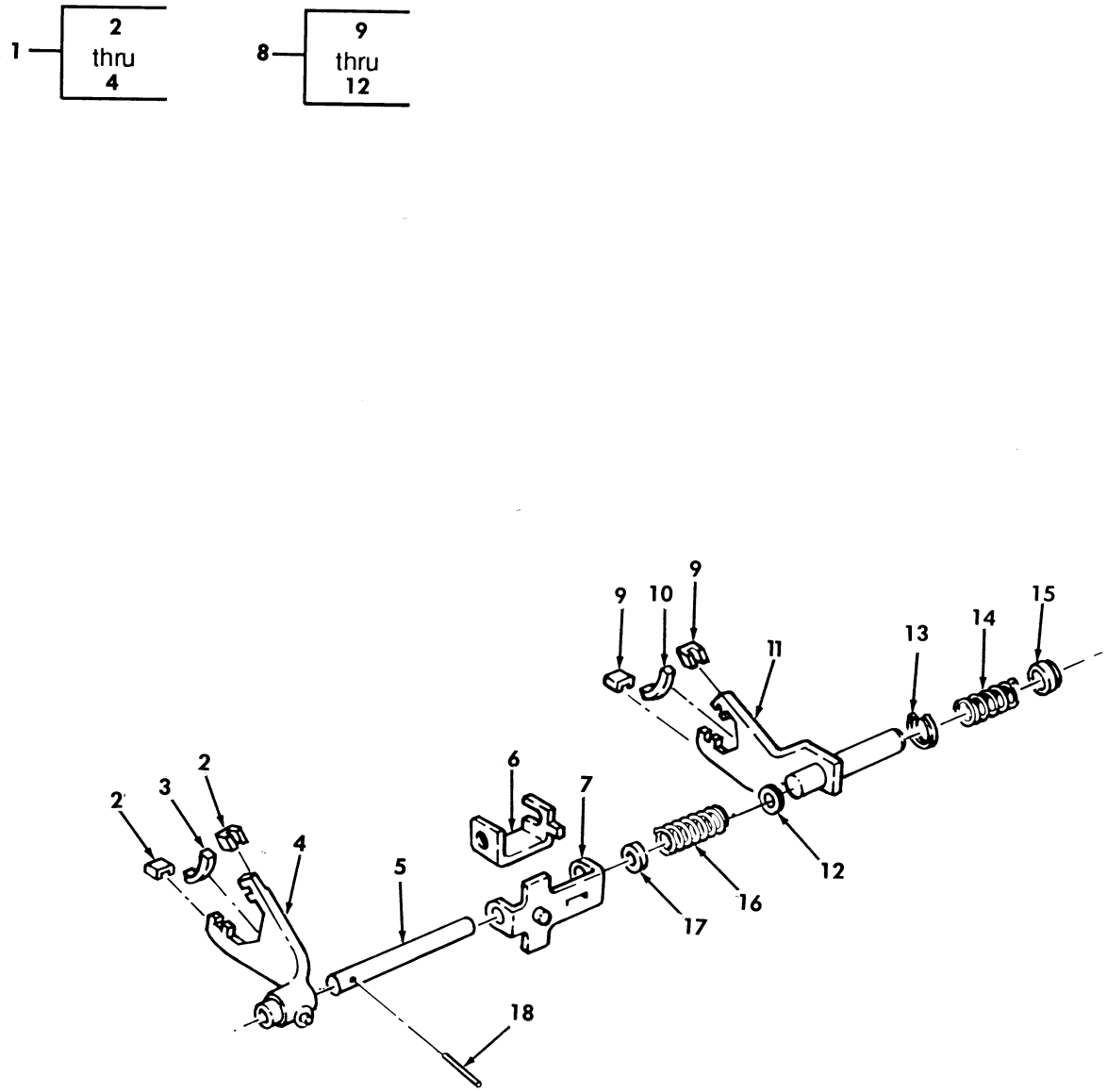

Figure 105. Transfer Shift Mechanisms.

(1) ITEM NO	(2) SMR CODE	(3) NSN	(4) CAGEC	(5) PART NUMBER	(6) DESCRIPTION AND USABLE ON CODES(UOC)	(7) QTY
					GROUP 0801 POWER TRANSFER,FINAL DRIVE,PLANETARY OR DROP GEAR BOX ASSEMBLY	
					FIG. 105 TRANSFER SHIFT MECHANISMS	
1	PAHHH	2520013588701	76760	16472	SHIFTER FORK.....	1
2	PAHZZ	2520011628985	34623	5740114	.PAD,FORK,TRANSFER.....	2
3	PAHZZ	2590011598757	34623	5740223	.PAD,FORK.....	1
4	XAHZZ		76760	16473	.FORK.....	1
5	PFHZZ	3040013588596	76760	16449	SHAFT,STRAIGHT.....	1
6	PAHZZ	2590013587643	76760	16310	BRACKET,VEHICULAR C.....	1
7	PAHZZ	2590013587644	76760	16474	BRACKET,VEHICULAR C.....	1
8	PAHHH	2520013588700	76760	17586	SHIFTER FORK.....	1
9	PAHZZ	2520011628985	34623	5740114	.PAD,FORK,TRANSFER.....	2
10	PAHZZ	2520013588883	76760	15556	.PAD,FORK,TRANSMISSI.....	1
11	XAHZZ		76760	17562	.FORK AND SLEEVE.....	1
* 12	PAHZZ	5365013584642	34623	5938630	.SPACER,RING.....	2
13	PAHZZ	5310013587978	76760	16456	WASHER,SPRING TENSI.....	1
14	PAHZZ	5360013586564	34623	5938633	SPRING,HELICAL,COMP.....	1
15	PAHZZ	3120013596764	76760	16457	BUSHING,SLEEVE.....	1
16	PAHZZ	5360013585420	76760	17564	SPRING,HELICAL,COMP.....	1
17	PAHZZ	5340013587940	76760	16447	HOLDER,SPRING.....	1
18	PAHZZ	5315005760265	76760	91386	PIN,STRAIGHT,HEADLE.....	1

END OF FIGURE

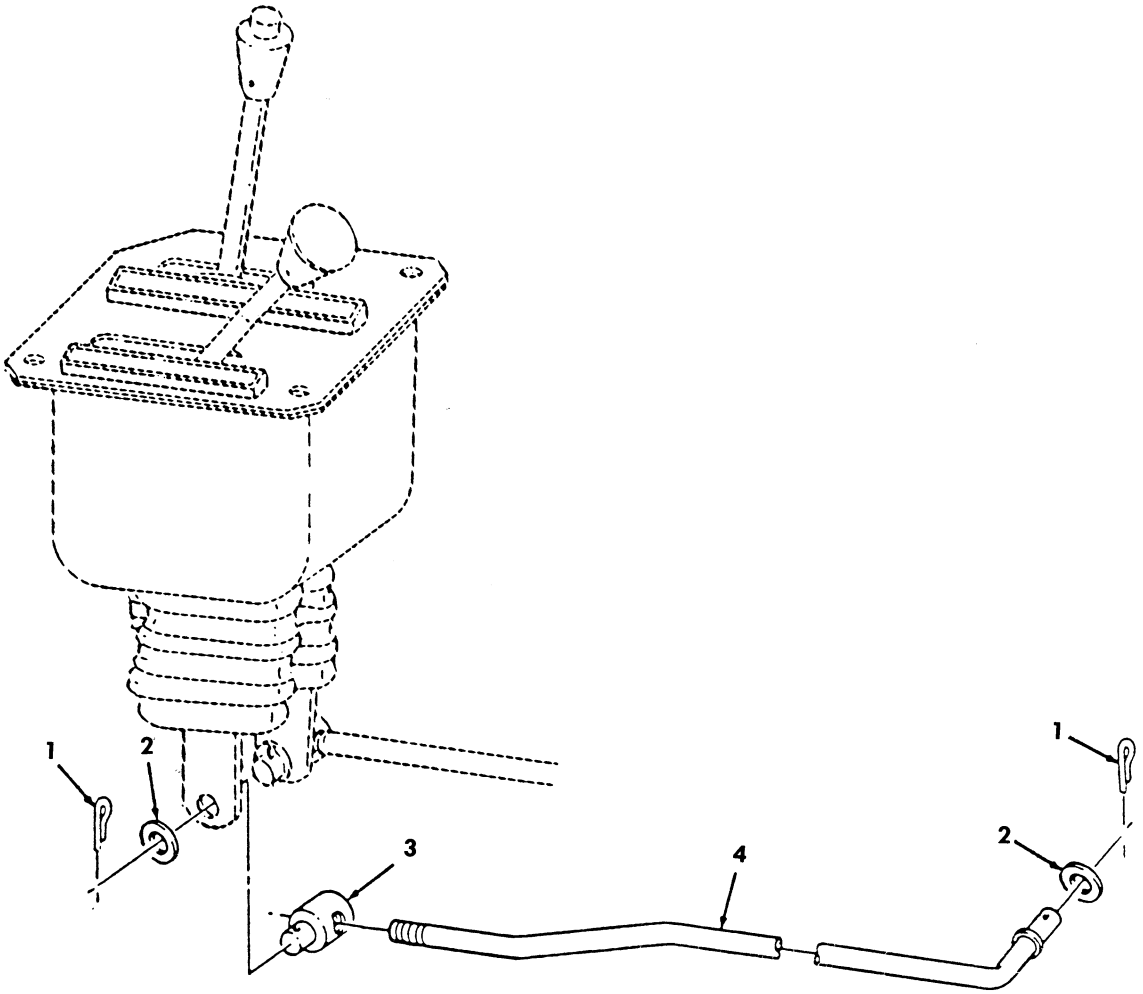

Figure 106. Transfer Shift Control Lever.

(1) ITEM NO	(2) SMR CODE	(3) NSN	(4) CAGEC	(5) PART NUMBER	(6) DESCRIPTION AND USABLE ON CODES(UOC)	(7) QTY
					GROUP 0803 GEAR SHIFT, VACUUM BOOSTER AND CONTROLS	
					FIG. 106 TRANSFER SHIFT CONTROL LEVER	
1	PAOZZ	5315008395821	80205	MS24665-351	PIN,COTTER 1/8-3/4.....	2
2	PAOZZ	5310000806004	96906	MS27183-14	WASHER,FLAT 3/8.....	2
3	PAOZZ	2520014091602	34623	6001696	TRUNION,POWER PLAN.....	1
* 4	PAOZZ	3040014092501	19207	12460067	CONNECTING LINK,RIG.....	1

END OF FIGURE

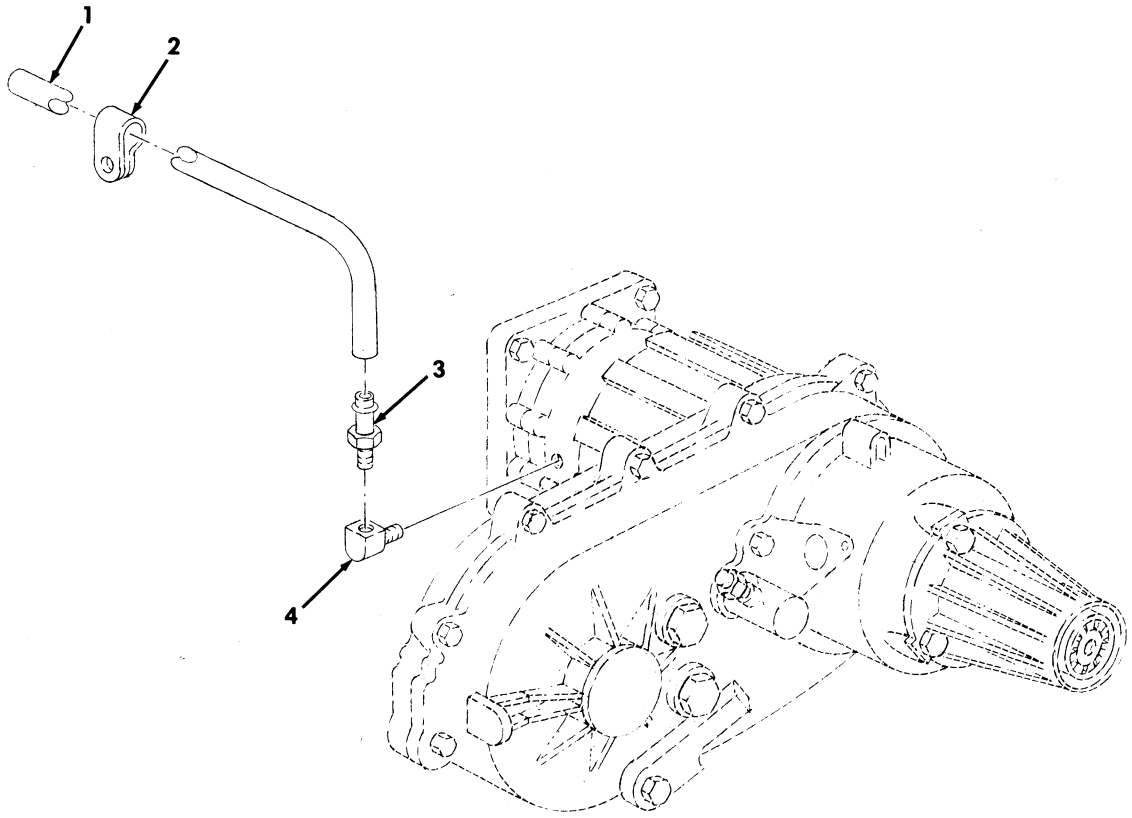

Figure 107. Transfer Case Vent Line and Related Parts.

(1) ITEM NO	(2) SMR CODE	(3) NSN	(4) CAGEC	(5) PART NUMBER	(6) DESCRIPTION AND USABLE ON CODES(UOC)	(7) QTY
					GROUP 0804 LUBRICATION,COOLING OR HYDRAULIC COMPONENTS AND SERVO UNITS	
					FIG. 107 TRANSFER CASE VENT LINE AND RELATED PARTS	
1	MOOZZ		19207	CPR104420-1-17	TUBING,NONMETALLIC MAKE FROM TUBE, P/N CPR104420-1,17 INCHES LONG.....	1
2	PAOZZ	5340000673868	96906	MS21333-109	CLAMP,LOOP.....	1
3	PAOZZ	4730011855348	01989	1068X4	ADAPTER,STRAIGHT,PI.....	1
4	PAOZZ	4730006399730	79470	3400X2W	ELBOW,PIPE.....	1

END OF FIGURE

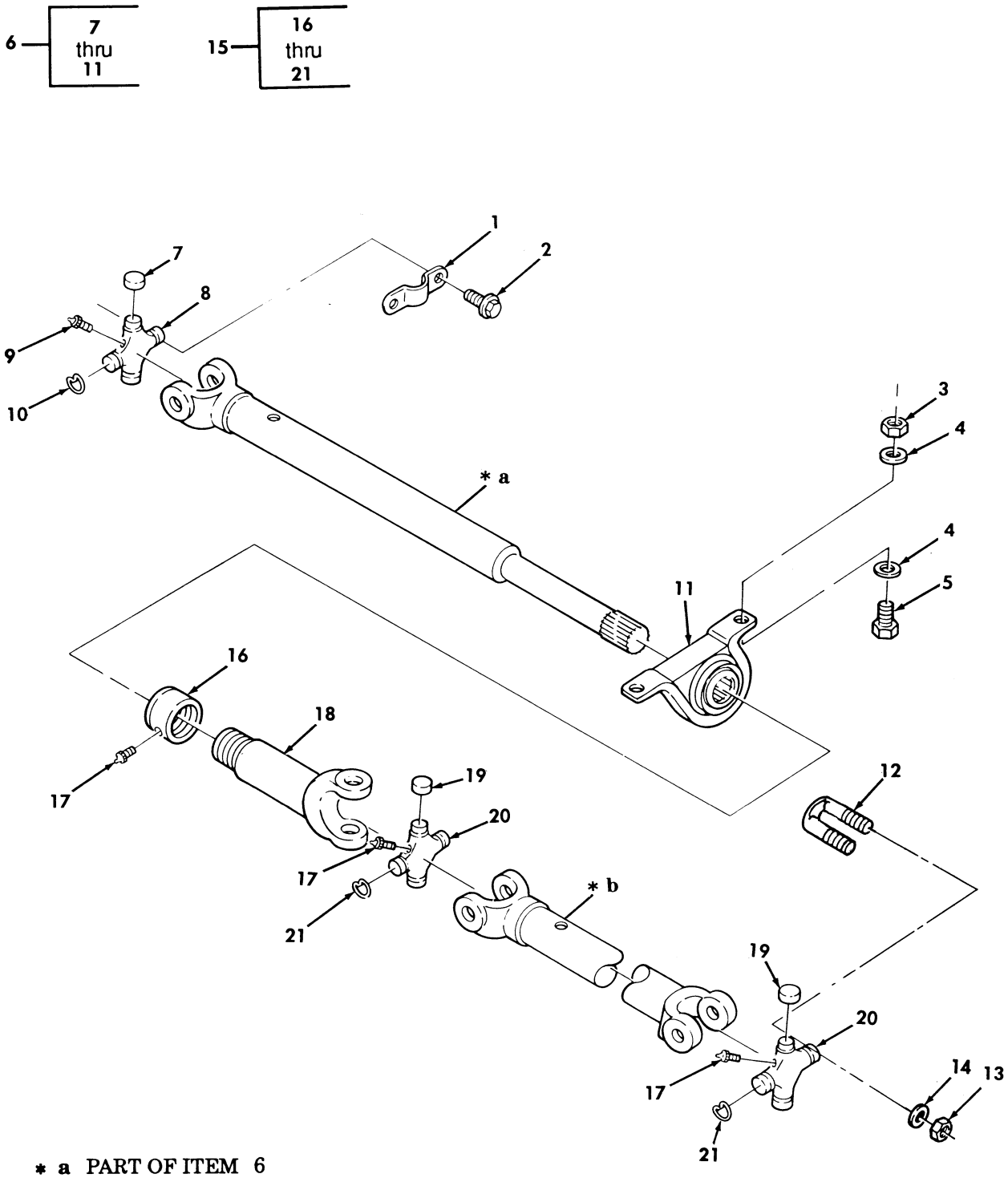

* a PART OF ITEM 6
* b PART OF ITEM 15

Figure 108. Front Propeller Shaft Assemblies.

(1) ITEM NO	(2) SMR CODE	(3) NSN	(4) CAGEC	(5) PART NUMBER	(6) DESCRIPTION AND USABLE ON CODES(UOC)	(7) QTY
					GROUP 09 PROPELLER SHAFTS	
					0900 PROPELLER SHAFTS	
					FIG. 108 FRONT PROPELLER SHAFT ASSEMBLIES	
* 1	PAOZZ	5340011900807	95019	2-70-59	STRAP,RETAINING.....	2
2	PAOZZ	5306011905760	95019	231401	BOLT,SELF-LOCKING.....	4
3	PAOZZ	5310011504003	24617	9422299	NUT,SELF-LOCKING 7/16-14.....	2
4	PAOZZ	5310008094085	24617	9420022	WASHER,FLAT.....	4
5	PAOZZ	5305000711786	80204	B1821BH044C100N	SCREW,CAP HEXAGON H 7/16-14 X 1.00.	2
6	PAOFF	2520014235120	34623	6002629	PROPELLER SHAFT WIT FRONT.....	1
* 7	KFOZZ		95019	2-6-1318X	.BEARING RACE SEE NOTE 1 PART OF KIT P/N 5-213X.....	4
8	KFOZZ		95019	2-5-848X	.CROSS ASSEMBLY PART OF KIT P/N 5-213X.....	1
9	PAOZZ	4730005044203	96906	MS15001-1	.FITTING,LUBRICATION.....	1
10	PAOZZ	5325001749829	19207	5226154	.RING,RETAINING PART OF KIT P/N 5-213X.....	4
11	PAFZZ	3130012039870	95019	211415X	.BEARING UNIT,BALL.....	1
* 12	PAOZZ	5306015023440	19207	12339050	BOLT,U.....	2
13	PAOZZ	5310009054600	96906	MS51968-6	NUT,PLAIN,HEXAGON 5/16-24.....	4
* 14	PAOZZ	5310000120214	96906	MS35338-26	WASHER,LOCK 5/16.....	4
15	PAOOO	2520014130080	34623	6222607	PROPELLER SHAT WIT.....	1
16	PAOZZ	5340011881017	95019	211121X	.CAP,PROTECTIVE,DUST.....	1
17	PAOZZ	4730000504203	96906	MS15001-1	.FITTING,LUBRICATIOON.....	1
18	XAOZZ		95019	2-3-1149KX	.YOKE,UNIVERSAL.....	1
19	KFOZZ		95019	2-6-288X	.BEARING RACE SEE NOTE 1 PART OF KIT P/N 5-213X.....	8
* 20	KFOZZ		95019	2-5-848X	.CROSS ASSEMBLY SEE NOTE 1 PART OF KIT P/N 5-213X.....	2
* 21	PAOZZ	5325001749829	19207	5226154	.RING RETAINING SEE NOTE 1 PART OF KIT P/N 5-213X.....	8

END OF FIGURE

1 — 2 thru 6

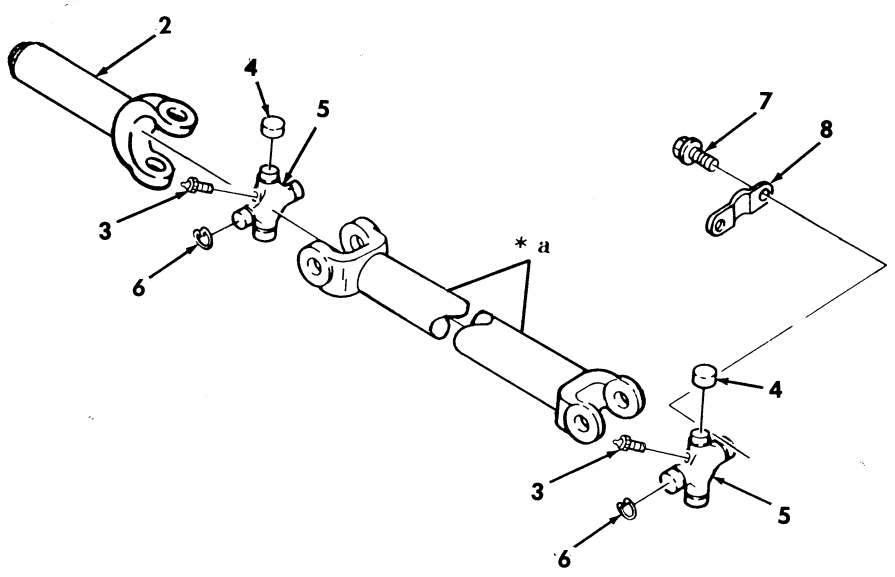

* a PART OF ITEM 1

Figure 109. Rear Propeller Shaft Assemblies.

(1) ITEM NO	(2) SMR CODE	(3) NSN	(4) CAGEC	(5) PART NUMBER	(6) DESCRIPTION AND USABLE ON CODES(UOC)	(7) QTY
					GROUP 0900 PROPELLER SHAFTS	
					FIG. 109 REAR PROPELLER SHAFT ASSEMBLY	
1	PAOOO	2520014240425	95019	919800-2109	PROPELLER SHAFT WIT.....	1
* 2	PAOZZ		95019	3-3-5571X-1	.SLIP YOKE,UNIVERSAL.....	1
3	PAOZZ	4730000504203	96906	MS15001-1	.FITTING,LUBRICATION.....	2
4	KFOZZ		95019	3-6-238X	.BEARING,RACE PART OF KIT P/N 5-174X	8
5	KFOZZ		95019	2-5-668X	.CROSS ASSEMBLY PART OF KIT P/N 5-174X.....	2
6	PAOZZ	5325001749829	19207	5226154	.RING,RETAINING PART OF KIT P/N 5-174X.....	8
7	PAOZZ	5306013511744	72447	231142	BOLT,MACHINE 5/16-24 X .750.....	4
8	PAOZZ	5340013892417	72447	3-70-89	STRAP,RETAINING.....	2

END OF FIGURE

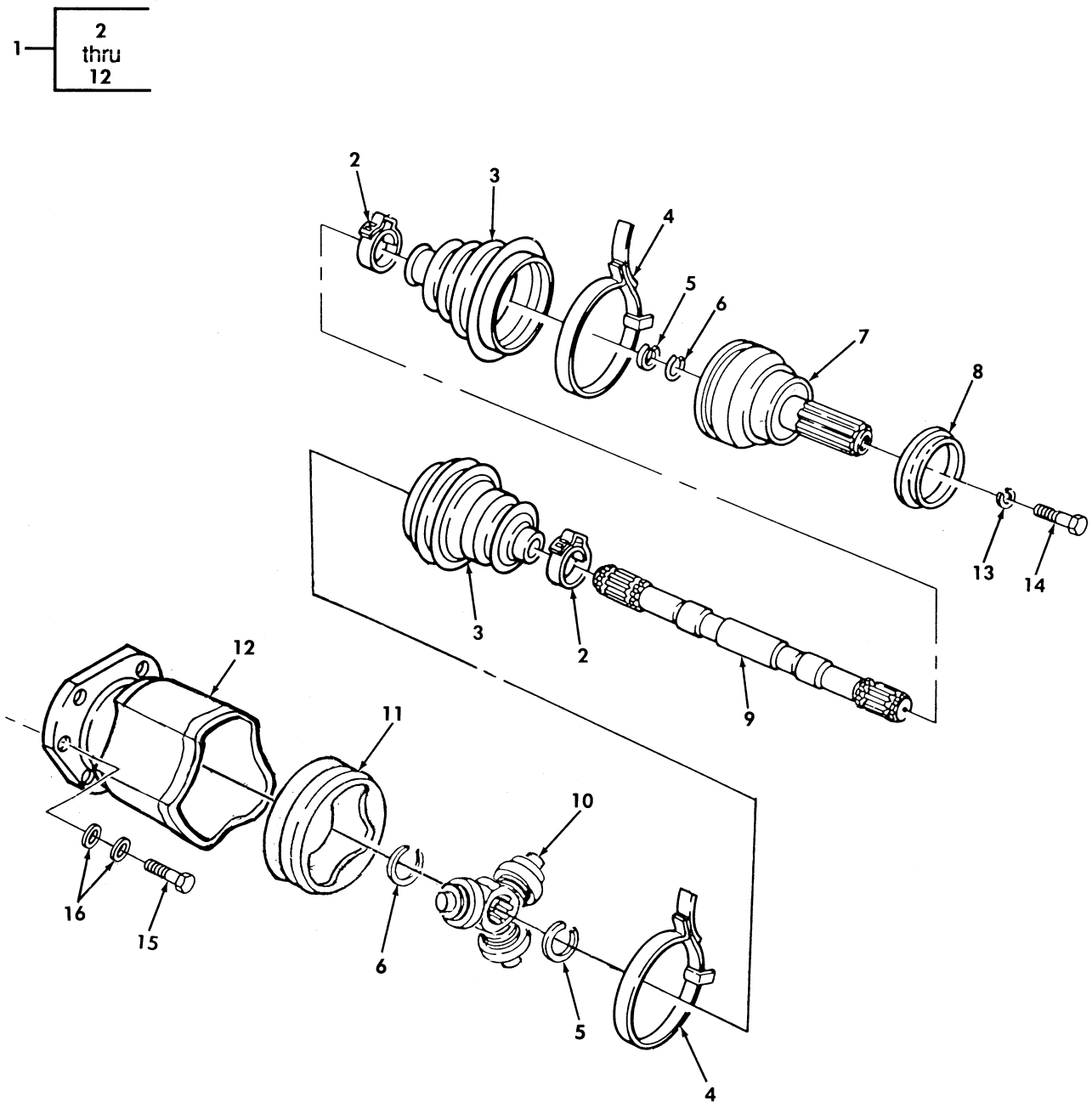

Figure 110. Front Halfshaft Assembly, Left and Right Side.

(1) ITEM NO	(2) SMR CODE	(3) NSN	(4) CAGEC	(5) PART NUMBER	(6) DESCRIPTION AND USABLE ON CODES(UOC)	(7) QTY
					GROUP 10 FRONT AXLE	
					1000 FRONT AXLE ASSEMBLY	
					FIG. 110 FRONT HALFSHAFT ASSEMBLY LEFT AND RIGHT SIDE	
* 1	PAOOO	2520014743901	62826	299-070	SHAFT,AXLE AUTOMOTI FRONT R.H.....	1
* 1	PAOOO	2520014744012	62826	299-0069	SHAFT,AXLE AUTOMOTI FRONT L.H.....	1
2	KFOZZ		62826	1400270	.CLAMP,BOOT 35.1 MM PART OF KIT P/N 2990054 PART OF KIT P/N 57K3515.....	2
3	KFOZZ		62826	2890019	.BOOT PART OF KIT P/N 2990054 PART OF KIT P/N 2990055 PART OF KIT P/N 57K3515.....	2
4	KFOZZ		62826	1400271	.CLAMP,BOOT 106.8 MM PART OF KIT P/N 2990054 PART OF KIT P/N 2990055 PART OF KIT P/N 57K3515.....	2
5	KFOZZ		62826	2090004	.RING,SPACER PART OF KIT P/N 2390086 PART OF KIT P/N 2990054 PART OF KIT P/N 2990055 PART OF KIT P/N 57K3515	2
* 6	KFOZZ		62826	2090003	.RING,RETAINING PART OF KIT P/N 2390086 PART OF KIT P/N 2990054 PART OF KIT P/N 2990055 PART OF KIT P/N 57K3515.....	2
7	KFOZZ		62826	2290033	.JOINT ASSEMBLY FIXED PART OF KIT P/N 2990054 PART OF KIT P/N 2990055.	1
8	PAOZZ	2530012969333	34623	5598209	.DEFLECTOR,DIRT AND PART OF KIT P/N 2990054 PART OF KIT P/N 2990055.....	1
9	KFOZZ		62826	2790024	.SHAFT,SHOULDERED L.H. PART OF KIT P/N 2990054.....	1
9	KFOZZ		62826	2790026	SHAFT,SHOULDERED R.H. PART OF KIT P/N 2990055.....	1
* 10	KFOZZ		62826	2390036	.SPIDER ASSEMBLY PART OF KIT P/N 2390086.....	1
* 11	KFOZZ		62826	2390076	.INSERT PART OF KIT P/N 2390086.....	1
* 12	KFOZZ		62826	2390085	.JOINT,PLUNGE PART OF KIT P/N 2390086.....	1
13	PAOZZ	5310000115093	96906	MS35335-65	WASHER,LOCK 3/8.....	2
14	PAOZZ	5305000680511	80204	B1821BH038C125N	SCREW,CAP HEXAGON H 3/8-16 X 1.25...	2
15	PAOZZ	5306011857048	7X677	11516306	BOLT,MACHINE 10-1.5 X 35 MM.....	12
16	PAOZZ	5310014573292	34623	6008029	WASHER,LOCK 10 MM.....	24

END OF FIGURE

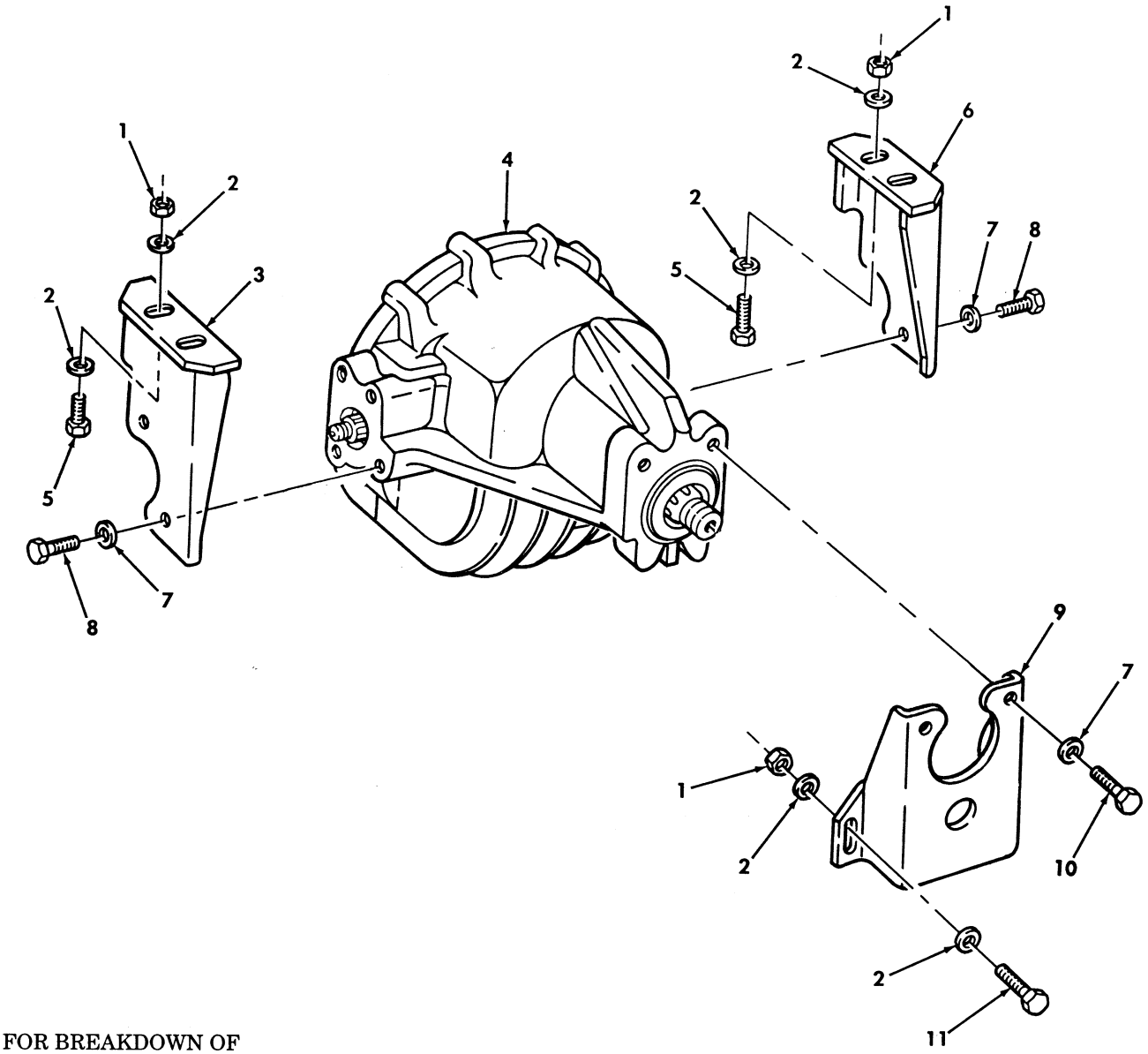

FOR BREAKDOWN OF
ITEM 4, SEE FIGURE 117.

Figure 111. Front Axle Differential, Mounting Bracket, and Hardware.

(1) ITEM NO	(2) SMR CODE	(3) NSN	(4) CAGEC	(5) PART NUMBER	(6) DESCRIPTION AND USABLE ON CODES(UOC)	(7) QTY
					GROUP 1002 DIFFERENTIAL	
					FIG. 111 FRONT AXLE DIFFERENTIAL, MOUNTING BRACKET,AND HARDWARE	
1	PAFZZ	5310004883889	96906	MS51943-39	NUT,SELF-LOCKING,HE 1/2-13.....	6
2	PAFZZ	5310011211703	24617	2436165	WASHER,FLAT 1/2.....	12
3	PAFZZ	2590013952228	34623	12338150-6	BRACKET,VEHICULAR C L.H.....	1
4	PAFHH	2520014165217	34623	RCSK17305	DIFFERENTIAL,DRIVIN FRONT.....	1
5	PAFZZ	5305000712069	80204	B1821BH050C150N	SCREW,CAP,HEXAGON H 1/2-13 X 1.50..	4
6	PFFZZ	2590013952229	9C234	12338150-7	BRACKET,VEHICULAR C R.H.....	1
7	PAFZZ	5310011517347	24617	2436167	WASHER,FLAT 5/8.....	6
8	PAFZZ	5305007247219	80204	B1821BH063C125N	SCREW,CAP,HEXAGON H 5/8-11 X 1.25..	4
9	PAFZZ	5340014328680	34623	6002219	BRACKET,MOUNTING.....	1
10	PAFZZ	5305007247220	80204	B1821BH063C150N	SCREW,CAP,HEXAGON H 5/8-11 X 1.50..	2
11	PAFZZ	5305000712067	80204	B1821BH050C125N	SCREW,CAP,HEXAGON H 1/2-13 X 1.25..	2

END OF FIGURE

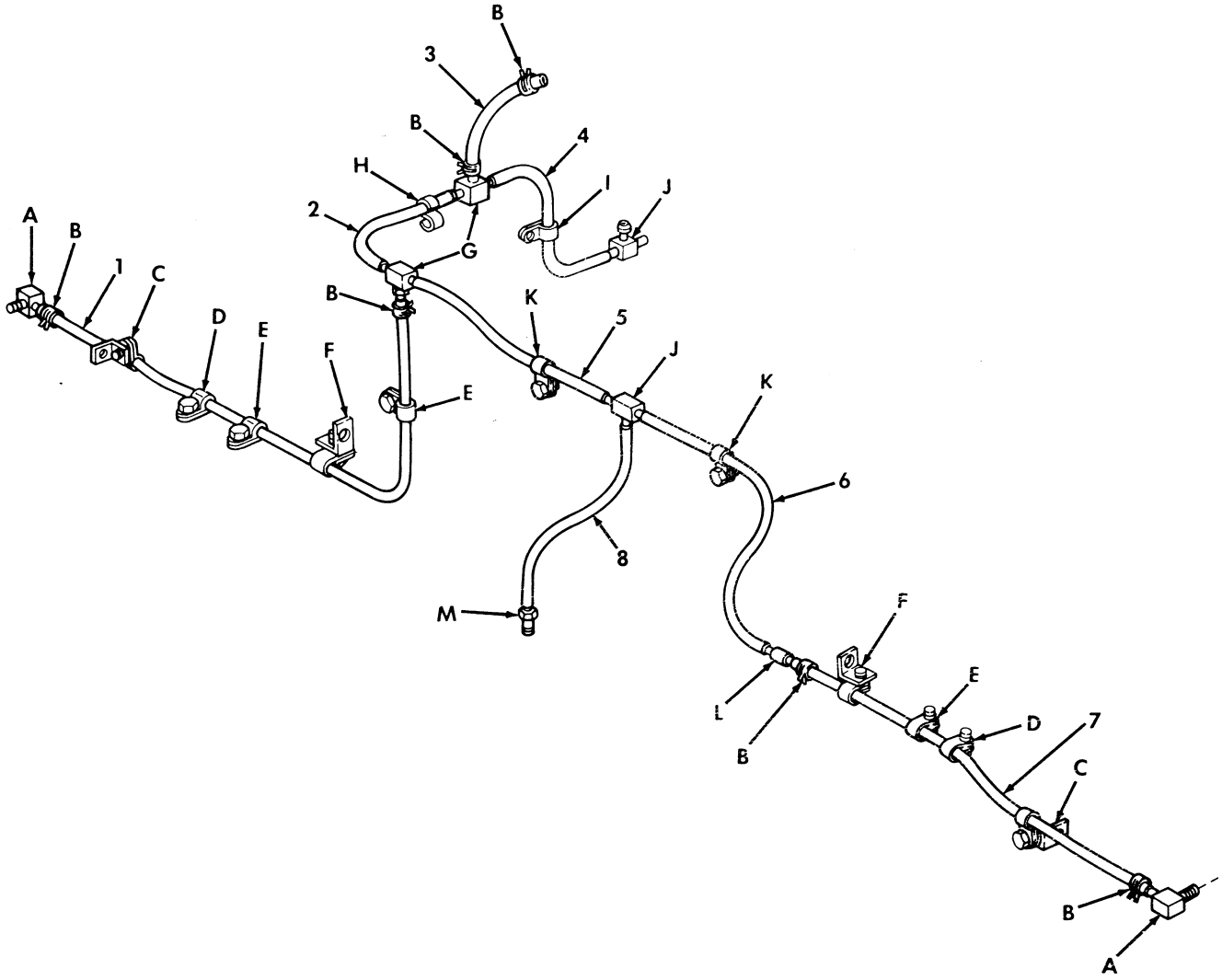

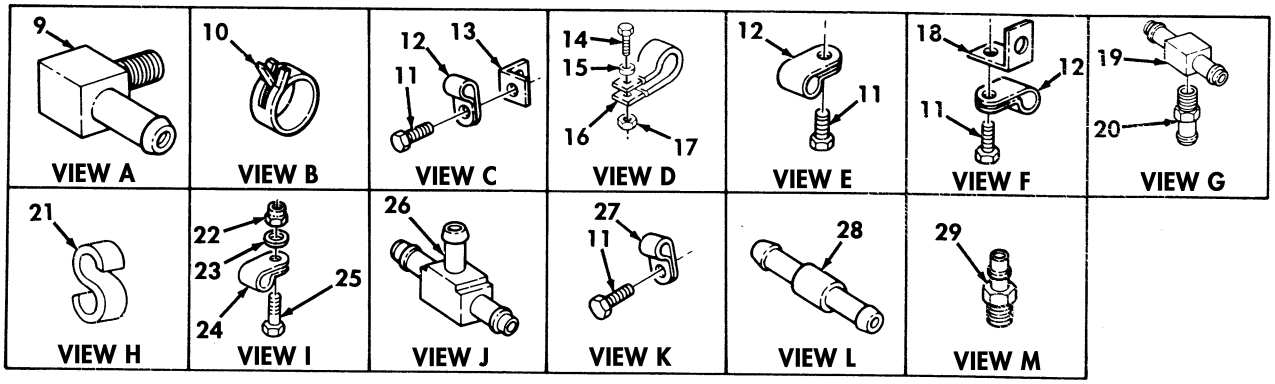

Figure 112. Front Axle Differential and Geared Hub Vent Lines.

(1) ITEM NO	(2) SMR CODE	(3) NSN	(4) CAGEC	(5) PART NUMBER	(6) DESCRIPTION AND USABLE ON CODES(UOC)	(7) QTY
					GROUP 1002 DIFFERENTIAL	
					FIG. 112 FRONT AXLE DIFFERENTIAL AND GEARED HUB VENT LINES	
1	MOOZZ		19207	12339981-9	HOSE,NONMETALLIC R.H. MAKE FROM HOSE,P/N RB1450-1-4IDX1-20D,34 INCHES LONG.....	1
2	MOOZZ		34623	5582643	TUBE MAKE FROM TUBE P/N CPR104420-1,15 INCHES LONG.....	1
3	MOOZZ		34623	5584372	HOSE MAKE FROM HOSE,P/N RB1450-1-4IDX1-20D,8 INCHES LONG.....	1
4	MOOZZ		19207	CPR104420-1-4	TUBE MAKE FROM TUBE, P/N CPR104420-1, 4 INCHES LONG.....	1
5	MOOZZ		34623	5591483	TUBE MAKE FROM TUBE,P/N CPR104420-1,14 INCHES LONG.....	1
6	MOOZZ		34623	5591482	TUBE MAKE FROM TUBE,P/N RB1450-1-4IDX1-20D,28 INCHES LONG.....	1
7	MOOZZ		19207	12339981-8	HOSE MAKE FROM HOSE, P/N RB1450-1-4IDX1-20D, 28 INCHES LONG.....	1
8	MOOZZ		34623	5584173	TUBE MAKE FROM TUBE,P/N RB1450-1-4IDX1-20D,9 INCHES LONG.....	1
9	PAOZZ	4730012004277	79470	1582	ELBOW,PIPE TO HOSE.....	2
10	PAOZZ	4730009541251	59199	UM5008	CLAMP,HOSE.....	6
11	PAOZZ	5305000518605	96906	MS16995-77	SCREW,CAP,SOCKET HE 3/8-16 X .50...	9
* 12	PAOZZ	5340009891771	96906	MS21333-123	CLAMP,LOOP.....	7
13	PFOZZ	5340013003715	34623	5598208	BRACKET,ANGLE GEARED HUB,FRONT VENT LINE.....	2
14	PAOZZ	5305000680502	96906	MS90725-6	SCREW,CAP,HEXAGON H 1/4-20 X 3/4...	2
15	PAOZZ	5310008094058	96906	MS27183-10	WASHER,FLAT 1/4.....	2
16	PAOZZ	5340014605306	19207	12340571-2	CLAMP,LOOP.....	2
17	PAOZZ	5310000614650	96906	MS51943-31	NUT,SELF-LOCKING,HE 1/4-20.....	2
18	PFOZZ	5340011902248	19207	12338170	BRACKET,ANGLE.....	2
19	PAOZZ	4730011928086	01989	1077X4	TEE,PIPE TO HOSE.....	2
20	PAOZZ	4730010048346	79470	1537	ADAPTER,STRAIGHT,PI.....	2
21	PAOZZ	5340011870892	19207	12339890	CLIP,SPRING TENSION.....	1
22	PAOZZ	5310008140673	96906	MS51943-33	NUT,SELF-LOCKING,HE 5/16-18.....	1
23	PAOZZ	5310000814219	96906	MS27183-12	WASHER,FLAT 5/16.....	1
24	PAOZZ	5340000673868	96906	MS21333-109	CLAMP,LOOP FRONT.....	1
* 25	PAOZZ	5306002258499	80205	MS90725-34	BOLT,MACHINE 5/16-18 X 1.00.....	1
26	PAOZZ	4730010035105	79470	1064X4	TEE,HOSE FRONT.....	2
27	PAOZZ	5340000509077	08627	406CD	CLAMP,LOOP.....	2
28	PAOZZ	4730011844760	01989	1062X6X4	REDUCER,HOSE FRONT.....	1
29	PAOZZ	4730011855348	01989	1068X4	ADAPTER,STRAIGHT,PI FRONT.....	1

END OF FIGURE

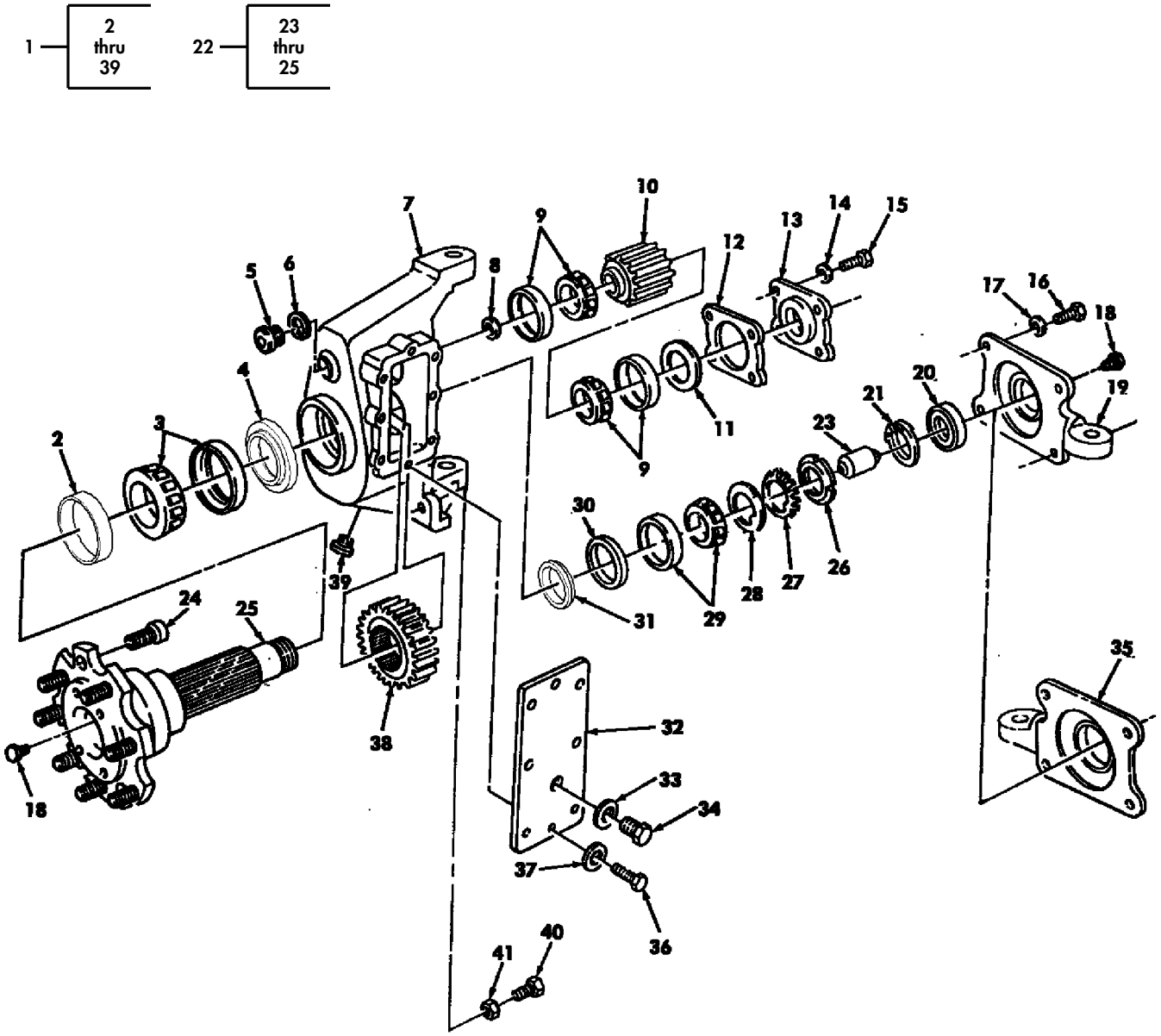

Figure 113. Front Knuckle and Geared Hub Assembly (Geared Hub P/N 6009352) (Serial Number 299999 and Below).

(1) ITEM NO	(2) SMR CODE	(3) NSN	(4) CAGEC	(5) PART NUMBER	(6) DESCRIPTION AND USABLE ON CODES(UOC)	(7) QTY
					GROUP 1004 STEERING AND LEANING WHEEL MECHANISIM	
					FIG. 113 FRONT KNUCKLE AND GEARED HUB ASSEMBLY(GEARED HUB P/N 6009352) (SERIAL NUMBER 299999 AND BELOW)	
1	PAOFF	2530014133653	34623	6009352	HUB BODY ASSEMBLY,FOUR WHEEL DRIVE..	2
2	PAOZZ	5330012036551	63769	CR 535094-60	.SEAL,PLAIN ENCASED OUTER.....	1
3	PAFZZ	3110004115937	34623	5568228	.BEARING,ROLLER,TAPE.....	1
4	PAFZZ	5365011748186	34623	5573989	.SPACER,RING OUTER.....	1
5	PAOZZ	5365002777341	24617	453006	.PLUG,MACHINE THREAD UPPER.....	1
6	PAOZZ	5310012310596	34623	5573688	.WASHER,LOCK UPPER.....	1
7	XAFFF		34623	5593993	.KNUCKLE AND GEAR.....	1
8	PAFZZ	5310014733373	34623	6009454	.SPACER,SLEEVE.....	1
9	PAFZZ	3110010274475	34623	5568226	.BEARING,ROLLER,TAPE UPPER.....	2
10	PAFZZ	3020014322553	34623	6009453	.GEAR,SPUR UPPER.....	1
11	PAOZZ	5330011809099	73680	200275-7	.SEAL,PLAIN ENCASED.....	1
12	PAOZZ	5330011760825	34623	5573692	.GASKET 0.005.....	V
13	PAOZZ	5340011748493	34623	5574002	.RETAINER UPPER.....	1
14	PAOZZ	5310000806004	96906	MS27183-14	.WASHER,FLAT UPPER 3/8.....	4
15	PAOZZ	5305000680510	80204	B1821BH038C100N	.SCREW,CAP HEXAGON H UPPER 3/8-16 X 1.00.....	4
16	PAOZZ	5305000712067	80204	B1821BH050C125N	.SCREW,CAP HEXAGON H 1/2-13 X 1.25.	4
17	PAOZZ	5310008095998	96906	MS27183-18	.WASHER,FLAT 1/2.....	4
18	PAOZZ	4730000127951	93334	127951	.PLUG,PIPE.....	2
19	PAOZZ	2530014338702	34623	6005121	.COVER,STEERING L.H.....	1
20	PAFZZ	5330014568823	34623	6005193	.SEAL ASSEMBLY,SPIN.....	1
21	PAFZZ	5325005141299	79136	5008-125MD	.RING,RETAINING.....	1
22	PAOZZ	2530014492495	34623	5715160	.SPINDLE AND STUD AS.....	1
23	PAFZZ	5365014142902	34623	5594531-B	..SPACER,SLEEVE.....	1
24	PAOZZ	5307011964937	34623	5568211	..STUD,SELF-LOCKING 9/16-18 X 1.50.	8
25	XAFZZ		34623	6009349	..SPINDLE,WHEEL.....	1
26	PAOZZ	5310013825031	19207	12342680	.NUT,PLAIN ROUND 1-3/8.....	1
27	PAOZZ	5310012134185	34623	5584462	.WASHER,KEY 1-3/8.....	1
28	PAOZZ	5310011748607	34623	5573684	.WASHER,KEY 3-3/8.....	1
29	PAFZZ	3110001005920	34623	5568227	.BEARING,ROLLER,TAPE INNER.....	1
30	PAFZZ	5365014562032	64623	6001784	.SPACER,RING.....	1
31	PAFZZ	5365014142895	34623	6009350	.SPACER,SLEEVE.....	1
32	PAFZZ	5340011742271	34623	5574924	.COVER,ACCESS.....	1
33	PAOZZ	5310011760839	34623	5573687	.WASHER,FLAT.....	1
34	PAOZZ	5365011775720	34623	5573690	.PLUG,MACHINE THREAD.....	1
35	PAOZZ	2530014338003	34623	6005120	.ARM,CONTROL R.H.....	1
36	PAFZZ	5306002264823	80204	B1821BH031C056N	.BOLT,MACHINE 5/16-18 X 5/8.....	8
37	PAFZZ	5310000814219	96906	MS27183-12	.WASHER,FLAT 5/16.....	8
38	PAFZZ	3020014762701	34623	6009452	.GEAR,SPUR LOWER.....	1
39	PAOZZ	4730000459769	96906	MS49006-6	.PLUG,PIPE,MAGNETIC.....	1
40	PAOZZ	5305000712069	80204	B1821BH050C150N	SCREW,CAP HEXAGON H 1/2-13 X 1.50.	2
41	PAOZZ	5310012729981	96906	MS51471-01	NUT,PLAIN HEXAGON 1/2-13.....	2

END OF FIGURE

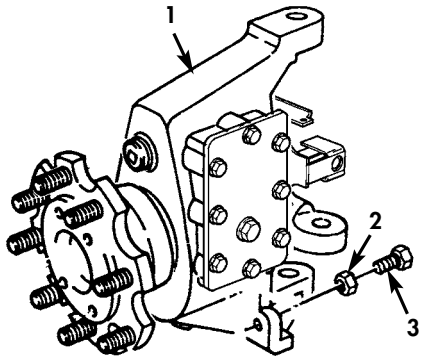

Figure 113A. Front Knuckle and Geared Hub Assembly (Serial Number 300000 and Above).

(1) ITEM NO	(2) SMR CODE	(3) NSN	(4) CAGEC	(5) PART NUMBER	(6) DESCRIPTION AND USABLE ON CODES(UOC)	(7) QTY
					GROUP 1004 STEERING AND LEANING WHEEL MECHANISM	
					FIG. 113A FRONT KNUCKLE AND GEARED HUB ASSEMBLY(SERIAL NUMBER 300000 AND ABOVE)	
* 1	PAOFF	2530015628935	34623	6041986	HUB BODY ASSEMBLY,F..... UOC:TTA,TTT,TT1,UUA,UUU,UU1,UU2	2
* 2	PAOZZ	5310012729981	96906	MS51471-01	NUT,PLAIN,HEXAGON 1/2-13..... UOC:TTA,TTT,TT1,UUA,UUU,UU1,UU2	2
* 3	PAOZZ	5305000712069	80204	B1821BH050C150N	SCREW,CAP,HEXAGON H 1/2-13 X 1.50.. UOC:TTA,TTT,TT1,UUA,UUU,UU1,UU2	2

END OF FIGURE

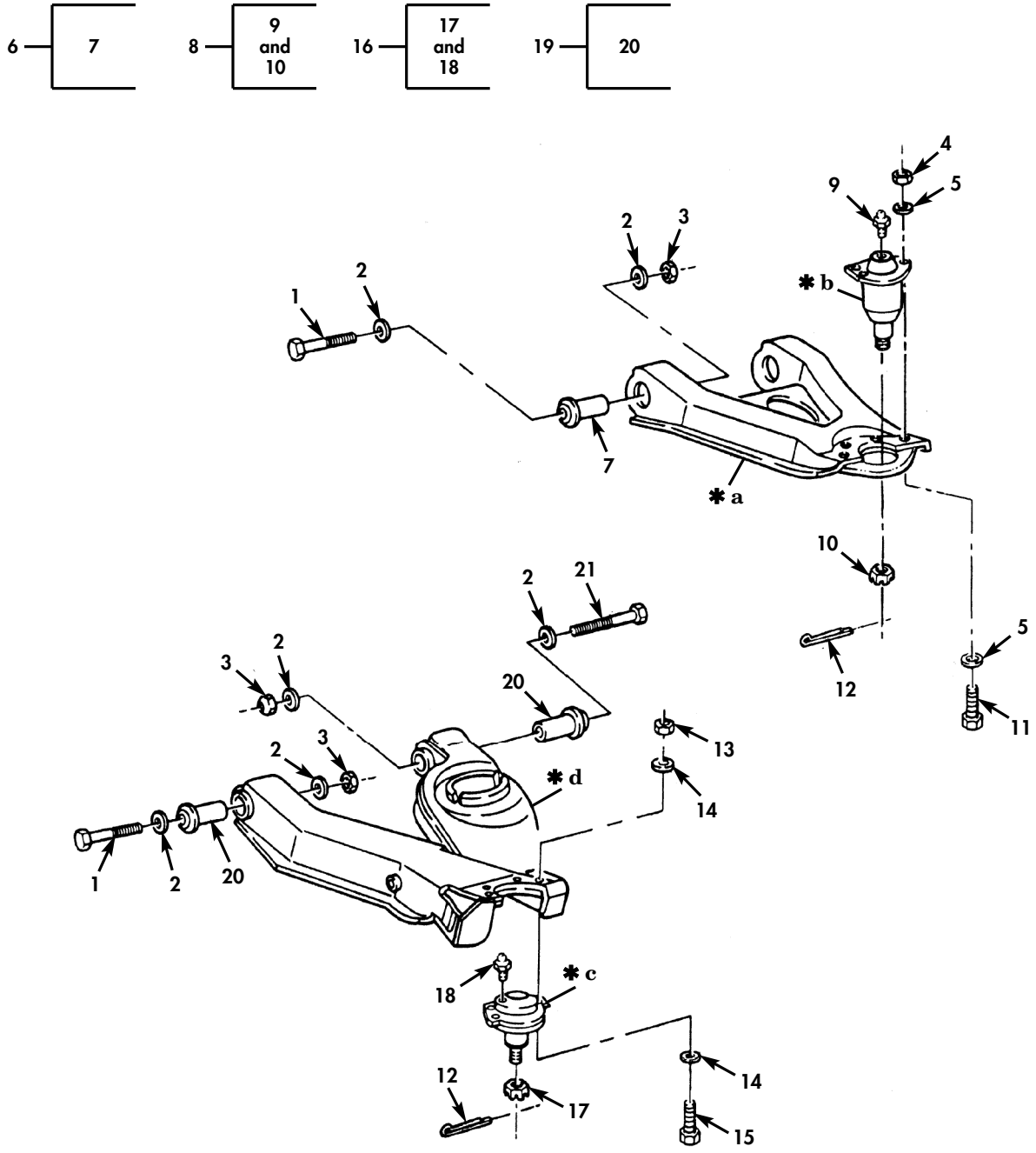

✱**a** PART OF ITEM 6
✱**b** PART OF ITEM 8
✱**c** PART OF ITEM 16
✱**d** PART OF ITEM 19

Figure 114. Front Control Arms, Ball Joints, and Mounting Hardware.

(1) ITEM NO	(2) SMR CODE	(3) NSN	(4) CAGEC	(5) PART NUMBER	(6) DESCRIPTION AND USABLE ON CODES(UOC)	(7) QTY
					GROUP 1004 STEERING AND LEANING WHEEL MECHANISM	
					FIG. 114 FRONT CONTROL ARMS, BALL JOINTS, AND MOUNTING HARDWARE	
* 1	PAOZZ	5305009474361	80204	B1821BH075C475N	SCREW,CAP,HEXAGON H 3/4-10 X 4.75...	6
* 2	PAOZZ	5310011474052	7X677	11609642	WASHER,FLAT 3/4.....	16
* 3	PAOZZ	5310004093333	81349	M45913/3-12CG8C	NUT,SELF-LOCKING,HE 3/4-10.....	8
* 4	PAOZZ	5310008140672	96906	M45913/3-6FG8C	NUT,SELF-LOCKING,HE 3/8-24.....	8
* 5	PAOZZ	5310014124013	24617	2436163	WASHER,FLAT 3/8.....	16
* 6	PAOFF	2530015548317	34623	6030624	ARM,CONTROL,VEHICUL UPPER,L.H.SERIAL NUMBER 259025 AND ABOVE..... UOC:TTA,TTT,TT1,UUA,UUU,UU1,UU2	1
* 6	PAOFF	2530015548340	34623	6030626	ARM,CONTROL,VEHICUL UPPER,R.H.SERIAL NUMBER 259025 AND ABOVE..... UOC:TTA,TTT,TT1,UUA,UUU,UU1,UU2	1
* 6	PAOFF	2530014147844	19207	12460167	ARM,CONTROL,VEHICUL UPPER,LH.SERIAL NUMBER 259024 AND BELOW..... UOC:XAA,XBB	1
* 6	PAOFF	2530014131365	19207	12460151	ARM,CONTROL,VEHICUL UPPER,RH.SERIAL NUMBER 259024 AND BELOW..... UOC:XAA,XBB	1
* 7	PAFZZ	5365015663907	76445	869370	.BUSHING,SLEEVE SERIAL NUMBER 295025 AND ABOVE..... UOC:TTA,TTT,TT1,UUA,UUU,UU1,UU2	2
* 7	PAFZZ	3120011865527	19207	12338270	.BUSHING,SLEEVE SERIAL NUMBER 295024 AND BELOW..... UOC:XAA,XBB	2
* 8	PAOZZ	2530015548288	34623	6026749	PARTS KIT,BALL JOIN UPPER FRONT SERIAL NUMBER 259025 AND ABOVE..... UOC:TTA,TTT,TT1,UUA,UUU,UU1,UU2	2
* 8	PAOZZ	2530014131366	63477	SE1589	PARTS KIT,BALL JOIN UPPER FRONT SERIAL NUMBER 259024 AND BELOW..... UOC:XXA,XXB	2
* 9	PAOZZ	4730000504203	81343	AS15001-1	.FITTING,LUBRICATION.....	1
* 10	PAOZZ	5310008507004	96906	MS35692-54	.NUT,PLAIN,SLOTTED,H 5/8-18.....	1
* 11	PAOZZ	5305014125994	19207	12460159	SCREW,CAP,HEXAGON H 3/8-24 X 5/8....	8
* 12	PAOZZ	5315000120123	80205	MS24665-355	PIN,COTTER 1/8 X 1-1/4.....	4
* 13	PAOZZ	5310011504003	24617	9422299	NUT,SELF-LOCKING,HE 7/16-14.....	8
* 14	PAOZZ	5310008094085	96906	MS27183-15	WASHER,FLAT 7/16.....	16
* 15	PAOZZ	5305000712055	80204	B1821BH044C150N	SCREW,CAP,HEXAGON H 7/16-14 X 1.50..	8
* 16	PAOZZ	2530015548307	34623	6030616	PARTS KIT,BALL JOIN LOWER SERIAL NUMBER 259025 AND ABOVE..... UOC:TTA,TTT,TT1,UUA,UUU,UU1,UU2	2
* 16	PAOZZ	3040014229390	63477	SE1590	PARTS KIT,BALL JOIN LOWER SERIAL NUMBER 295024 AND BELOW..... UOC:XXA,XXB	2

(1) ITEM NO	(2) SMR CODE	(3) NSN	(4) CAGEC	(5) PART NUMBER	(6) DESCRIPTION AND USABLE ON CODES(UOC)	(7) QTY
* 17	PAOZZ	5310008507004	96906	MS35692-54	.NUT,PLAIN,SLOTTED,H 5/8-18.....	1
* 18	PAOZZ	4730000504203	81343	AS15001-1	.FITTING,LUBRICATION.....	1
* 19	PAOFF	2530015548336	34623	6030627	ARM,CONTROL,VEHICUL LOWER R.H SERIAL NUMBER 259025 AND ABOVE..... UOC:TTA,TTT,TT1,UUA,UUU,UU1,UU2	1
* 19	PAOFF	2530015548270	34623	6030629	ARM,CONTROL,VEHICUL LOWER L.H SERIAL NUMBER 259025 AND ABOVE..... UOC:TTA,TTT,TT1,UUA,UUU,UU1,UU2	1
* 19	PAOFF	2530014208634	34623	6016750	ARM,CONTROL,VEHICUL LOWER R.H SERIAL NUMBER 259024 AND BELOW..... UOC:XXA,XXB	1
* 19	PAOFF	2530014207895	34623	6016751	ARM,CONTROL,VEHICUL LOWER L.H SERIAL NUMBER 259024 AND BELOW..... UOC:XXA,XXB	1
* 20	PAFZZ	5365015663907	76445	869370	.BUSHING,SLEEVE SERIAL NUMBER 259025 AND ABOVE..... UOC:TTA,TTT,TT1,UUA,UUU,UU1,UU2	2
* 20	PAFZZ	3120011865527	19207	12338270	.BUSHING,SLEEVE SERIAL NUMBER 259024 AND BELOW..... UOC:XXA,XXB	2
* 21	PAOZZ	5305009474362	80204	B1821BH075C500N	SCREW,CAP,HEXAGON H 3/4-10 X 5.00...	2

END OF FIGURE

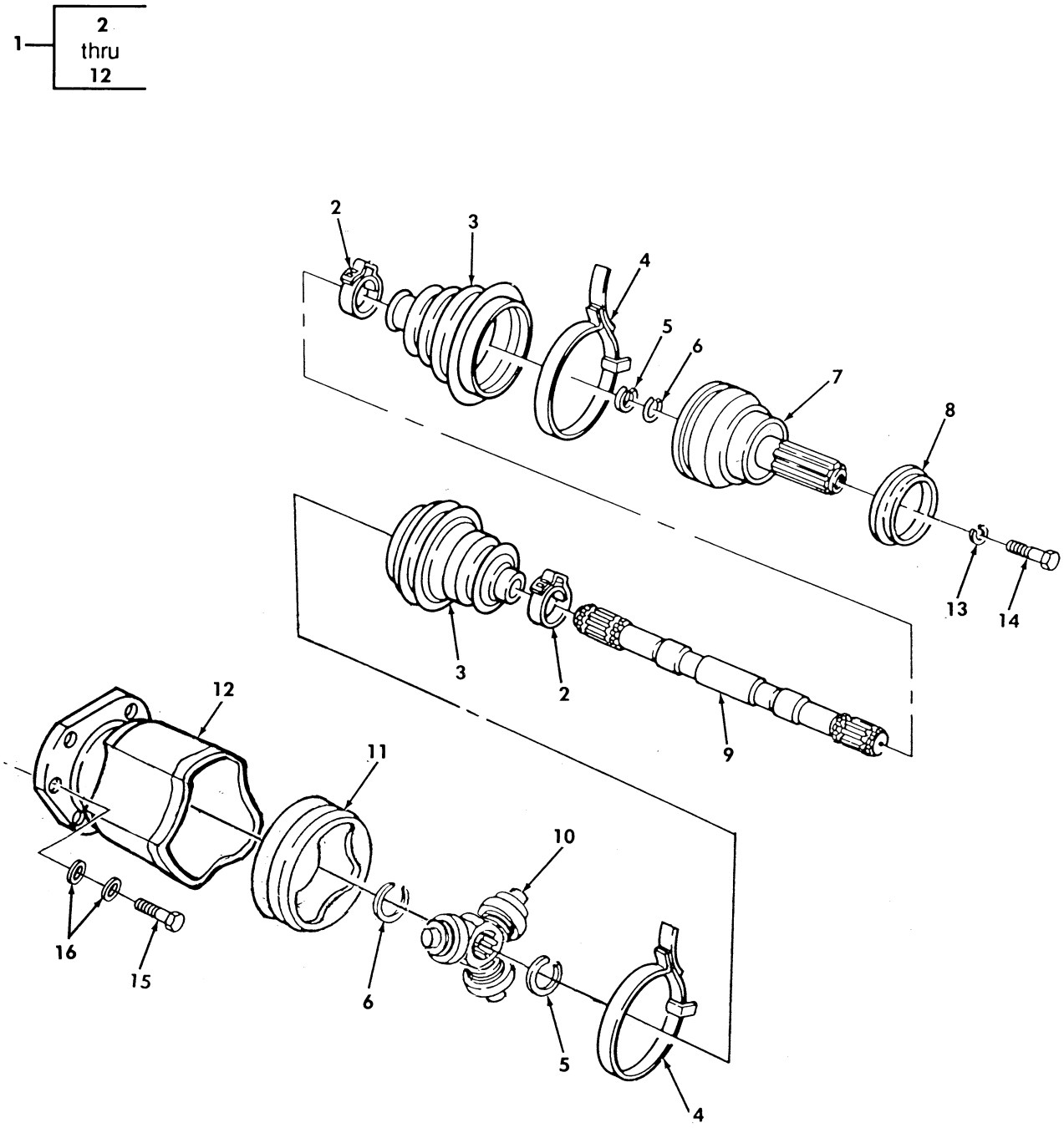

Figure 115. Rear Halfshaft Assembly, Left and Right Side.

(1) ITEM NO	(2) SMR CODE	(3) NSN	(4) CAGEC	(5) PART NUMBER	(6) DESCRIPTION AND USABLE ON CODES(UOC)	(7) QTY
					GROUP 11 REAR AXLE	
					1100 REAR AXLE ASSEMBLY	
					FIG. 115 REAR HALFSHAFT ASSEMBLY, LEFT AND RIGHT SIDE	
1	PAOOO	2520014780306	62626	EX4855-1	SHAFT,AXLE AUTOMOTI REAR.....	2
2	KFOZZ		62826	1400270	.CLAMP,LOOP 35.1 MM PART OF KIT P/N 2990056 PART OF KIT P/N 57K3515.....	2
3	KFOZZ		62826	2890019	.BOOT PART OF KIT P/B 2990056 PART OF KIT P/N 57K3515.....	2
4	KFOZZ		62826	1400271	.CLAMP,BOOT 106.8 MM PART OF KIT P/N 57K3515.....	2
* 5	KFOZZ		60826	209004	.RING,SPACER PART OF KIT P/N 2390086 PART OF KIT P/N 2990056 PART OF KIT P/N 57K3515.....	2
* 6	KFOZZ		62826	2090003	.RING,RETAINING PART OF KIT P/N 2390086 PART OF KIT P/N 2990054 PART PART OF KIT P/N 57K3515.....	2
7	KFOZZ		62826	2290033	.JOINT ASSEMBLY PART OF KIT P/N 2990056.....	1
8	PAOZZ	2530012969333	34623	5598209	.DEFLECTOR,DIRT AND PART OF KIT P/N 2990056.....	1
9	KFOZZ		62826	2790028	.SHAFT,SHOULDERED PART OF KIT P/N 2990056.....	1
* 10	KFOZZ		62826	2390036	.SPIDER ASSEMBLY PART OF KIT P/N 2390086.....	1
* 11	KFOZZ		62826	2390076	.INSERT PART OF KIT P/N 2390086....	1
* 12	KFOZZ		62826	2390074	.JOINT ASSEMBLY PLUNGED PART OF KIT P/N 2390086.....	1
13	PAOZZ	5310000115093	96906	MS35338-65	WASHER,LOCK 3/8.....	2
14	PAOZZ	5305000680511	80204	B1821BH038C125N	SCREW,CAP HEXAGON H 3/8-16 X 1.25..	2
15	PAOZZ	5306011857048	7X677	11513606	BOLT,MACHINE 10-1.5 X 35 MM.....	12
16	PAOZZ	5310014573292	34623	6008029	WASHER,LOCK 10 MM.....	24

END OF FIGURE

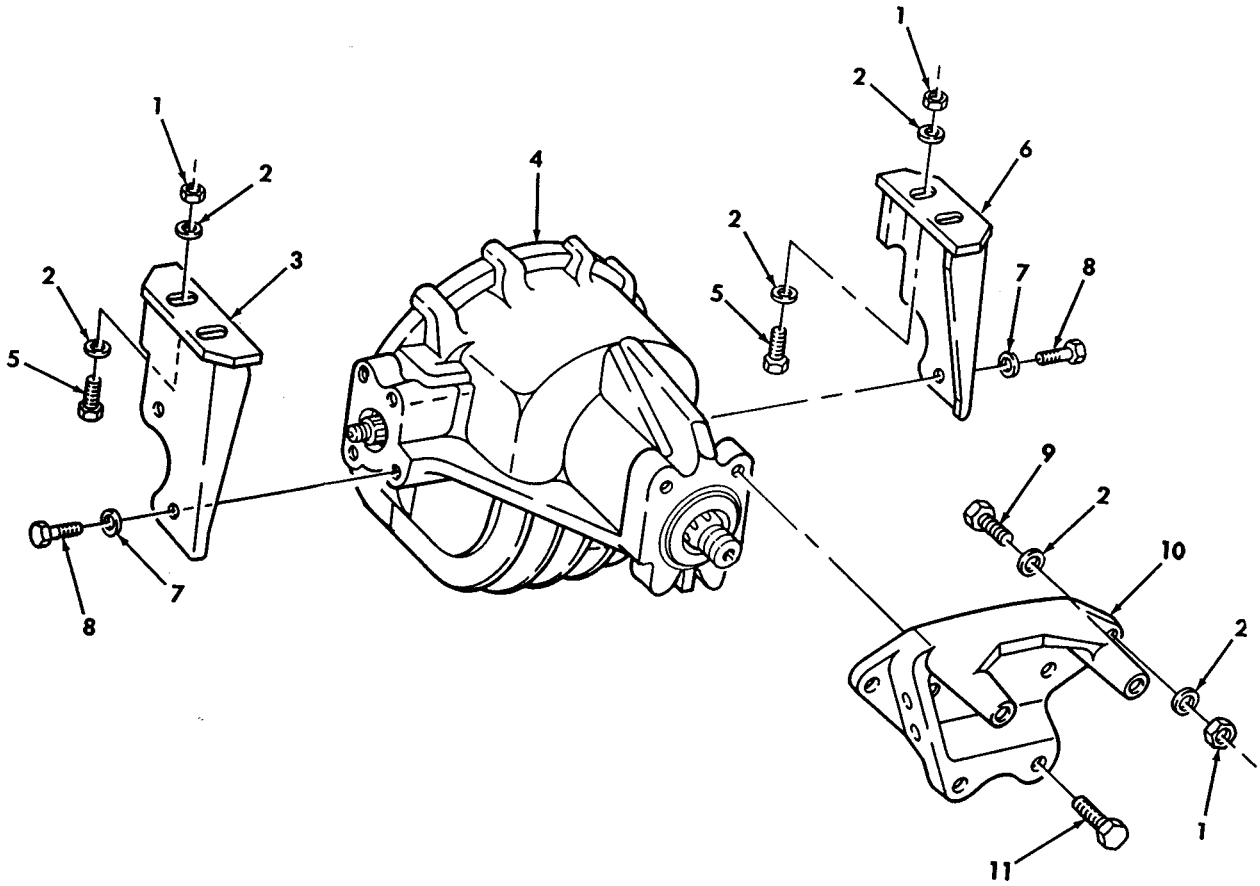

FOR BREAKDOWN PARTS OF
ITEM 4, SEE FIGURE 117

Figure 116. Rear Axle Differential, Mounting Brackets, and Hardware (Serial Number 299999 and Below).

(1) ITEM NO	(2) SMR CODE	(3) NSN	(4) CAGEC	(5) PART NUMBER	(6) DESCRIPTION AND USABLE ON CODES(UOC)	(7) QTY
					GROUP 1102 DIFFERENTIAL	
					FIG. 116 REAR AXLE DIFFERENTIAL, MOUNTING BRACKETS,AND HARDWARE (SERIAL NUMBER 299999 AND BELOW)	
1	PAFZZ	5310004883889	96906	MS51943-39	NUT,SELF-LOCKING,HE 1/2-13.....	6
2	PAFZZ	5310008898782	34623	5593416	WASHER,FLAT 1/2.....	12
3	PAFZZ	2590013948134	34623	12338151-7	BRACKET,VEHICULAR C REAR AXLE,R.H..	1
4	PAFHH	2520014165217	34623	RCSK17305	DIFFERENTIAL,DRIVIN REAR.....	1
4	PAFHH	2520014989104	97271	606279	DIFFERENTIAL,DRIVIN REAR WITH OIL COOLER.....	1
5	PAFZZ	5305000712069	80204	B1821BH050C150N	SCREW,CAP,HEXAGON H 1/2-13 X 1.50..	4
6	PFFZA	5340014617851	19207	12338151-6	BRACKET,MOUNTING REAR AXLE,L.H.....	1
7	PAFZZ	5310011517347	24617	2436167	WASHER,FLAT 5/8.....	4
8	PAFZZ	5305007247219	80204	B1821BH063C125N	SCREW,CAP,HEXAGON H REAR,5/8-11 X 1.25.....	4
9	PAFZZ	5305000712076	80204	B1821BH050C325N	SCREW,CAP,HEXAGON H 1/2-13 X 3.00..	2
10	PAFZZ	5340013017929	19207	12341900	BRACKET,MOUNTING.....	1
11	PAFZZ	5305007247220	80204	B1821BH063C150N	SCREW,CAP,HEXAGON H 5/8-11 X 1.50..	2

END OF FIGURE

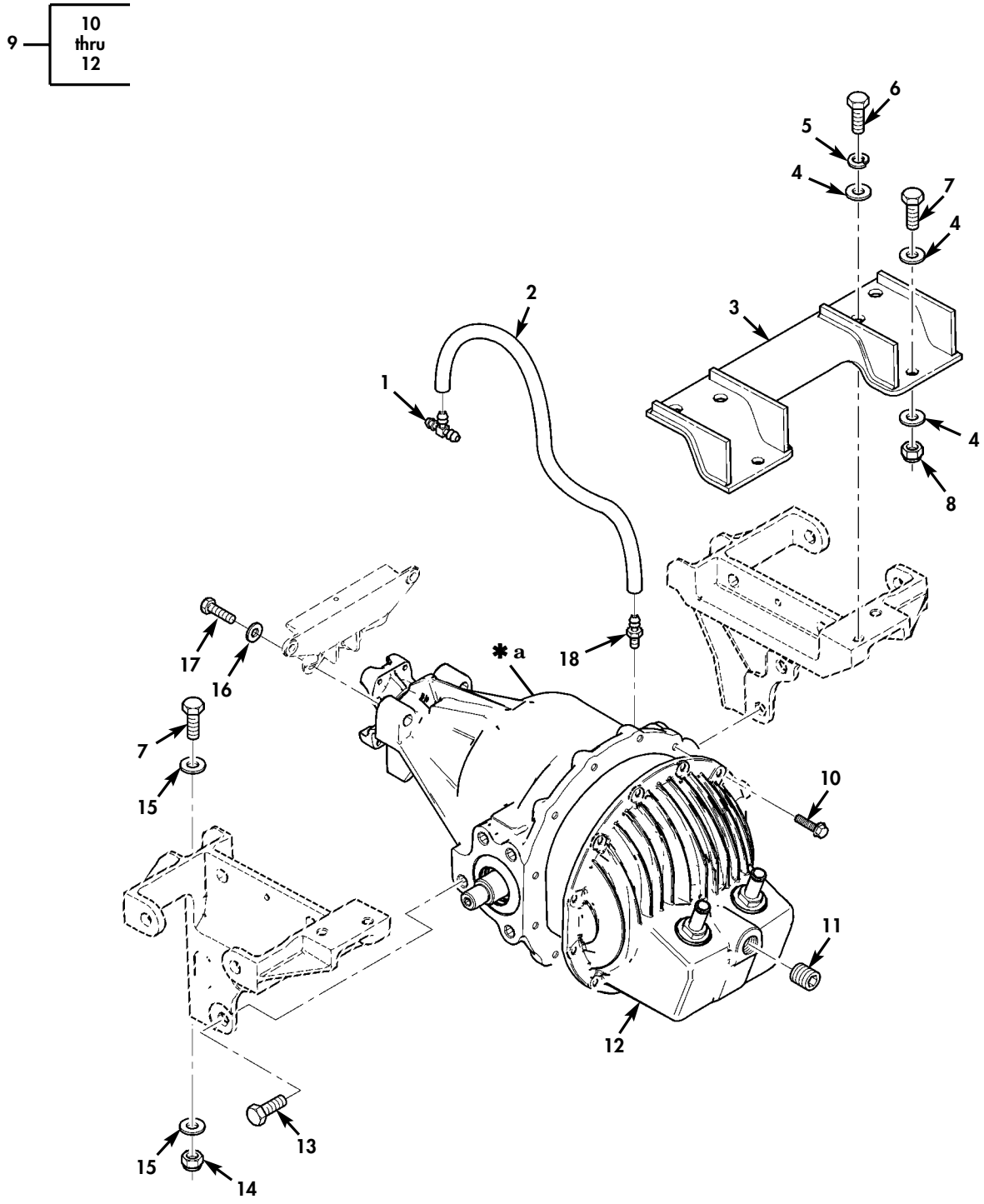

✱**a** PART OF ITEM 9

Figure 116A. Rear Differential Assembly and Related Parts (Serial Number 300000 and Above).

(1) ITEM NO	(2) SMR CODE	(3) NSN	(4) CAGEC	(5) PART NUMBER	(6) DESCRIPTION AND USABLE ON CODES(UOC)	(7) QTY
					GROUP 1102 DIFFERENTIAL	
					FIG. 116A REAR DIFFERENTIAL ASSEMBLY AND RELATED PARTS(SERIAL NUMBER 300000 AND ABOVE)	
* 1	PAOZZ	4730010035105	93061	224-4-4-5/32	TEE,HOSE..... UOC:TTA,TTT,TT1,UUA,UUU,UU1,UU2	1
* 2	MOOZZ		19207	CPR104420-1-17	TUBING,NONMETALLIC MAKE FROM TUBING P/N CPR104420-1,17 INCHES LONG..... UOC:TTA,TTT,TT1,UUA,UUU,UU1,UU2	1
* 3	PAFZZ	2590015684571	34623	6042370	BRACKET,VEHICULAR C..... UOC:TTA,TTT,TT1,UUA,UUU,UU1,UU2	1
* 4	PAFZZ	5310011211703	24617	2436165	WASHER,FLAT 1/2..... UOC:TTA,TTT,TT1,UUA,UUU,UU1,UU2	8
* 5	PAFZZ	5310005845272	80205	MS35338-48	WASHER,LOCK 1/2..... UOC:TTA,TTT,TT1,UUA,UUU,UU1,UU2	4
* 6	PAFZZ	5305000712069	80204	B1821BH050C150N	SCREW,CAP,HEXAGON H 1/2-13 X 1.50.. UOC:TTA,TTT,TT1,UUA,UUU,UU1,UU2	4
* 7	PAFZZ	5305000712068	80204	B1821BH050C138N	SCREW,CAP,HEXAGON H 1/2-13 X 1.375. UOC:TTA,TTT,TT1,UUA,UUU,UU1,UU2	4
* 8	PAFZZ	5310004883889	96906	MS51943-39	NUT,SELF-LOCKING,HE 1/2-13..... UOC:TTA,TTT,TT1,UUA,UUU,UU1,UU2	2
* 9	PAFHH	2520015744828	97271	606279-2	DIFFERENTIAL,DRIVIN..... UOC:TTA,TTT,TT1,UUA,UUU,UU1,UU2	1
* 10	PAFZZ	5306014886213	19207	12448438-18	.BOLT,MACHINE 5/16-18 X 1.00..... UOC:TTA,TTT,TT1,UUA,UUU,UU1,UU2	12
* 11	PAFZZ	4730012573348	34623	5597050	.PLUG,PIPE..... UOC:TTA,TTT,TT1,UUA,UUU,UU1,UU2	1
* 12	PAFZZ		97271	85914	.COVER,ACCESS..... UOC:TTA,TTT,TT1,UUA,UUU,UU1,UU2	1
* 13	PAFZZ	5305000712513	80204	B1821BH025C250N	SCREW,CAP,HEXAGON H 1/4-20 X 2.50.. UOC:TTA,TTT,TT1,UUA,UUU,UU1,UU2	4
* 14	PAFZZ	5310004883889	96906	MS51943-39	NUT,SELF-LOCKING,HE 1/2-13..... UOC:TTA,TTT,TT1,UUA,UUU,UU1,UU2	2
* 15	PAFZZ	5310011211703	24617	2436165	WASHER,FLAT 1/2..... UOC:TTA,TTT,TT1,UUA,UUU,UU1,UU2	4
* 16	PAFZZ	5310011517347	24617	2436167	WASHER,FLAT 5/8..... UOC:TTA,TTT,TT1,UUA,UUU,UU1,UU2	2
* 17	PAFZZ	5305007247220	80204	B1821BH063C150N	SCREW,CAP,HEXAGON H 5/8-11 X 1.50.. UOC:TTA,TTT,TT1,UUA,UUU,UU1,UU2	2
* 18	PAFZZ	4730011855348	19207	12339978	ADAPTER,STRAIGHT,PI..... UOC:TTA,TTT,TT1,UUA,UUU,UU1,UU2	1

END OF FIGURE

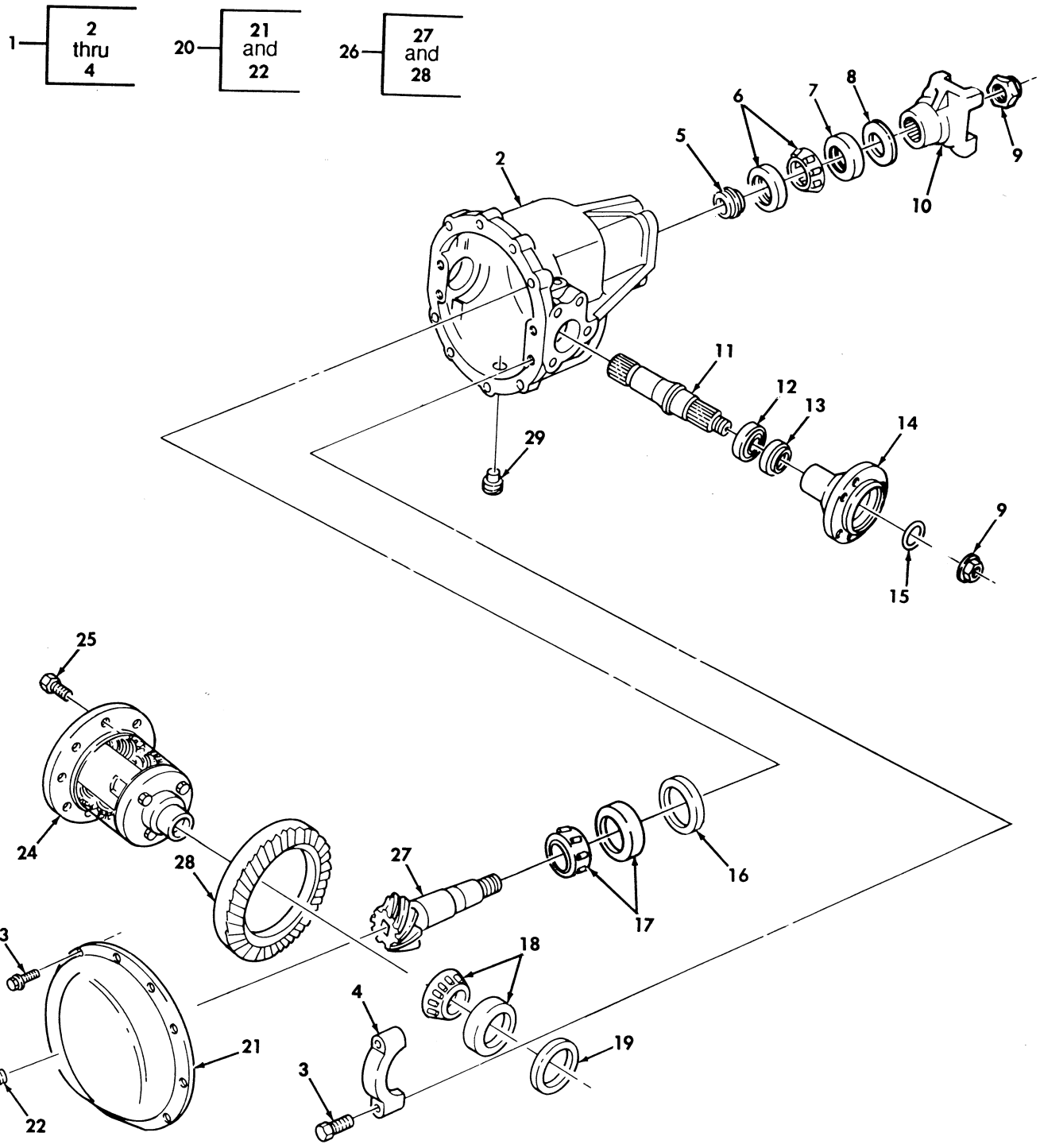

REAR DIFFERENTIAL WITH
COOLER, SEE FIGURE 117A

Figure 117. Axle Differential.

(1) ITEM NO	(2) SMR CODE	(3) NSN	(4) CAGEC	(5) PART NUMBER	(6) DESCRIPTION AND USABLE ON CODES(UOC)	(7) QTY
					GROUP 1102 DIFFERENTIAL	
					FIG. 117 AXLE DIFFERENTIAL	
1	PFHZZ	3040011749130	34623	5579424	HOUSING,MECHANICAL.....	1
2	XAHZZ		34623	5583758	.HOUSING.....	1
* 3	PAHZZ	5306012542358	34623	5755648	.BOLT,MACHINE 1/2-13 X 2.35.....	4
4	XAHZZ		34623	5579426	.CAP.....	2
5	PAHZZ	5365011802585	34623	5579450	SPACER,SLEEVE.....	1
6	PAHZZ	3110008541504	60038	M88048-M88010	BEARING,ROLLER,TAPE.....	2
7	PAFZZ	5330011748146	95019	41292	SEAL,PLAIN ENCASED.....	1
8	PAFZZ	2520012975200	34623	12460375	DEFLECTOR,DIRT AND.....	1
9	PAFZZ	5310011750617	34623	5579442	NUT,SELF-LOCKING,HE 7/8-14.....	3
10	PAFZZ	2520012677371	34623	12460374	YOKE,UNIVERSAL JOIN FRONT.....	1
* 10	PAFZZ	2520014323492	95019	3-4-11931	YOKE,UNIVERSAL JOIN REAR.....	1
11	PAHZZ	2520011749580	34623	6010942	SHAFT,AXLE,AUTOMOTI.....	1
12	PAHZZ	3110001556152	21335	P207K	BEARING,BALL,ANNULA.....	2
13	PAFZZ	5330011748145	34623	6009472	SEAL,PLAIN ENCASED.....	2
14	PAFZZ	2520014566660	34623	EX4856	FLANGE,OUTPUT SHAFT.....	2
15	PAFZZ	5331010841200	34623	5939517	O-RING.....	2
16	PAHZZ	5365013814487	34623	5579445-54	SPACER,RING 0.1110-0.1120 PART OF KIT P/N 5579445.....	1
16	PAHZZ	5365013823676	34623	5579445-55	SPACER,RING 0.1099-0.1109 PART OF KIT P/N 5579445.....	1
16	PAHZZ	5365013820973	34623	5579445-56	SPACER,RING 0.1088-0.1098 PART OF KIT P/N 5579445.....	1
16	PAHZZ	5365013823710	34623	5579445-57	SPACER,RING 0.1077-0.1087 PART OF KIT P/N 5579445.....	1
16	PAHZZ	5365013821170	34623	5579445-58	SPACER,RING 0.1066-0.1076 PART OF KIT P/N 5579445.....	1
16	PAHZZ	5365013821235	34623	5579445-59	SPACER,RING 0.1055-0.1065 PART OF KIT P/N 5579445.....	1
16	PAHZZ	5365013821181	34623	5579445-60	SPACER,RING 0.1044-0.1054 PART OF KIT P/N 5579445.....	1
16	PAHZZ	5365013821135	34623	5579445-61	SPACER,RING 0.1033-0.1043 PART OF KIT P/N 5579445.....	1
16	PAHZZ	5365013821177	34623	5579445-62	SPACER,RING 0.1022-0.1032 PART OF KIT P/N 5579445.....	1
16	PAHZZ	5365013821162	34623	5579445-63	SPACER,RING 0.1011-0.1021 PART OF KIT P/N 5579445.....	1
16	PAHZZ	5365013823693	34623	5579445-64	SPACER,RING 0.1000-0.1010 PART OF KIT P/N 5579445.....	1
16	PAHZZ	5365013823726	34623	5579445-65	SPACER,RING 0.0989-0.0999 PART OF KIT P/N 5579445.....	1
16	PAHZZ	5365013821273	34623	5579445-66	SPACER,RING 0.0978-0.0988 PART OF KIT P/N 5579445.....	1
16	PAHZZ	5365013821166	34623	5579445-67	SPACER,RING 0.0967-0.0977 PART OF KIT P/N 5579445.....	1
16	PAHZZ	5365013821157	34623	5579445-68	SPACER,RING 0.0956-0.0966 PART OF KIT P/N 5579445.....	1
16	PAHZZ	5365013821240	34623	5579445-69	SPACER,RING 0.0945-0.0955 PART OF KIT P/N 5579445.....	1
16	PAHZZ	5365013823718	34623	5579445-70	SPACER,RING 0.0943-0.0944 PART OF KIT P/N 5579445.....	1

(1) ITEM NO	(2) SMR CODE	(3) NSN	(4) CAGEC	(5) PART NUMBER	(6) DESCRIPTION AND USABLE ON CODES(UOC)	(7) QTY
16	PAHZZ	5365013821132	34623	5579445-71	SPACER,RING 0.0923-0.0933 PART OF KIT P/N 5579445.....	1
16	PAHZZ	5365013821171	34623	5579445-72	SPACER,RING 0.0912-0.0922 PART OF KIT P/N 5579445.....	1
16	PAHZZ	5365013823715	34623	5579445-73	SPACER,RING 0.0901-0.0911 PART OF KIT P/N 5579445.....	1
16	PAHZZ	5365013884449	34623	5579445-74	SPACER,RING 0.0890-0.0900 PART OF KIT P/N 5579445.....	1
16	PAHZZ	5365013823694	34623	5579445-75	SPACER,RING 0.0879-0.0889 PART OF KIT P/N 5579445.....	1
16	PAHZZ	5365013821159	34623	5579445-76	SPACER,RING 0.0868-0.0878 PART OF KIT P/N 5579445.....	1
16	PAHZZ	5365013823447	34623	5579445-77	SPACER,RING 0.0875-0.0876 PART OF KIT P/N 5579445.....	1
16	PAHZZ	5365013823700	34623	5579445-78	SPACER,RING 0.0846-0.0856 PART OF KIT P/N 5579445.....	1
16	PAHZZ	5365013821058	34623	5579445-79	SPACER,RING 0.0835-0.0845 PART OF KIT P/N 5579445.....	1
17	PAHZZ	3110004069608	60038	M802048M802011	BEARING,ROLLER,TAPE.....	1
18	PAHZZ	3110008920896	60038	LM603049LM603012	BEARING,ROLLER,TAPE.....	2
19	PAHZZ	5365013815166	34623	5579453-44	SPACER,RING 0.0745-0.0755 PART OF KIT P/N 5579453.....	1
19	PAHZZ	5365013819582	34623	5579453-45	SPACER,RING 0.0756-0.0766 PART OF KIT P/N 5579453.....	1
19	PAHZZ	5365013815174	34623	5579453-46	SPACER,RING 0.0767-0.0777 PART OF KIT P/N 5579453.....	1
19	PAHZZ	5365013816332	34623	5579453-47	SPACER,RING 0.0778-0.0788 PART OF KIT P/N 5579453.....	1
19	PAHZZ	5365013816120	34623	5579453-48	SPACER,RING 0.0789-0.0799 PART OF KIT P/N 5579453.....	1
19	PAHZZ	5365013805345	34623	5579453-49	SPACER,RING 0.0800-0.0810 PART OF KIT P/N 5579453.....	1
19	PAHZZ	5365013816151	34623	5579453-50	SPACER,RING 0.0811-0.0821 PART OF KIT P/N 5579453.....	1
19	PAHZZ	5365013816276	34623	5579453-51	SPACER,RING 0.0822-0.0832 PART OF KIT P/N 5579453.....	1
19	PAHZZ	5365013816223	34623	5579453-52	SPACER,RING 0.0833-0.0843 PART OF KIT P/N 5579453.....	1
19	PAHZZ	5365013816080	34623	5579453-53	SPACER,RING 0.0844-0.0854 PART OF KIT P/N 5579453.....	1
19	PAHZZ	5365013816250	34623	5579453-54	SPACER,RING 0.0855-0.0865 PART OF KIT P/N 5579453.....	1
19	PAHZZ	5365013816145	34623	5579453-55	SPACER,RING 0.0866-0.0876 PART OF KIT P/N 5579453.....	1
19	PAHZZ	5365013816174	34623	5579453-56	SPACER,RING 0.0877-0.0887 PART OF KIT P/N 5579453.....	1
19	PAHZZ	5365013816210	34623	5579453-57	SPACER,RING 0.0888-0.0898 PART OF KIT P/N 5579453.....	1
19	PAHZZ	5365013816292	34623	5579453-58	SPACER,RING 0.0899-0.0909 PART OF KIT P/N 5579453.....	1
19	PAHZZ	5365013816110	34623	5579453-59	SPACER,RING 0.0910-0.0920 PART OF KIT P/N 5579453.....	1
19	PAHZZ	5365013816158	34623	5579453-60	SPACER,RING 0.0921-0.0931 PART OF KIT P/N 5579453.....	1
19	PAHZZ	5365013816313	34623	5579453-61	SPACER,RING 0.0932-0.0942 PART OF	1

(1) ITEM NO	(2) SMR CODE	(3) NSN	(4) CAGEC	(5) PART NUMBER	(6) DESCRIPTION AND USABLE ON CODES(UOC)	(7) QTY
					KIT P/N 5579453.....	
19	PAHZZ	5365013816226	34623	5579453-62	SPACER,RING 0.0943-0.0953 PART OF KIT P/N 5579453.....	1
19	PAHZZ	5365013816076	34623	5579453-63	SPACER,RING 0.0954-0.0964 PART OF KIT P/N 5579453.....	1
19	PAHZZ	5365013816303	34623	5579453-64	SPACER,RING 0.0965-0.0975 PART OF KIT P/N 5579453.....	1
19	PAHZZ	5365013816164	34623	5579453-65	SPACER,RING 0.0976-0.0986 PART OF KIT P/N 5579453.....	1
19	PAHZZ	5365013816197	34623	5579453-66	SPACER,RING 0.0987-0.0997 PART OF KIT P/N 5579453.....	1
19	PAHZZ	5365013816229	34623	5579453-67	SPACER,RING 0.0998-0.1008 PART OF KIT P/N 5579453.....	1
19	PAHZZ	5365013816086	34623	5579453-68	SPACER,RING 0.1009-0.1019 PART OF KIT P/N 5579453.....	1
19	PAHZZ	5365013816122	34623	5579453-69	SPACER,RING 0.1020-0.1030 PART OF KIT P/N 5579453.....	1
19	PAHZZ	5365013816154	34623	5579453-70	SPACER,RING 0.1031-0.1041 PART OF KIT P/N 5579453.....	1
19	PAHZZ	5365013816188	34623	5579453-71	SPACER,RING 0.1042-0.1052 PART OF KIT P/N 5579453.....	1
19	PAHZZ	5365013816317	34623	5579453-72	SPACER,RING 0.1053-0.1063 PART OF KIT P/N 5579453.....	1
19	PAHZZ	5365013816240	34623	5579453-73	SPACER,RING 0.1064-0.1074 PART OF KIT P/N 5579453.....	1
19	PAHZZ	5365013816112	34623	5579453-74	SPACER,RING 0.1075-0.1085 PART OF KIT P/N 5579453.....	1
19	PAHZZ	5365013816258	34623	5579453-75	SPACER,RING 0.1086-0.1096 PART OF KIT P/N 5579453.....	1
19	PAHZZ	5365013816165	34623	5579453-76	SPACER,RING 0-1097-0.1107 PART OF KIT P/N 5579453.....	1
19	PAHZZ	5365013816211	34623	5579453-77	SPACER,RING 0.1108-0.1118 PART OF KIT P/N 5579453.....	1
19	PAHZZ	5365013819588	34623	5579453-78	SPACER,RING 0.1119-0.1129 PART OF KIT P/N 5579453.....	1
19	PAHZZ	5365014381556	34623	5579453-79	SPACER,RING 0.1130-0.1140 PART OF KIT P/N 5579453.....	1
19	PAHZZ	5365013816113	34623	5579453-80	SPACER,RING 0.1141-0.1151 PART OF KIT P/N 5579453.....	1
19	PAHZZ	5365013816261	34623	5579453-81	SPACER,RING 0.1152-0.1162 PART OF KIT P/N 5579453.....	1
19	PAHZZ	5365013816175	34623	5579453-82	SPACER,RING 0.1163-0.1173 PART OF KIT P/N 5579453.....	1
19	PAHZZ	5365013816278	34623	5579453-83	SPACER,RING 0.1174-0.1184 PART OF KIT P/N 5579453.....	1
* 20	PAHZZ	2520012102624	34623	5582303	COVER,DIFFERENTIAL SERIAL NUMBER 192463 THROUGH 299999,FOR REAR COVER ONLY,FRONT COVER USED ON ALL SERIAL NUMBERS.....	1
* 21	XAHZZ		34623	5579436	.COVER 5/16-18 X 5/8 SERIAL NUMBER 192463 THROUGH 299999,FOR REAR COVER ONLY,FRONT COVER USED ON ALL SERIAL NUMBERS.....	1
* 22	PAOZZ	4730012573348	34623	5597050	.PLUG,PIPE 1/2-14 SERIAL NUMBER 192463 THROUGH 299999,FOR REAR COVER ONLY,FRONT COVER USED ON ALL SERIAL NUMBERS.....	1

(1) ITEM NO	(2) SMR CODE	(3) NSN	(4) CAGEC	(5) PART NUMBER	(6) DESCRIPTION AND USABLE ON CODES(UOC)	(7) QTY
23	PAHZZ	5306002264824	80204	B1821BH031C063N	SCREW,MACHINE 5/16-18 X 5/8.....	12
24	PAHZZ		34623	6023000	DIFFERENTIAL GEAR U.....	1
25	PAHZZ	5305006897472	80205	MS35308-384	SCREW,CAP,HEXAGON H 7/16-20 X 7/8..	8
26	PAHZZ	3020014441846	34623	RCSK17306	GEAR SET,BEVEL,MATC.....	1
27	XAHZZ		34623	RCSK17306-1	.PINION GEAR.....	1
28	XAHZZ		34623	RCSK17306-2	.RING.....	1
29	PAOZZ	4730012519373	36540	5044121	PLUG,PIPE,MAGNETIC 1/2-14 X 0.61...	1

END OF FIGURE

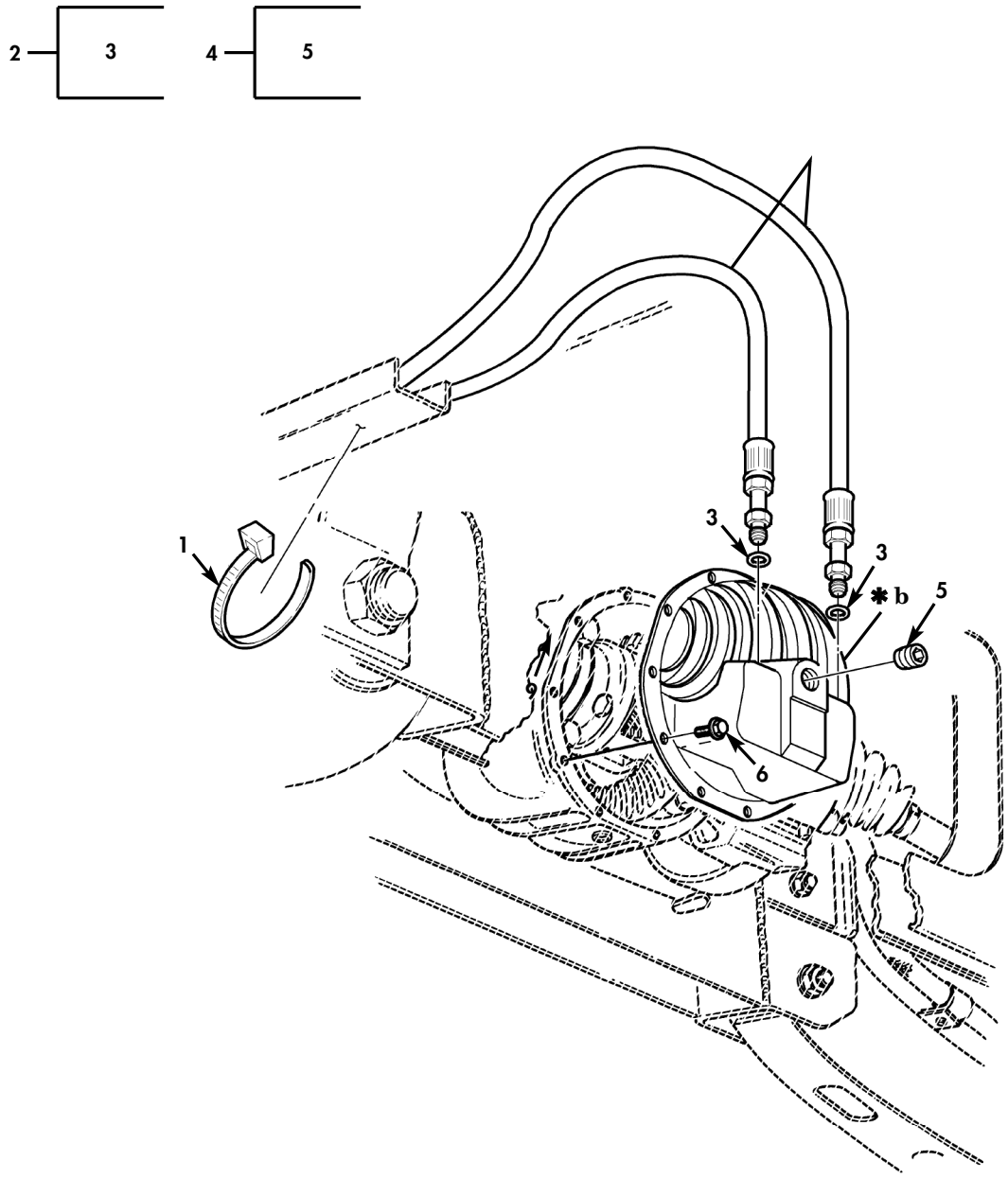

✱**a** PART OF ITEM 2
✱**b** PART OF ITEM 4

Figure 117A. Rear Differential Oil Cooler Cover, Lines, and Related Parts (Serial Number 192464 through 299999).

(1) ITEM NO	(2) SMR CODE	(3) NSN	(4) CAGEC	(5) PART NUMBER	(6) DESCRIPTION AND USABLE ON CODES(UOC)	(7) QTY
					GROUP 1102 STEERING AND LEANING WHEEL MECHANISIM	
					FIG. 117A REAR DIFFERENTIAL OIL COOLER COVER,LINES,AND RELATED PARTS (SERIAL NUMBER 192464 THROUGH 299999)	
1	PAOZZ	5975010482922	81343	MS3367-6-0	STRAP,TIEDOWN ELECT.....	1
2	PAOZZ	4720014886426	19207	12469512	HOSE ASSEMBLY.....	2
3	PAOZZ	5331002221709	81343	MS9386-011	.O-RING.....	2
4	PAOZZ	5340014886234	92721	80612	COVER,ACCESS.....	1
5	PAOZZ	4730012573348	34623	5597050	.PLUG,PIPE.....	1
6	PAOZZ	5306014886213	19207	12448438-18	BOLT,MACHINE.....	12

END OF FIGURE

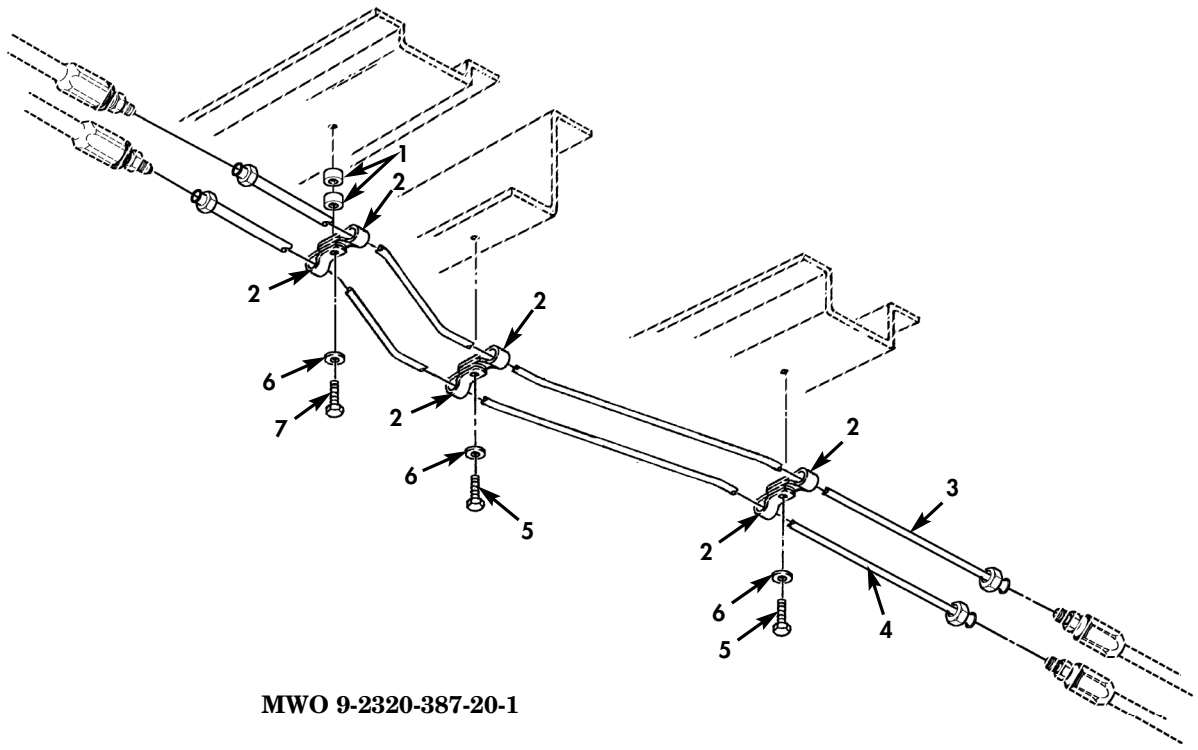

MWO 9-2320-387-20-1

Figure 117B. Rear Crossmember, Rear Differential Oil Cooler Lines (Serial Number 299999 and Below).

(1) ITEM NO	(2) SMR CODE	(3) NSN	(4) CAGEC	(5) PART NUMBER	(6) DESCRIPTION AND USABLE ON CODES(UOC)	(7) QTY
					GROUP 1102 STEERING AND LEANING WHEEL MECHANISIM	
					FIG. 117B REAR CROSSMEMBER, REAR DIFFERENTIAL OIL COOLER LINES (SERIAL NUMBER 299999 AND BELOW)	
1	PAOZZ	5365012728376	34623	5598113	SPACER,SLEEVE.....	2
2	PAOZZ	5340018091492	02769	310-8	CLAMP,LOOP.....	6
3	PAOZZ	4710014886311	19207	12469510	TUBE,BENT METALLIC.....	1
4	PAOZZ	4710014886241	19207	12469509	TUBE,BENT METALLIC.....	1
5	PAOZZ	5305019133640	96906	MS51851-85	SCREW,TAPPING.....	2
6	PAOZZ	5310011023270	24617	2436161	WASHER,FLAT.....	3
7	PAOZZ	5305000712510	80204	B1821BH025C175N	SCREW,CAP,HEXAGON H.....	1

END OF FIGURE

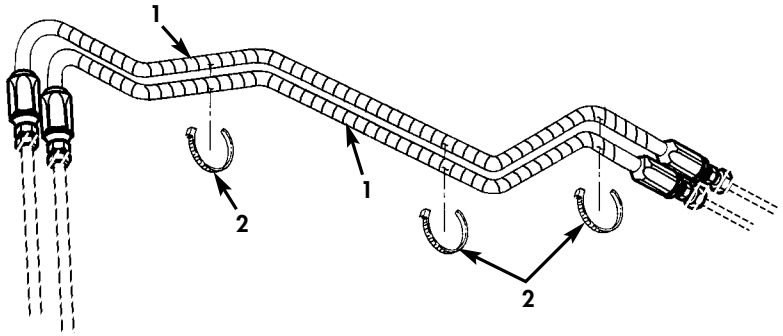

MWO 9-2320-387-20-1

Figure 117C. Rear Crossmember to Frame Rail Rear Differential Oil Cooler Flexible Brake Lines (Serial Number 299999 and Below).

(1) ITEM NO	(2) SMR CODE	(3) NSN	(4) CAGEC	(5) PART NUMBER	(6) DESCRIPTION AND USABLE ON CODES(UOC)	(7) QTY
					GROUP 1102 STEERING AND LEANING WHEEL MECHANISIM	
					FIG. 117C REAR CROSSMEMBER TO FRAME RAIL REAR DIFFERENTIAL OIL COOLER FLEXIBLE BRAKE LINES (SERIAL NUMBER 299999 AND BELOW)	
1	PAOZZ	4720014886424	19207	12469511	HOSE ASSEMBLY,NONME.....	2
2	PAOZZ	5975009856630	96906	MS3367-3-0	STRAP,TIEDOWN ELECT.....	3

END OF FIGURE

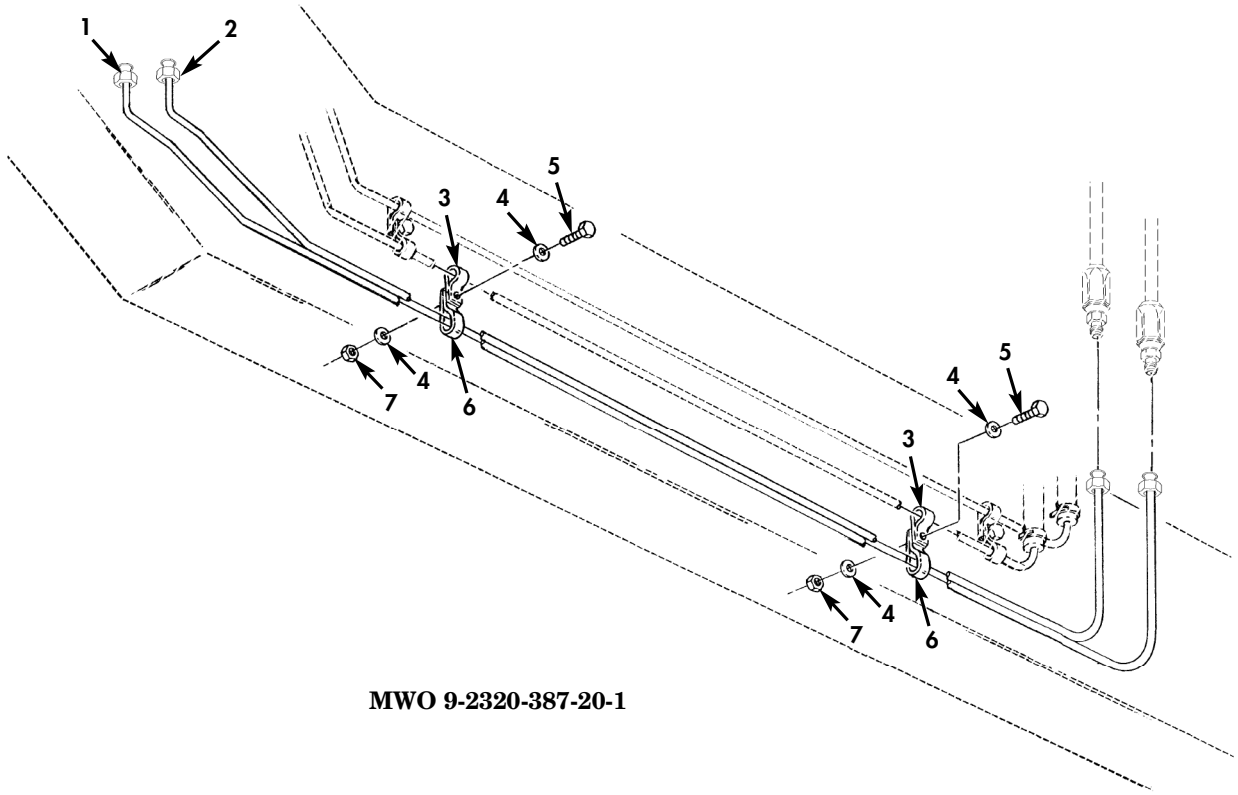

Figure 117D. Rear Frame Rail Rear Differential Oil Cooler Lines and Mounting Hardware (Serial Number 299999 and Below).

(1) ITEM NO	(2) SMR CODE	(3) NSN	(4) CAGEC	(5) PART NUMBER	(6) DESCRIPTION AND USABLE ON CODES(UOC)	(7) QTY
					GROUP 1102 STEERING AND LEANING WHEEL MECHANISIM	
					FIG. 117D REAR FRAME RAIL REAR DIFFERENTIAL OIL COOLER LINES AND MOUNTING HARDWARE(SERIAL NUMBER 299999 AND BELOW)	
1	PAOZZ	4710015363017	19207	12469505	TUBE,ASSEMBLY,METAL.....	1
2	PAOZZ	4710014886236	19207	12469506	TUBE,ASSEMBLY,METAL.....	1
3	PAOZZ	5340007647051	96906	MS21333-69	CLAMP,LOOP.....	2
4	PAOZZ	5310012134192	7X677	9423534	WASHER,FLAT.....	4
5	PAOZZ	5305011159934	96906	MS51849-55	SCREW,MACHINE.....	2
6	PAOZZ	5340009018132	96906	MS21334-26	CLAMP,LOOP.....	2
7	PAOZZ	5310009416019	80205	MS21083N08	NUT,SELF-LOCKING,HE.....	2

END OF FIGURE

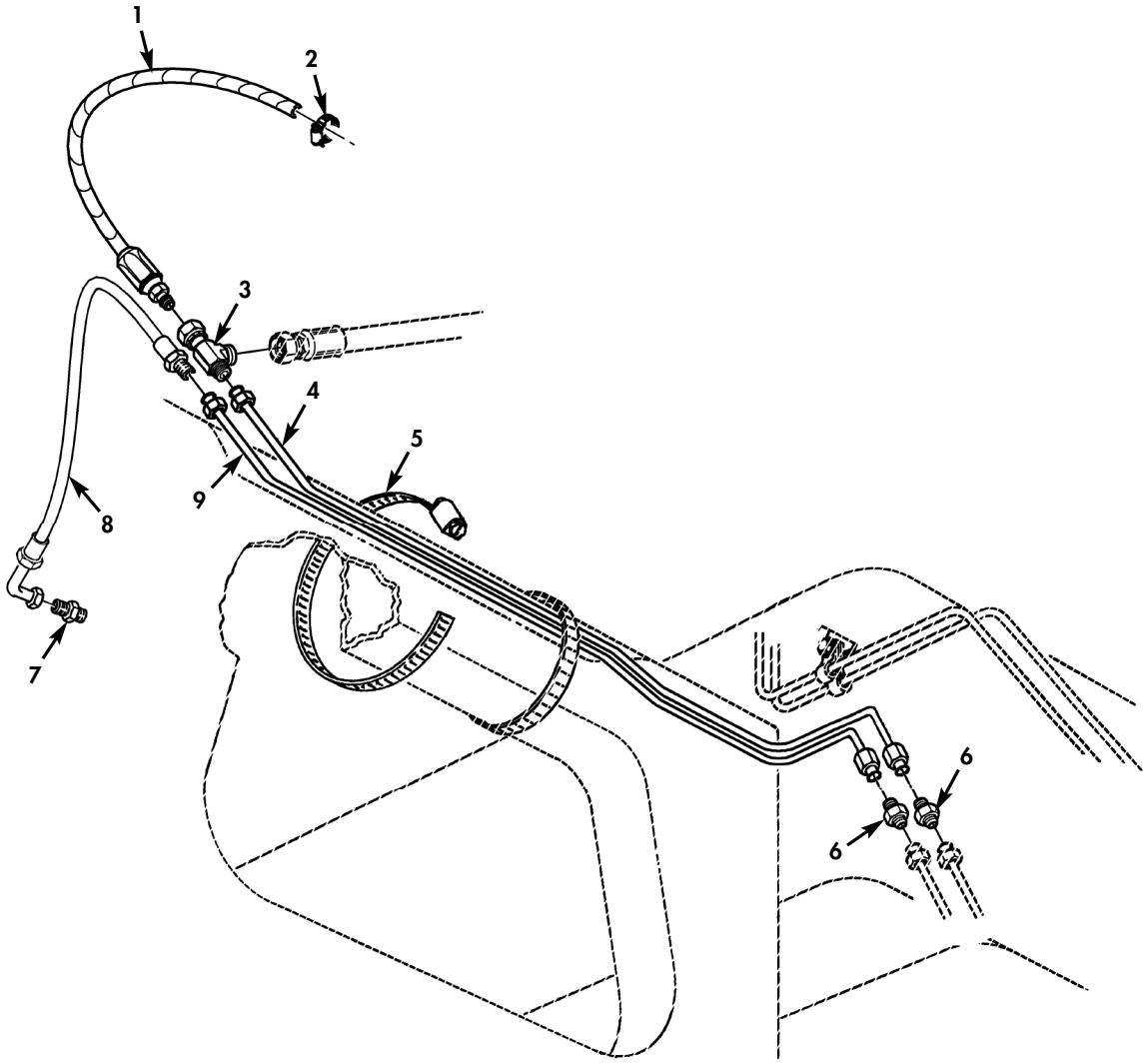

MWO 9-2320-387-20-1

Figure 117E. Front Crossmember Rear Differential Oil Cooler Lines, Hose, and Mounting Hardware (Serial Number 299999 and Below).

(1) ITEM NO	(2) SMR CODE	(3) NSN	(4) CAGEC	(5) PART NUMBER	(6) DESCRIPTION AND USABLE ON CODES(UOC)	(7) QTY
					GROUP 1102 STEERING AND LEANING WHEEL MECHANISIM	
					FIG. 117E FRONT CROSSMEMBER REAR DIFFERENTIAL OIL COOLER LINES,HOSE, AND MOUNTING HARDWARE (SERIAL NUMBER 299999 AND BELOW)	
1	PAOZZ	4720014886218	19207	12469224	HOSE ASSEMBLY,NONME.....	1
2	PAOZZ	4730000243971	19207	12339884-1	CLAMP,HOSE.....	1
3	PAOZZ	4730006185381	81343	6-6-6 070432CA	TEE,TUBE.....	1
4	PAOZZ	4710014886237	19207	12469507	TUBE,BENT METALLIC.....	1
5	PAOZZ	4730014619362	19207	11608950-14	CLAMP,HOSE.....	2
6	PAOZZ	4730005778017	96906	MS1501-A6	NIPPLE,TUBE.....	2
7	PAOZZ	4730014886433	81343	SAE J514	ADAPTER,STRAIGHT,TU.....	1
8	PAOZZ	4720014886220	19207	12469225	HOSE ASSEMBLY,NONME.....	1
9	PAOZZ	4710014886243	19207	12469508	TUBE,BENT METALLIC.....	1

END OF FIGURE

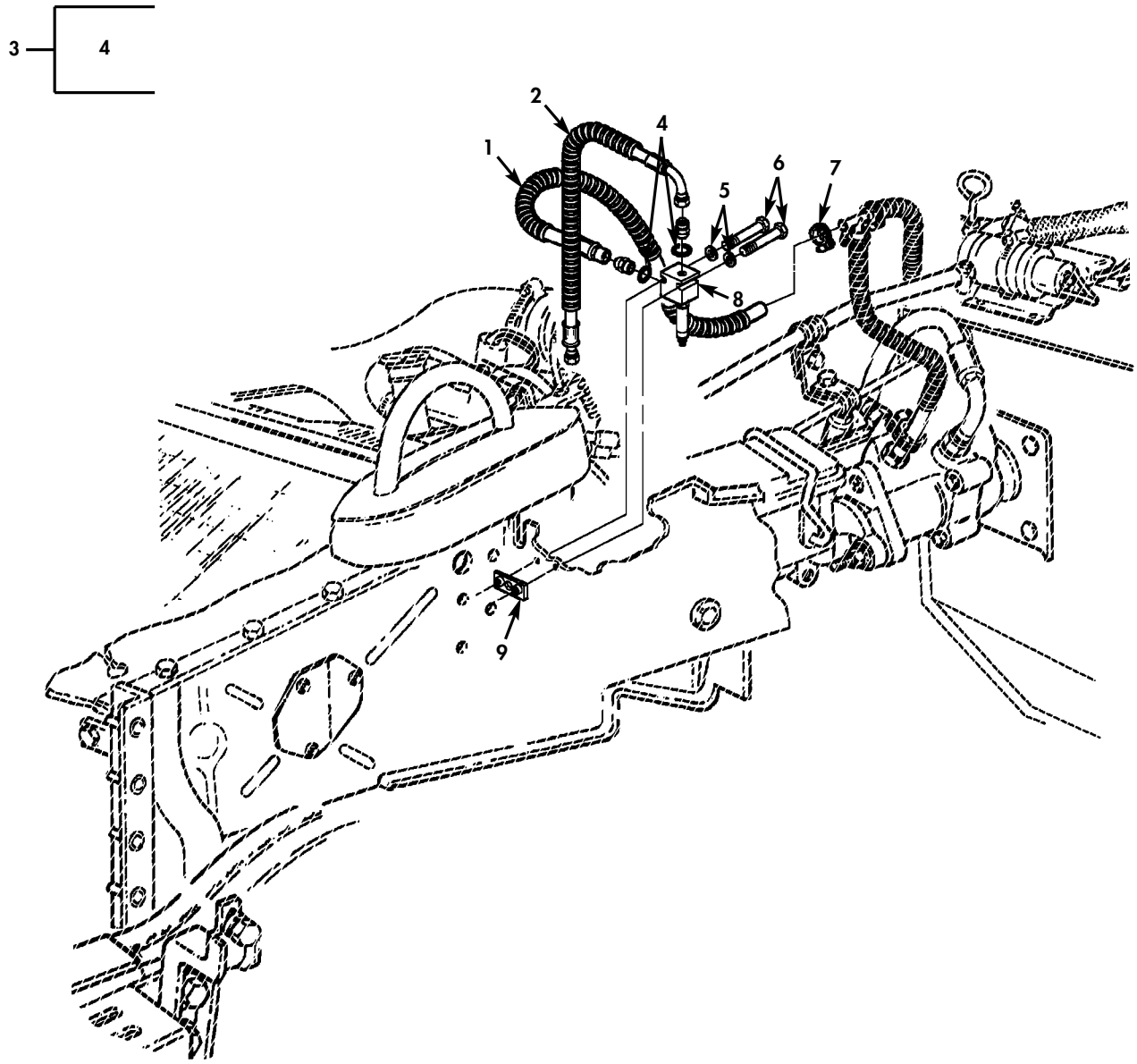

✱ **a** PART OF ITEM 3

Figure 117F. Front-Rear Differential Oil Cooler Hoses and Manifold Valve (Serial Number 299999 and Below).

(1) ITEM NO	(2) SMR CODE	(3) NSN	(4) CAGEC	(5) PART NUMBER	(6) DESCRIPTION AND USABLE ON CODES(UOC)	(7) QTY
					GROUP 1102 DIFFERENTAIAL	
					FIG. 117F FRONT-REAR DIFFERENTIAL OIL COOLER HOSES AND MANIFOLD VALVE (SERIAL NUMBER 299999 AND BELOW)	
* 1	PAOZZ	4720014886230	19207	12469499	HOSE ASSEMBLY,NONME..... UOC:TTT,UUU,XAA,XBB	1
* 2	PAOZZ	4720014886232	19207	12469500	HOSE ASSEMBLY,NONME..... UOC:TTT,UUU,XAA,XBB	1
* 3	PAOZZ	4730014919576	30780	6F5BXS	ADAPTER,STRAIGHT,TU..... UOC:TTT,UUU,XAA,XBB	2
* 4	PAOZZ	5331008052966	81343	MS28778-3	.O-RING..... UOC:TTT,UUU,XAA,XBB	2
* 5	PAOZZ	5310011023270	24617	2436161	WASHER,FLAT..... UOC:TTT,UUU,XAA,XBB	2
* 6	PAOZZ	5305000712511	80204	B1821BH025C200N	SCREW,CAP HEXAGON H..... UOC:TTT,UUU,XAA,XBB	2
* 7	PAOZZ	4730000243971	19207	12339884-1	CLAMP,HOSE..... UOC:TTT,UUU,XAA,XBB	1
* 8	PAOZZ	4810014886225	OBHP2	02591466	VALVE REGULATING,FL..... UOC:TTT,UUU,XAA,XBB	1
* 9	PAOZZ	5340011975477	19207	12339006	RETAINER ASSEMBLED..... UOC:TTT,UUU,XAA,XBB	1

END OF FIGURE

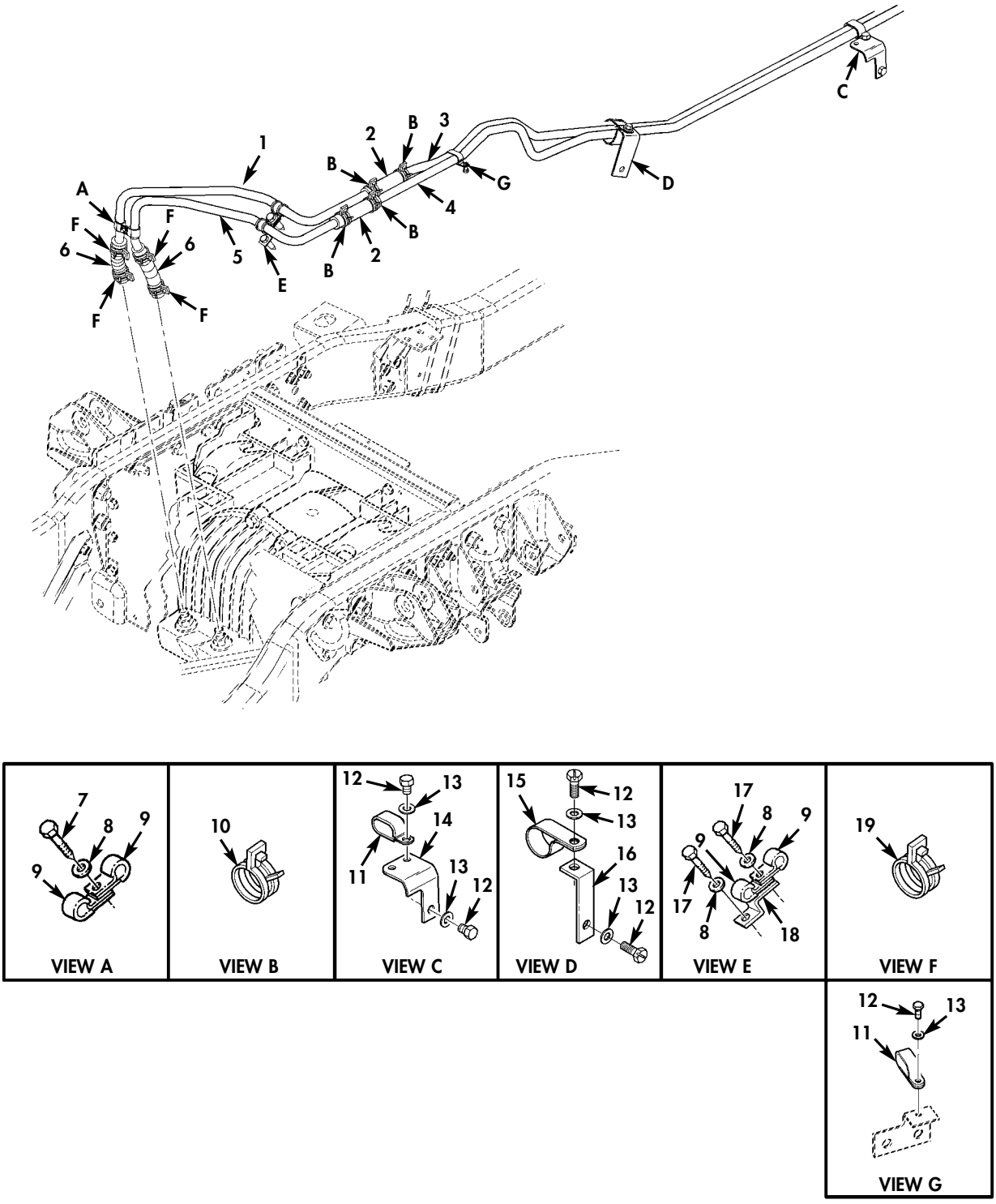

Figure 117G. Rear Differential Cooler Hoses and Related Parts (Serial Number 300000 and Above).

(1) ITEM NO	(2) SMR CODE	(3) NSN	(4) CAGEC	(5) PART NUMBER	(6) DESCRIPTION AND USABLE ON CODES(UOC)	(7) QTY
					GROUP 1102 DIFFERENTIAL	
					FIG. 117G REAR DIFFERENTIAL COOLER HOSES AND RELATED PARTS(SERIAL NUMBER 300000 AND ABOVE)	
* 1	PAOZZ	4710015658119	34623	6042830	TUBE,BENT METALLIC..... UOC:TTA,TTT,TT1,UUA,UUU,UU1,UU2	1
* 2	MOOZZ		34623	6033138-4.5IN	HOSE,NONMETALLIC MAKE FROM HOSE P/N MS521301A203R,4.5 INCHES LONG..... UOC:TTA,TTT,TT1,UUA,UUU,UU1,UU2	2
* 3	PAOZZ	4710015657598	34623	6039248	TUBE,BENT METALLIC..... UOC:TTA,TTT,TT1,UUA,UUU,UU1,UU2	1
* 4	PAOZZ	4710015657219	34623	6039247	TUBE,BENT METALLIC..... UOC:TTA,TTT,TT1,UUA,UUU,UU1,UU2	1
* 5	PAOZZ	4710015657666	34623	6042831	TUBE,BENT METALLIC..... UOC:TTA,TTT,TT1,UUA,UUU,UU1,UU2	1
* 6	MOOZZ		34623	6042796-7.5IN	HOSE,NONMETALLIC MAKE FROM HOSE P/N MS521301A203R,7.5 INCHES LONG..... UOC:TTA,TTT,TT1,UUA,UUU,UU1,UU2	1
* 7	PAOZZ	5305011985510	7X677	9420352	SCREW,TAPPING 1/4-14 X 5/8..... UOC:TTA,TTT,TT1,UUA,UUU,UU1,UU2	1
* 8	PAOZZ	5310011023270	24617	2436161	WASHER,FLAT 1/4..... UOC:TTA,TTT,TT1,UUA,UUU,UU1,UU2	3
* 9	PAOZZ	5340000881254	80205	MS21333-104	CLAMP,LOOP..... UOC:TTA,TTT,TT1,UUA,UUU,UU1,UU2	4
* 10	PAOZZ	4730015646847	34623	6017845	CLAMP,LOOP..... UOC:TTA,TTT,TT1,UUA,UUU,UU1,UU2	4
* 11	PAOZZ	5340007022848	80208	MS21333-128	CLAMP,LOOP..... UOC:TTA,TTT,TT1,UUA,UUU,UU1,UU2	2
* 12	PAOZZ	5305013936311	24617	271153	SCREW,TAPPING 3/8-16 X 5/8..... UOC:TTA,TTT,TT1,UUA,UUU,UU1,UU2	5
* 13	PAOZZ	5310014124013	24617	2436163	WASHER,FLAT 3/8..... UOC:TTA,TTT,TT1,UUA,UUU,UU1,UU2	5
* 14	PFOZZ	2590015657336	34623	6043340	BRACKET,VEHICULAR C..... UOC:TTA,TTT,TT1,UUA,UUU,UU1,UU2	1
* 15	PAOZZ	5340007385182	19207	7385182	CLAMP,LOOP..... UOC:TTA,TTT,TT1,UUA,UUU,UU1,UU2	1
* 16	PAOZZ	5340011922256	19207	12338663	BRACKET,ANGLE..... UOC:TTA,TTT,TT1,UUA,UUU,UU1,UU2	1
* 17	PAOZZ	5305001913640	96906	MS51851-85	SCREW,TAPPING 1/4-20 X 5/8..... UOC:TTA,TTT,TT1,UUA,UUU,UU1,UU2	2
* 18	PFOZZ	2590015657332	34623	6042857	BRACKET,VEHICULAR C..... UOC:TTA,TTT,TT1,UUA,UUU,UU1,UU2	1
* 19	PAOZZ	5340014732692	34623	6008528	CLAMP,LOOP..... UOC:TTA,TTT,TT1,UUA,UUU,UU1,UU2	4

END OF FIGURE

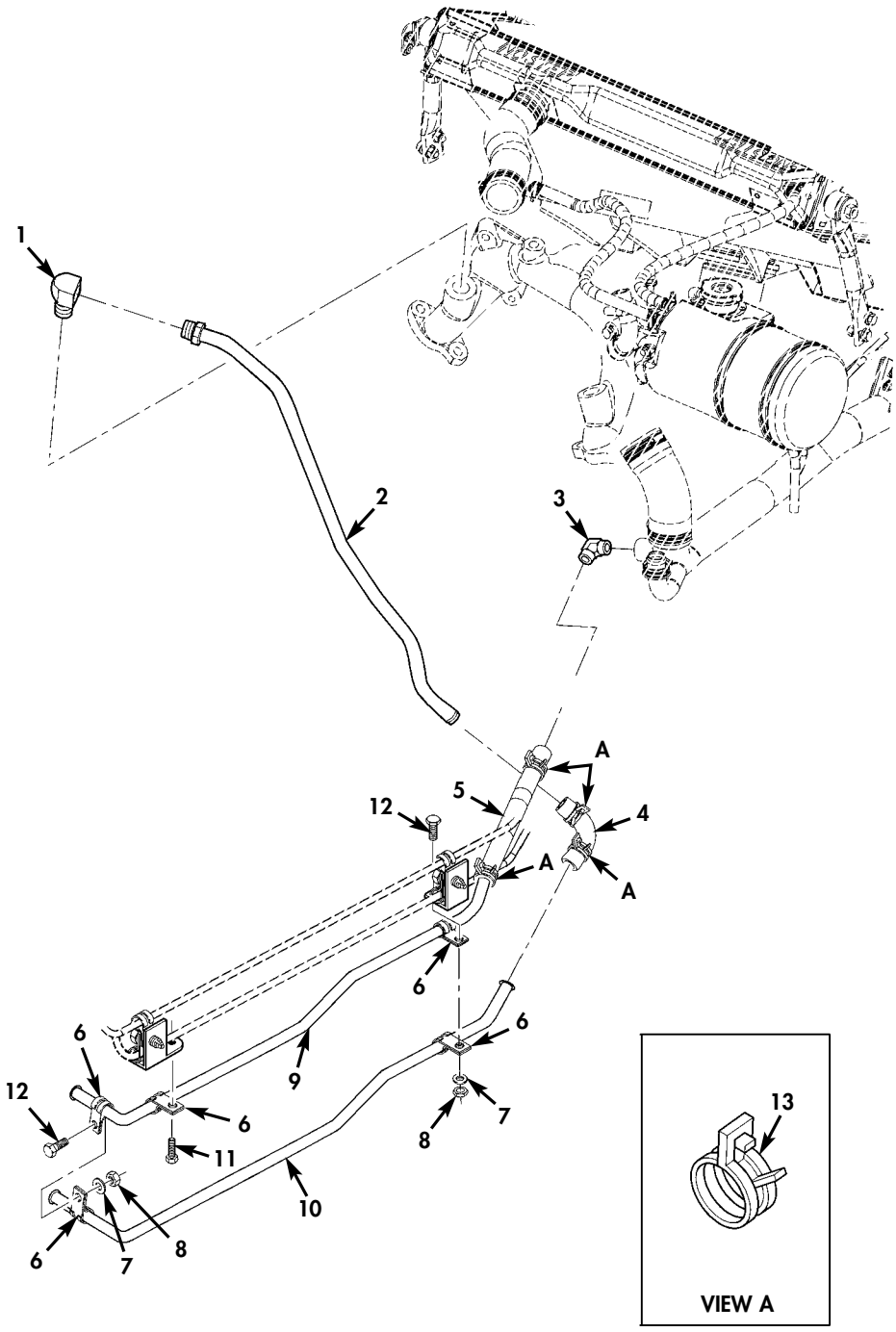

Figure 117H. Front-Rear Differential Cooler Hoses and Related Parts (Serial Number 300000 and Above).

(1) ITEM NO	(2) SMR CODE	(3) NSN	(4) CAGEC	(5) PART NUMBER	(6) DESCRIPTION AND USABLE ON CODES(UOC)	(7) QTY
					GROUP 1102 DIFFERENTIAL	
					FIG. 117H FRONT-REAR DIFFERENTIAL COOLER HOSES AND RELATED PARTS (SERIAL NUMBER 300000 AND ABOVE)	
* 1	PAOZZ	4730015658363	93061	2491FHD-10-8	ELBOW,PIPE TO TUBE..... UOC:TTA,TTT,TT1,UUA,UUU,UU1,UU2	1
* 2	PAOZZ	4710015657642	34623	6043257	TUBE,BENT METALLIC..... UOC:TTA,TTT,TT1,UUA,UUU,UU1,UU2	1
* 3	PAOZZ	4730013994206	81343	10-8 430260C	ELBOW,PIPE..... UOC:TTA,TTT,TT1,UUA,UUU,UU1,UU2	1
* 4	MOOZZ		34623	6043356-9IN	HOSE,NONMETALLIC MAKE FROM HOSE P/N MS521301A203R,9 INCHES LONG..... UOC:TTA,TTT,TT1,UUA,UUU,UU1,UU2	1
* 5	MOOZZ		34623	6033141-12.5IN	HOSE,NONMETALLIC MAKE FROM HOSE P/N MS521301A203R,12.5 INCHES LONG..... UOC:TTA,TTT,TT1,UUA,UUU,UU1,UU2	1
* 6	PAOZZ	5340000881254	80205	MS21333-104	CLAMP,LOOP..... UOC:TTA,TTT,TT1,UUA,UUU,UU1,UU2	5
* 7	PAOZZ	5310011023270	24617	2436161	WASHER,FLAT 1/4..... UOC:TTA,TTT,TT1,UUA,UUU,UU1,UU2	2
* 8	PAOZZ	5310009050762	96906	MS51967-3	NUT,PLAIN,HEXAGON 1/4-20..... UOC:TTA,TTT,TT1,UUA,UUU,UU1,UU2	2
* 9	PAOZZ	4710015657234	34623	6033083	TUBE,BENT METALLIC..... UOC:TTA,TTT,TT1,UUA,UUU,UU1,UU2	1
* 10	PAOZZ	4710015657659	34623	6043342	TUBE,BENT METALLIC..... UOC:TTA,TTT,TT1,UUA,UUU,UU1,UU2	1
* 11	PAOZZ	5305013936311	24617	271153	SCREW,TAPPING 3/8-16 X 5/8..... UOC:TTA,TTT,TT1,UUA,UUU,UU1,UU2	1
* 12	PAOZZ	5305000680508	80204	B1821BH025C075N	SCREW,CAP,HEXAGON H 1/4-20 X 3/4... UOC:TTA,TTT,TT1,UUA,UUU,UU1,UU2	2
* 13	PAOZZ	4730015646847	34623	6017845	CLAMP,HOSE..... UOC:TTA,TTT,TT1,UUA,UUU,UU1,UU2	4

END OF FIGURE

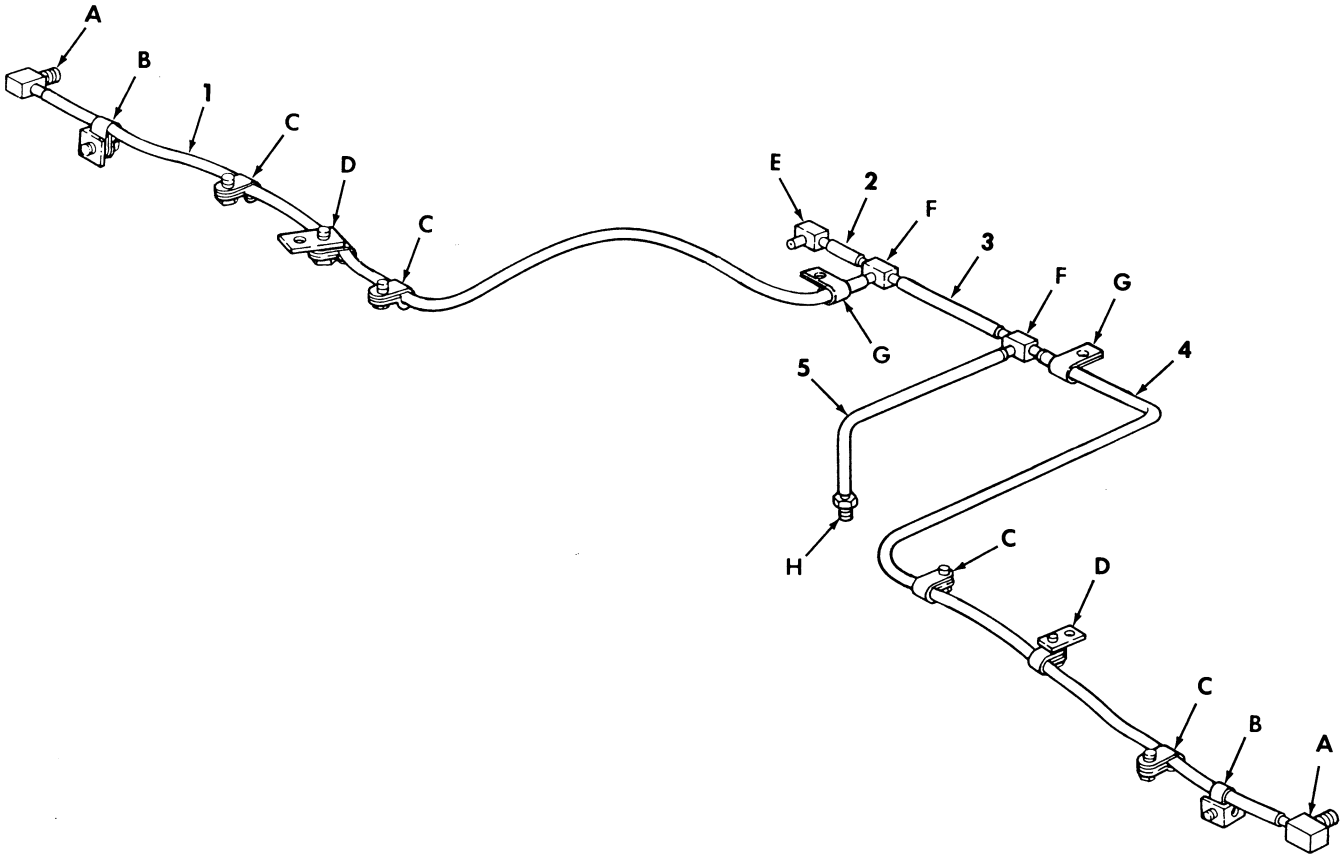

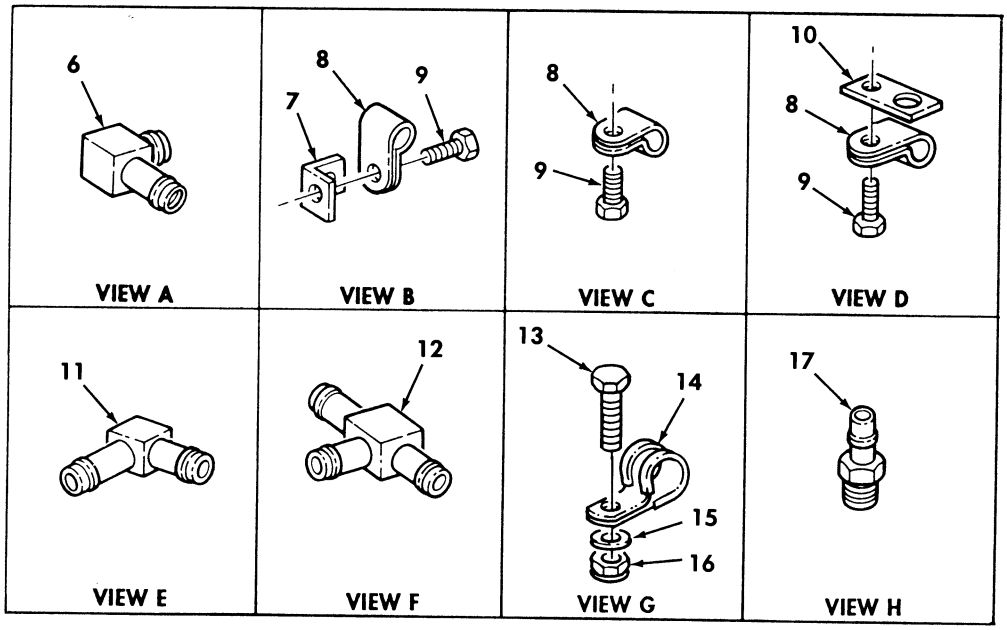

Figure 118. Rear Axle Differential and Geared Hub Vent Lines.

(1) ITEM NO	(2) SMR CODE	(3) NSN	(4) CAGEC	(5) PART NUMBER	(6) DESCRIPTION AND USABLE ON CODES(UOC)	(7) QTY
					GROUP 1102 DIFFERENTIAL	
					FIG. 118 REAR AXLE DIFFERENTIAL AND GEARED HUB VENT LINES	
* 1	MOOZZ		34623	5591158	TUBE R.H.,MAKE FROM TUBE,P/N CPR104420-1,40 INCHES LONG.....	1
2	MOOZZ		34623	5597262	TUBE MAKE FROM TUBE,P/N CPR104420-1,5 INCHES LONG.....	1
3	MOOZZ		34623	5591483	TUBE MAKE FROM TUBE,P/N CPR104420-1,7 INCHES LONG.....	1
* 4	MOOZZ		34623	5591157	TUBE REAR,LH,MAKE FROM TUBE,P/N CPR104420-1,47 INCHES LONG.....	1
* 5	MOOZZ		34623	5591161	TUBE MAKE FROM TUBE,P/N CPR104420-1,13 INCHES LONG.....	1
6	PAOZZ	4730010707680	34623	5582653	ELBOW,PIPE TO HOSE.....	2
7	PFOZZ	5340013003715	34623	5598208	BRACKET,ANGLE.....	2
8	PAOZZ	5340000509077	96906	MS21333-119	CLAMP,LOOP.....	8
9	PAOZZ	5305000518605	80205	MS16995-77	SCREW,CAP,SOCKET HE 3/8-16 X 1/2...	8
10	PFOZZ	5340012097767	19207	12338172	PLATE,MENDING.....	2
11	PAOZZ	4730010580900	79470	1065X4	ELBOW,HOSE.....	1
12	PAOZZ	4730010035105	79470	1064X4	TEE,HOSE.....	2
13	PAOZZ	5305002253843	80204	B1821BH025C100N	SCREW,CAP,HEXAGON H 1/4-20 X 1.00..	2
14	PAOZZ	5340008091490	96906	MS21333-98	CLAMP,LOOP.....	2
15	PAOZZ	5310008094058	96906	MS27183-10	WASHER,FLAT 1/4.....	2
16	PAOZZ	5310000614650	96906	MS51943-31	NUT,SELF-LOCKING,HE 1/4-20.....	2
17	PAOZZ	4730011855348	01989	1068X4	ADAPTER,STRAIGHT,PI.....	1

END OF FIGURE

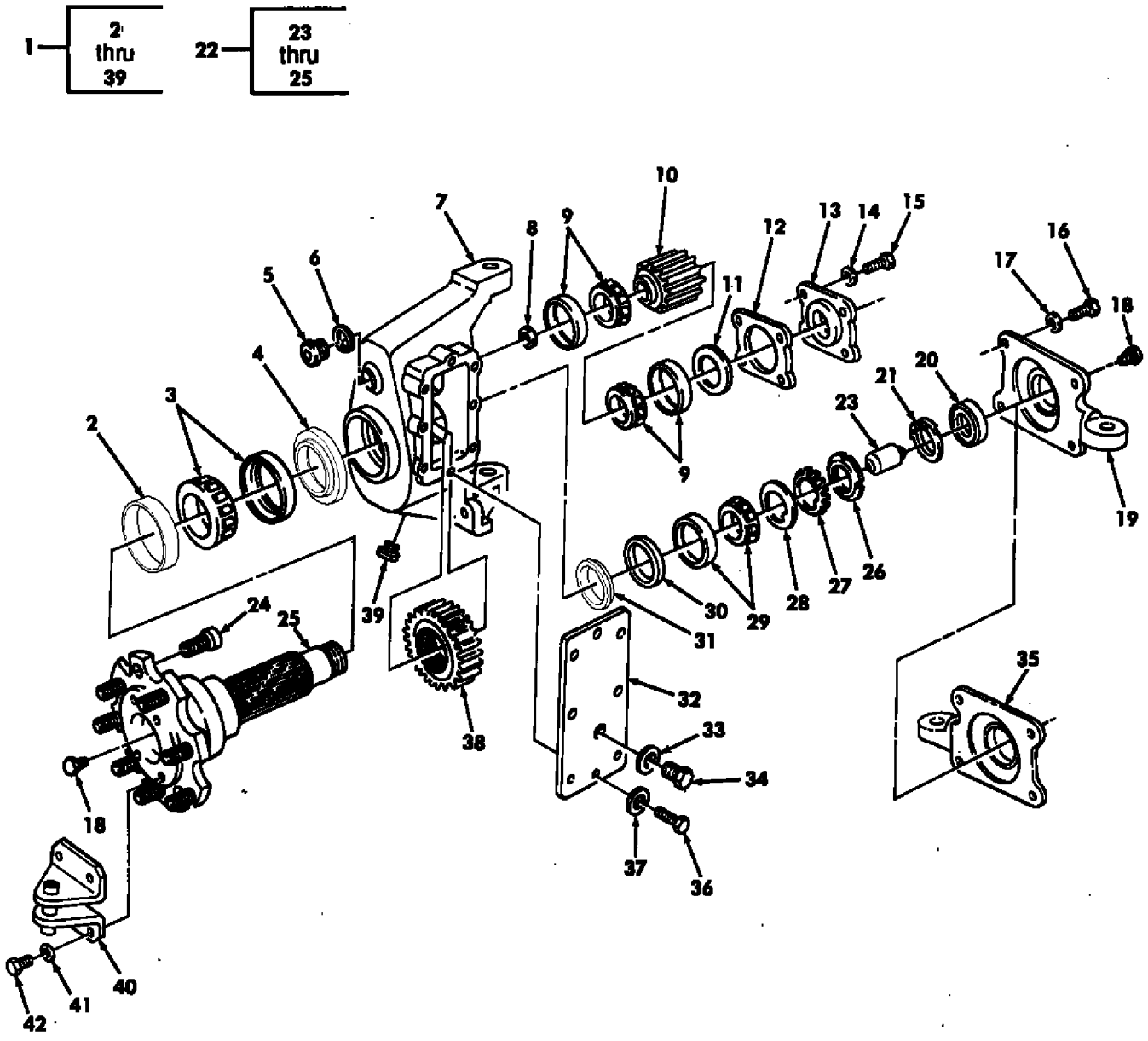

Figure 119. Rear Knuckle and Geared Hub Assembly (Geared Hub P/N 6009352) (Serial Number 299999 and Below).

(1) ITEM NO	(2) SMR CODE	(3) NSN	(4) CAGEC	(5) PART NUMBER	(6) DESCRIPTION AND USABLE ON CODES(UOC)	(7) QTY
					GROUP 1104 STEERING,SIDESHIFT AND WHEEL LEANING MECHANISM	
					FIG. 119 REAR KNUCKLE AND GEARED HUB ASSEMBLY(GEARED HUB P/N 6009352) (SERIAL NUMBER 299999 AND BELOW)	
1	PAOFF	2530014133653	34623	6009352	HUB BODY ASSEMBLY,FOUR WHEEL DRIVE..	2
2	PAOZZ	5330012036551	63769	CR 535094-60	.SEAL,PLAIN ENCASED.....	1
3	PAFZZ	3110001005937	34623	5568228	.BEARING,ROLLER,TAPE.....	1
4	PAFZZ	5365011748186	34623	5573989	.SPACER,RING OUTER.....	1
5	PAOZZ	5365002777341	24617	453006	.PLUG,MACHINE THREAD UPPER.....	1
6	PAOZZ	5310012310596	34623	5573688	.WASHER,LOCK UPPER.....	1
7	XAFFF		34623	5593993	.KNUCKLE AND GEAR.....	1
8	PAFZZ	5310014733373	34623	RCSK17047	.WASHER,FLAT.....	1
9	PAFZZ	3110010274475	34623	5568226	.BEARING,ROLLER,TAPE UPPER.....	2
10	PAFZZ	3020014322553	34623	6009453	.GEAR,SPUR UPPER.....	1
11	PAOZZ	5330011809099	80201	535106-60	.SEAL,PLAIN ENCASED.....	1
12	PAOZZ	5330011760825	34623	5573692	.GASKET 0.005.....	V
13	PAOZZ	5340011748493	34623	5574002	.RETAINER UPPER.....	1
14	PAOZZ	5310000806004	96906	MS27183-14	.WASHER,FLAT UPPER,3/8.....	4
15	PAOZZ	5305000680510	80204	B1821BH038C100N	.SCREW,CAP,HEXAGON H 3/8-16 X 1.00 UPPER.....	4
16	PAOZZ	5305000712067	80204	B1821BH050C125N	.SCREW,CAP,HEXAGON H 1/2-13 X 1.25.	4
17	PAOZZ	5310008095998	96906	MS27183-18	.WASHER,FLAT 1/2.....	4
18	PAOZZ	4730000127951	93334	127951	.PLUG,PIPE.....	2
19	PAOZZ	2530014338003	34623	6005120	.COVER,STEERING ARM L.H.....	1
20	PAFZZ	5330014568823	34623	6005193	.SEAL,PLAIN ENCASED.....	1
21	PAOZZ	5325005141299	79136	5008-125MD	.RING,RETAINING.....	1
22	PAOZZ	2530014492495	34623	5715160	.SPINDLE,WHEEL,DRIV.....	1
23	PAFZZ	5365014142902	34623	5594531-B	..SPACER,SLEEVE.....	1
24	PAOZZ	5307011964937	34623	5568211	..STUD,SELF-LOCKING 9/16-18 X 1.50.	8
25	XAFZZ		34623	6009349	..SPINDLE,WHEEL.....	1
26	PAOZZ	5310013825031	19207	12342680	.NUT,PLAIN,ROUND 1-3/8.....	1
27	PAOZZ	5310012134185	34623	5584462	.WASHER,KEY 1-3/8.....	1
28	PAOZZ	5310011748607	34623	5573684	.WASHER,KEY 1-3/8.....	1
29	PAFZZ	3110001005920	34623	5568227	.BEARING,ROLLER,TAPE TAPE INNER....	1
30	PAFZZ	5365014562032	34623	6001784	.SPACER,RING.....	1
31	PAFZZ	5365014142895	34623	06009350	.SPACER,SLEEVE.....	1
32	PAFZZ	5340011742271	34623	5574924	.COVER,ACCESS.....	1
33	PAOZZ	5310011760839	34623	5573687	.WASHER,FLAT.....	1
34	PAOZZ	5365011775720	34623	5573690	.PLUG,MACHINE THREAD.....	1
35	PAOZZ	2530014338702	34623	6005121	.COVER,STEERING ARM R.H.....	1
36	PAFZZ	5306002264823	80204	B1821BH031C056N	.BOLT,MACHINE 5/16-18 X .531.....	8
37	PAFZZ	5310000814219	96906	MS27183-12	.WASHER,FLAT 5/16.....	8
38	PAFZZ	3020014762701	34623	6009452	.GEAR,SPUR LOWER.....	1
39	PAOZZ	4730000459769	96906	MS49006-6	.PLUG,PIPE,MAGNETIC.....	1
40	PAOZZ	5340011634773	19207	12338324	BRACKET,MOUNTING.....	2
41	PAOZZ	5310002090965	96906	MS35338-47	WASHER,LOCK 7/16.....	8
42	PAOZZ	5305000711786	80204	B1821BH044C100N	SCREW,CAP,HEXAGON H 7/16-14 X 1.00.	8

END OF FIGURE

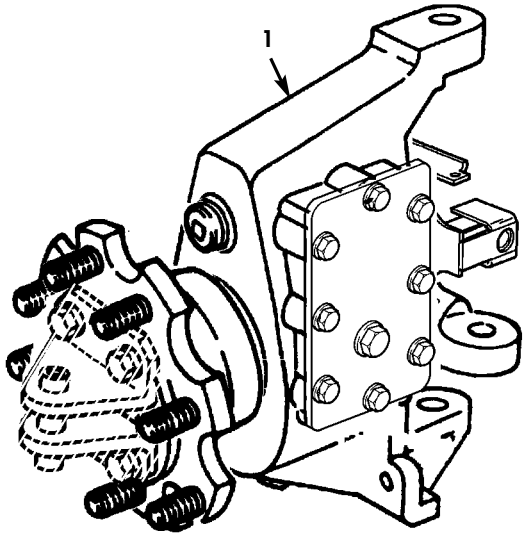

Figure 119A. Rear Knuckle and Geared Hub Assembly (Serial Number 300000 and Above).

(1) ITEM NO	(2) SMR CODE	(3) NSN	(4) CAGEC	(5) PART NUMBER	(6) DESCRIPTION AND USABLE ON CODES(UOC)	(7) QTY
					GROUP 1104 STEERING,SIDESHAFT AND WHEEL LEANING MECHANISM	
					FIG. 119A REAR KNUCKLE AND GEARED HUB ASSEMBLY(SERIAL NUMBER 300000 AND ABOVE)	
* 1	PAOFF	2530015628935	34623	6041986	HUB BODY ASSEMBLY,F..... UOC:TTA,TTT,TT1,UUA,UUU,UU1,UU2	2

END OF FIGURE

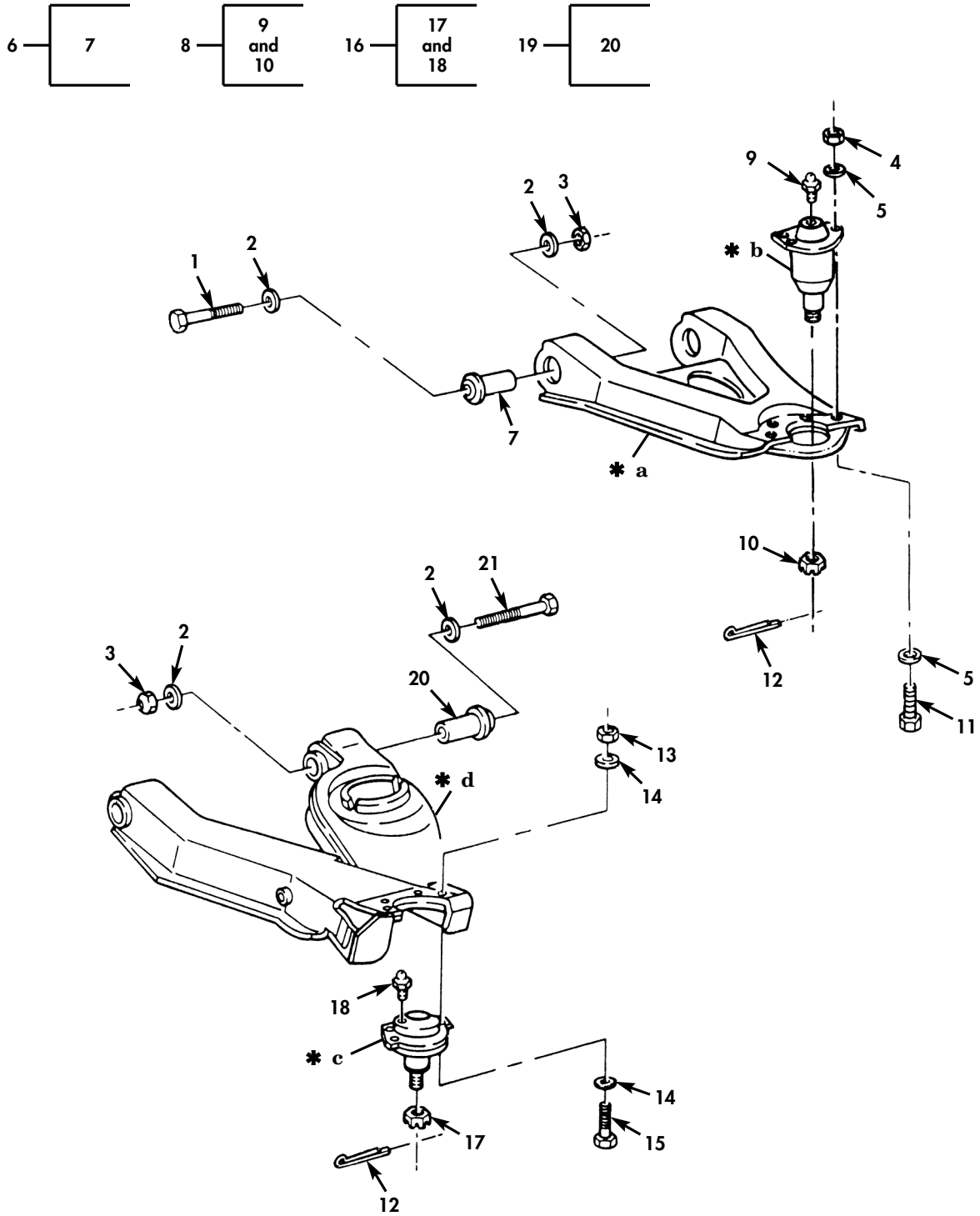

✱ **a** PART OF ITEM 6
✱ **b** PART OF ITEM 8
✱ **c** PART OF ITEM 16
✱ **d** PART OF ITEM 19

Figure 120. Rear Control Arms, Ball Joints, and Mounting Hardware.

(1) ITEM NO	(2) SMR CODE	(3) NSN	(4) CAGEC	(5) PART NUMBER	(6) DESCRIPTION AND USABLE ON CODES(UOC)	(7) QTY
					GROUP 1104 STEERING, SIDESHIFT AND WHEEL LEANING MECHANISM	
					FIG. 120 REAR CONTROL ARMS, BALL JOINTS, AND MOUNTING HARDWARE	
* 1	PAOZZ	5305009474363	80204	B1821BH075C550N	SCREW,CAP,HEXAGON H 3/4-10 X 5.50... SERIAL NUMBER 259025 AND ABOVE..... UOC:TTA,TTT,TT1,UUA,UUU,UU1,UU2	6
* 1	PAOZZ	5305009474361	80204	B1821BH075C475N	SCREW,CAP,HEXAGON H 3/4-10 X 4.75... SERIAL NUMBER 259024 AND BELOW..... UOC:XAA,XBB	6
* 2	PAOZZ	5310011474052	7X677	11609642	WASHER,FLAT 3/4.....	16
* 3	PAOZZ	5310004093333	81349	M45913/3-12CG8C	NUT,SELF-LOCKING,HE 3/4-10.....	8
* 4	PAOZZ	5310008140672	96906	M45913/3-6FG8C	NUT,SELF-LOCKING,HE 3/8-24.....	8
* 5	PAOZZ	5310014124013	24617	2436163	WASHER,FLAT 3/8.....	16
* 6	PAOFF	2530015548309	34623	6030617	ARM,CONTROL,VEHICUL UPPER,L.H.SERIAL NUMBER 259025 AND ABOVE..... UOC:TTA,TTT,TT1,UUA,UUU,UU1,UU2	1
* 6	PAOFF	2530015548315	34623	6030618	ARM,CONTROL,VEHICUL UPPER,R.H.SERIAL NUMBER 259025 AND ABOVE..... UOC:TTA,TTT,TT1,UUA,UUU,UU1,UU2	1
* 6	PAOFF	2530014207893	34623	RCSK-17089-2	ARE,CONTROL,VEHICUL UPPER,R.H.SERIAL NUMBER 259024 AND BELOW..... UOC:XAA,XBB	1
* 6	PAOFF	2530014207892	19207	12460352	ARM,CONTROL,VEHICUL UPPER,L.H.SERIAL NUMBER 259024 AND BELOW..... UOC:XAA,XBB	1
* 7	PAFZZ	5365015663907	76445	869370	.BUSHING,SLEEVE.SERIAL NUMBER 259025 AND ABOVE..... UOC:TTA,TTT,TT1,UUA,UUU,UU1,UU2	2
* 7	PAFZZ	3120011865527	19207	12338270	.BUSHING,SLEEVE.SERIAL NUMBER 259024 AND BELOW..... UOC:XAA,XBB	2
* 8	PAOZZ	2530015548288	34623	6026749	PARTS KIT,BALL JOIN UPPER,REAR SERIAL NUMBER 259025 AND ABOVE..... UOC:TTA,TTT,TT1,UUA,UUU,UU1,UU2	2
* 8	PAOZZ	2530014131366	63477	SE1589	PARTS KIT,BALL JOHN UPPER,REAR SERIAL NUMBER 259024 AND BELOW..... UOC:XAA,XBB	2
* 9	PAOZZ	4730000504203	81343	AS15001-1	.FITTING,LUBRICATION.....	1
* 10	PAOZZ	5310008507004	96906	MS35692-54	.NUT,PLAIN,SLOTTED,H 5/8-18.....	1
* 11	PAOZZ	5305014125994	19207	12460159	SCREW,CAP,HEXAGON H 3/8-24 X 5/8....	8
* 12	PAOZZ	5315000120123	80205	MS24665-355	PIN,COTTER 1/8 X 1.25.....	4
* 13	PFOZZ	5310011504003	24617	9422299	NUT,SELF-LOCKING,HE 7/16-14.....	8
* 14	PAOZZ	5310008094061	96906	MS27183-15	WASHER,FLAT 7/16.....	16
* 15	PAOZZ	5305000712055	80204	B1821BH044C150N	SCREW,CAP,HEXAGON H 7/16-14 X 1.50..	8
* 16	PAOZZ	2530015548307	34623	6030616	PARTS KIT, BALL JOIN LOWER.SERIAL NUMBER 259025 AND ABOVE..... UOC:TTA,TTT,TT1,UUA,UUU,UU1,UU2	2

(1) ITEM NO	(2) SMR CODE	(3) NSN	(4) CAGEC	(5) PART NUMBER	(6) DESCRIPTION AND USABLE ON CODES(UOC)	(7) QTY
* 16	PAOZZ	3040014229390	63477	SE1590	PART KIT, BALL JOIN LOWER.SERIAL NUMBER 259024 AND BELOW..... UOC:XAA,XBB	2
* 17	PAOZZ	5310008507004	96906	MS35692-54	.NUT,PLAIN,SLOTTED,H 5/8-18.....	1
* 18	PAOZZ	4730000504203	81343	AS15001-1	.FITTING,LUBRICATION.....	1
* 19	PAOFF	2530015548336	34623	6030627	ARM,CONTROL,VEHICUL LOWER R.H SERIAL NUMBER 259025 AND ABOVE..... UOC:TTA,TTT,TT1,UUA,UUU,UU1,UU2	1
* 19	PAOFF	2530015548270	34623	6030629	ARM,CONTROL,VEHICUL LOWER L.H.SERIAL NUMBER 259025 AND ABOVE..... UOC:TTA,TTT,TT1,UUA,UUU,UU1,UU2	1
* 19	PAOFF	2530014208634	34623	6016750	ARM,CONTROL,VEHICUL LOWER R.H.SERIAL NUMBER 259024 AND BELOW..... UOC:XAA,XBB	1
* 19	PAOFF	2530014207895	34623	6016751	ARM,CONTOL,VEHICUL LOWER L.H. SERIAL NUMBER 259024 AND BELOW..... UOC:XAA,XBB	1
* 20	PAFZZ	5365015663907	76445	869370	.BUSHING,SLEEVE.SERIAL NUMBER 259025 AND ABOVE..... UOC:TTA,TTT,TT1,UUA,UUU,UU1,UU2	2
* 20	PAFZZ	3120011865527	19207	12338270	.BUSHING,SLEEVE.SERIAL NUMBER 259024 AND BELOW..... UOC:XAA,XBB	2
* 21	PAOZZ	5305009474361	80204	B1821BH075C475N	SCREW,CAP,HEXAGON H 3/4-10 X 4.75...	2

END OF FIGURE

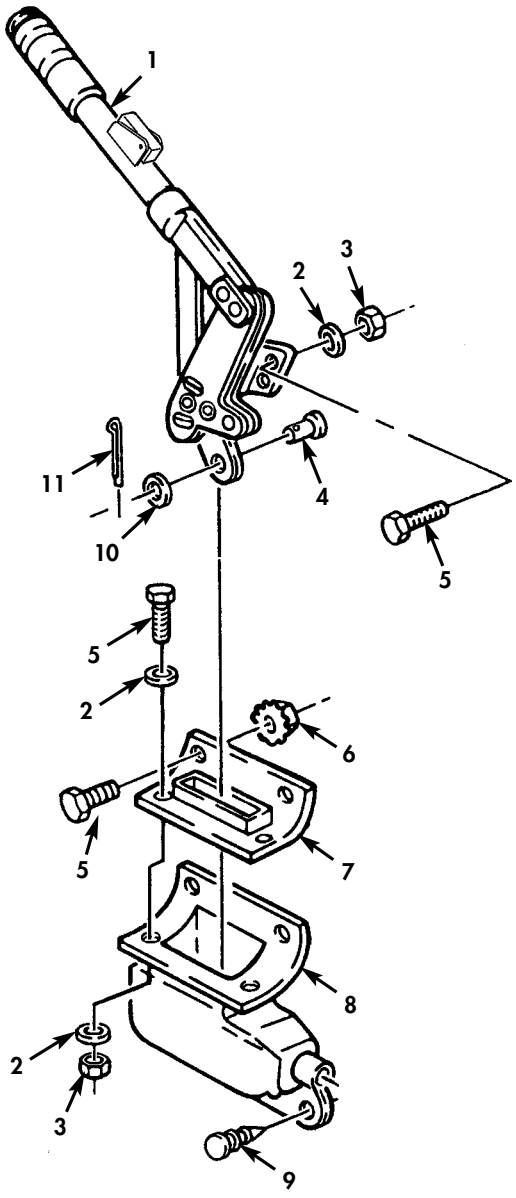

Figure 121. Parking Brake Hand Lever (Serial Number 299999 and Below).

(1) ITEM NO	(2) SMR CODE	(3) NSN	(4) CAGEC	(5) PART NUMBER	(6) DESCRIPTION AND USABLE ON CODES(UOC)	(7) QTY
					GROUP 12 BRAKES	
					1201 HAND BRAKES	
					FIG. 121 PARKING BRAKE HAND LEVER (SERIAL NUMBER 299999 AND BELOW)	
1	PAOZZ	5340013804561	19207	12342679	LEVER,LOCK-RELEASE.....	1
2	PAOZZ	5310011023270	24617	2436161	WASHER,FLAT 1/4.....	6
3	PAOZZ	5310000614650	96906	MS51943-31	NUT,SELF-LOCKING,HE 1/4-20.....	4
4	PAOZZ	5315008158840	96906	MS35810-4	PIN,STRAIGHT,HEADED 3/8 X 1-1/16...	1
5	PAOZZ	5305002253843	80204	B1821BH025C100N	SCREW,CAP,HEXAGON H 1/4-20 X 1.00..	6
6	PAOZZ	5310012522999	34623	5593033	NUT,SELF-LOCKING,AS 1/4-20.....	1
7	PAOZZ	2530011883520	19207	12338295	BOOT,VEHICULAR COMP UPPER.....	1
8	PAOZZ	2530011888446	19207	12338291	BOOT,VEHICULAR COMP LOWER.....	1
9	PAOZZ	5325011973460	02768	354-280308-00-00 78	FASTENER,SPRING TEN LOWER.....	1
10	PAOZZ	5310000877493	96906	MS27183-13	WASHER,FLAT 3/8.....	1
11	PAOZZ	5315008423044	14351	X601	PIN,COTTER 3/32 X 3/4.....	1

END OF FIGURE

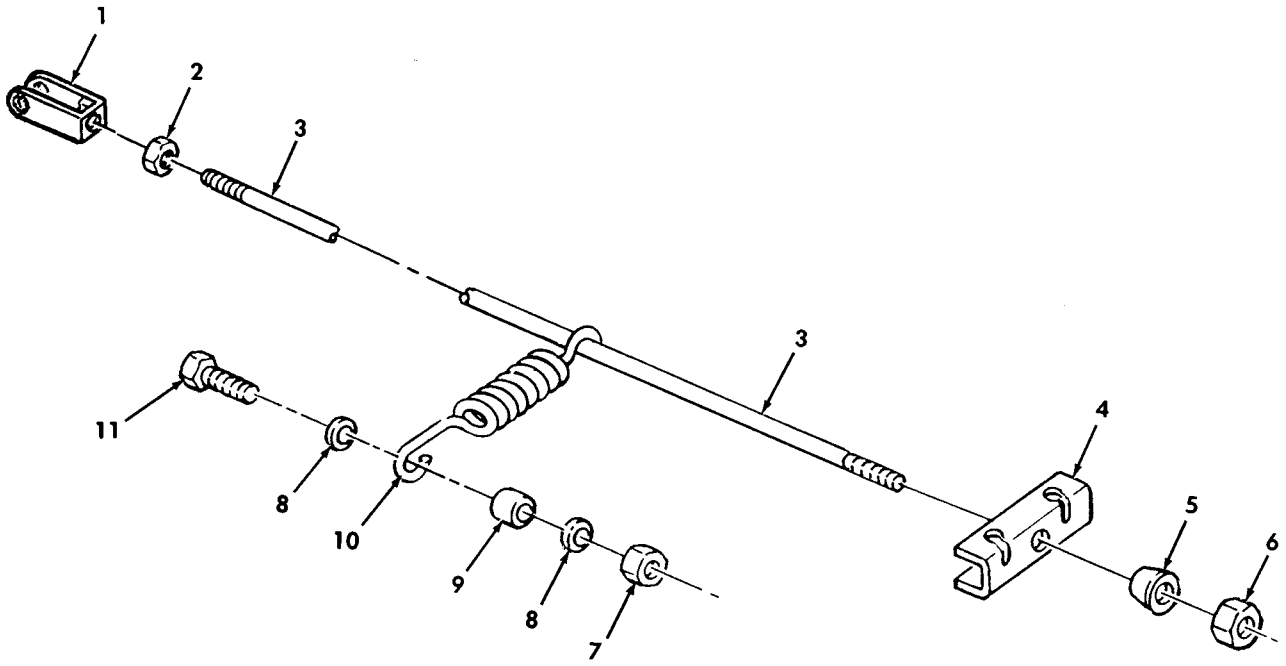

Figure 122. Parking Brake Rod (Serial Number 299999 and Below).

(1) ITEM NO	(2) SMR CODE	(3) NSN	(4) CAGEC	(5) PART NUMBER	(6) DESCRIPTION AND USABLE ON CODES(UOC)	(7) QTY
					GROUP 1201 HAND BRAKES	
					FIG. 122 PARKING BRAKE ROD (SERIAL NUMBER 299999 AND BELOW)	
1	PAOZZ	5340012135600	92867	95001418	CLEVIS,ROD END FRONT.....	1
2	PAOZZ	5310011027356	24617	9421077	NUT,PLAIN,HEXAGON 5/16-24.....	1
3	PFOZZ	5306012736333	34623	5596803	ROD,THREADED END.....	1
4	PFOZZ	2530012914597	34623	5597334	BAR,BRAKE CABLE.....	1
5	PAOZZ	5310012895455	34623	5596804	WASHER,CONVEX 5/16.....	1
6	PAOZZ	5310002416658	96906	MS51943-34	NUT,SELF-LOCKING,HE 5/16-24.....	1
7	PAOZZ	5310008140673	96906	MS51943-33	NUT,SELF-LOCKING,HE 5/16-18.....	1
8	PAOZZ	5310000814219	96906	MS27183-12	WASHER,FLAT 5/16.....	2
9	PAOZZ	5365012550965	34623	5596306	SPACER,SLEEVE.....	1
10	PAOZZ	5360012600700	34623	5593978	SPRING,HELICAL,EXTE.....	1
11	PAOZZ	5306002258499	96906	MS90725-34	BOLT,MACHINE 5/16-18 X 1.00.....	1

END OF FIGURE

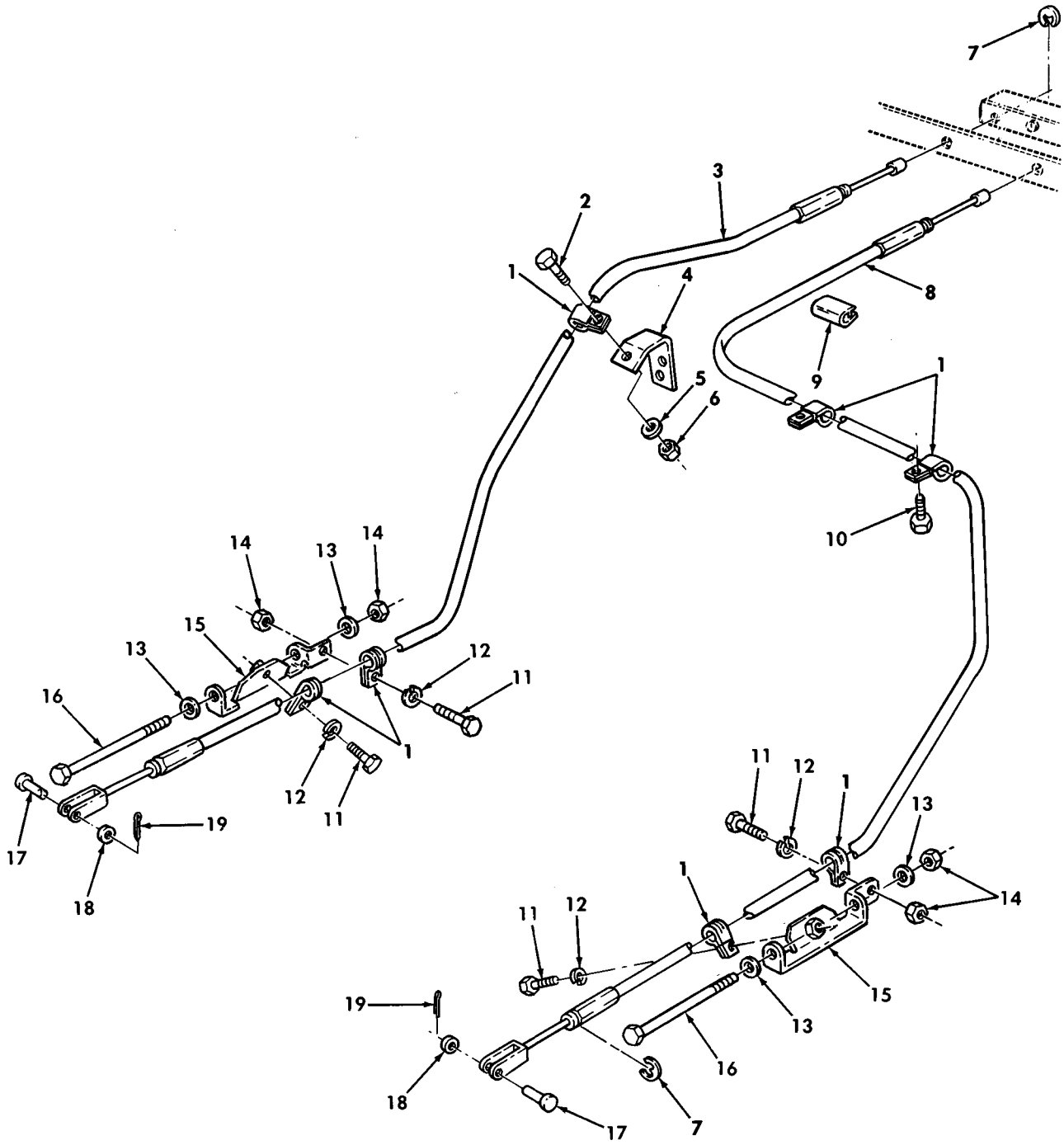

Figure 123. Parking Brake Cables and Mounting Hardware (Serial Number 299999 and Below).

(1) ITEM NO	(2) SMR CODE	(3) NSN	(4) CAGEC	(5) PART NUMBER	(6) DESCRIPTION AND USABLE ON CODES(UOC)	(7) QTY
					GROUP 1201 HAND BRAKES	
					FIG. 123 PARKING BRAKE CABLES AND MOUNTING HARDWARE (SERIAL NUMBER 299999 AND BELOW)	
1	PAOZZ	5340000881254	96906	MS21333-104	CLAMP,LOOP.....	7
2	PAOZZ	5305000680502	96906	MS90725-6	SCREW,CAP,HEXAGON H 1/4-20 X 3/4...	1
3	PAOZZ	2590012653185	92867	15541800	CONTROL ASSEMBLY,PU L.H.....	1
4	PFOZZ	5340012774427	34623	5597360	BRACKET,DOUBLE ANGL.....	1
5	PAOZZ	5310008094058	96906	MS27183-10	WASHER,FLAT 1/4.....	1
6	PAOZZ	5310011520598	24617	271172	NUT,SELF-LOCKING,AS 1/4-20.....	1
7	PAOZZ	5325004425845	96906	MS16633-1050	RING,RETAINING.....	4
8	PAOZZ	2590013235153	92867	15541802	CONTROL ASSEMBLY,PU R.H.....	1
9	PAOZZ	2590011967281	19207	12339902-1	PROTECTOR,EDGE.....	1
10	PAOZZ	5305012645809	19207	12342499-2	SCREW,TAPPING THREA #10-32 X .62...	2
11	PAOZZ	5305000687837	80204	B1821BH025C063N	SCREW,CAP,HEXAGON H 1/4-20 X .62...	4
12	PAOZZ	5310005825965	96906	MS35338-44	WASHER,LOCK 1/4.....	4
13	PAOZZ	5310011023270	24617	2436161	WASHER,FLAT 1/4.....	4
14	PAOZZ	5310014326727	24617	9419471	NUT,SELF-LOCKING,HE 1/4-20.....	4
15	PAOZZ	5340013948496	19207	12342966	BRACKET,MOUNTING L.H.....	1
15	PAOZZ	5340013942408	19207	12342965	BRACKET,MOUNTING R.H.....	1
16	PAOZZ	5305012022676	80204	B1821BH025C450N	SCREW,CAP,HEXAGON H 1/4-20 X 4.50..	2
17	PAOZZ	5315008158840	96906	MS35810-4	PIN,STRAIGHT,HEADED.....	2
18	PAOZZ	5310000806004	07860	D21059-16	WASHER,FLAT 3/8.....	2
19	PAOZZ	5315008423044	80205	MS24665-283	PIN,COTTER 3/32 X 3/4.....	2

END OF FIGURE

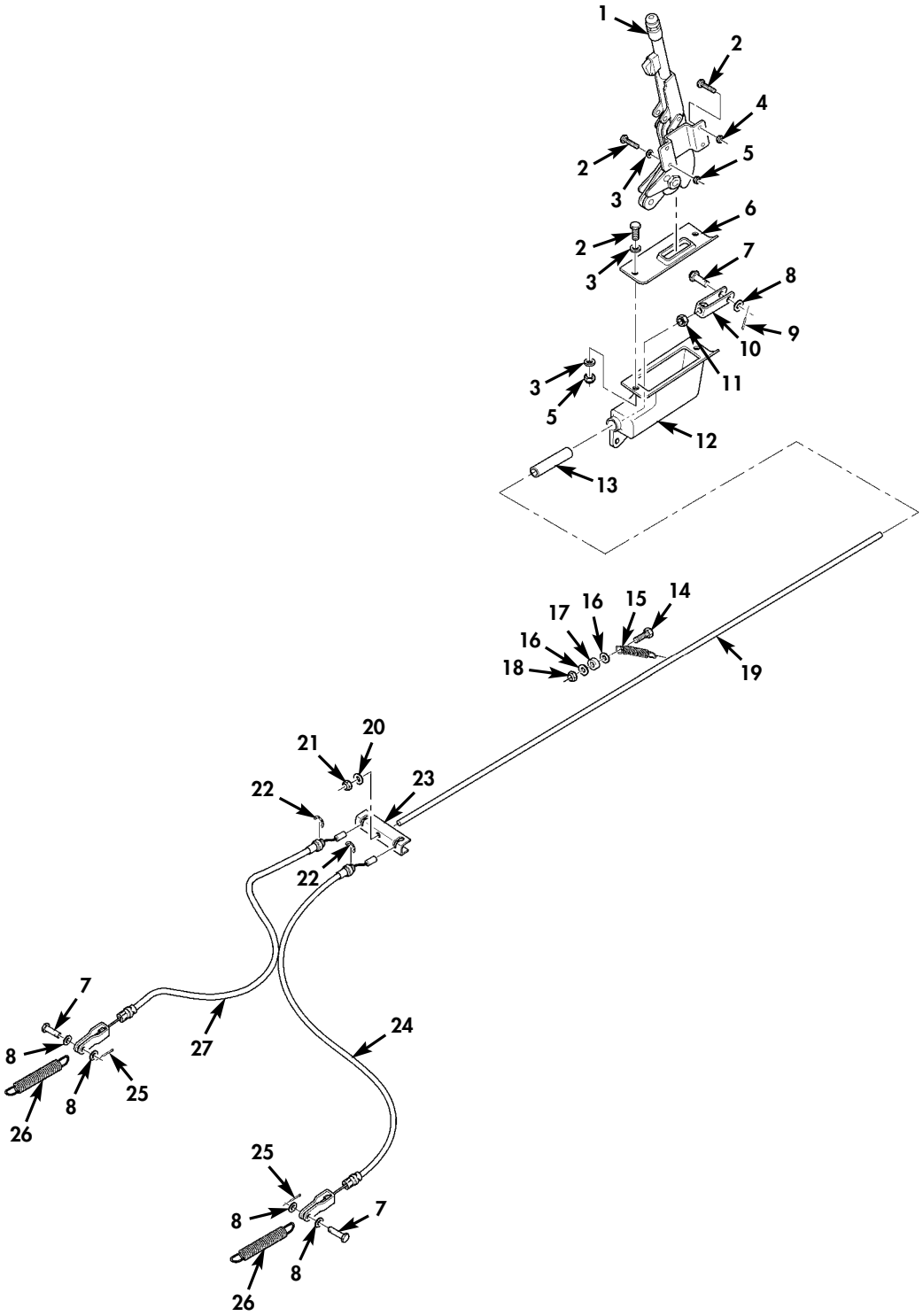

Figure 123A. Parking Brake Cables, Rod, and Hand Lever (Serial Number 300000 and Above).

(1) ITEM NO	(2) SMR CODE	(3) NSN	(4) CAGEC	(5) PART NUMBER	(6) DESCRIPTION AND USABLE ON CODES(UOC)	(7) QTY
					GROUP 1201 HAND BRAKES	
					FIG. 123A PARKING BRAKE CABLES,ROD,AND HAND LEVER(SERIAL NUMBER 300000 AND ABOVE)	
* 1	PAOZZ	5340013804561	19207	12342679	LEVER,LOCK-RELEASE..... UOC:TTA,TTT,TT1,UUA,UUU,UU1,UU2	1
* 2	PAOZZ	5305000712505	80204	B1821BH025C088N	SCREW,CAP,HEXAGON H 1/4-20 X 7/8... UOC:TTA,TTT,TT1,UUA,UUU,UU1,UU2	6
* 3	PAOZZ	5310011023270	34623	2436161	WASHER,FLAT 1/4..... UOC:TTA,TTT,TT1,UUA,UUU,UU1,UU2	6
* 4	PAOZZ	5310011520598	24617	271172	NUT,SELF-LOCKING,AS 1/4-20..... UOC:TTA,TTT,TT1,UUA,UUU,UU1,UU2	2
* 5	PAOZZ	5310014326727	24617	9419471	NUT,SELF-LOCKING,HE 1/4-20..... UOC:TTA,TTT,TT1,UUA,UUU,UU1,UU2	4
* 6	PAOZZ	2530011883520	19207	12338295	BOOT,VEHICULAR COMP..... UOC:TTA,TTT,TT1,UUA,UUU,UU1,UU2	1
* 7	PAOZZ	5315008158840	96906	MS35810-4	PIN,STRAIGHT,HEADED..... UOC:TTA,TTT,TT1,UUA,UUU,UU1,UU2	3
* 8	PAOZZ	5310014124013	24617	2436163	WASHER,FLAT 3/8..... UOC:TTA,TTT,TT1,UUA,UUU,UU1,UU2	5
* 9	PAOZZ	5315008423044	80205	MS24665-283	PIN,COTTER..... UOC:TTA,TTT,TT1,UUA,UUU,UU1,UU2	1
* 10	PAOZZ	5340012135600	92867	95001418	CLEVIS,ROD END..... UOC:TTA,TTT,TT1,UUA,UUU,UU1,UU2	1
* 11	PAOZZ	5310009054600	96906	MS51968-6	NUT,PLAIN,HEXAGON 5/16-24..... UOC:TTA,TTT,TT1,UUA,UUU,UU1,UU2	1
* 12	PAOZZ	2530011888446	19207	12338291	BOOT,VEHICULAR COMP..... UOC:TTA,TTT,TT1,UUA,UUU,UU1,UU2	1
* 13	PAOZZ	5365015657625	81851	1101001303M0359	SPACER,SLEEVE..... UOC:TTA,TTT,TT1,UUA,UUU,UU1,UU2	1
* 14	PAOZZ	5306002264827	80204	B1821BH031C100N	BOLT,MACHINE 5/16-18 X 1.00..... UOC:TTA,TTT,TT1,UUA,UUU,UU1,UU2	1
* 15	PAOZZ	5360012600700	19207	12338866	SPRING,HELICAL,EXTE..... UOC:TTA,TTT,TT1,UUA,UUU,UU1,UU2	1
* 16	PAOZZ	5310011191024	24617	2436162	WASHER,FLAT 5/16..... UOC:TTA,TTT,TT1,UUA,UUU,UU1,UU2	2
* 17	PAOZZ	5365012550965	34623	5596306	SPACER,SLEEVE..... UOC:TTA,TTT,TT1,UUA,UUU,UU1,UU2	1
* 18	PAOZZ	5310011193668	24617	9422295	NUT,SELF-LOCKING,CO 5/16-18..... UOC:TTA,TTT,TT1,UUA,UUU,UU1,UU2	1
* 19	PFOZZ	5306012736333	34623	5596803	ROD,THREADED END..... UOC:TTA,TTT,TT1,UUA,UUU,UU1,UU2	1
* 20	PAOZZ	5310012895455	19207	12341897	WASHER,CONVEX..... UOC:TTA,TTT,TT1,UUA,UUU,UU1,UU2	1
* 21	PAOZZ	5310009843807	81349	M45913/1-5FG5C	NUT,SELF-LOCKING,HE 5/16-24..... UOC:TTA,TTT,TT1,UUA,UUU,UU1,UU2	1
* 22	PAOZZ	5325004425845	96906	MS16633-1050	RING,RETAINING..... UOC:TTA,TTT,TT1,UUA,UUU,UU1,UU2	2
* 23	PFOZZ	2530012914597	19207	12341902	BAR,BRAKE CABLE..... UOC:TTA,TTT,TT1,UUA,UUU,UU1,UU2	1
* 24	PAOZZ	2530015660648	92867	15844903	CABLE AND CONDUIT A L.H.....	1

(1) ITEM NO	(2) SMR CODE	(3) NSN	(4) CAGEC	(5) PART NUMBER	(6) DESCRIPTION AND USABLE ON CODES(UOC)	(7) QTY
					UOC:TTA,TTT,TT1,UUA,UUU,UU1,UU2	
* 25	PAOZZ	5315011900430	96652	21-04	PIN,COTTER .0725 X 1.437.....	2
					UOC:TTA,TTT,TT1,UUA,UUU,UU1,UU2	
* 26	PAOZZ	5360015663298	34623	6042460	SPRING,HELICAL,EXTE.....	2
					UOC:TTA,TTT,TT1,UUA,UUU,UU1,UU2	
* 27	PAOZZ	2530015661790	92867	15844902	CABLE AND CONDUIT,A R.H.....	1
					UOC:TTA,TTT,TT1,UUA,UUU,UU1,UU2	

END OF FIGURE

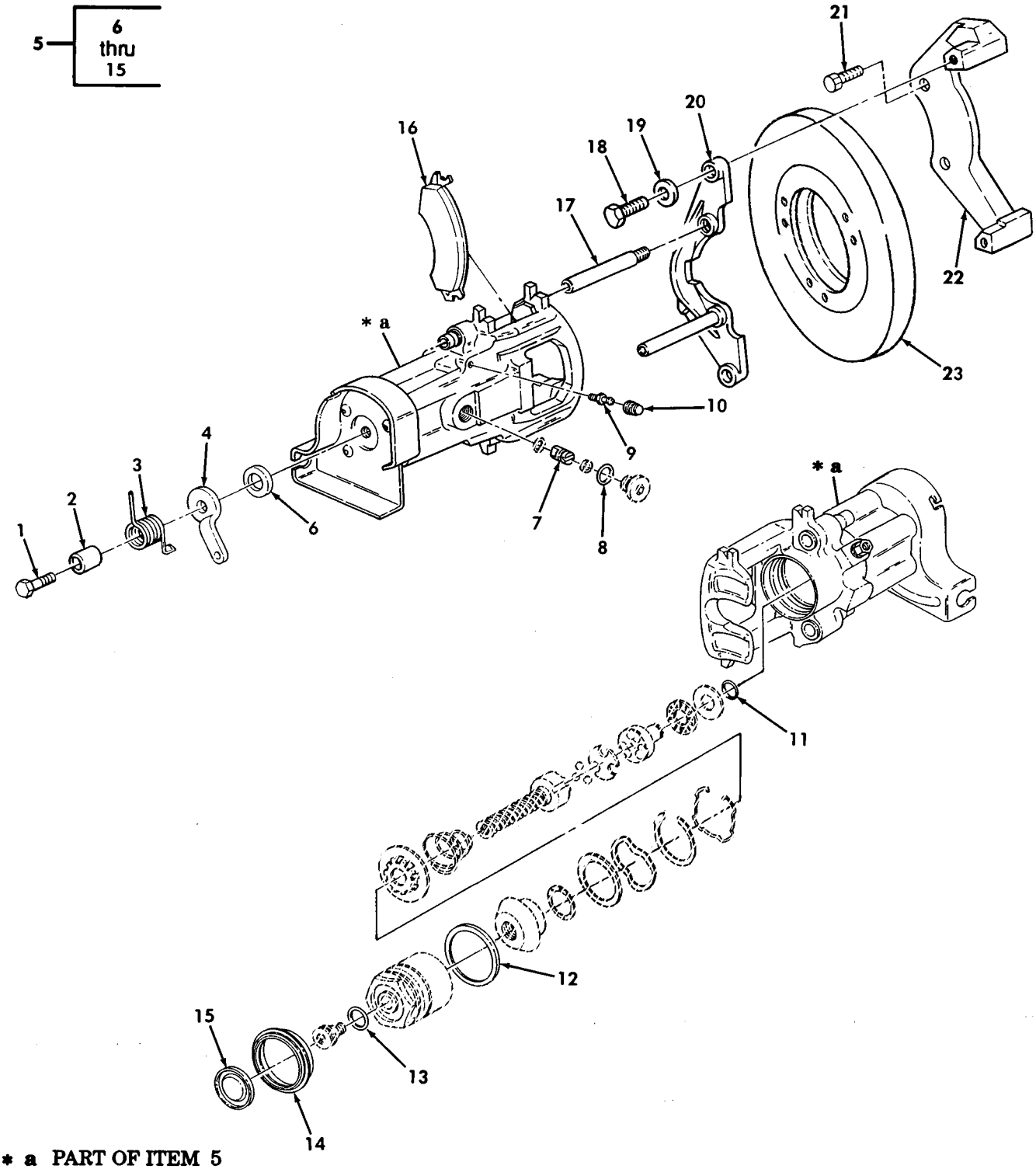

Figure 124. Rear Parking Brake and Rear Caliper Assembly (Serial Number 299999 and Below).

(1) ITEM NO	(2) SMR CODE	(3) NSN	(4) CAGEC	(5) PART NUMBER	(6) DESCRIPTION AND USABLE ON CODES(UOC)	(7) QTY
					GROUP 1201 HAND BRAKES	
					FIG. 124 REAR PARKING BRAKE AND REAR CALIPER ASSEMBLY (SERIAL NUMBER 299999 AND BELOW)	
1	PAOZZ	5305012764855	34281	109457-01	SCREW,CAP,HEXAGON H REAR.....	1
2	PAOZZ	5340012658883	34281	1215567-01	CAP,PROTECTIVE,DUST REAR.....	1
3	PAOZZ	5360012658798	34623	5741995	SPRING,HELICAL,EXTE REAR,L.H.....	1
3	PAOZZ	5360012658799	34623	5741994	SPRING,HELICAL,EXTE REAR,R.H.....	1
4	PAOZZ	2530012653148	34623	5741750	ARM,LEVER,BRAKE REAR,L.H.....	1
4	PAOZZ	2530012653153	34623	5741748	ARM,LEVER,BRAKE REAR,R.H.....	1
5	PAOFF	2530013336068	27767	12173602	CALIPER ASSEMBLY,DI REAR,L.H.....	1
5	PAOFF	2530013338263	27767	12173601	CALIPER ASSEMBLY,DI REAR,R.H.....	1
6	KFFZZ		34821	109433-01	.SEAL,ACTUATOR SHAFT PART OF KIT P/N 57K3512.....	1
7	KFFZZ		34821	120100-07	.O-RING,ANTI-ROTATIO PART OF KIT P/N 57K3512.....	1
8	KFFZZ		34821	120100-08	.O-RING,PIN RETAININ PART OF KIT P/N 57K3512.....	1
9	PAOZZ	2530003401405	34623	5578802	.BLEEDER VALVE,HYDRA REAR.....	1
10	PAOZZ	5340011861817	34723	05597172	.CAP-PLUG,PROTECTIVE REAR.....	1
11	KFFZZ		34821	120100-10	.O-RING,ACTUATOR SHA PART OF KIT P/N 57K3512.....	1
* 12	PAFZZ	5330011845421	34821	092554-01	.GASKET PART OF KIT P/N 57K3512.....	1
13	KFFZZ		34821	120100-09	.O-RING,THRUST SCREW PART OF KIT P/N 57K3512.....	1
* 14	PAFZZ	2530011857998	34821	103712-01	.BOOT, VEHICULAR COM PART OF KIT P/N 57K3512.....	1
15	KFFZZ		34271	121743-01	.CAP,PISTON PART OF KIT P/N 57K3512.	1
16	KFOZZ		34623	EX4858	DISC,BRAKE SHOE PART OF KIT P/N 57K3565.....	4
17	PAOZZ	5305011858657	34281	099912-01	SETSCREW.....	2
18	PAOZZ	5305011858692	34281	096496-01	SCREW,CAP,HEXAGON H 3/8-16 X 1.00..	2
19	PAOZZ	5310011858690	34281	091247-01	WASHER,FLAT 3/8.....	2
20	PAOZZ	2530011856713	34281	104534-01	YOKE,DISC BRAKE REAR.....	2
21	PAOZZ	5305007247220	80204	B1821BH063C150N	SCREW,CAP,HEXAGON H 5/8-11 X 1.50..	4
22	PAFZZ	2530014628079	34281	12821501	YOKE,BRAKE,VEHICULA L.H. AND R.H...	2
23	PAOFF	2530014614732	27767	1337550	ROTOR,DISC BRAKE.....	2

END OF FIGURE

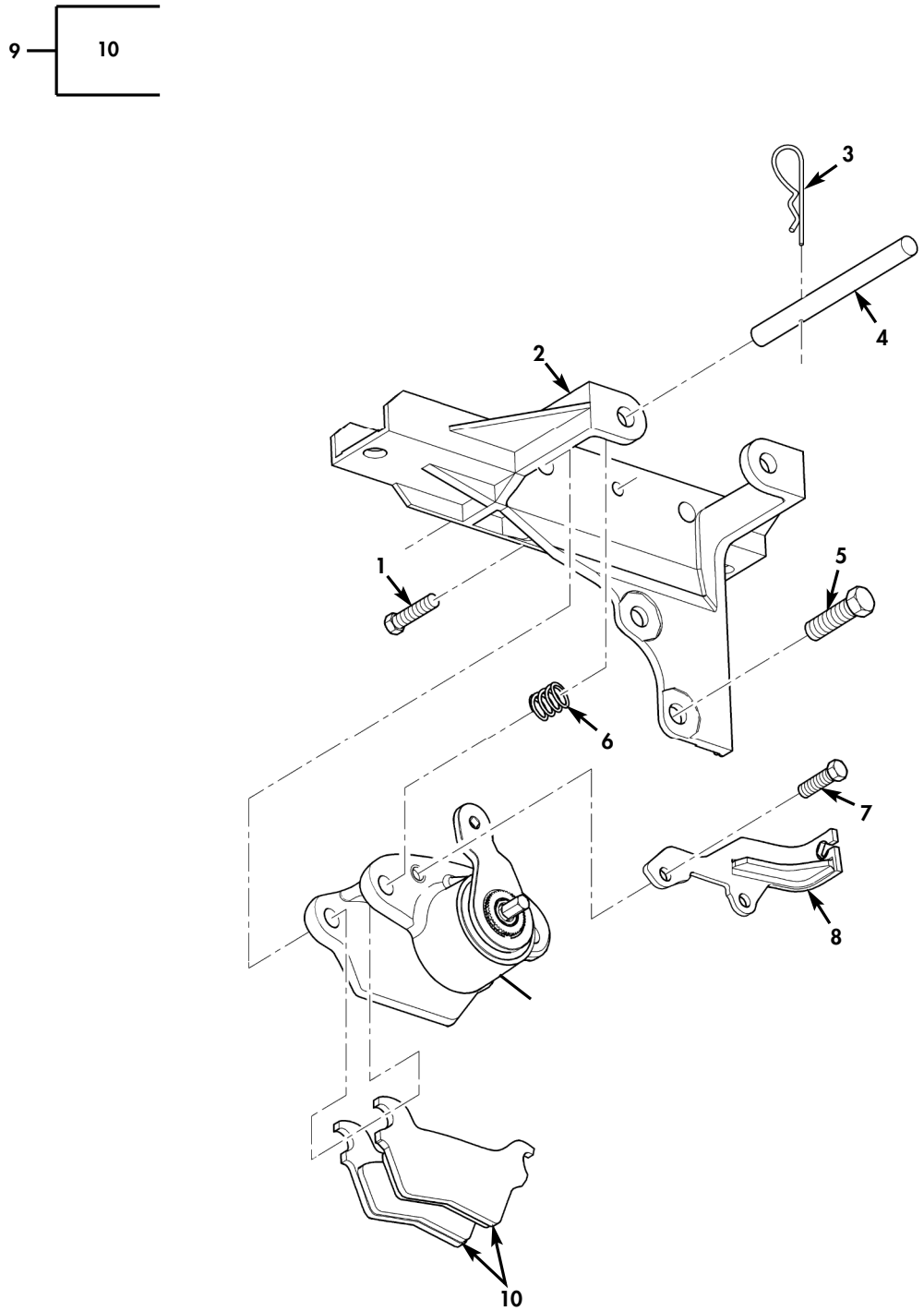

✱ **a** PART OF ITEM 9

Figure 124A. Parking Brake Assembly (Serial Number 300000 and Above).

(1) ITEM NO	(2) SMR CODE	(3) NSN	(4) CAGEC	(5) PART NUMBER	(6) DESCRIPTION AND USABLE ON CODES(UOC)	(7) QTY
					GROUP 1201 HAND BRAKES	
					FIG. 124A PARKING BRAKE ASSEMBLY (SERIAL NUMBER 300000 AND ABOVE)	
* 1	PFOZZ	5306015658902	60250	43-8891	BOLT,MACHINE 3/8-16 X 1.00..... UOC:TTA,TTT,TT1,UUA,UUU,UU1,UU2	2
* 2	PAOZZ	5340015661120	60250	93-8171	BRACKET,MOUNTING L.H..... UOC:TTA,TTT,TT1,UUA,UUU,UU1,UU2	1
* 2	PAOZZ	2590015661391	60250	93-8172	BRACKET,VEHICULAR C R.H..... UOC:TTA,TTT,TT1,UUA,UUU,UU1,UU2	1
* 3	KFOZZ	5315015657674	60250	43-9200	PIN,COTTER PART OF KIT P/N 328-7904. UOC:TTA,TTT,TT1,UUA,UUU,UU1,UU2	4
* 4	PAOZZ	5315015661401	60250	43-9171	PIN,STRAIGHT,HEADED..... UOC:TTA,TTT,TT1,UUA,UUU,UU1,UU2	4
* 5	PAOZZ	5305007247219	80204	B1821BH063C125N	SCREW,CAP,HEXAGON H 5/8-11 X 1.25.. UOC:TTA,TTT,TT1,UUA,UUU,UU1,UU2	4
* 6	KFOZZ	5360015661150	60250	40-8007	SPRING,HELICAL,COMP PART OF KIT P/N 328-7904..... UOC:TTA,TTT,TT1,UUA,UUU,UU1,UU2	4
* 7	PFOZZ	5305015658910	60250	43-9092	SCREW,CAP,HEXAGON H 3/8-16 X 3/4... UOC:TTA,TTT,TT1,UUA,UUU,UU1,UU2	4
* 8	PAOZZ	2590015661809	60250	93-8211	BRACKET,VEHICULAR C R.H..... UOC:TTA,TTT,TT1,UUA,UUU,UU1,UU2	1
* 8	PAOZZ	2590015661327	60250	93-8210	BRACKET,VEHICULAR C L.H..... UOC:TTA,TTT,TT1,UUA,UUU,UU1,UU2	1
* 9	PAOZZ	2530015661525	60250	471-8084-S	CALIPER ASSEMBLY,DI L.H..... UOC:TTA,TTT,TT1,UUA,UUU,UU1,UU2	1
* 9	PAOZZ	2530015661534	60250	471-8085-S	CALIPER ASSEMBLY,DI R.H..... UOC:TTA,TTT,TT1,UUA,UUU,UU1,UU2	1
* 10	PAOZZ		60250	244-7935	.DISC BRAKE SHOE SET CONTAINS 2 PADS PART OF KIT P/N 328-7904..... UOC:TTA,TTT,TT1,UUA,UUU,UU1,UU2	1

END OF FIGURE

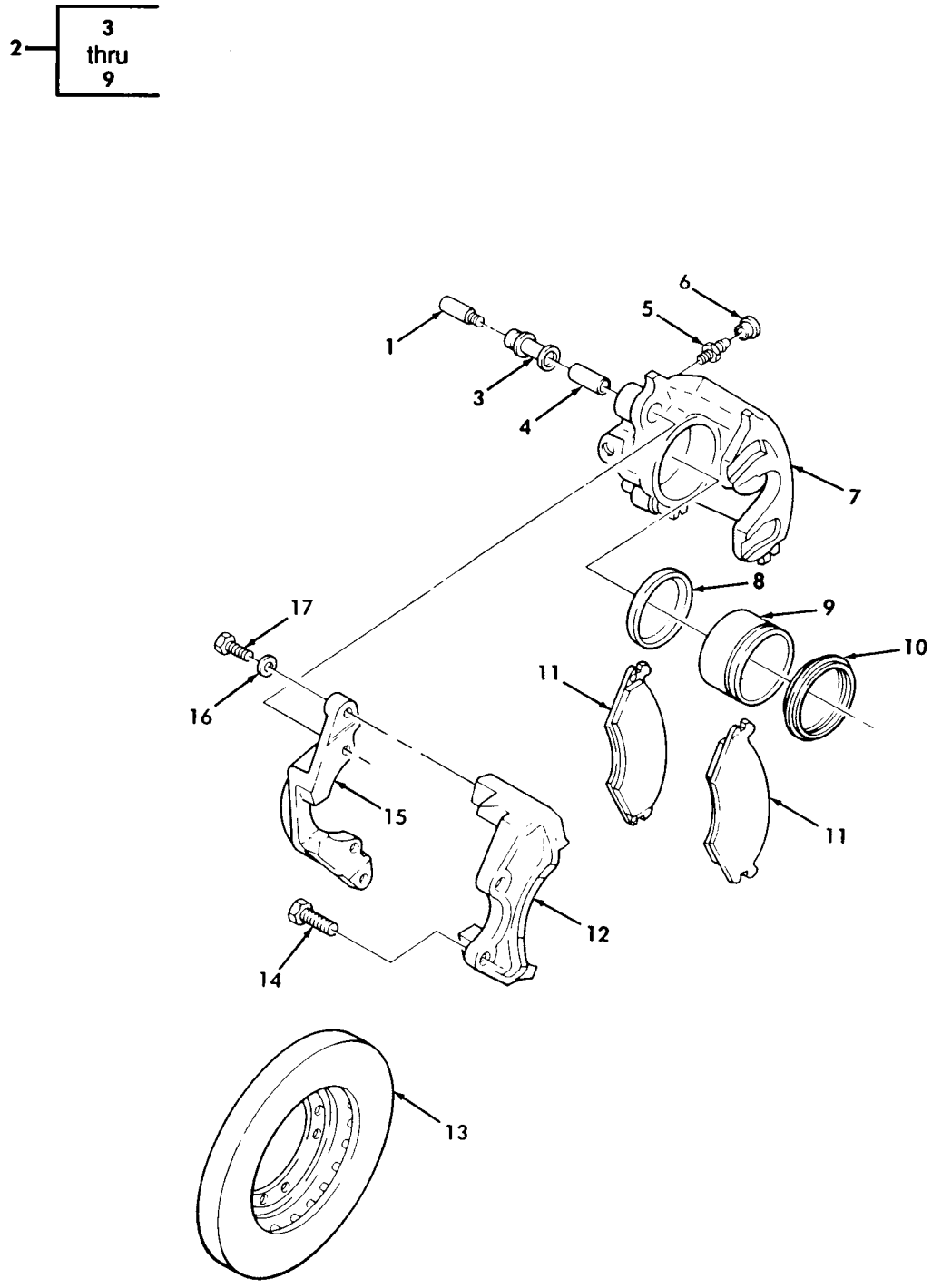

Figure 125. Front Service Brake Caliper Assembly and Rotor (Serial Number 299999 and Below).

(1) ITEM NO	(2) SMR CODE	(3) NSN	(4) CAGEC	(5) PART NUMBER	(6) DESCRIPTION AND USABLE ON CODES(UOC)	(7) QTY
					GROUP 1202 SERVICE BRAKES	
					FIG. 125 FRONT SERVICE BRAKE CALIPER ASSEMBLY AND ROTOR (SERIAL NUMBER 299999 AND BELOW)	
1	PAOZZ	5305011858657	34623	12342339	SETSCREW.....	4
2	PAOFF	2530014849573	1S0R6	103700-10	HOUSING ASSEMBLY,CA FRONT,L.H.....	1
2	PAOFF	2530014849574	1S0R6	103700-09	HOUSING ASSEMBLY,CA FRONT,R.H.....	1
3	PAOZZ	5365011867233	34281	108037-01	.BUSHING,NONMETALLIC.....	2
4	PAOZZ	3120011867181	34623	5578794	.BEARING,SLEEVE.....	2
5	PAOZZ	2530003401405	34623	5578802	.BLEEDER VALVE,HYDRA.....	1
6	PAOZZ	5340011861817	34623	5597172	.CAP-PLUG,PROTECTIVE.....	1
7	XAOZZ		34281	103706-02	.HOUSING,CALIPER L.H.,FRONT.....	1
7	XAOZZ		34281	103705-01	.HOUSING,CALIPER R.H.,FRONT.....	1
8	PAFZZ	5330011845421	34281	092554-01	.GASKET PART OF KIT P/N 104870-01...	1
9	PAFZZ	2530011856714	34281	10371009	.PISTON,DISC BRAKE.....	1
10	PAFZZ	2530011857998	34281	103712-01	BOOT,VEHICULAR COM PART OF KIT P/N 104870-01.....	1
11	KFOZZ		34623	EX4858	DISC,BRAKE SHOE PART OF KIT P/N 57K3565.....	4
12	PFFZZ	2530014628079	34281	12821501	YOKE,BRAKE,VEHICULA R.H.,FRONT.....	1
12	PFFZZ	2530014628068	34281	12821801	YOKE,BRAKE,VEHICULA L.H.,FRONT.....	1
13	PAOFF	2530014614732	34623	EX4857	ROTOR,DISC BRAKE.....	2
14	PAOZZ	5305007247220	80204	B1821BH063C150N	SCREW,CAP,HEXAGON H 5/8-11 X 1.50..	8
15	PFOZZ	2530011856713	34281	104534-01	YOKE,DISC BRAKE.....	2
16	PAOZZ	5310011858690	34281	091247-01	WASHER,FLAT 3/8.....	2
17	PAOZZ	5305011858692	7X677	9424320	SCREW,CAP,HEXAGON H 3/8-16 X 1.00..	2

END OF FIGURE

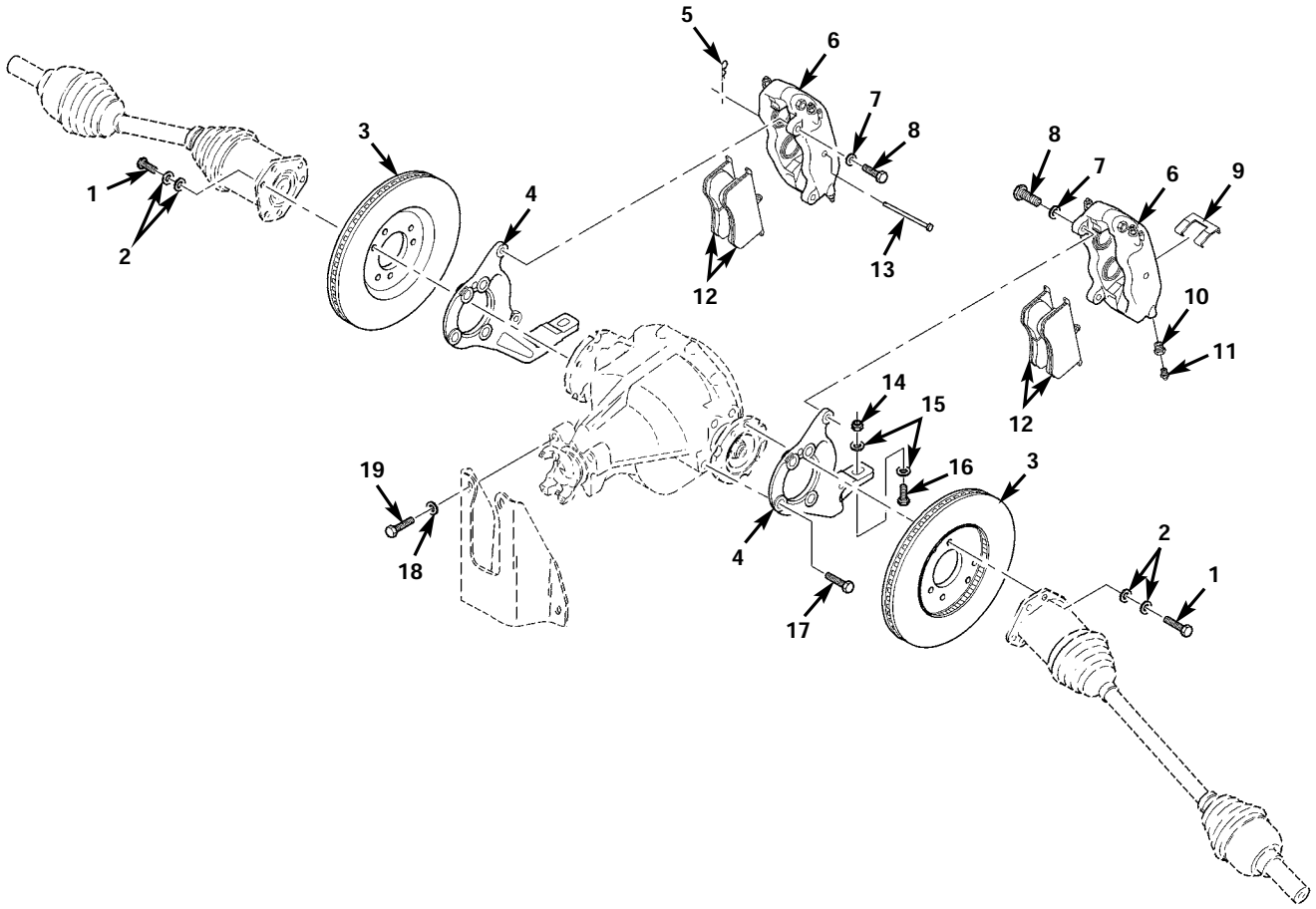

Figure 125A. Front Service Brake Caliper Assembly and Rotor (Serial Number 300000 and Above).

(1) ITEM NO	(2) SMR CODE	(3) NSN	(4) CAGEC	(5) PART NUMBER	(6) DESCRIPTION AND USABLE ON CODES(UOC)	(7) QTY
					GROUP 1202 SERVICE BRAKES	
					FIG. 125A FRONT SERVICE BRAKE CALIPER ASSEMBLY AND ROTOR(SERIAL NUMBER 300000 AND ABOVE)	
* 1	PAOZZ	5306011857048	7X677	11513606	BOLT,MACHINE M10 X 1.5 X 35MM..... UOC:TTA,TTT,TT1,UUA,UUU,UU1,UU2	12
* 2	PAOZZ	5310014573292	1PUD1	NL-10	WASHER,CAMLOCK 10MM..... UOC:TTA,TTT,TT1,UUA,UUU,UU1,UU2	24
* 3	PAOZZ	2530015670893	04XS7	Z-160-9535	ROTOR,DISC BRAKE..... UOC:TTA,TTT,TT1,UUA,UUU,UU1,UU2	2
* 4	PFFZZ	2530015670232	04XS7	Z-250-9944	ADAPTER,CALIPER,DIS L.H..... UOC:TTA,TTT,TT1,UUA,UUU,UU1,UU2	1
* 4	PFFZZ	2530015670400	04XS7	Z-250-9943	ADAPTER,CALIPER,DIS R.H..... UOC:TTA,TTT,TT1,UUA,UUU,UU1,UU2	1
* 5	KFOZZ		04XS7	310-9951	PIN CLIP PART OF KIT P/N 5717285.... UOC:TTA,TTT,TT1,UUA,UUU,UU1,UU2	2
* 6	PAOZZ	2530015659660	34623	6040401	CALIPER,DISC BRAKE..... UOC:TTA,TTT,TT1,UUA,UUU,UU1,UU2	1
* 7	PAOZZ	5310012789555	34623	2436164	WASHER,FLAT 7/16..... UOC:TTA,TTT,TT1,UUA,UUU,UU1,UU2	4
* 8	PAOZZ	5305000711788	80204	B1821BH044C125N	SCREW,CAP,HEXAGON H 7/16-14 X 1.25. UOC:TTA,TTT,TT1,UUA,UUU,UU1,UU2	4
* 9	KFOZZ		04XS7	300-10467	PLATE,WEAR,BRAKE SH PART OF KIT P/N 5717286..... UOC:TTA,TTT,TT1,UUA,UUU,UU1,UU2	2
* 10	KFOZZ		04XS7	220-9968	BRASS ADAPTER PART OF KIT P/N 5717287..... UOC:TTA,TTT,TT1,UUA,UUU,UU1,UU2	2
* 11	KFOZZ		04XS7	220-9969	VALVE,BLEEDER,SCREW PART OF KIT P/N 5717287..... UOC:TTA,TTT,TT1,UUA,UUU,UU1,UU2	2
* 12	KFOZZ		04XS7	150-9841	DISC BRAKE SHOE SET CONTAINS 2 PADS. PART OF KIT P/N 5717285..... UOC:TTA,TTT,TT1,UUA,UUU,UU1,UU2	1
* 13	KFOZZ		04XS7	330-9950	RETENTION PIN PART OF KIT P/N 5717285 UOC:TTA,TTT,TT1,UUA,UUU,UU1,UU2	2
* 14	PAFZZ	5310004883889	96906	MS51943-39	NUT,SELF-LOCKING,HE 1/2-13..... UOC:TTA,TTT,TT1,UUA,UUU,UU1,UU2	2
* 15	PAFZZ	5310008664417	19207	10910174-5	WASHER,FLAT 1/2..... UOC:TTA,TTT,TT1,UUA,UUU,UU1,UU2	4
* 16	PAFZZ	5305000712070	80204	B1821BH050C175N	SCREW,CAP,HEXAGON H 1/2-13 X 1.75.. UOC:TTA,TTT,TT1,UUA,UUU,UU1,UU2	2
* 17	PAFZZ	5305007247220	80204	B1821BH063C150N	SCREW,CAP,HEXAGON H 5/8-11 X 1.50.. UOC:TTA,TTT,TT1,UUA,UUU,UU1,UU2	8
* 18	PAOZZ	5310011517347	24617	2436167	WASHER,FLAT 5/8..... UOC:TTA,TTT,TT1,UUA,UUU,UU1,UU2	2
* 19	PAOZZ	5305007247219	80204	B1821BH063C125N	SCREW,CAP,HEXAGON H 5/8-11 X 1.25.. UOC:TTA,TTT,TT1,UUA,UUU,UU1,UU2	2

END OF FIGURE

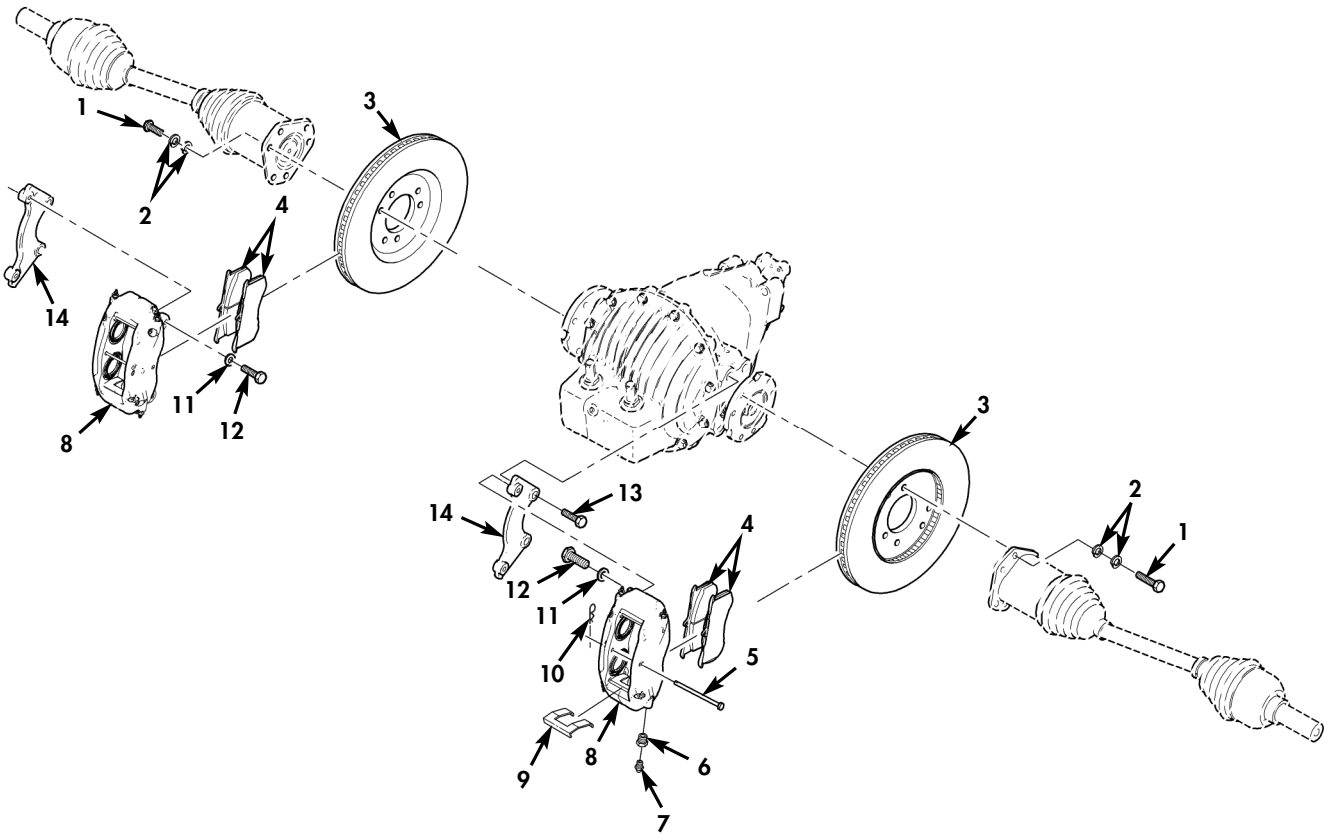

Figure 125B. Rear Service Brake Caliper Assembly and Rotor (Serial Number 300000 and Above).

(1) ITEM NO	(2) SMR CODE	(3) NSN	(4) CAGEC	(5) PART NUMBER	(6) DESCRIPTION AND USABLE ON CODES(UOC)	(7) QTY
					GROUP 1202 HYDRAULIC BRAKE SYSTEM	
					FIG. 125B REAR SERVICE BRAKE CALIPER ASSEMBLY AND ROTOR(SERIAL NUMBER 300000 AND ABOVE)	
* 1	PAOZZ	5306011857048	7X677	11513606	BOLT,MACHINE M10-1.5 X 35MM..... UOC:TTA,TTT,TT1,UUA,UUU,UU1,UU2	12
* 2	PAOZZ	5310014573292	1PUD1	NL-10	WASHER,CAMLOCK..... UOC:TTA,TTT,TT1,UUA,UUU,UU1,UU2	24
* 3	PAOZZ	2530015670893	04XS7	Z-160-9535	ROTOR,DISC BRAKE..... UOC:TTA,TTT,TT1,UUA,UUU,UU1,UU2	2
* 4	KFOZZ		04XS7	150-9841	DISC BRAKE SHOE SET CONTAINS 2 PADS PART OF KIT P/N 5717285..... UOC:TTA,TTT,TT1,UUA,UUU,UU1,UU2	1
* 5	KFOZZ		04XS7	330-9950	RETENTION PIN PART OF KIT P/N 5717285..... UOC:TTA,TTT,TT1,UUA,UUU,UU1,UU2	2
* 6	KFOZZ		04XS7	220-9968	BRASS ADAPTER PART OF KIT P/N 5717287..... UOC:TTA,TTT,TT1,UUA,UUU,UU1,UU2	2
* 7	KFOZZ		04XS7	220-9969	VALVE,BLEEDER,SCREW PART OF KIT P/N 5717287..... UOC:TTA,TTT,TT1,UUA,UUU,UU1,UU2	2
* 8	PAOZZ	2530015659660	34623	6040401	CALIPER,DISC BRAKE..... UOC:TTA,TTT,TT1,UUA,UUU,UU1,UU2	1
* 9	KFOZZ		04XS7	300-10467	PLATE,WEAR,BRAKE SH PART OF KIT P/N 5717286..... UOC:TTA,TTT,TT1,UUA,UUU,UU1,UU2	2
* 10	KFOZZ		04XS7	310-9951	PIN CLIP PART OF KIT P/N 5717285.... UOC:TTA,TTT,TT1,UUA,UUU,UU1,UU2	2
* 11	PAOZZ	5310012789555	34623	2436164	WASHER,FLAT 7/16..... UOC:TTA,TTT,TT1,UUA,UUU,UU1,UU2	4
* 12	PAOZZ	5305000711788	80204	B1821BH044C125N	SCREW,CAP,HEXAGON H 7/16-14 X 1.25. UOC:TTA,TTT,TT1,UUA,UUU,UU1,UU2	4
* 13	PAFZZ	5305007247220	80204	B1821BH063C150N	SCREW,CAP,HEXAGON H 5/8-11 X 1.50.. UOC:TTA,TTT,TT1,UUA,UUU,UU1,UU2	4
* 14	PFFZZ	2530015670607	04XS7	Z-250-9942	ADAPTER,CALIPER,DIS L.H..... UOC:TTA,TTT,TT1,UUA,UUU,UU1,UU2	1
* 14	PFFZZ	2530015670587	04XS7	Z-250-9941	ADAPTER,CALIPER,DIS R.H..... UOC:TTA,TTT,TT1,UUA,UUU,UU1,UU2	1

END OF FIGURE

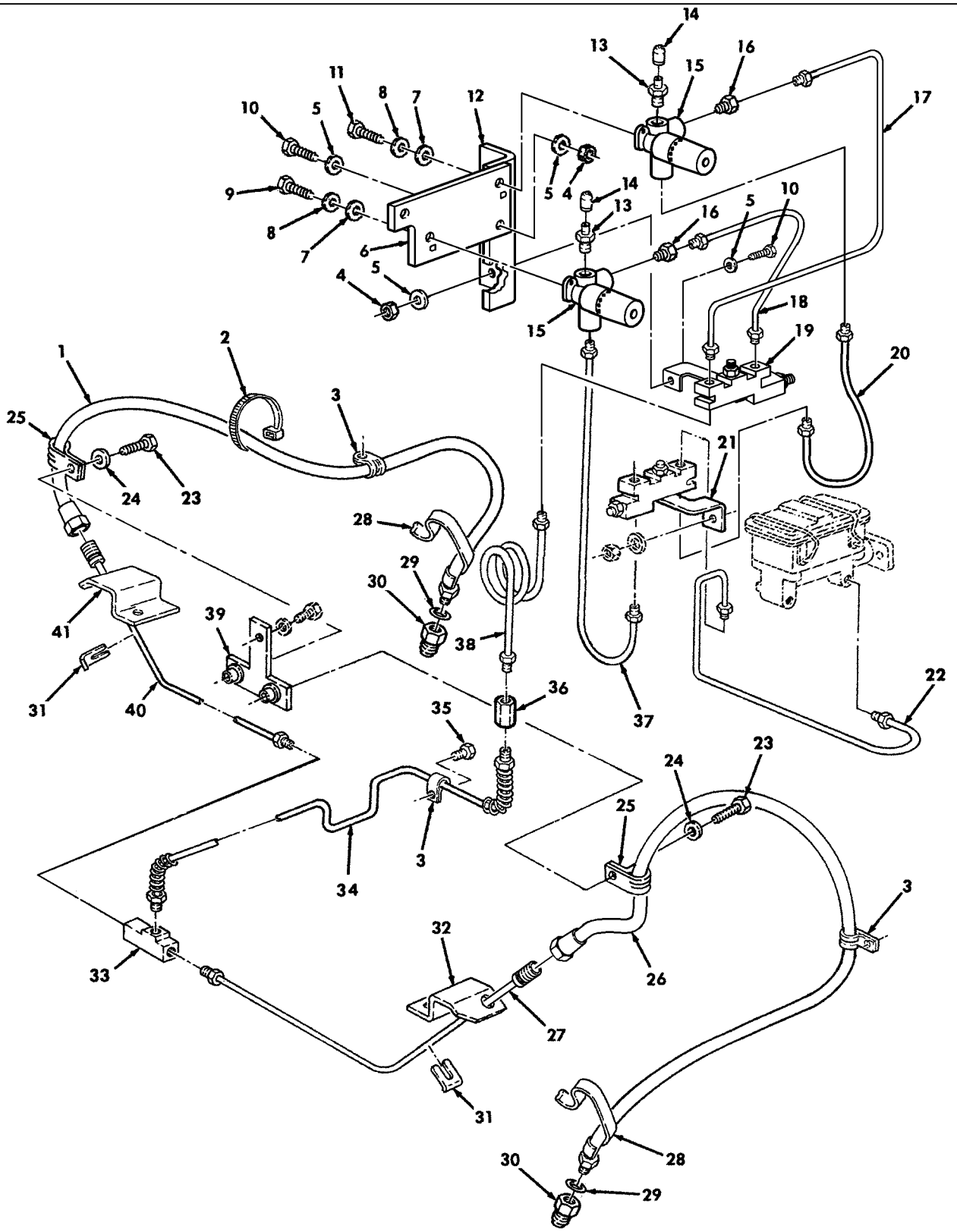

Figure 126. Front Service Brake Lines and Proportioning Valve (Serial Number 299999 and Below).

(1) ITEM NO	(2) SMR CODE	(3) NSN	(4) CAGEC	(5) PART NUMBER	(6) DESCRIPTION AND USABLE ON CODES(UOC)	(7) QTY
					GROUP 1204 HYDRAULIC BRAKE SYSTEM	
					FIG. 126 FRONT SERVICE BRAKE LINES AND PROPORTIONING VALVE (SERIAL NUMBER 299999 AND BELOW)	
1	PAOZZ	4720014429875	34623	RCSK18434-2	HOSE ASSEMBLY,NONME.....	1
2	PAOZZ	5975009846582	96906	MS3367-1-0	STRAP,TIEDOWN,ELECT.....	1
3	PAOZZ	5340009848540	96906	MS21333-102	CLAMP,LOOP.....	3
4	PAOZZ	5310011193668	24617	9422295	NUT,SELF-LOCKING,CO.....	2
5	PAOZZ	5310011191024	24617	2436162	WASHER,FLAT.....	4
6	PFOZZ	5340014885630	19207	12469466	BRACKET,MOUNTING.....	1
7	PAOZZ	5310014624611	7X677	11508788	WASHER,FLAT #8.....	2
8	PAOZZ	5310014440605	7X677	19439511	WASHER,LOCK #8.....	2
9	PAOZZ	5305011491938	7X677	11500815	SCREW,CAP,HEXAGON H M8 X 1.25 X 16.	1
10	PAOZZ	5306002264825	80204	B1821BH031C075N	BOLT,MACHINE.....	2
11	PAOZZ	5306011971492	7X677	1158687	BOLT,MACHINE.....	1
12	PAOZZ	5340014732667	34623	EX5024	BRACKET,ANGLE.....	1
13	PAOZZ	4820014733580	34623	12469216	VALVE,BLEEDER,HYDRA.....	2
14	PAOZZ	5340014734031	34623	12469217	CAP,PROTECTIVE,DUST.....	2
15	PAOZZ	4820014560168	34623	RCSK18136	VALVE,LINEAR,DIRECT PRESSURE LIMITING.....	2
* 16	PAOZZ	4730015603024	19207	12469461	ADAPTER.....	4
17	PAOZZ	4710014731749	34623	EX5054	TUBE ASSEMBLY,METAL.....	1
18	PAOZZ	4710014731744	34623	EX5053	TUBE ASSEMBLY,METAL.....	1
19	PAOZZ	4820013599489	19207	12339353-1	VALVE,REGULATING,FL.....	1
20	PAOZZ	4710014731654	34623	EX4499	TUBE ASSEMBLY,METAL.....	1
21	PAOZZ	2530014732724	34623	EX5025	CYLINDER,HYDRAULIC.....	1
22	PAOZZ	4710013581943	19207	12342900	TUBE ASSEMBLY,METAL.....	1
23	PAOZZ	5306002264828	80204	B1821BH031C113N	BOLT,MACHINE 5/16-18 X 1.13.....	2
24	PAOZZ	5310000814219	96906	MS27183-12	WASHER,FLAT.....	2
25	PAOZZ	5340000573043	96906	MS21333-112	CLAMP,LOOP.....	2
26	PAOZZ	4720014433033	34623	12460509	HOSE ASSEMBLY,NONME L.H.....	1
27	PAOZZ	4710014343151	19207	12460269-1	TUBE ASSEMBLY,METAL.....	1
28	MOOZZ		81349	B47287-II-1/2	TUBING,PLASTIC,SPIR MAKE FROM TUBING,P/N B47287-II-1/2,27 INCHES LONG.....	2
29	PAOZZ	5310011898476	34623	5582366	WASHER,FLAT 25/64.....	2
30	PAOZZ	4730011846971	34623	12339235	COUPLING,TUBE.....	2
31	PAOZZ	5342006781753	19207	7331407	CLIP,HAND BRAKE CAB.....	2
32	PAOZA	5340014348109	34623	EX4228-2	BRACKET,MULTIPLE AN.....	1
33	PAOZZ	4730002871706	7X677	178654	TEE,TUBE.....	1
34	PAOZZ	4710014343037	19207	12460301	TUBE ASSEMBLY,METAL.....	1
35	PAOZZ	5305013936311	24617	271153	SCREW,TAPPING.....	1
36	PAOZZ	4730014570727	72582	442393	COUPLING,HOSE.....	1
37	PAOZZ	4720014562944	34623	EX4786-1	HOSE ASSEMBLY,NONME FRONT BRAKES...	1
38	PAOZZ	4710011859667	34623	5584146	TUBE ASSEMBLY,METAL.....	1
39	PAOZZ	5340014588236	34623	EC12460521B1	BRACKET,T.....	1
40	PAOZZ	4710014727011	19207	12460269-2	TUBE ASSEMBLY,METAL.....	1
41	PAOZZ	5340014328681	34623	EC12460241B1	BRACKET,MULTIPLE AN.....	1

END OF FIGURE

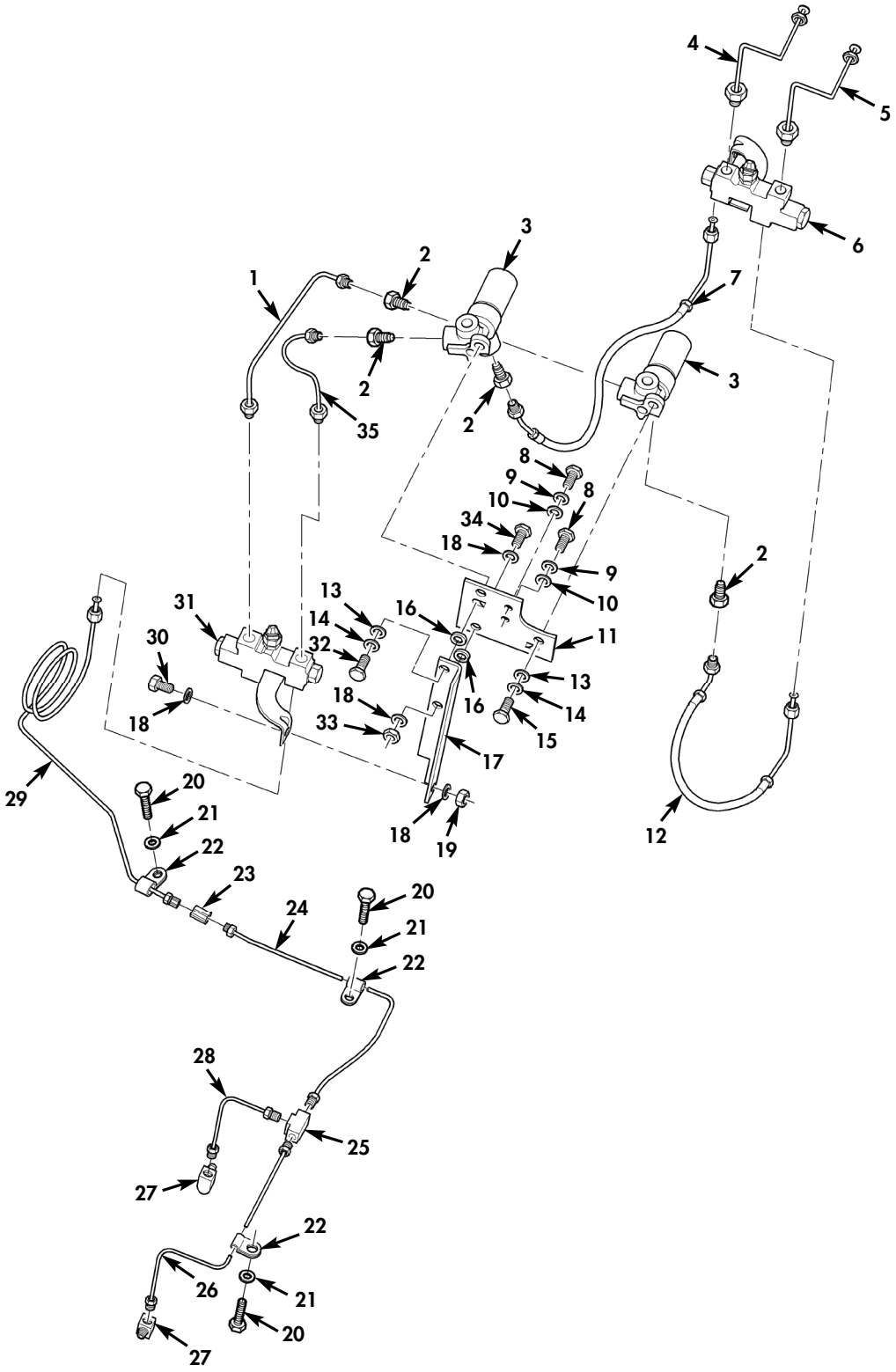

Figure 126A. Front Service Brake Lines, Fittings, and Proportioning Valve (Serial Number 300000 and Above).

(1) ITEM NO	(2) SMR CODE	(3) NSN	(4) CAGEC	(5) PART NUMBER	(6) DESCRIPTION AND USABLE ON CODES(UOC)	(7) QTY
					GROUP 1204 HYDRAULIC BRAKE SYSTEM	
					FIG. 126A FRONT SERVICE BRAKE LINES, FITTINGS,AND PROPORTIONING VALVE (SERIAL NUMBER 300000 AND ABOVE)	
* 1	PAOZZ	4710014885625	19207	12469465	TUBE ASSEMBLY,METAL..... UOC:TTA,TTT,TT1,UUA,UUU,UU1,UU2	1
* 2	PAOZZ	4730015603024	19207	12469461	ADAPTER,STRAIGHT,PI..... UOC:TTA,TTT,TT1,UUA,UUU,UU1,UU2	4
* 3	PAOZZ	4820014560168	34623	RCSK18136	VALVE,LINEAR,DIRECT..... UOC:TTA,TTT,TT1,UUA,UUU,UU1,UU2	2
* 4	PAOZZ	4710015661660	34623	6036845	TUBE ASSEMBLY,METAL..... UOC:TTA,TTT,TT1,UUA,UUU,UU1,UU2	1
* 5	PAOZZ	4710015661676	34623	6036848	TUBE ASSEMBLY,METAL..... UOC:TTA,TTT,TT1,UUA,UUU,UU1,UU2	1
* 6	PAOZZ	2530014732724	34623	EX5025	CYLINDER,HYDRAULIC..... UOC:TTA,TTT,TT1,UUA,UUU,UU1,UU2	1
* 7	PAOZZ	4720015663654	34623	6041618	HOSE ASSEMBLY,NONME..... UOC:TTA,TTT,TT1,UUA,UUU,UU1,UU2	1
* 8	PAOZZ	5305000712505	80204	B1821BH025C088N	SCREW,CAP,HEXAGON H 1/4-20 X 7/8.... UOC:TTA,TTT,TT1,UUA,UUU,UU1,UU2	2
* 9	PAOZZ	5310005825965	80205	MS35338-44	WASHER,LOCK 1/4..... UOC:TTA,TTT,TT1,UUA,UUU,UU1,UU2	2
* 10	PAOZZ	5310011023270	34623	2436161	WASHER,FLAT 1/4..... UOC:TTA,TTT,TT1,UUA,UUU,UU1,UU2	2
* 11	PAOZZ	5340015661548	34623	6038872	PLATE,MOUNTING..... UOC:TTA,TTT,TT1,UUA,UUU,UU1,UU2	1
* 12	PAOZZ	4720015659204	34623	6041613	HOSE ASSEMBLY,NONME..... UOC:TTA,TTT,TT1,UUA,UUU,UU1,UU2	1
* 13	PAOZZ	5310014624611	7X677	11508788	WASHER,FLAT 8..... UOC:TTA,TTT,TT1,UUA,UUU,UU1,UU2	2
* 14	PAOZZ	5310015485182	24617	11500206	WASHER,LOCK 8..... UOC:TTA,TTT,TT1,UUA,UUU,UU1,UU2	2
* 15	PAOZZ	5305011491938	7X677	11500815	SCREW,CAP,HEXAGON H M8-1.25 X 16 MM. UOC:TTA,TTT,TT1,UUA,UUU,UU1,UU2	1
* 16	PFOZZ	5365015663566	34623	6043241	SPACER,RING..... UOC:TTA,TTT,TT1,UUA,UUU,UU1,UU2	2
* 17	PAOZZ	5340014885619	19207	12469463	BRACKET,ANGLE..... UOC:TTA,TTT,TT1,UUA,UUU,UU1,UU2	1
* 18	PAOZZ	5310011191024	24617	2436162	WASHER,FLAT 5/16..... UOC:TTA,TTT,TT1,UUA,UUU,UU1,UU2	4
* 19	PAOZZ	5310011193668	24617	9422295	NUT,SELF-LOCKING,CO 5/16-18..... UOC:TTA,TTT,TT1,UUA,UUU,UU1,UU2	1
* 20	PAOZZ	5305013936311	24617	271153	SCREW,TAPPING 3/8-16 X 5/8..... UOC:TTA,TTT,TT1,UUA,UUU,UU1,UU2	3
* 21	PAOZZ	5310014124013	24617	2436163	WASHER,FLAT 3/8..... UOC:TTA,TTT,TT1,UUA,UUU,UU1,UU2	3
* 22	PAOZZ	5340009546014	80205	MS21333-121	CLAMP,LOOP..... UOC:TTA,TTT,TT1,UUA,UUU,UU1,UU2	3
* 23	PAOZZ	4730014570727	24617	442393	COUPLING,HOSE..... UOC:TTA,TTT,TT1,UUA,UUU,UU1,UU2	1

(1) ITEM NO	(2) SMR CODE	(3) NSN	(4) CAGEC	(5) PART NUMBER	(6) DESCRIPTION AND USABLE ON CODES(UOC)	(7) QTY
* 24	PAOZZ	4710015659209	34623	6042051	TUBE ASSEMBLY,METAL R.H.,FRONT..... UOC:TTA,TTT,TT1,UUA,UUU,UU1,UU2	1
* 25	PAOZZ	4730002871706	81343	SAE J512 3-3-3 0 40401BA	TEE,TUBE..... UOC:TTA,TTT,TT1,UUA,UUU,UU1,UU2	1
* 26	PAOZZ	4710015661672	34623	6032324	TUBE ASSEMBLY,METAL R.H..... UOC:TTA,TTT,TT1,UUA,UUU,UU1,UU2	1
* 27	PAOZZ	4730011991878	01276	402X3	ELBOW,PIPE..... UOC:TTA,TTT,TT1,UUA,UUU,UU1,UU2	2
* 28	PAOZZ	4710015661567	34623	6032203	TUBE ASSEMBLY,METAL L.H..... UOC:TTA,TTT,TT1,UUA,UUU,UU1,UU2	1
* 29	PAOZZ	4710015662939	34623	6041616	TUBE ASSEMBLY,METAL FRONT..... UOC:TTA,TTT,TT1,UUA,UUU,UU1,UU2	1
* 30	PAOZZ	5306002264825	80204	B1821BH031C075N	BOLT,MACHINE 5/16-18 X 3/4..... UOC:TTA,TTT,TT1,UUA,UUU,UU1,UU2	1
* 31	PAOZZ	4820013599489	19207	12339353-1	VALVE,REGULATING,FL..... UOC:TTA,TTT,TT1,UUA,UUU,UU1,UU2	1
* 32	PAOZZ	5305015544493	39428	91280A534	SCREW,CAP,HEXAGON H M8-1.25 X 25MM UOC:TTA,TTT,TT1,UUA,UUU,UU1,UU2	1
* 33	PAOZZ	5310008140673	81349	M45913/3-5CG8C	NUT,SELF-LOCKING,HE 5/16-18..... UOC:TTA,TTT,TT1,UUA,UUU,UU1,UU2	1
* 34	PAOZZ	5306002264828	80204	B1821BH031C113N	BOLT,MACHINE 5/16-18 X 1.125..... UOC:TTA,TTT,TT1,UUA,UUU,UU1,UU2	1
* 35	PAOZZ	4710014885621	19207	12469464	TUBE ASSEMBLY,METAL..... UOC:TTA,TTT,TT1,UUA,UUU,UU1,UU2	1

END OF FIGURE

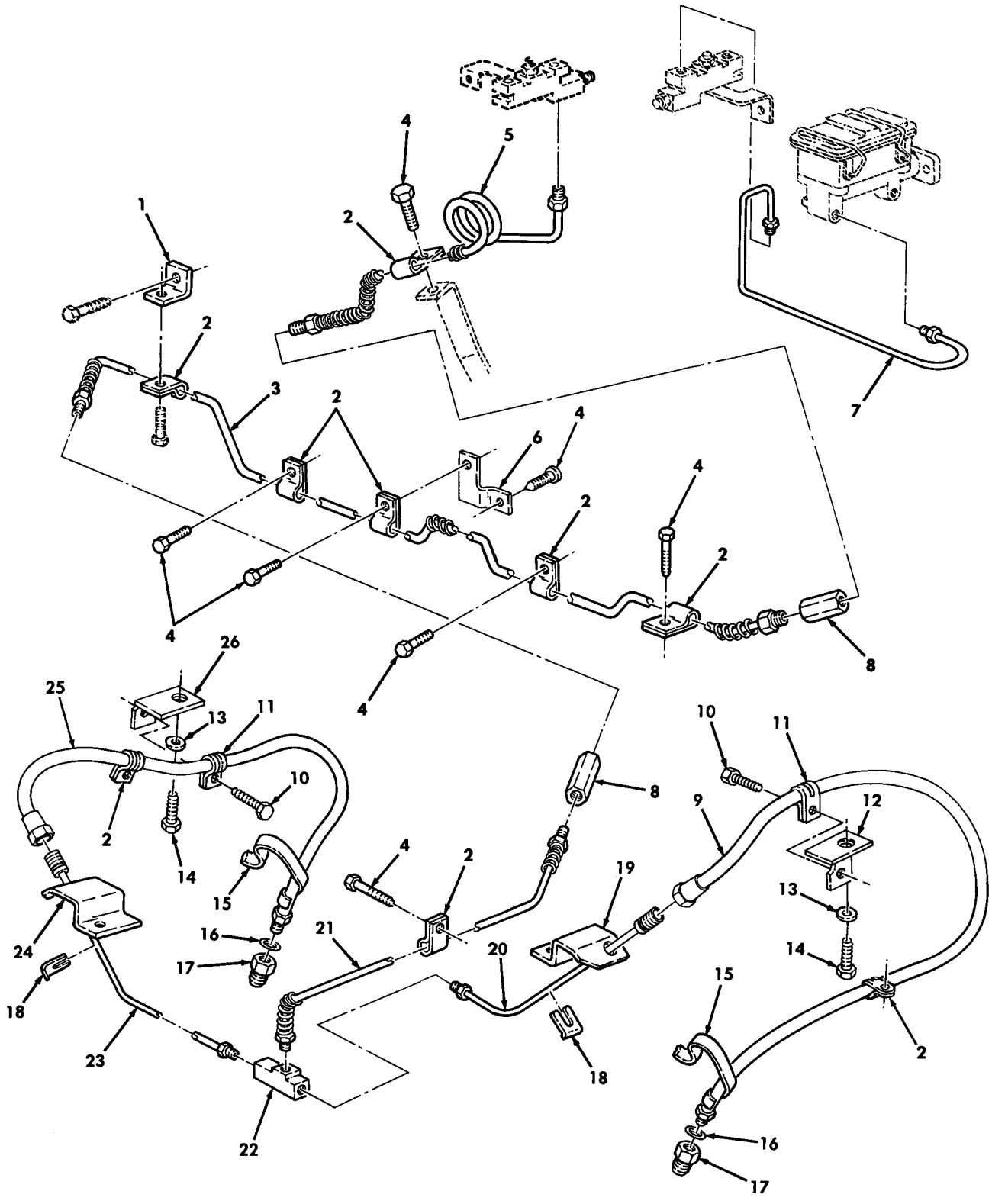

Figure 127. Rear Brake Lines and Fittings (Serial Number 299999 and Below).

(1) ITEM NO	(2) SMR CODE	(3) NSN	(4) CAGEC	(5) PART NUMBER	(6) DESCRIPTION AND USABLE ON CODES(UOC)	(7) QTY
					GROUP 1204 HYDRAULIC BRAKE SYSTEM	
					FIG. 127 REAR BRAKE LINES AND FITTINGS(SERIAL NUMBER 299999 AND BELOW)	
1	PFOZZ	5340012097796	19207	12338302	BRACKET,ANGLE.....	1
2	PAOZZ	5340011897640	7X677	179148	CLAMP,LOOP.....	9
3	PAOZZ	4710014138230	34623	12447166	TUBE ASSEMBLY,METAL.....	1
4	PAOZZ	5305000518605	80205	MS16995-77	SCREW,CAP,SOCKET HE 3/8-16 X 1/2...	7
5	PAOZZ	4710011869620	34623	5584900	TUBE ASSEMBLY,METAL.....	1
6	PAOZZ	5340014120867	19207	12447165	BRACKET,MOUNTING.....	1
7	PAOZZ	4710013579968	19207	12342901	TUBE ASSEMBLY,METAL.....	1
8	PAOZZ	4730014570727	72582	442393	COUPLING,HOSE.....	2
9	PAOZZ	4720014433481	19207	12460512	HOSE ASSEMBLY,NONME L.H.....	1
10	PAOZZ	5305013936311	24617	271153	SCREW,TAPPING.....	2
11	PAOZZ	5340000573043	96906	MS21333-112	CLAMP,LOOP.....	2
12	PAOZZ	5340014587156	34623	EX4717-1	BRACKET,ANGLE L.H.....	1
13	PAOZZ	5310000814219	96906	MS27183-12	WASHER,FLAT 5/16.....	2
14	PAOZZ	5306002264828	80204	B1821BH031C113N	BOLT,MACHINE 5/16-18 X 1.25.....	2
15	MOOZZ		81349	B47287-II-1/2-27	TUBING,PLASTIC,SPIR MAKE FROM TUBING,P/N B47287-II-1/2,27 INCHES LONG.....	2
16	PAOZZ	5310011898476	34623	5582366	WASHER,FLAT 25/64.....	2
17	PAOZZ	4730011846971	34623	12339235	COUPLING,TUBE.....	2
18	PAOZZ	5342006781753	19207	7331407	CLIP,HAND BRAKE CAB.....	2
19	PAOZZ	5340014328681	34623	EC12460241B1	BRACKET,MULTIPLE AN.....	1
20	PAOZZ	4710014343151	19207	12460269-1	TUBE ASSEMBLY,METAL L.H.....	1
21	PAOZZ	4710014343159	19207	12460267	TUBE ASSEMBLY,METAL.....	1
22	PAOZZ	4730002871706	7X677	178654	TEE,TUBE.....	1
23	PAOZZ	4710014727011	19207	12460269-2	TUBE ASSEMBLY,METAL R.H.....	1
24	PAOZZ	5340014348109	34623	EX4228-2	BRACKET,MULTIPLE AN.....	1
25	PAOZZ	4720014438487	34623	12460511	HOSE ASSEMBLY,NONME R.H.....	1
26	PAOZZ	5340014587147	34623	EX4717-2	BRACKET,ANGLE R.H.....	1

END OF FIGURE

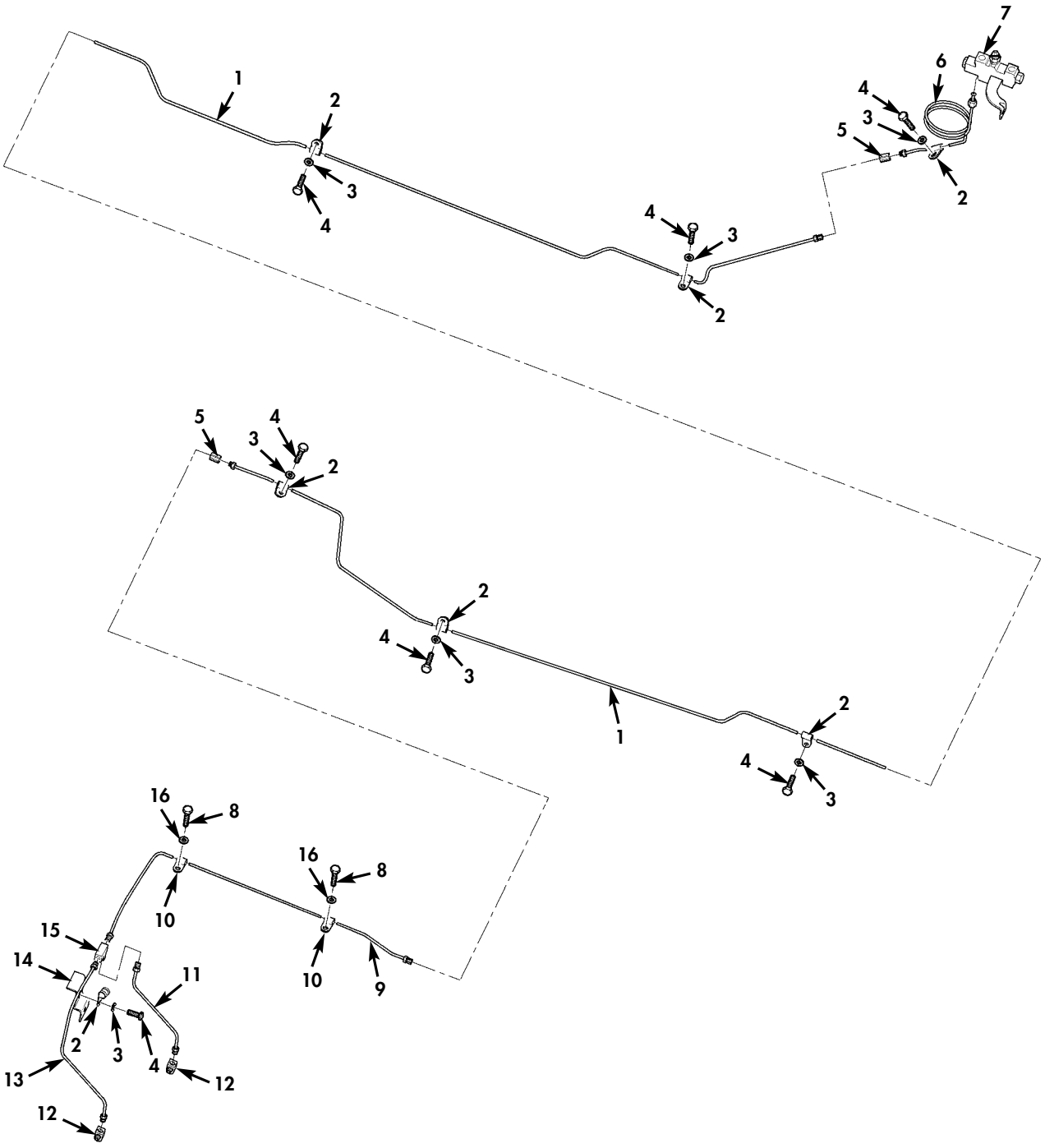

Figure 127A. Rear Brake Lines and Fittings (Serial Number 300000 and Above).

(1) ITEM NO	(2) SMR CODE	(3) NSN	(4) CAGEC	(5) PART NUMBER	(6) DESCRIPTION AND USABLE ON CODES(UOC)	(7) QTY
					GROUP 1204 HYDRAULIC BRAKE SYSTEM	
					FIG. 127A REAR BRAKE LINES AND FITTINGS(SERIAL NUMBER 300000 AND ABOVE)	
* 1	PAOZZ	4710015659718	34623	6044065	TUBE,ASSEMBLY,METAL..... UOC:TTA,TTT,TT1,UUA,UUU,UU1,UU2	1
* 2	PAOZZ	5340009546014	80205	MS21333-121	CLAMP,LOOP..... UOC:TTA,TTT,TT1,UUA,UUU,UU1,UU2	7
* 3	PAOZZ	5310014124013	24617	2436163	WASHER,FLAT 3/8..... UOC:TTA,TTT,TT1,UUA,UUU,UU1,UU2	7
* 4	PAOZZ	5305013936311	24617	271153	SCREW,TAPPING 3/8-16 X 5/8..... UOC:TTA,TTT,TT1,UUA,UUU,UU1,UU2	7
* 5	PAOZZ	4730014570727	24617	442393	COUPLING,HOSE..... UOC:TTA,TTT,TT1,UUA,UUU,UU1,UU2	2
* 6	PAOZZ	4710015659242	34623	6041617	TUBE ASSEMBLY,METAL..... UOC:TTA,TTT,TT1,UUA,UUU,UU1,UU2	1
* 7	PAOZZ	4820011860822	34281	109413-01	VALVE,REGULATING,FL..... UOC:TTA,TTT,TT1,UUA,UUU,UU1,UU2	1
* 8	PAOZZ	5305012068401	11862	448655	SCREW,TAPPING 1/4-28 X 1/2..... UOC:TTA,TTT,TT1,UUA,UUU,UU1,UU2	2
* 9	PAOZZ	4710015657558	34623	6031742	TUBE ASSEMBLY,METAL L.H..... UOC:TTA,TTT,TT1,UUA,UUU,UU1,UU2	1
* 10	PAOZZ	5340008278314	96906	MS21333-33	CLAMP,LOOP..... UOC:TTA,TTT,TT1,UUA,UUU,UU1,UU2	2
* 11	PAOZZ	4710015659639	34623	6042585	TUBE ASSEMBLY,METAL MIDDLE..... UOC:TTA,TTT,TT1,UUA,UUU,UU1,UU2	1
* 12	PAOZZ	4730011991878	01276	402X3	ELBOW,PIPE..... UOC:TTA,TTT,TT1,UUA,UUU,UU1,UU2	2
* 13	PAOZZ	4710015659736	34623	6042578	TUBE ASSEMBLY,METAL R.H..... UOC:TTA,TTT,TT1,UUA,UUU,UU1,UU2	1
* 14	PAOZZ	2590015663923	34623	6042487	BRACKET,VEHICULAR C..... UOC:TTA,TTT,TT1,UUA,UUU,UU1,UU2	1
* 15	PAOZZ	4730002871706	7X677	178654	TEE,TUBE..... UOC:TTA,TTT,TT1,UUA,UUU,UU1,UU2	1
* 16	PAOZZ	5310008094058	96906	MS27183-10	WASHER,FLAT 1/4..... UOC:TTA,TTT,TT1,UUA,UUU,UU1,UU2	2

END OF FIGURE

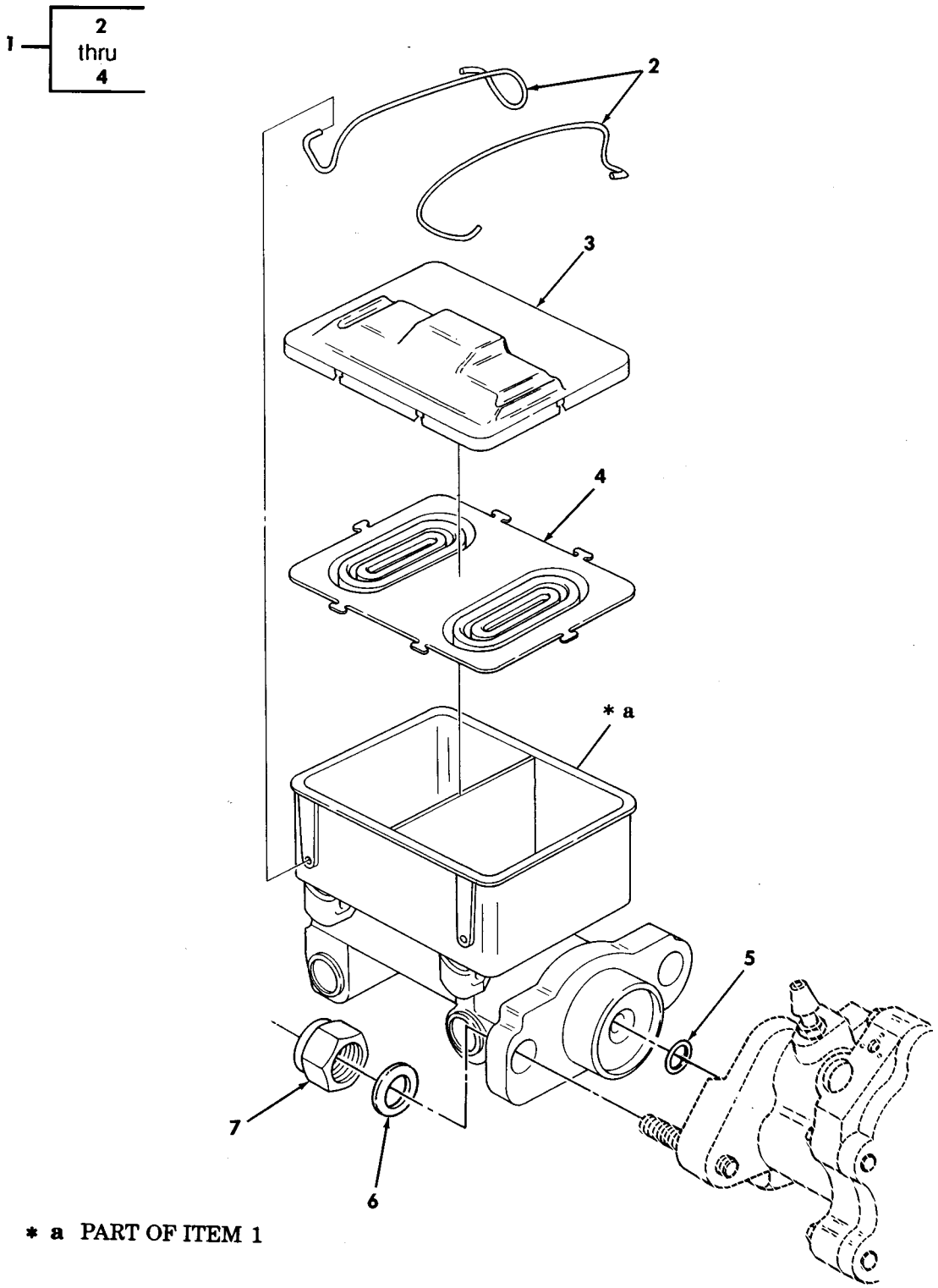

Figure 128. Master Cylinder Assembly (Serial Number 299999 and Below).

(1) ITEM NO	(2) SMR CODE	(3) NSN	(4) CAGEC	(5) PART NUMBER	(6) DESCRIPTION AND USABLE ON CODES(UOC)	(7) QTY
					GROUP 1204 HYDRAULIC BRAKE SYSTEM	
					FIG. 128 MASTER CYLINDER ASSEMBLY (SERIAL NUMBER 299999 AND BELOW)	
1	PAOOO	2530013579776	34623	12342898	CYLINDER ASSEMBLY,H.....	1
2	PAOZA	5340014586386	0GE52	2227677	.CLIP,RETAINING.....	2
3	PAOZZ	5340014562751	0GE52	2227346	.COVER,PROTECTIVE,DU.....	1
4	PAOZZ	2530014595890	0GE52	2228633	.DIAPHRAGM,MASTER CY.....	1
5	PAOZZ	5331001716649	96906	MS28775-223	O-RING.....	1
6	PAOZZ	5310000806004	96906	MS27183-14	WASHER,FLAT 3/8.....	1
7	PAOZZ	5310011552503	7X677	11514603	NUT,PLAIN,HEXAGON 3/8-16.....	1

END OF FIGURE

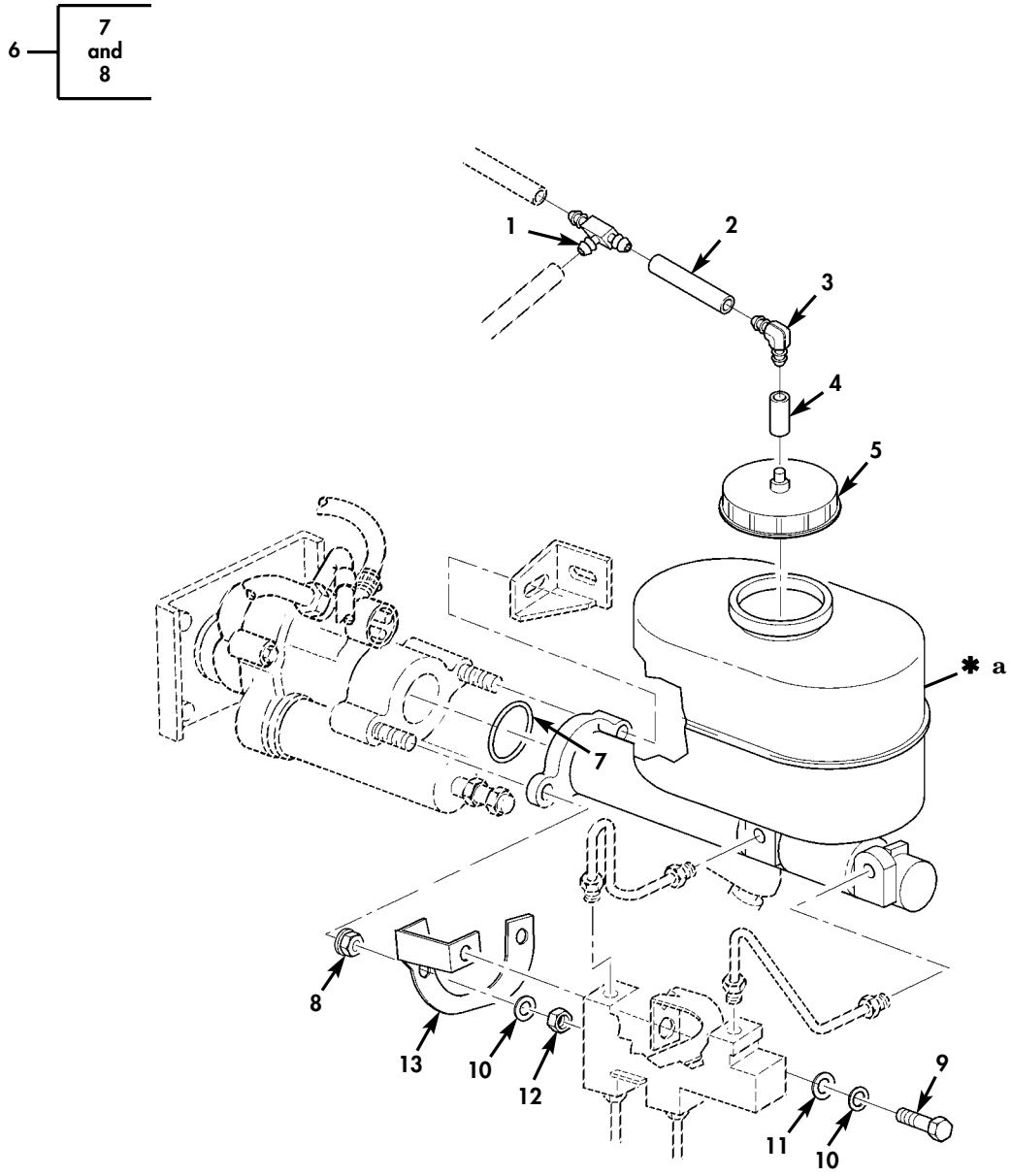

✱ **a** PART OF ITEM 6

Figure 128A. Hydro-boost Master Cylinder (Serial Number 300000 and Above).

(1) ITEM NO	(2) SMR CODE	(3) NSN	(4) CAGEC	(5) PART NUMBER	(6) DESCRIPTION AND USABLE ON CODES(UOC)	(7) QTY
					GROUP 1204 HYDRAULIC BRAKE SYSTEM	
					FIG. 128A HYDRO-BOOST MASTER CYLINDER (SERIAL NUMBER 300000 AND ABOVE)	
* 1	PAOZZ	4730010035105	93061	224-4-4-5/32	TEE,HOSE..... UOC:TTA,TTT,TT1,UUA,UUU,UU1,UU2	1
* 2	MOOZZ		19207	CPR104420-1-3IN	TUBE MAKE FROM TUBING,NONMETALLIC P/N CPR104420-1,3 INCHES LONG..... UOC:TTA,TTT,TT1,UUA,UUU,UU1,UU2	1
* 3	PAOZZ	4730015458308	19207	12339979-1	ELBOW,HOSE..... UOC:TTA,TTT,TT1,UUA,UUU,UU1,UU2	1
* 4	MOOZZ		19207	CPR104420-1-1IN	TUBING,NONMETALLIC MAKE FROM TUBING NONMETALLIC P/N CPR104420-1,1 INCH LONG..... UOC:TTA,TTT,TT1,UUA,UUU,UU1,UU2	1
* 5	PAOZZ	2590015660122	34623	6014240	CAP,FILLER OPENING..... UOC:TTA,TTT,TT1,UUA,UUU,UU1,UU2	1
* 6	PAOZZ	2530015685097	53867	02040C2315	CYLINDER ASSEMBLY,H HYDRAULIC BRAKE,MASTER CYLINDER..... UOC:TTA,TTT,TT1,UUA,UUU,UU1,UU2	1
* 7	PCOZZ	5331001716649	81343	MS28775-223	.O-RING..... UOC:TTA,TTT,TT1,UUA,UUU,UU1,UU2	1
* 8	PFOZZ	5310015657569	53867	2770827	.NUT,PLAIN EXTENDED W 3/8-16..... UOC:TTA,TTT,TT1,UUA,UUU,UU1,UU2	2
* 9	PAOZZ	5305000680510	80204	B1821BH038C100N	SCREW,CAP,HEXAGON H 3/8-16 X 1.00.. UOC:TTA,TTT,TT1,UUA,UUU,UU1,UU2	1
* 10	PAOZZ	5310000045033	80205	MS35338-46	WASHER,LOCK 3/8..... UOC:TTA,TTT,TT1,UUA,UUU,UU1,UU2	3
* 11	PAOZZ	5310014124013	24617	2436163	WASHER,FLAT 3/8..... UOC:TTA,TTT,TT1,UUA,UUU,UU1,UU2	1
* 12	PAOZZ	5310009359021	96906	MS51943-35	NUT,SELF-LOCKING,HE 3/8-16..... UOC:TTA,TTT,TT1,UUA,UUU,UU1,UU2	2
* 13	PAOZZ	2590015661785	34623	6036851	BRACKET,VEHICULAR C..... UOC:TTA,TTT,TT1,UUA,UUU,UU1,UU2	1

END OF FIGURE

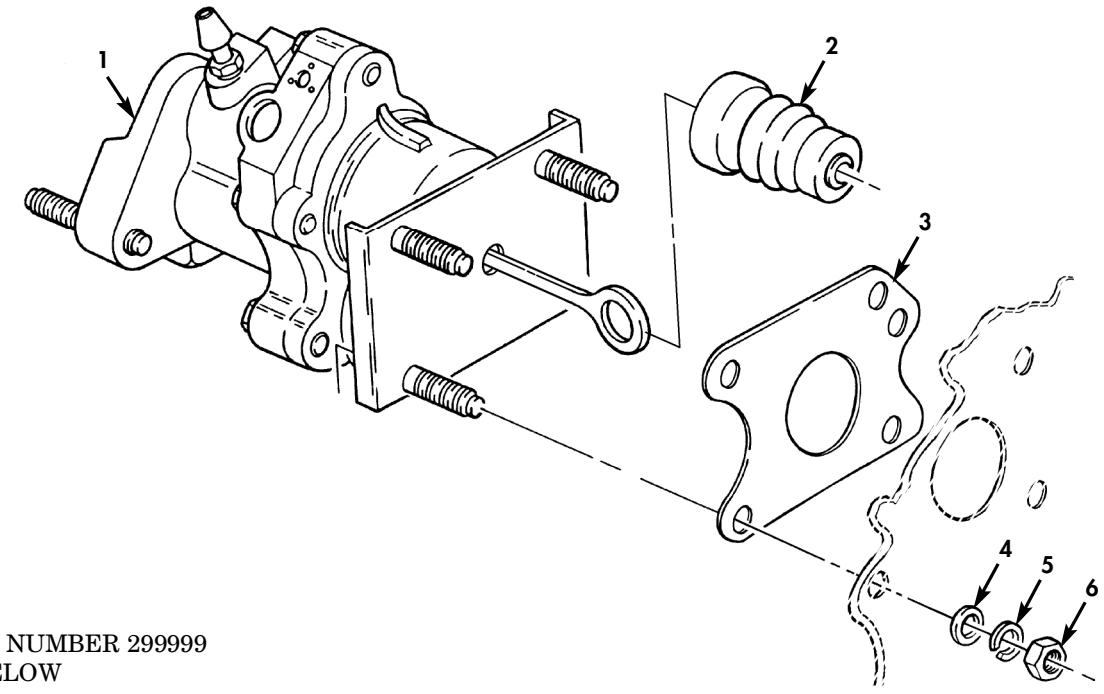

SERIAL NUMBER 299999
AND BELOW

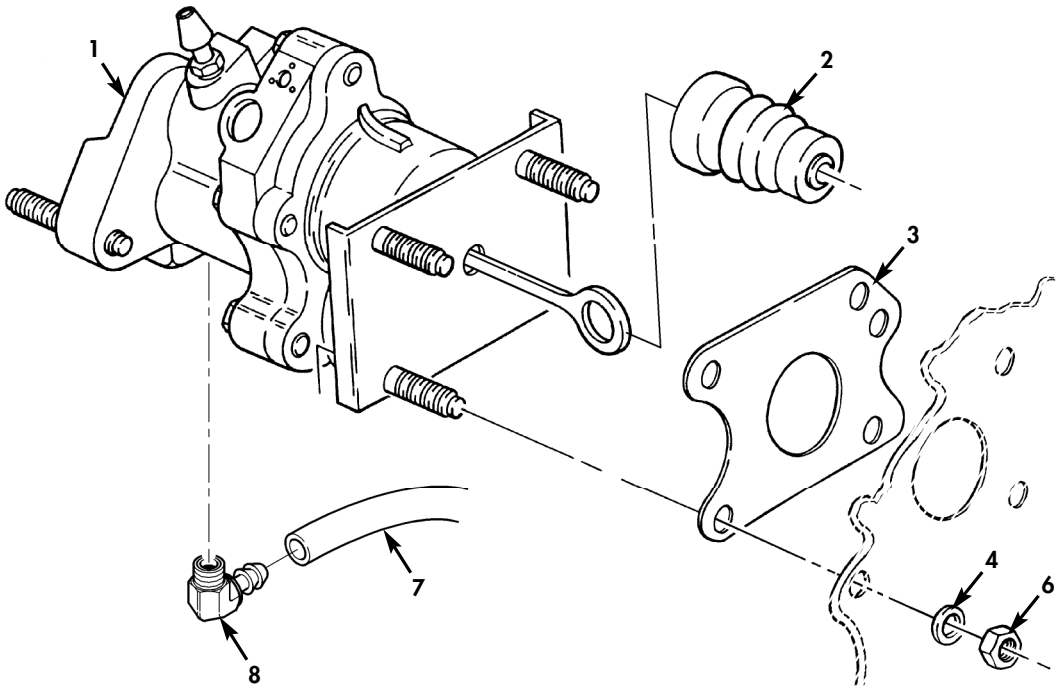

SERIAL NUMBER 300000
AND ABOVE

Figure 129. Hydro-boost.

(1) ITEM NO	(2) SMR CODE	(3) NSN	(4) CAGEC	(5) PART NUMBER	(6) DESCRIPTION AND USABLE ON CODES(UOC)	(7) QTY
					GROUP 1205 VACUUM SYSTEM COMPONENTS	
					FIG. 129 HYDRO-BOOST	
* 1	PAOZZ	2530013579708	34623	0 204 022 603	BRAKE BOOSTER ASSEM SERIAL NUMBER 299999 AND BELOW..... UOC:TTA,TTT,UUA,UUU,UU1,UU2,XXA,XXB	1
* 1	PAOZZ	2530015662481	53867	02040C2314	BRAKE BOOSTER ASSEM SERIAL NUMBER 300000 AND ABOVE..... UOC:TTA,TTT,TT1,UUA,UUU,UU1,UU2	1
* 2	PAOZZ		53867	BX2771145	BOOT,DUST,AND MOIST.....	1
* 3	PAOZZ	5330015601552	53867	BX129860	GASKET.....	1
* 4	PAOZZ	5310012552704	19207	7982843	WASHER,FLAT SERIAL NUMBER 299999 AND BELOW..... UOC:TTA,TTT,UUA,UUU,UU1,UU2,XXA,XXB	4
* 4	PAOZZ	5310011191024	24617	2436162	WASHER,FLAT 3/8 SERIAL NUMBER 300000 AND ABOVE..... UOC:TTA,TTT,TT1,UUA,UUU,UU1,UU2	4
* 5	PAOZZ	5310006379541	80205	MS35338-46	WASHER,LOCK 3/8 SERIAL NUMBER 299999 AND BELOW..... UOC:TTA,TTT,UUA,UUU,UU1,UU2,XXA,XXB	4
* 6	PAOZZ	5310009359021	96906	MS51943-35	NUT,SELF-LOCKING,HE 3/8-16.....	4
* 7	MOOZZ		19207	CPR104420-1-15	TUBING,NONMETALLIC MAKE FROM TUBE P/N CPR104420-1,15 INCHES LONG SERIAL NUMBER 300000 AND ABOVE..... UOC:TTA,TTT,TT1,UUA,UUU,UU1,UU2	1
* 8	PAOZZ	4730011953803	19207	12339964-2	ELBOW,PIPE TO HOSE SERIAL NUMBER 300000 AND ABOVE..... UOC:TTA,TTT,TT1,UUA,UUU,UU1,UU2	1

END OF FIGURE

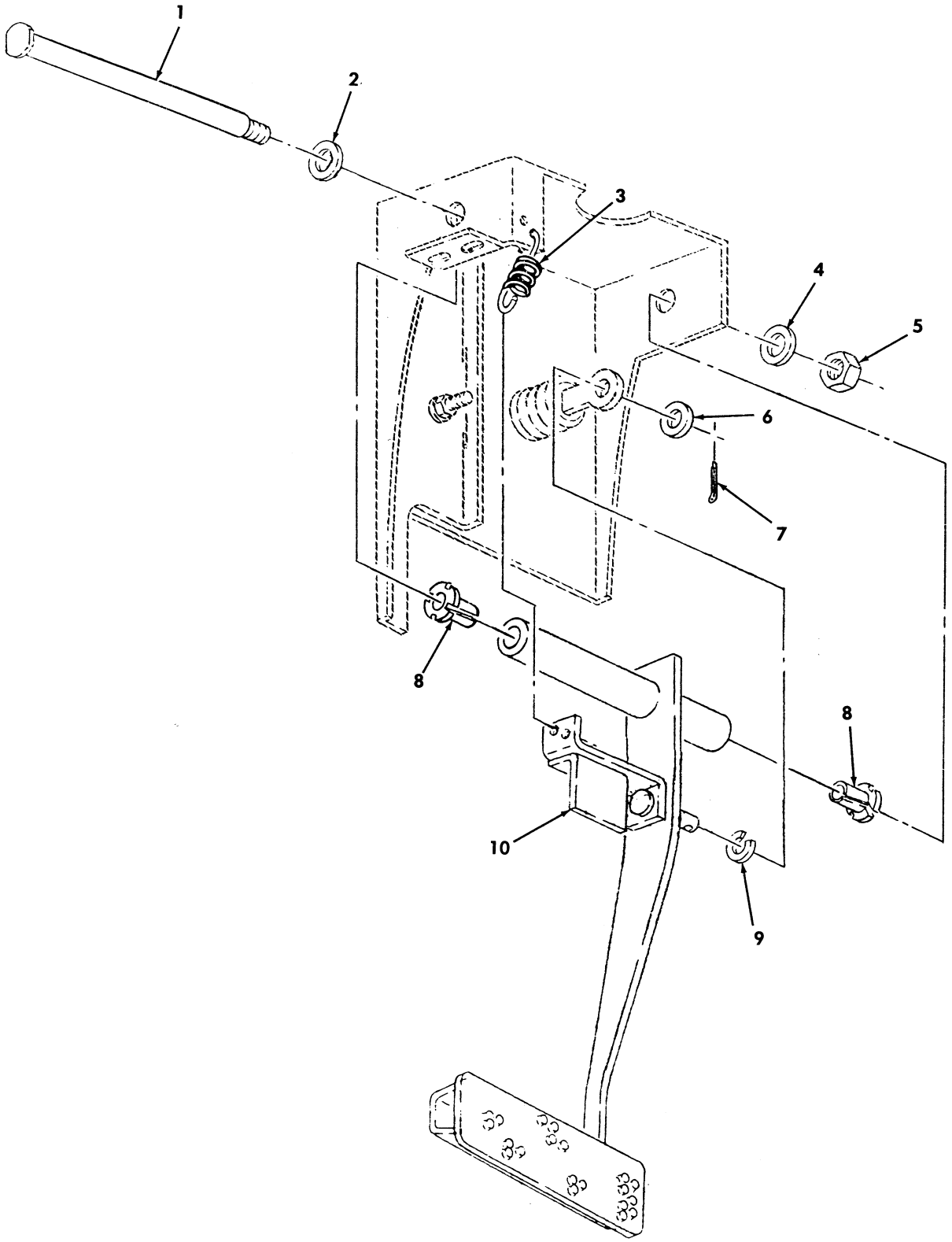

Figure 130. Service Brake Pedal Assembly.

(1) ITEM NO	(2) SMR CODE	(3) NSN	(4) CAGEC	(5) PART NUMBER	(6) DESCRIPTION AND USABLE ON CODES(UOC)	(7) QTY
					GROUP 1206 MECHANICAL BRAKE SYSTEM	
					FIG. 130 SERVICE BRAKE PEDAL ASSEMBLY	
1	PAOZZ	5315011858781	19207	12339114	PIN,SHOULDER,HEADED.....	1
2	PAOZZ	5310012604839	34623	5593312	WASHER,FLAT 3/4.....	1
3	PAOZZ	5360011864845	34623	5578667	SPRING,HELICAL,EXTE.....	1
4	PAOZZ	5310000685285	96906	MS27183-20	WASHER,FLAT 9/16.....	1
5	PAOZZ	5310007638919	96906	MS51967-18	NUT,PLAIN,HEXAGON 9/16-12.....	1
6	PAOZZ	5310008095998	96906	MS27183-18	WASHER,FLAT 1/2.....	1
7	PAOZZ	5315008161794	00198	PK379	PIN,COTTER 3/32 X 1.00.....	1
8	PAOZZ	3120004851017	96881	12L18F	BEARING,SLEEVE.....	2
* 9	PAOZZ	5310014132049	19207	12338124	WASHER,SPRING TENSI 1/2.....	1
10	PAOZZ	2540014113946	19207	12447078	PEDAL,CONTROL..... UOC:XAA,UUU	1
* 10	PAOZZ	2540014233199	34623	RCSK17649	PEDAL,CONTROL..... UOC:XBB,TTT	1

END OF FIGURE

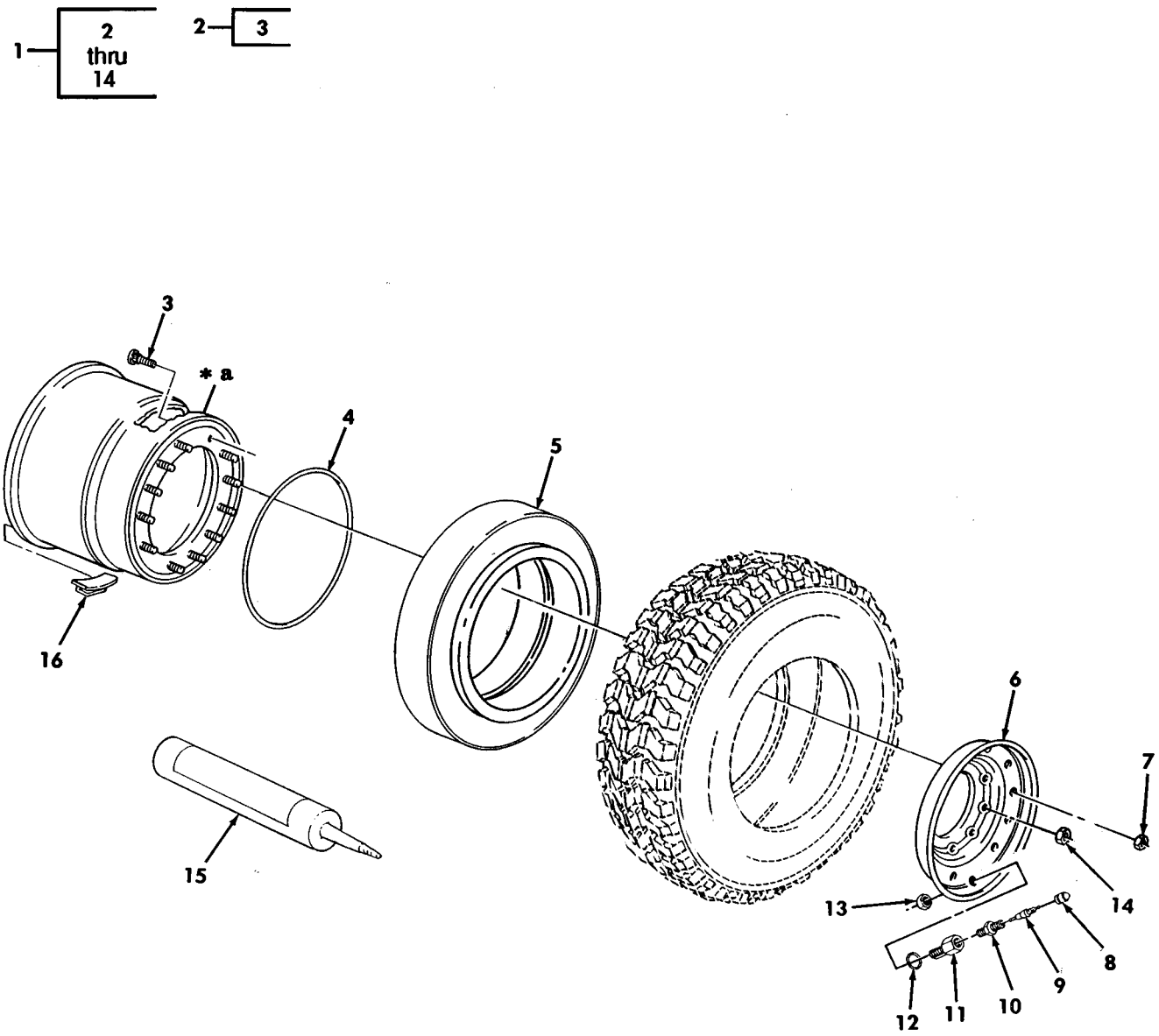

* a PART OF ITEM 2

Figure 131. Wheel and Runflat Assembly, MT Tire (Serial Number 246889 and Below).

(1) ITEM NO	(2) SMR CODE	(3) NSN	(4) CAGEC	(5) PART NUMBER	(6) DESCRIPTION AND USABLE ON CODES(UOC)	(7) QTY
					GROUP 13 WHEEL AND TRACKS	
					1311 WHEEL ASSEMBLY	
					FIG. 131 WHEEL AND RUNFLAT ASSEMBLY,MT TIRE(SERIAL NUMBER 246889 AND BELOW)	
1	PCOHH	2530014935859	19207	12460176	WHEEL AND RUNFLAT,A COMES WITH RADIAL TIRE ONLY.....	4
2	PAOOO	2530014174908	41885	91427EBKBC	.RIM,WHEEL,PNEUMATI.....	1
3	PAOZZ	5306014172467	41885	X91430	..BOLT,RIBBED NECK 1/2-20 X 2.12...	12
4	PAOZZ	5331014171043	41885	91610	.O-RING.....	1
5	PAOZZ	2640014196202	62161	VF0010	.RUNFLAT,INSERT.....	1
6	PAOZZ	2530014178450	41885	91428EBKBC	.RIM,WHEEL,PNEUMATI.....	1
7	PAOZZ	5310011987585	19207	12339501	.NUT,SELF-LOCKING,HE 1/2-20 PART OF KIT P/N 57K3527.....	12
8	PAOZZ	2640010982029	81348	TYIV/CL1/TRVC8	.CAP,PNEUMATIC VALVE USE WITH RADIAL TIRE ONLY PART OF KIT P/N 57K0297.....	1
9	PAOZZ	2640000501229	81348	TYV/CL2/TR C1	.VALVE CORE USE WITH RADIAL TIRE ONLY PART OF KIT P/N 57K0297 PART OF KIT P/N 57K3527.....	1
10	PAOZZ	2640013354583	19207	12342634	.VALVE,PNEUMATIC TIR USE WITH RADIAL TIRE ONLY PART OF KIT P/N 57K0297 PART OF KIT P/N 57K3527.....	1
11	PAOZZ	4730013461063	41885	90619	.ADAPTER,STRAIGHT,PI USE WITH RADIAL TIRE ONLY PART OF KIT P/N 57K0297 PART OF KIT P/N 57K3527.....	1
12	PAOZZ	5331013463806	19207	12342794	.O-RING USE WITH RADIAL TIRE ONLY PART OF KIT P/N 57K0297 PART OF KIT P/N 57K3527.....	1
13	PAOZZ	5310004492376	96906	MS21245-8	.NUT,SELF-LOCKING,HE 1/2-20,USE WITH RADIAL TIRE ONLY PART OF KIT P/N 57K0297 PART OF KIT P/N 57K3527.	1
14	PAOZZ	5310010219027	7X677	1567442	.NUT,PLAIN,CONE SEAT.....	1
15	PAOZZ	2640014196200	62161	D528235-H1	LUBRICANT,RUNFLAT USE WITH RADIAL TIRE ONLY.....	1
15	PAOZZ	2640014575552	62161	D528235-B	LUBRICANT,RUNFLAT 455 GAL DRUM.....	1
16	PAOZZ	6670012616844	34623	5595966	WEIGHT,BALANCE CLIP ON,1/2 OUNCE...	V
16	PAOZZ	2530008484581	9G287	P-100	WEIGHT,WHEEL BALANC CLIP ON,1 OUNCE	V
16	PAOZZ	6670012616845	34623	5595968	WEIGHT,BALANCE CLIP ON,1-1/2 OUNCE.	V
16	PAOZZ	6670012616846	34623	5595969	WEIGHT,BALANCE CLIP ON,2 OUNCE.....	V
16	PAOZZ	6670012628646	34623	5595970	WEIGHT,BALANCE CLIP ON,2-1/2 OUNCE.	V
16	PAOZZ	6670012618011	34623	5595971	WEIGHT,BALANCE CLIP ON,3 OUNCE.....	V
16	PAOZZ	6670012618012	34623	5595972	WEIGHT,BALANCE CLIP ON,3-1/2 ONCE..	V
16	PAOZZ	6670012618013	34623	5595973	WEIGHT,BALANCE CLIP ON,4 OUNCE.....	V
16	PAOZZ	6670012616847	9G287	P-450	WEIGHT,BALANCE CLIP ON,4-1/2 OUNCE.	V
16	PAOZZ	6670012628647	9G287	P-500	WEIGHT,BALANCE CLIP ON,5 OUNCE.....	V
16	PAOZZ	6670012632268	9G287	P-550	WEIGHT,BALANCE CLIP ON 5-1/2 OUNCE.	V
16	PAOZZ	2530012358688	34623	5593926	WEIGHT,WHEEL BALANC CLIP ON,6 OUNCE	V

END OF FIGURE

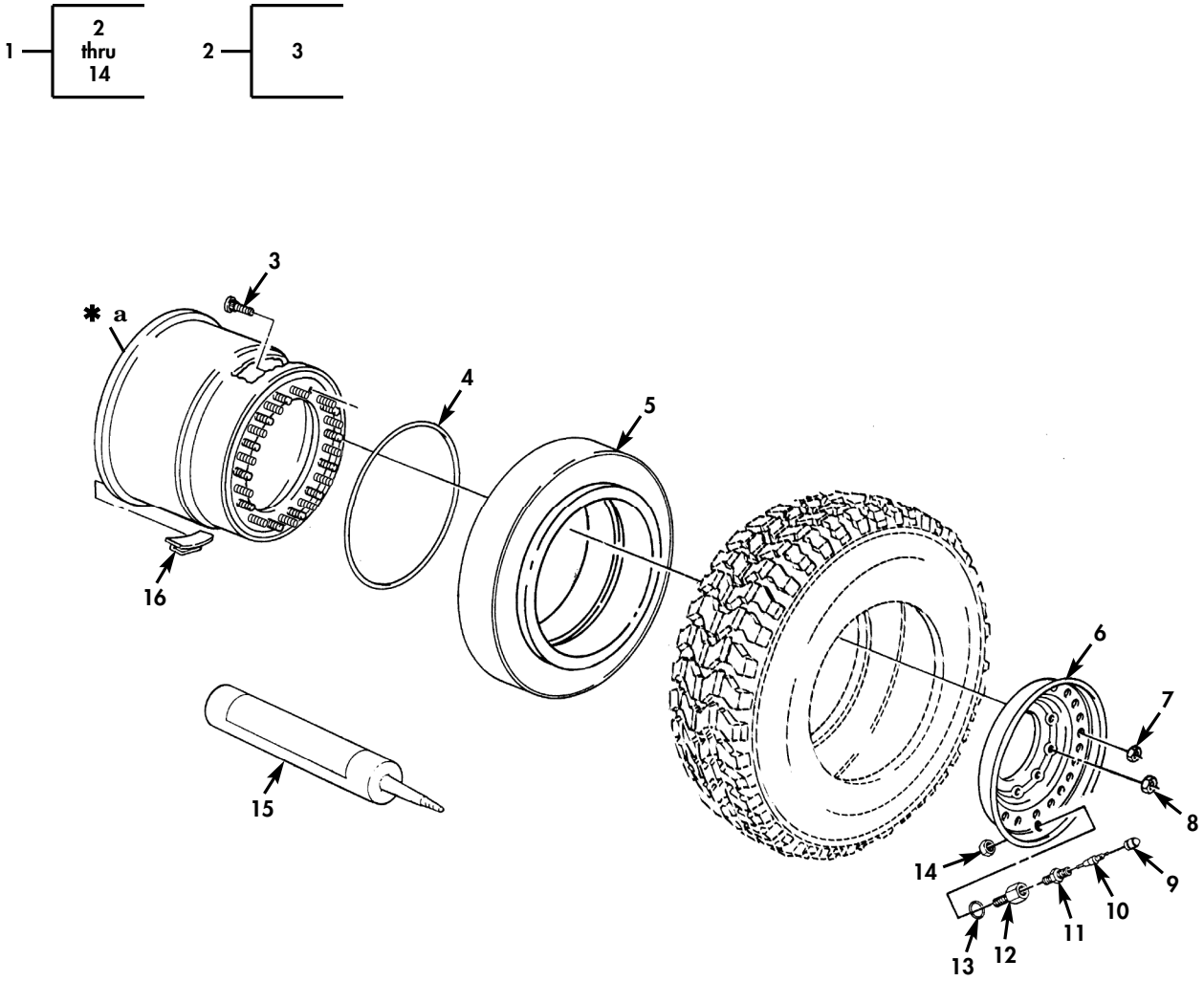

✱ **a** PART OF ITEM 2

Figure 131A. Wheel and Runflat Assembly, Load Range D and E (24 Bolt Wheel) (Serial Number 246890 and Above).

(1) ITEM NO	(2) SMR CODE	(3) NSN	(4) CAGEC	(5) PART NUMBER	(6) DESCRIPTION AND USABLE ON CODES(UOC)	(7) QTY
					GROUP 1311 WHEEL ASSEMBLY	
					FIG. 131A WHEEL AND RUNFLAT ASSEMBLY, LOAD RANGE D AND E (24 BOLT WHEEL) (SERIAL NUMBER 246890 AND ABOVE)	
* 1	PCOHH	2530015582138	19207	12506927	WHEEL,PNEUMATIC TIR COMES WITH MTR LOAD RANGE D TIRE ONLY..... UOC:TTA,TTT,TT1,UUA,UUU,UU1,UU2	4
* 1	PCOHH	2530015638620	19207	12518557	WHEEL,PNEUMATIC TIR COMES WITH MTR LOAD RANGE E TIRE ONLY..... UOC:TTA,TTT,TT1,UUA,UUU,UU1,UU2	4
* 2	PAOZZ	2530015583027	1S0RS	19026	.RIM,WHEEL,PNEUMATIC TIRE,INNER LOAD RANGE D..... UOC:TTA,TTT,TT1,UUA,UUU,UU1,UU2	1
* 2	PAOZZ	2530015626049	1S0RS	17045	.RIM,WHEEL,PNEUMATIC TIRE,INNER LOAD RANGE E..... UOC:TTA,TTT,TT1,UUA,UUU,UU1,UU2	1
* 3	PAOZZ	5306014172467	41885	X91430	..BOLT,RIBBED NECK 1/2-20 X 2.120.. UOC:TTA,TTT,TT1,UUA,UUU,UU1,UU2	24
* 4	PAOZZ	5331014171043	41885	91610	.O-RING..... UOC:TTA,TTT,TT1,UUA,UUU,UU1,UU2	1
* 5	PCOZZ	2640014196202	19207	12342638-1	.RUN-FLAT KIT,INSERT..... UOC:TTA,TTT,TT1,UUA,UUU,UU1,UU2	1
* 6	PAOZZ	2530015583061	1S0RS	18069	.RIM,WHEEL,PNEUMATIC TIRE,OUTER.... UOC:TTA,TTT,TT1,UUA,UUU,UU1,UU2	1
* 6	PAOZZ	2530015626058	1S0RS	18109	.RIM,WHEEL,PNEUMATIC TIRE,OUTER.... UOC:TTA,TTT,TT1,UUA,UUU,UU1,UU2	1
* 7	PAOZZ	5310011987585	19207	12339501	.NUT,SELF-LOCKING,HE 1/2-20..... UOC:TTA,TTT,TT1,UUA,UUU,UU1,UU2	24
* 8	PAOZZ	5310010219027	7X677	1567442	.NUT,PLAIN,CONE SEAT 1/2-18..... UOC:TTA,TTT,TT1,UUA,UUU,UU1,UU2	8
* 9	PAOZZ	2640010982029	63900	A-100-VC-8	.CAP,PNEUMATIC VALVE..... UOC:TTA,TTT,TT1,UUA,UUU,UU1,UU2	1
* 10	PAOZZ	2640000501229	39BV2	100-AA	.VALVE CORE..... UOC:TTA,TTT,TT1,UUA,UUU,UU1,UU2	1
* 11	PAOZZ	2640013354583	63900	12342634	.VALVE,PNEUMATIC TIR..... UOC:TTA,TTT,TT1,UUA,UUU,UU1,UU2	1
* 12	PAOZZ	4730013461063	41885	90619D	.ADAPTER,STRAIGHT,PI..... UOC:TTA,TTT,TT1,UUA,UUU,UU1,UU2	1
* 13	PCOZZ	5331013463806	19207	12342794	.O-RING..... UOC:TTA,TTT,TT1,UUA,UUU,UU1,UU2	1
* 14	PAOZZ	5310004492376	80205	MS21245-8	.NUT,SELF-LOCKING,HE 1/2-20..... UOC:TTA,TTT,TT1,UUA,UUU,UU1,UU2	1
* 15	PCOZZ	2640014196200	19207	D528235-H1	LUBRICANT,RUNFLAT 11OZ TUBE..... UOC:TTA,TTT,TT1,UUA,UUU,UU1,UU2	1
* 15	PCOZZ	2640014575552	62161	D528235-B	LUBRICANT,RUNFLAT 55 GALLON DRUM... UOC:TTA,TTT,TT1,UUA,UUU,UU1,UU2	1
* 16	PAOZZ	2530012616844	9G287	P-050	WEIGHT,WHEEL BALANC CLIP ON,1/2 OUNCE..... UOC:TTA,TTT,TT1,UUA,UUU,UU1,UU2	V
* 16	PAOZZ	2530008484581	9G287	P-100	WEIGHT,WHEEL BALANC CLIP ON,1 OUNCE UOC:TTA,TTT,TT1,UUA,UUU,UU1,UU2	V
* 16	PAOZZ	2530012616845	9G287	P-150	WEIGHT,WHEEL BALANC CLIP ON 1-1/2 OUNCE..... UOC:TTA,TTT,TT1,UUA,UUU,UU1,UU2	V

(1) ITEM NO	(2) SMR CODE	(3) NSN	(4) CAGEC	(5) PART NUMBER	(6) DESCRIPTION AND USABLE ON CODES(UOC)	(7) QTY
* 16	PAOZZ	2530012616846	9G287	P-200	WEIGHT,BALANCE CLIP ON,2 OUNCE..... UOC:TTA,TTT,TT1,UUA,UUU,UU1,UU2	V
* 16	PAOZZ	2530012628646	9G287	P-250	WEIGHT,WHEEL BALANC CLIP ON 2-1/2 OUNCE..... UOC:TTA,TTT,TT1,UUA,UUU,UU1,UU2	V
* 16	PAOZZ	2530012618011	97789	27-300	WEIGHT,WHEEL BALANC CLIP ON,3 OUNCE UOC:TTA,TTT,TT1,UUA,UUU,UU1,UU2	V
* 16	PAOZZ	2530012618012	34623	5595972	WEIGHT,WHEEL BALANC CLIP ON,3-1/2 ONCE..... UOC:TTA,TTT,TT1,UUA,UUU,UU1,UU2	V
* 16	PAOZZ	2530012618013	9G287	P-400	WEIGHT,WHEEL BALANC CLIP ON,4 OUNCE UOC:TTA,TTT,TT1,UUA,UUU,UU1,UU2	V
* 16	PAOZZ	2530012628647	9G287	P-500	WEIGHT,WHEEL BALANC CLIP ON,5 OUNCE UOC:TTA,TTT,TT1,UUA,UUU,UU1,UU2	V
* 16	PAOZZ	2530012632268	9G287	P-550	WEIGHT,WHEEL BALANC CLIP ON,5-1/2 OUNCE..... UOC:TTA,TTT,TT1,UUA,UUU,UU1,UU2	V
* 16	PAOZZ	2530012358688	34623	5593926	WEIGHT,WHEEL BALANC CLIP ON,6 OUNCE UOC:TTA,TTT,TT1,UUA,UUU,UU1,UU2	V

END OF FIGURE

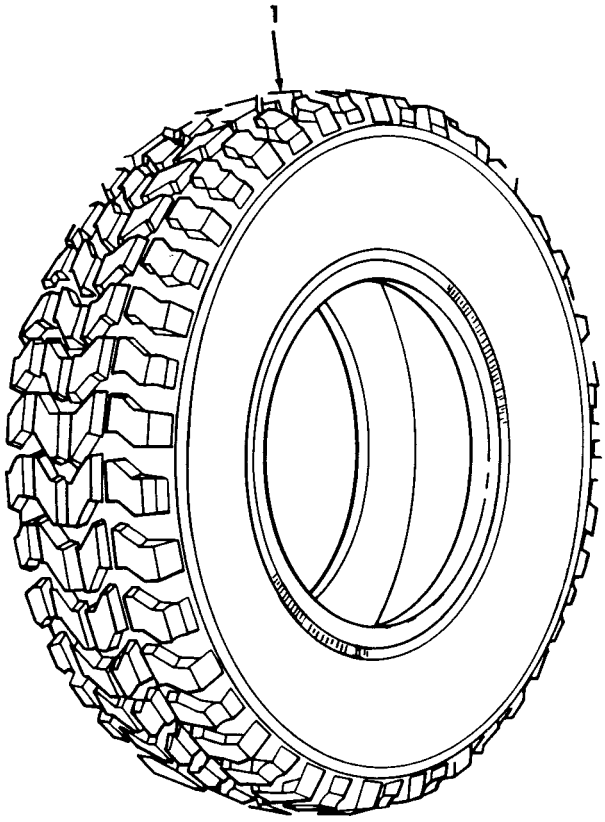

Figure 132. Tires, MT (Serial Number 246889 and Below).

(1) ITEM NO	(2) SMR CODE	(3) NSN	(4) CAGEC	(5) PART NUMBER	(6) DESCRIPTION AND USABLE ON CODES(UOC)	(7) QTY
					GROUP 1313 TIRES,TUBES,TIRE CHAINS	
					FIG. 132 TIRES,MT(SERIAL NUMBER 246889 AND BELOW)	
1	PCOFH	2610013337632	81348	GP3STYLXTYRACLO/ O/37-12.50R16.50	TIRE,PNEUMATIC,VEHI RADIAL 37 X 12.50 X 16.50.....	4

END OF FIGURE

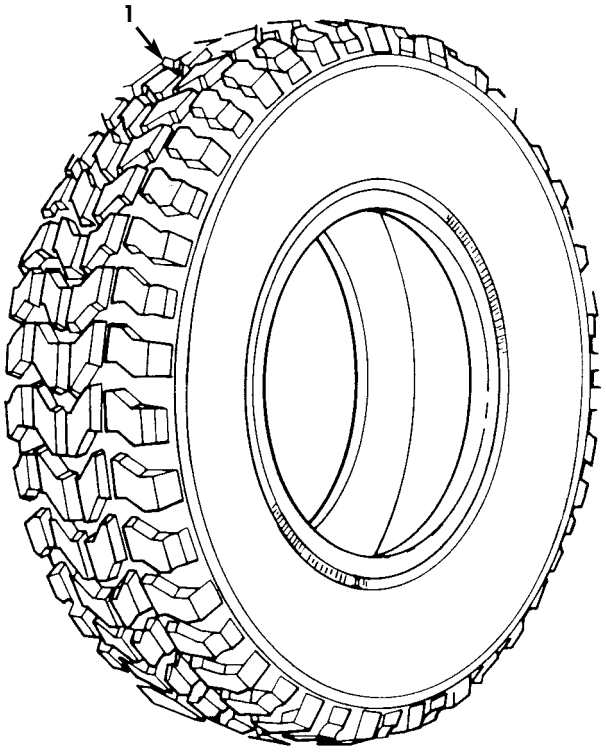

Figure 132A. Tires, MTR Load Range D and E (Serial Number 246890 and Above).

(1) ITEM NO	(2) SMR CODE	(3) NSN	(4) CAGEC	(5) PART NUMBER	(6) DESCRIPTION AND USABLE ON CODES(UOC)	(7) QTY
					GROUP 1313 TIRES, TUBES, TIRE CHAINS	
					FIG. 132A TIRES,MTR LOAD RANGE D AND E (SERIAL NUMBER 246890 AND ABOVE)	
* 1	PCOFH	2610015414090	12195	08973	TIRE,PNEUMATIC,VEHI RADIAL. RADIAL,37 X12.50 X 16.50 MTR LOAD RANGE D..... UOC:TTA,TTT,TT1,UUA,UUU,UU1,UU2	4
* 1	PCOFH	2610015638328	04NP3	750-110-215	TIRE,PNEUMATIC,VEHI RADIAL. RADIAL,37 X12.50 X 16.50 MTR LOAD RANGE E..... UOC:TTA,TTT,TT1,UUA,UUU,UU1,UU2	4
					END OF FIGURE	

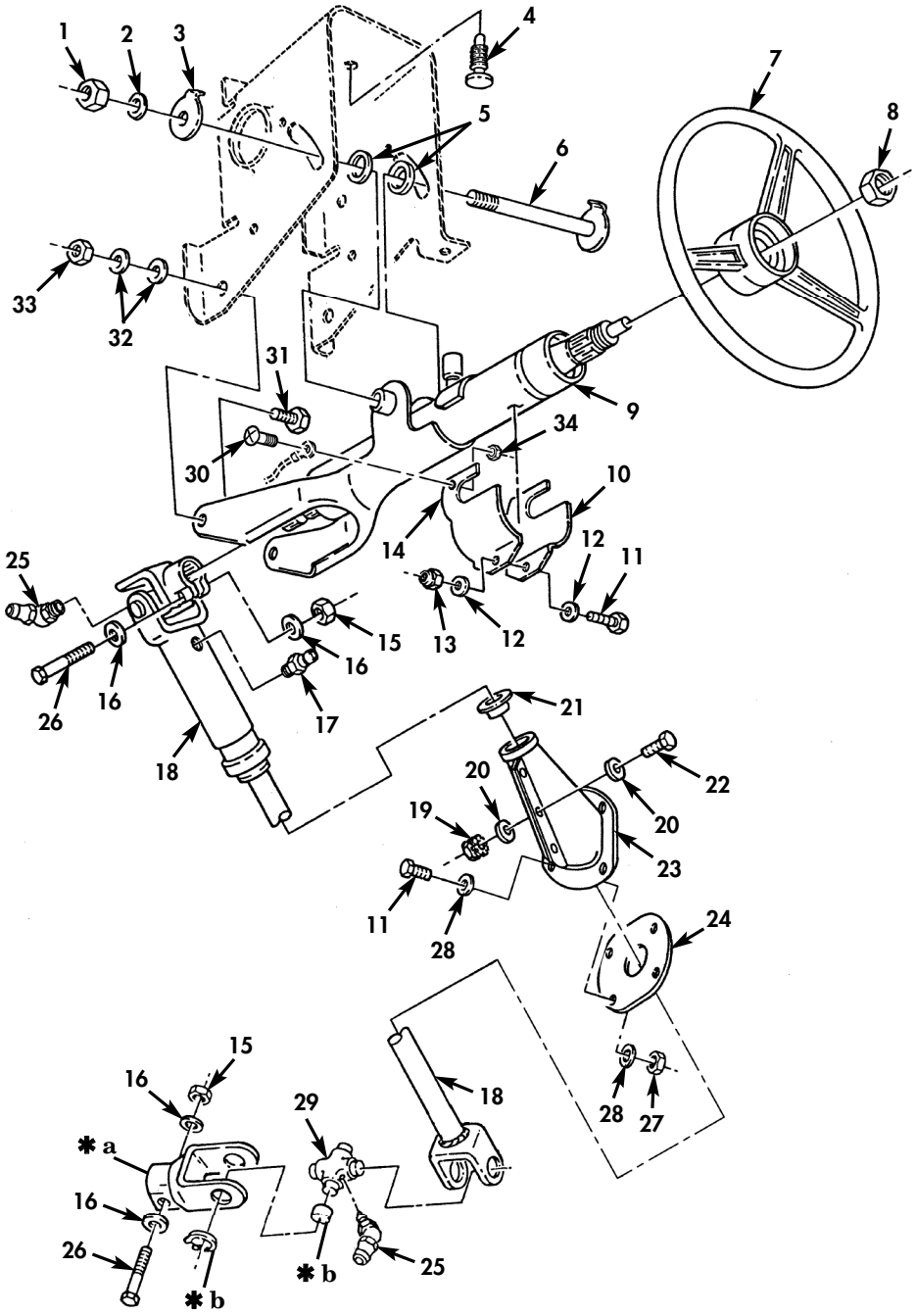

✱**a** PART OF ITEM 18
✱**b** PART OF ITEM 29

Figure 133. Steering Column, Wheel, and Intermediate Shaft.

(1) ITEM NO	(2) SMR CODE	(3) NSN	(4) CAGEC	(5) PART NUMBER	(6) DESCRIPTION AND USABLE ON CODES(UOC)	(7) QTY
					GROUP 1401 MECHANICAL STEERING GEAR ASSEMBLY	
					FIG. 133 STEERING COLUMN,WHEEL,AND INTERMEDIATE SHAFT	
1	PAOZZ	5310009359021	96906	MS51943-35	NUT,SELF-LOCKING,HE 3/8-16 PART OF KIT P/N 57K3205.....	1
* 2	PAOZZ	5310000045033	80205	MS35338-46	WASHER,LOCK 3/8.....	1
3	PAOZZ	5310011880745	34623	5585103	WASHER,KEY PART OF KIT P/N 57K3205..	1
* 4	PFOZZ	5325012097843	19207	12339402	GROMMET,NONMETALLIC.....	1
5	PAOZZ	5310011881093	19207	12339308	WASHER,RECESSED.....	2
6	PAOZZ	5315012013592	19207	12339310	PIN,STRAIGHT,THREAD PART OF KIT P/N 57K3205.....	1
7	PAOZZ	2530014112729	19207	12446803	STEERING WHEEL.....	1
8	PAOZZ	5310001263842	19207	7063812	NUT,PLAIN,HEXAGON 5/8-18.....	1
9	PAOZZ	2530014112735	0LB15	1493B-SA	HOUSING,STEERING CO PART OF KIT P/N 57K3205.....	1
10	PAOZZ	2530013835740	34623	12342875	SUPPORT,STEERING CO.....	1
11	PAOZZ	5305002253843	80204	B1821BH025C100N	SCREW,CAP,HEXAGON H 1/4-20 X 1.00 PART OF KIT P/N 57K3205.....	5
12	PAOZZ	5310008094058	96906	MS27183-10	WASHER,FLAT 1/4.....	2
13	PAOZZ	5310000881251	81349	M45913/1-4CG5C	NUT,SELF-LOCKING,HE 1/4-20.....	1
14	PAOZZ	2530013847154	19207	12342876	SUPPORT,STEERING CO.....	1
15	PAOZZ	5310008406222	19207	8712289-4	NUT,SELF-LOCKING,HE 7/16-20.....	2
16	PAOZZ	5310008094085	96906	MS27183-16	WASHER,FLAT 7/16.....	4
17	PAOZZ	4730001720010	32546	13044	FITTING,LUBRICATION.....	1
* 18	PAOZZ	2530015660968	72447	915027-18	SHAFT,STEERING COLU SERIAL NUMBER 246890 AND ABOVE.....	1
* 18	PAOZZ	2520012142565	34623	12339210-2	PROPELLER SHAFT WIT SERIAL NUMBER 246889 AND BELOW.....	1
* 19	PAOZZ	5310009349764	80205	MS35649-205B	NUT,PLAIN,HEXAGON 10-24.....	3
20	PAOZZ	5310000145850	96906	MS27183-42	WASHER,FLAT 10.....	6
21	PAOZZ	2530007537285	96881	14L14F	NYLINER.....	1
22	PAOZZ	5305002400194	96906	MS51849-76	SCREW,MACHINE 10-24 X 3/4.....	3
* 23	PCOZZ	2530012858381	19207	12341893	BOOT,VEHICULAR COMP.....	1
24	PAOZZ	5330012097723	34623	5584384	SEAL,PLAIN.....	1
25	PAOZZ	4730005852653	36251	5311	FITTING,LUBRICATION.....	2
26	PAOZZ	5306011922207	7X677	454977	BOLT,MACHINE 7/16-20 X 2.00.....	2
* 27	PAOZZ	5310000614650	80205	M45913/3-4CG8C	NUT,SELF-LOCKING,HE 1/4-20 PART OF KIT P/N 57K3205.....	6
28	PAOZZ	5310011023270	24617	2436161	WASHER,FLAT 1/4.....	8
29	PAOZZ	2520003522168	78500	CPL6R50	SPIDER,UNIVERSAL JO.....	2
30	PAOZZ	5305015008280	24617	456931	SCREW,CAP,HEXAGON H 10-32 X 1.125..	1
31	PAOZZ	5305014491983	19207	12447027	SCREW,CAP,SOCKET HE 5/16-18 X 3/4 PART OF KIT P/N 57K3205.....	2
32	PAOZZ	5310011191024	24617	2436162	WASHER,FLAT 5/16 PART OF KIT P/N 57K3205.....	4
* 33	PAOZZ	5310008140673	96906	M45913/3-5CG8C	NUT,SELF LOCKING 5/16-18 PART OF KIT 57K3205.....	2
34	PAOZZ	5310001249265	72582	271169	NUT,PLAIN,ASSEMBLED 10-32.....	1

END OF FIGURE

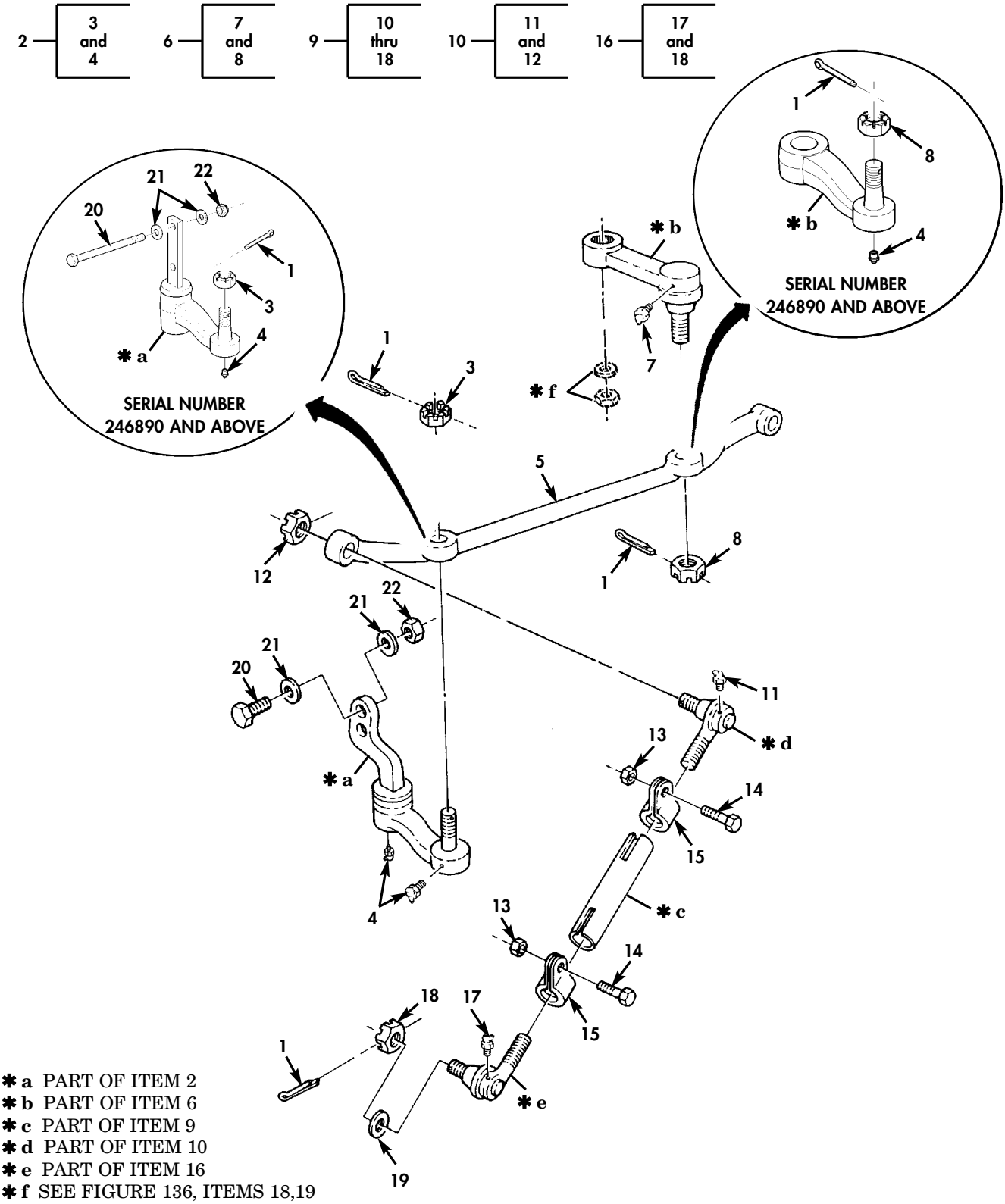

Figure 134. Steering Linkage.

(1) ITEM NO	(2) SMR CODE	(3) NSN	(4) CAGEC	(5) PART NUMBER	(6) DESCRIPTION AND USABLE ON CODES(UOC)	(7) QTY
					GROUP 1401 MECHANICAL STEERING GEAR ASSEMBLY	
					FIG. 134 STEERING LINKAGE	
1	PAOZZ	5315000120123	24617	137195	PIN,COTTER 1.8 X 1-1/4.....	6
* 2	PAOZZ	3040015394911	34623	6015229	IDLER ARM,STEERING SERIAL NUMBER 246890 THRU 299999.....	1
* 2	PAOZZ	2530014203839	34623	EC6004839B1	IDLER ARM,STEERING SERIAL NUMBER 246889 AND BELOW.....	1
* 2	PAOZZ	2530015661514	1WE80	6028683	IDLER ARM,STEERING SERIAL NUMBER 300000 AND ABOVE..... UOC:TTA,TTT,TT1,UUA,UUU,UU1,UU2	1
* 3	PAOZZ	5310008507004	96906	MS35692-54	.NUT,PLAIN,SLOTTED 5/8-18 SERIAL NUMBER 246889 AND BELOW.....	1
* 3	PAOZZ	5310008506993	96906	MS35692-62	.NUT,PLAIN,SLOTTED,H SERIAL NUMBER 246890 AND ABOVE.....	1
4	PAOZZ	4730000504203	81343	AS15001-1	.FITTING,LUBRICATION.....	2
* 5	PAOZZ	2530015660133	01212	SE80271	DRAG LINK,STEERING SERIAL NUMBER 300000 AND ABOVE..... UOC:TTA,TTT,TT1,UUA,UUU,UU1,UU2	1
* 5	PAOZZ	2530015544734	34623	6500007	DRAG LINK,STEERING SERIAL NUMBER 246890 THRU 299999.....	1
* 5	PAOZZ	2530014203837	34623	6023077	DRAG LINK,STEERING SERIAL NUMBER 246889 AND BELOW.....	1
* 6	PAOZZ	2530014205180	34623	EC6004838	ARM,STEERING GEAR SERIAL NUMBER 246889 AND BELOW.....	1
* 6	PAOZZ	2530015544732	34623	6035179	ARM,STEERING GEAR SERIAL NUMBER 246890 THRU 299999.....	1
* 6	PAOZZ	2530015657606	78222	2596924	PITMAN ARM,STEERING SERIAL NUMBER 300000 AND ABOVE..... UOC:TTA,TTT,TT1,UUA,UUU,UU1,UU2	1
7	PAOZZ	4730000504203	81343	AS15001-1	.FITTING,LUBRICATION.....	1
* 8	PAOZZ	5310008507004	96906	MS35692-54	.NUT,PLAIN,SLOTTED 5/8-18 SERIAL NUMBER 246889 AND BELOW.....	1
* 8	PAOZZ	5310008506993	96906	MS35692-62	.NUT,PLAIN,SLOTTED,H SERIAL NUMBER 246890 AND ABOVE..... UOC:TTA,TTT,TT1,UUA,UUU,UU1,UU2	1
* 9	PAOZZ	2530014212563	34623	06005119	TIE ROD,STEERING L.H. OR R.H.,SERIAL NUMBER 246889 AND BELOW.....	1
* 9	PAOZZ	2530015544728	34623	6028192	TIE ROD,STEERING L.H. OR R.H.,SERIAL NUMBER 246890 AND ABOVE..... UOC:TTA,TTT,TT1,UUA,UUU,UU1,UU2	2
* 10	PAOZZ	2530011892195	98349	L-18-SV-5151-C-1 2	.TIE ROD END,STEERIN R.H.THREAD, SERIAL NUMBER 246889 AND BELOW.....	1
* 10	PAOZZ	2530015667801	63477	SE639	.TIE ROD END,STEERIN R.H.THREAD, SERIAL NUMBER 246890 AND ABOVE..... UOC:TTA,TTT,TT1,UUA,UUU,UU1,UU2	1
11	PAOZZ	4730000504205	81343	AS15001-3	..FITTING,LUBRICATION R.H.....	1
12	PAOZZ	5310012122213	7X677	9428308	..NUT,PLAIN,SLOTTED,H.....	1

(1) ITEM NO	(2) SMR CODE	(3) NSN	(4) CAGEC	(5) PART NUMBER	(6) DESCRIPTION AND USABLE ON CODES(UOC)	(7) QTY
* 13	PAOZZ	5310011504003	24617	9422299	.NUT,SELF-LOCKING,HE 7/16-14,SERIAL NUMBER 246889 AND BELOW..... UOC:TTA,TTT,TT1,UUA,UUU,UU1,UU2	2
* 13	PAOZZ	5310015655271	81349	M45913/4-7CG8Z	.NUT,SELF-LOCKING,HE 7/16-14,SERIAL NUMBER 246890 AND ABOVE..... UOC:TTA,TTT,TT1,UUA,UUU,UU1,UU2	2
* 14	PAOZZ	5305012117478	7X677	9419079	.SCREW,CAP,HEXAGON H 7/16-14 X 1.75 SERIAL NUMBER 246889 AND BELOW.....	2
* 14	PAOZZ	5305000712056	80204	B1821BH044C175N	.SCREW,CAP,HEXAGON H 7/16-14 X 1.75,SERIAL NUMBER 246890 AND ABOVE. UOC:TTA,TTT,TT1,UUA,UUU,UU1,UU2	2
* 15	PAOZZ	5340011918161	98349	L-18-CPS-5-A-10	.CLAMP,LOOP SERIAL NUMBER 248889 AND BELOW.....	2
* 15	PAOZZ		63477	SE80886	.CLAMP,LOOP SERIAL NUMBER 246890 AND ABOVE..... UOC:TTA,TTT,TT1,UUA,UUU,UU1,UU2	2
* 16	PAOZZ	2530011972160	98349	L-18-SV-5150-C-12	.TIE ROD END,STEERIN L.H. THREAD, SERIAL NUMBER 246889 AND BELOW.....	1
* 16	PAOZZ	2530015661485	63477	SE640	.TIE ROD END,STEERIN L.H. THREAD, SERIAL NUMBER 246890 AND ABOVE..... UOC:TTA,TTT,TT1,UUA,UUU,UU1,UU2	1
17	PAOZZ	4730000504205	81343	AS15001-3	..FITTING,LUBRICATION L.H.....	1
18	PAOZZ	5310012122213	7X677	9428308	..NUT,PLAIN,SLOTTED,H.....	1
19	PAOZZ	5310011517347	24617	2436167	WASHER,FLAT 5/8.....	2
* 20	PAOZZ	5305000043164	80204	B1821BH038C475N	SCREW,CAP,HEXAGON H 3/8-16 X 4.75, SERIAL NUMBER 246889 AND BELOW.....	2
* 20	PAOZZ	5305010322312	80204	B1821BH050C600N	SCREW,CAP,HEXAGON H 1/2-13 X 6.00, SERIAL NUMBER 246890 AND ABOVE..... UOC:TTA,TTT,TT1,UUA,UUU,UU1,UU2	2
* 21	PAOZZ	5310008094061	96906	MS27183-15	WASHER,FLAT 7/16,SERIAL NUMBER 246889 AND BELOW.....	4
* 21	PAOZZ	5310011211703	24617	2436165	WASHER,FLAT 1/2,SERIAL NUMBER 246890 AND ABOVE..... UOC:TTA,TTT,TT1,UUA,UUU,UU1,UU2	4
* 22	PAOZZ	5310008960903	96906	MS51967-12	NUT,PLAIN,HEXAGON 7/16-14,SERIAL NUMBER 246889 AND BELOW.....	2
* 22	PAOZZ	5310004883889	96906	MS51943-39	NUT,SELF-LOCKING,HE 1/2-13,SERIAL NUMBER 246890 AND ABOVE..... UOC:TTA,TTT,TT1,UUA,UUU,UU1,UU2	2

END OF FIGURE

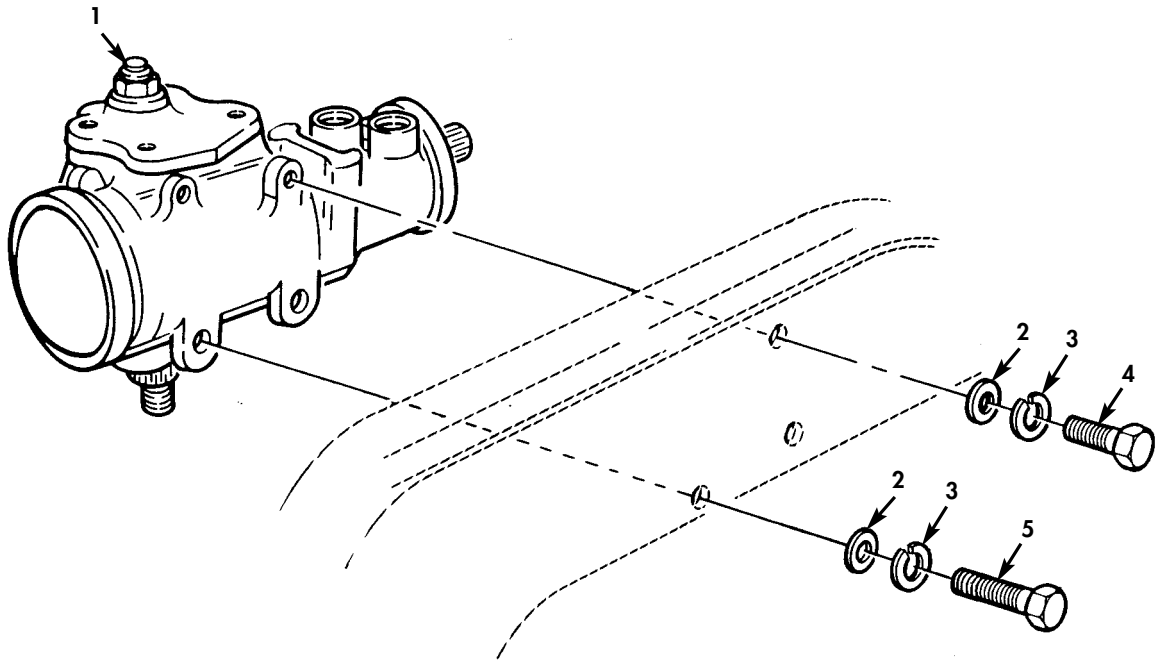

Figure 135. Power Steering Gear and Mounting Hardware (Serial Number 246889 and Below).

(1) ITEM NO	(2) SMR CODE	(3) NSN	(4) CAGEC	(5) PART NUMBER	(6) DESCRIPTION AND USABLE ON CODES(UOC)	(7) QTY
					GROUP 1407 POWER STEERING GEAR ASSEMBLY	
					FIG. 135 POWER STEERING GEAR AND MOUNTING HARDWARE (SERIAL NUMBER 246889 AND BELOW)	
1	PAOFF	2530014231796	34623	12460232	STEERING GEAR..... UOC:XAA,XBB	1
2	PAOZZ	5310008094085	96906	MS27183-16	WASHER,FLAT 7/16..... UOC:XAA,XBB	3
3	PAOZZ	5310002090965	96906	MS35338-47	WASHER,LOCK 7/16..... UOC:XAA,XBB	3
4	PAOZZ	5306012546356	96906	MS35764-861	BOLT,SELF-LOCKING 7/16-14 X 4.00... UOC:XAA,XBB	1
5	PAOZZ	5305012134149	7X677	9430761	SCREW,CAP,HEXAGON H 7/16-14 X 5.25.	2

END OF FIGURE

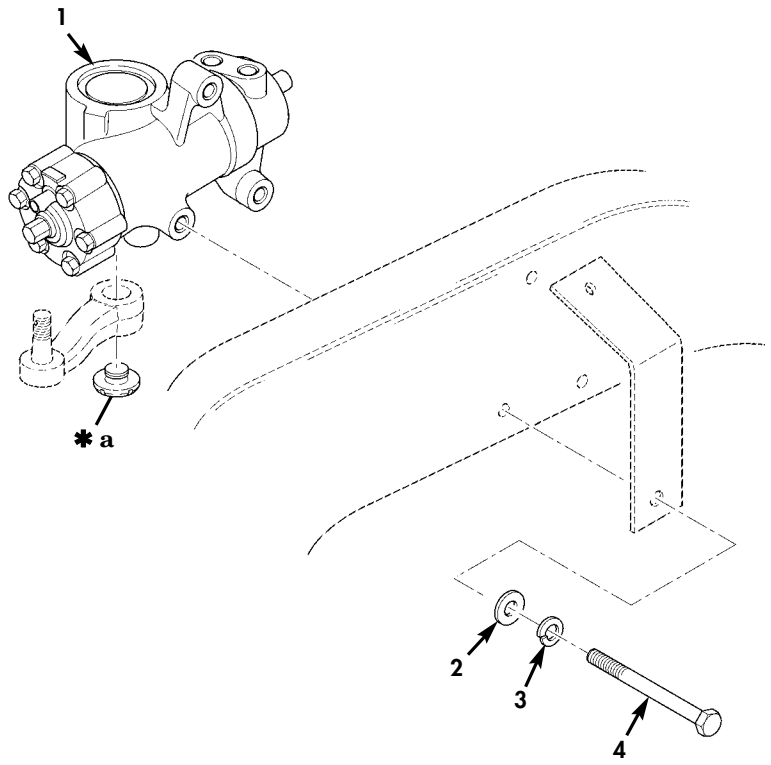

✱**a** PART OF ITEM 1

Figure 135A. Power Steering Gear and Mounting Hardware (Serial Number 246890 and Above).

(1) ITEM NO	(2) SMR CODE	(3) NSN	(4) CAGEC	(5) PART NUMBER	(6) DESCRIPTION AND USABLE ON CODES(UOC)	(7) QTY
					GROUP 1407 POWER STEERING GEAR ASSEMBLY	
					FIG. 135A POWER STEERING GEAR AND MOUNTING HARDWARE(SERIAL NUMBER 246890 AND ABOVE)	
* 1	PAOFF	2530015543441	34623	6037658	STEERING GEAR..... UOC:TTA,TTT,TT1,UUA,UUU,UU1,UU2	1
* 2	PAOZZ	5310011517347	24617	2436167	WASHER,FLAT 5/8..... UOC:TTA,TTT,TT1,UUA,UUU,UU1,UU2	3
* 3	PAOZZ	5310009370453	80205	MS35338-145	WASHER,LOCK 5/8..... UOC:TTA,TTT,TT1,UUA,UUU,UU1,UU2	3
* 4	PAOZZ	5305007262567	80204	B1821BH063F500N	SCREW,CAP,HEXAGON H 5/8-24 X 5.00.. UOC:TTA,TTT,TT1,UUA,UUU,UU1,UU2	3

END OF FIGURE

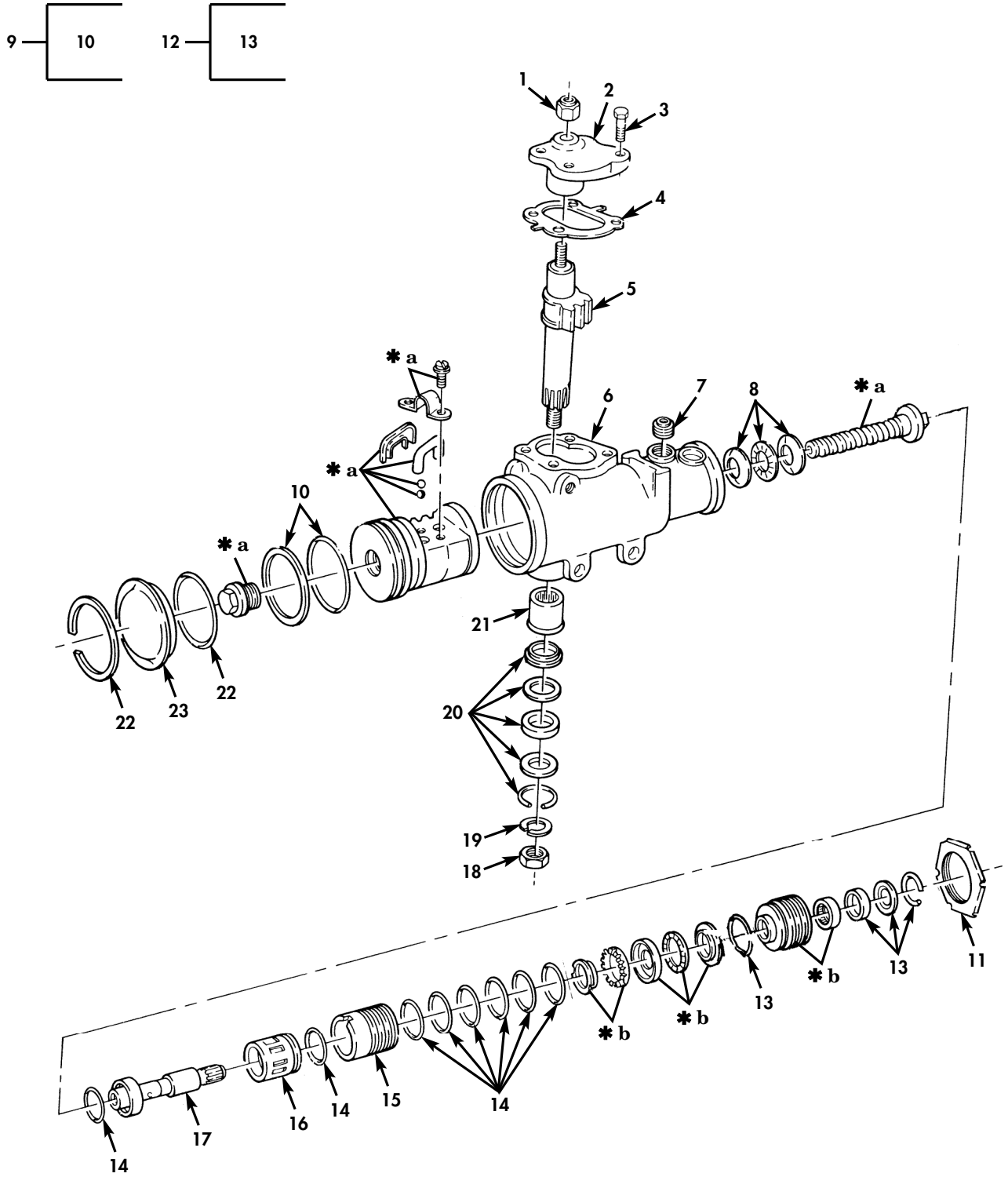

✱**a** PART OF ITEM 9
✱**b** PART OF ITEM 12
FOR ASSEMBLY, SEE
FIGURE 135, ITEM 1

Figure 136. Power Steering Gear Assembly (Steering Gear P/N 12460232) (Serial Number 246889 and Below).

(1) ITEM NO	(2) SMR CODE	(3) NSN	(4) CAGEC	(5) PART NUMBER	(6) DESCRIPTION AND USABLE ON CODES(UOC)	(7) QTY
					GROUP 1407 POWER STEERING GEAR ASSEMBLY	
					FIG. 136 POWER STEERING GEAR ASSEMBLY(STEERING GEAR P/N 12460232) (SERIAL NUMBER 246889 AND BELOW)	
1	PAFZZ	5310010388500	34623	5740444	NUT,SELF-LOCKING,SI.....	1
* 2	PAFZZ	2520002247463	24617	7815398	COVER,ASSEMBLY.....	1
3	PAFZZ	5306010402041	34623	5740445	BOLT,MACHINE PART OF KIT P/N 57K3489	4
4	PAFZZ	2530010977659	34623	5740448	SEAL KIT PART OF KIT P/N 57K3489....	1
* 5	PAFZZ	3040015419924	34623	5740442	GEARSHAFT,SPUR.....	1
6	XAFZZ		34623	5740454	HOUSING,STEERING.....	1
7	PAFZZ	4820011914262	7X677	7834284	PARTS KIT,SAFETY RE PART OF KIT P/N 57K0242.....	1
8	PAFZZ	3110010406541	34623	5740476	BEARING ASSEMBLY PART OF KIT P/N 57K0242.....	1
9	PAFZZ	3040011234942	34623	5740462	PARTS KIT,LINEAR AC PART OF KIT P/N 57K0242.....	1
10	PAFZZ	2530010331855	34623	5740465	.PARTS KIT,STEERING PART OF KIT P/N 57K0240.....	1
11	PAFZZ	5310010388501	34623	5741145	NUT,ADJUST PLUG LOC.....	1
12	PAFZZ	2530010334237	52788	7817725	PARTS KIT,STEERING PART OF KIT P/N 57K0242.....	1
13	PFFZZ	5330008439235	34623	5741892	.PARTS KIT,SEAL REPL PART OF KIT P/N 57K0241.....	1
14	PAFZZ	2530009609363	34623	5740499	PARTS KIT,STEERING PART OF KIT P/N 57K0241.....	1
* 15	PAFZZ	4820013066838	34623	5740495	BODY,VALVE PART OF KIT P/N 7846626..	1
* 16	PAFZZ	4820013033982	34623	5740497	VALVE,LINEAR,DIRECT PART OF KIT P/N 7846626.....	1
* 17	PAFZZ	2530013041461	34623	5740498	SHAFT,STEERING COLU PART OF KIT P/N 7846626.....	1
18	PAOZZ	5310001668567	7X677	5667628	NUT,PLAIN,HEXAGON.....	1
19	PAOZZ	5310011442779	34623	5550554	WASHER,LOCK 7/8.....	1
* 20	KFFZZ	5330010969650	7X677	26057638	SEAL,PITMAN SHAFT PART OF KIT P/N 57K3489.....	1
21	PAFZZ	3110004031488	34623	5740453	BEARING,ROLLER,NEED.....	1
22	PAFZZ	2530010341715	34623	5740458	PARTS KIT,STEERING PART OF KIT P/N 57K0240.....	1
23	PAFZZ	5340009609340	34623	5740456	CAP-PLUG,PROTECTIVE.....	1

END OF FIGURE

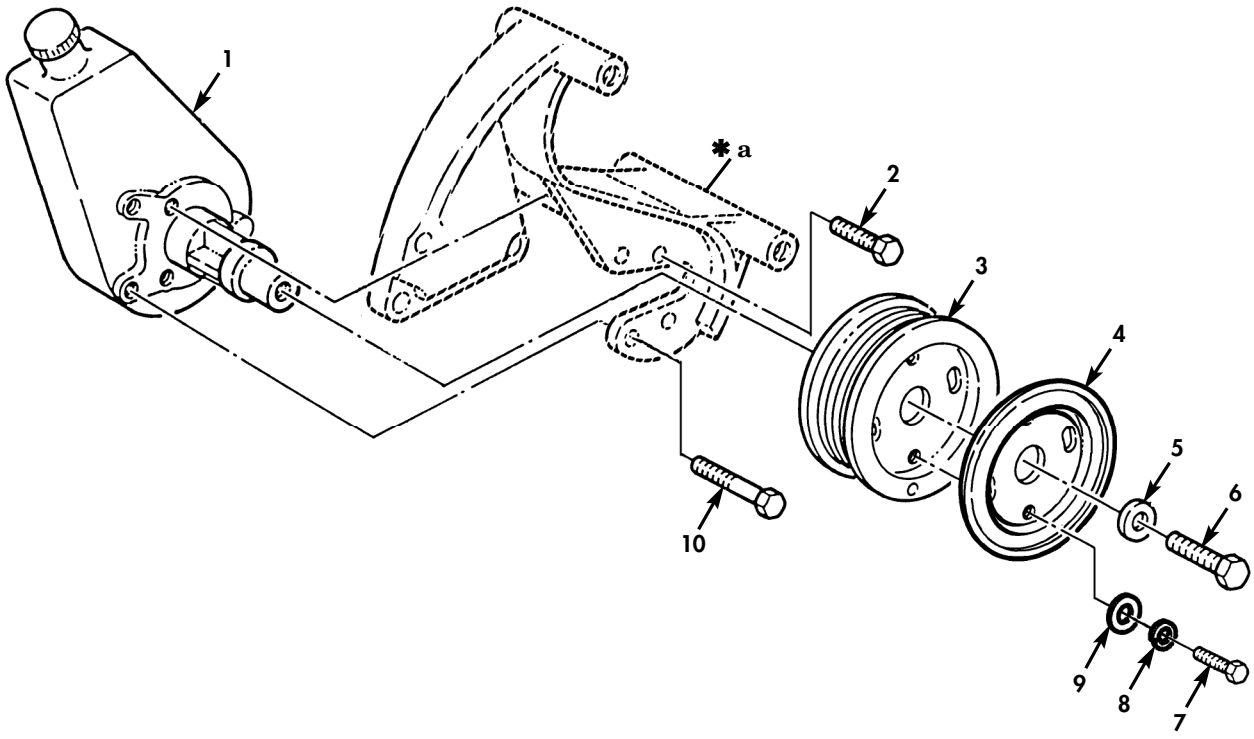

✱**a** SEE FIGURE 45, ITEM 8
FOR BREAKDOWN OF
ITEM 1, SEE FIGURE 138

Figure 137. Power Steering Pump, Pulley, and Mounting Hardware (Serial Number 196900 and Below).

(1) ITEM NO	(2) SMR CODE	(3) NSN	(4) CAGEC	(5) PART NUMBER	(6) DESCRIPTION AND USABLE ON CODES(UOC)	(7) QTY
					GROUP 1410 HYDRAULIC PUMP OR FLUID MOTOR ASSEMBLY	
					FIG. 137 POWER STEERING PUMP,PULLEY, AND MOUNTING HARDWARE (SERIAL NUMBER 196900 AND BELOW)	
* 1	PAOFF	2530014602439	19207	12349495-1	PUMP ASSEMBLY,POWER.....	1
2	PAOZZ	5306012434650	7X677	11504596	BOLT,MACHINE.....	2
3	PAOZZ	3020014442311	34623	RCSK18686	PULLEY,GROOVE.....	1
4	PAOZZ	3020014766520	19207	12469106	GUARD,MECHANICAL DR.....	1
5	PAOZZ	5310012113811	7X677	9417793	WASHER,FLAT 3/8.....	1
6	PAOZZ	5305000680510	80204	B1821BH038C100N	SCREW,CAP,HEXAGON H 3/8-16 X 1.00..	1
7	PAOZZ	5305011409118	80204	B1821BH038C088N	SCREW,CAP,HEXAGON H 3/8-16 X 7/8...	2
* 8	PAOZZ	5310006379541	65035	P49866-11	WASHER,LOCK.....	2
9	PAOZZ	5310000806004	96906	MS27183-14	WASHER,FLAT.....	2
10	PAOZZ	5306011857048	7X677	11513606	BOLT,MACHINE M10-1.5 X 25MM.....	2

END OF FIGURE

13—14

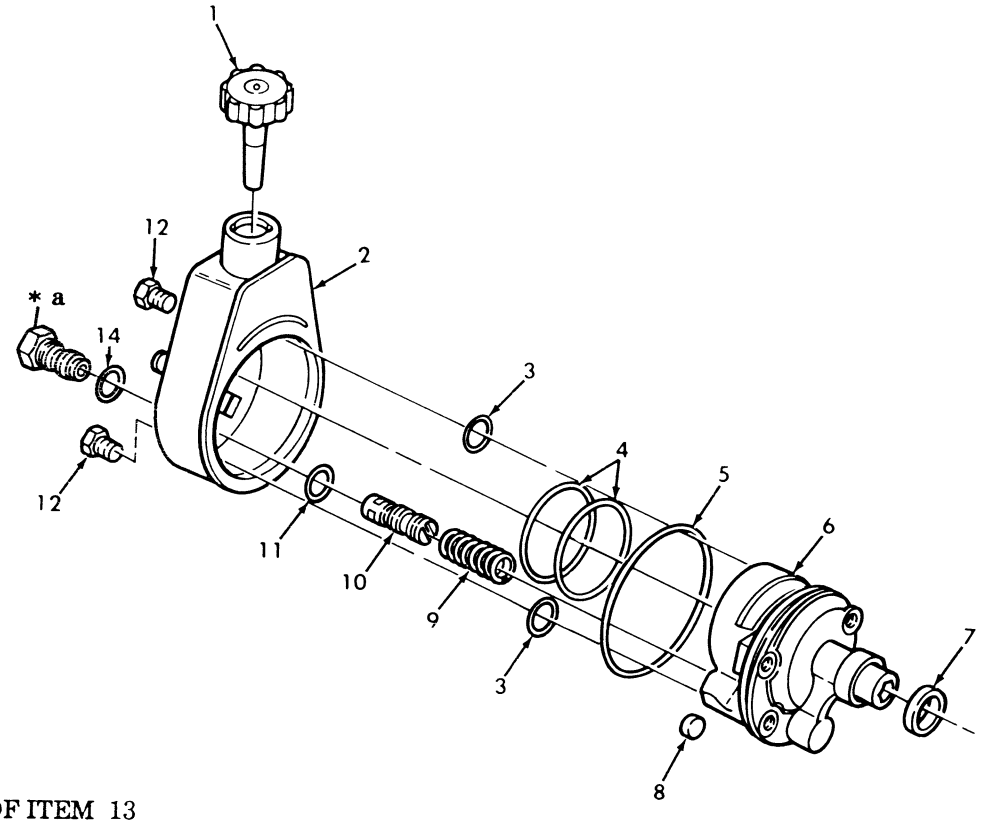

* a PART OF ITEM 13

Figure 138. Power Steering Pump Assembly.

(1) ITEM NO	(2) SMR CODE	(3) NSN	(4) CAGEC	(5) PART NUMBER	(6) DESCRIPTION AND USABLE ON CODES(UOC)	(7) QTY
					GROUP 1410 HYDRAULIC PUMP OR FLUID MOTOR ASSEMBLY	
					FIG. 138 POWER STEERING PUMP ASSEMBLY	
1	PAOZZ	6680011522845	7X677	7834183	GAGE ROD-CAP,LIQUID.....	1
2	XAFZZ		34623	5740430	RESERVOIR ASSEMBLY.....	1
3	KFFZZ		34623	5740429	SEAL PART OF KIT P/N 7848522.....	2
4	KFFZZ		34623	5740464	RING,SEAL PART OF KIT P/N 7848522...	2
5	KFFZZ		34623	5740431	SEAL PART OF KIT P/N 7848522.....	1
6	PAFZZ	4320011555145	34623	5740432	HOUSING,LIQUID PUMP.....	1
7	KFFZZ		34623	5741746	SEAL PART OF KIT P/N 7848522.....	1
8	KFFZZ		52788	5692682	MAGNET,PERMANENT PART OF KIT P/N 7848522.....	1
9	PAOZZ	5360011496308	7X677	5688037	SPRING,HELICAL,COMP.....	1
10	PAOZZ	4820010837993	34623	5740433	CARTRIDGE,RELIEF VA.....	1
11	PAOZZ	5330008484439	48018	5688049	GASKET PART OF KIT P/N 7848522.....	1
12	PAOZZ	5305011629713	7X677	7830239	SCREW,CAP,HEXAGON H.....	2
13	PAOZZ	4320011555153	7X677	7830913	CONNECTOR,FLUID,PUM.....	1
14	PAOZZ	5331011571884	34623	5740436	.O-RING PART OF KIT P/N 7848522.....	1

END OF FIGURE

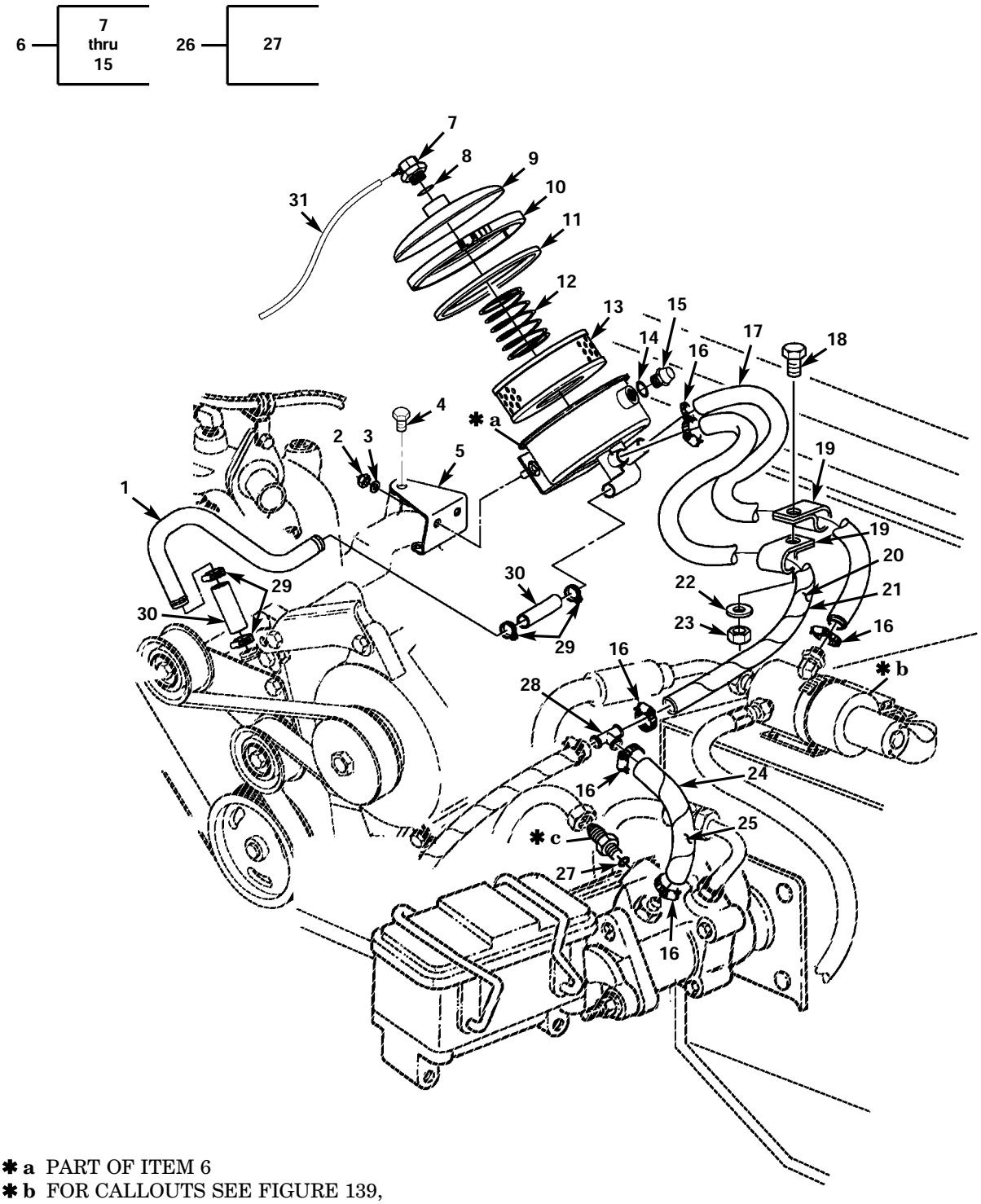

✱**a** PART OF ITEM 6
✱**b** FOR CALLOUTS SEE FIGURE 139, ITEMS 3 THROUGH 6
✱**c** PART OF ITEM 26

Figure 138A. Remote Power Steering Reservoir and Hoses (Serial Number 196901 and Above).

(1) ITEM NO	(2) SMR CODE	(3) NSN	(4) CAGEC	(5) PART NUMBER	(6) DESCRIPTION AND USABLE ON CODES(UOC)	(7) QTY
					GROUP 1410 HYDRAULIC PUMP OR FLUID MOTOR ASSEMBLY	
					FIG. 138A REMOTE POWER STEERING RESERVOIR AND HOSES (SERIAL NUMBER 196901 AND ABOVE)	
1	PAOZZ	4710014886143	19207	12469478	TUBE,BENT METALLIC.....	1
2	PAOZZ	5310004093355	24617	120376	NUT,PLAIN HEXAGON.....	2
3	PAOZZ	5310000120214	24617	120214	WASHER,LOCK.....	2
4	PAOZZ	5305007813928	80204	B1821BH038C400N	SCREW,CAP,HEXAGON H 3/8-16 X 4.00..	1
5	PAOZZ	5340014886185	34623	RCSK19361	BRACKET,MOUNTING.....	1
6	PAOZZ	2530014886147	76700	94252A	RESERVOIR,PUMP ASSEM.....	1
7	PAOZZ	4730015063179	76700	Q348148	.ELBOW,TUBE TO HOSE.....	1
8	PAOZZ	5331015057218	76700	Q79870	.O-RING.....	1
9	PAOZZ	5340015059463	76700	Q206141	.COVER ASSEMBLY.....	1
* 10	PAOZZ	5340015602876	76700	Q186425	.CLAMP.....	1
11	PAOZZ	5330015057214	76700	Q79699	.GASKET.....	1
* 12	PAOZZ	5300015462755	76700	Q63330	.SPRING.....	1
13	PAOZZ	4330015062918	9C234	5716372	.FILTER ELEMENT.....	1
14	PAOZZ	5331013802118	02697	N0674 5-617	.O-RING.....	1
15	PAOZZ	6680014824995	60827	DP3-01-01	.INDICATOR,SIGHT LIQ.....	1
16	PAOZZ	4730009086292	19207	11608950-13	CLAMP,HOSE.....	4
* 17	MOOZZ		7X677	GM6210M-22	HOSE,NONME MAKE FROM HOSE, P/N 5741209,22.50 INCHES LONG.....	1
18	PAOZZ	5305000687837	80204	B1821BH025C063N	SCREW,CAP HEXAGON H.....	1
19	PAOZZ	5340000881254	96906	MS21333-104	CLAMP,LOOP.....	2
20	MOOZZ		19207	12469440-5	WRAP,SPIRAL MAKE FROM TUBING, PLASTIC SPIRAL WRAP P/N B47287-II-1/2,18 INCHES LONG.....	1
* 21	MOOZZ		7X677	GM6210M-19	HOSE,NONME MAKE FROM HOSE, P/N 5741209,19.00 INCHES LONG.....	1
22	PAOZZ	5310011036042	24617	120392	WASHER,FLAT.....	1
23	PAOZZ	5310000614650	96906	MS51943-31	NUT,SELF-LOCKING.....	1
* 24	MOOZZ		7X677	GM6210M-8	HOSE,NONME MAKE FROM HOSE P/N 5741209,8 INCHES LONG.....	1
25	MOOZZ		19207	12469440-4	WRAP,SPIRAL MAKE FROM TUBING, PLASTIC SPIRAL WRAP P/N B47287-II-1/2,6 INCHES LONG.....	1
26	PAOZZ	4730014934656	01276	FF3323-0706-259	ADAPTER.....	1
27	PAOZZ	5331005806586	02697	2-011NE674-70	.O-RING.....	1
28	PAOZZ	4730014091204	34623	12447077	TEE,HOSE.....	1
29	PAOZZ	4730014365732	19207	11608950-5	CLAMP,HOSE.....	4
30	PAOZZ	4720015054702	73002	9781210307	HOSE,NONMETALLIC.....	2
* 31	MOOZZ		19207	CPR104420-1-47	TUBE,NONMETALLIC MAKE FROM TUBE P/N CPR104420-1, 47 INCHES LONG.....	1

END OF FIGURE

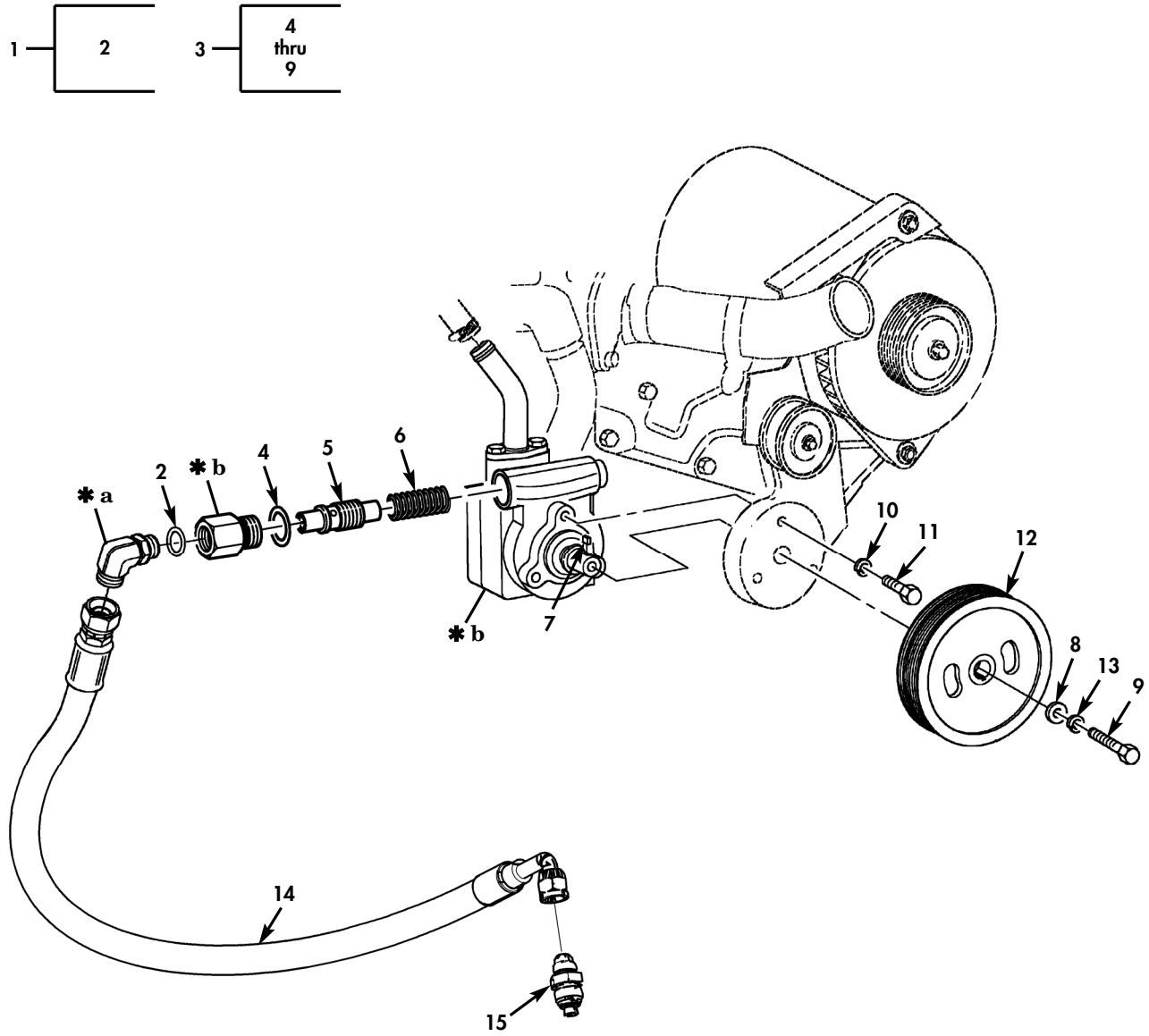

✱**a** PART OF ITEM 1
✱**b** PART OF ITEM 3

Figure 138B. Power Steering Pump, Pulley, and Related Parts (Serial Number 196901 and Above).

(1) ITEM NO	(2) SMR CODE	(3) NSN	(4) CAGEC	(5) PART NUMBER	(6) DESCRIPTION AND USABLE ON CODES(UOC)	(7) QTY
					GROUP 1410 HYDRAULIC PUMP OR FLUID MOTOR ASSEMBLY	
					FIG. 138B POWER STEERING PUMP,PULLEY AND RELATED PARTS(SERIAL NUMBER 196901 AND ABOVE)	
* 1	PAOZZ	4730013588538	01276	GG308-NP08-18	ELBOW,TUBE TO BOSS.....	1
2	PAOZZ		01276	FF90154-18	.O-RING.....	1
* 3	PAOZZ	2530015544731	34623	6500522	PUMP ASSEMBLY,POWER SHEPPARD STEERING GEAR SERIAL NUMBER 246890 AND ABOVE.....	1
* 3	PAOZZ	2530014912681	K6019	200 B 8332	PUMP ASSEMBLY,POWER SERIAL NUMBER 196901 TO 246889.....	1
* 4	KFOZZ		K5667	HE260128	.O-RING PART OF KIT P/N 5716414 PART OF KIT P/N HE1280136.....	1
* 5	KFOZZ		K5667	HE1250079/100	.VALVE ASSEMBLY PART OF KIT P/N 5716414 SERIAL NUMBER 196901 TO 246889.....	1
* 5	KFOZZ		K5667	HE1250079/120	.VALVE ASSEMBLY PART OF KIT P/N HE1280136 SERIAL NUMBER 246890 AND ABOVE.....	1
* 6	KFOZZ		K5667	HE11595	.SPRING PART OF KIT P/N 5716414 PART OF KIT P/N HE1280136.....	1
* 7	PAOZZ	5315006165514	80205	MS35756-6	.KEY,WOODRUFF.....	1
8	PAOZZ	5310014912014	K5667	HE206000	.WASHER,FLAT.....	1
9	PAOZZ	5305014912143	K5667	HE1290019	.SCREW.....	1
10	PAOZZ	5310014785620	80204	B18212HRCZ080	WASHER,LOCK.....	3
11	PAOZZ	5305011590065	56161	10501759	SCREW,CAP HEXAGON M8-1.5 X 25.....	3
12	PAOZZ	3020014885635	19207	12469471	PULLEY GROOVE.....	1
* 13	PAOZZ	5310000120214	96906	MS35338-26	WASHER,LOCK	1
* 14	PAOZZ	4720014886156	34623	12469489	HOSE ASSEMBLY,NONME.....	1
* 15	PAOZZ	4730014934056	01276	FF3323-0706-259	ADAPTER,STRAIGHT,TU.....	1

END OF FIGURE

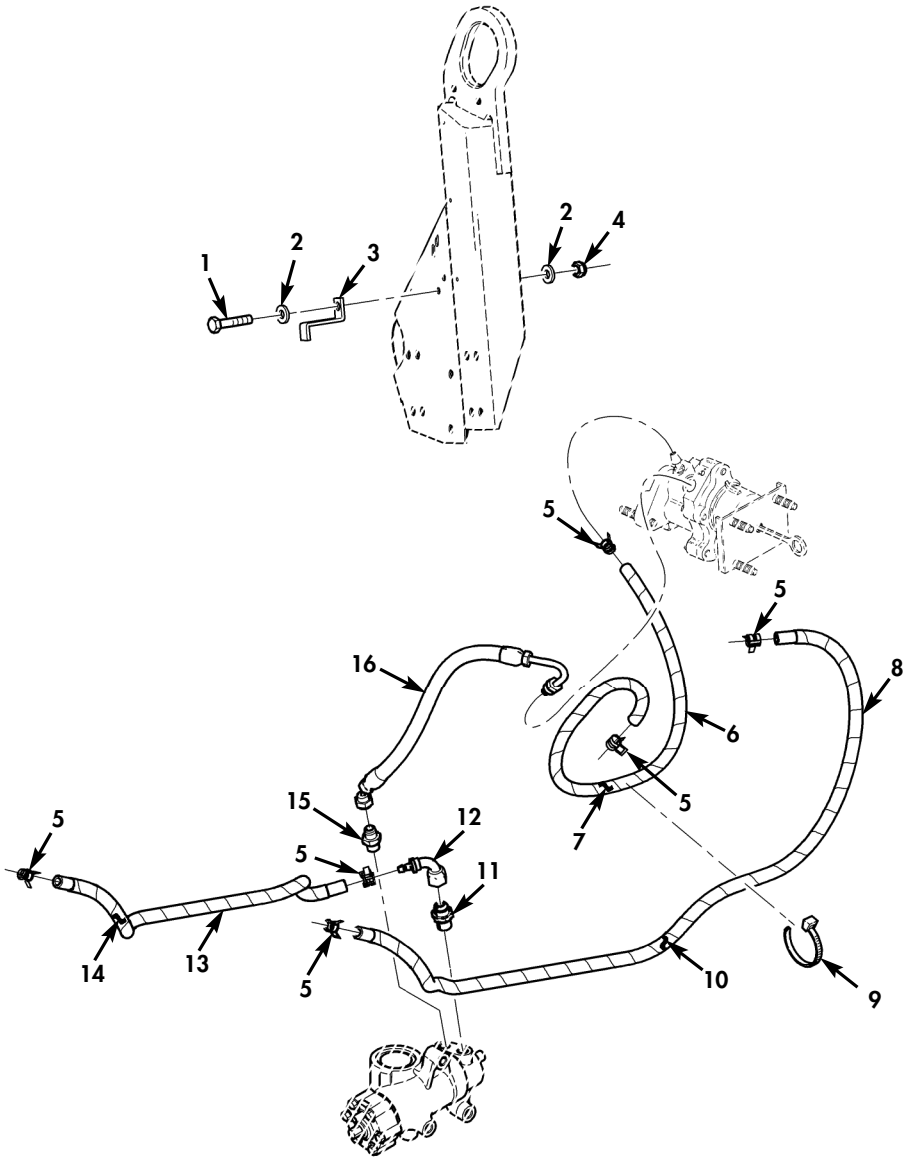

Figure 138C. Power Steering Hoses (Serial Number 246890 and Above).

(1) ITEM NO	(2) SMR CODE	(3) NSN	(4) CAGEC	(5) PART NUMBER	(6) DESCRIPTION AND USABLE ON CODES(UOC)	(7) QTY
					GROUP 1410 HYDRAULIC PUMP OR FLUID MOTOR ASSEMBLY	
					FIG. 138C POWER STEERING HOSES (SERIAL NUMBER 246890 AND ABOVE)	
* 1	PAOZZ	5306002264828	80204	B1821BH031C113N	BOLT,MACHINE 5/16-24 X 1.125..... UOC:TTA,TTT,TT1,UUA,UUU,UU1,UU2	1
* 2	PAOZZ	5310011191024	24617	2436162	WASHER,FLAT 5/16..... UOC:TTA,TTT,TT1,UUA,UUU,UU1,UU2	2
* 3	PAOZZ		34623	6042882	BRACKET,VEHICULAR C..... UOC:TTA,TTT,TT1,UUA,UUU,UU1,UU2	1
* 4	PAOZZ	5310009318167	96906	MS51967-6	NUT,PLAIN,HEXAGON 5/16-18..... UOC:TTA,TTT,TT1,UUA,UUU,UU1,UU2	1
* 5	PAOZZ	5340014732692	34623	6008528	CLAMP,LOOP..... UOC:TTA,TTT,TT1,UUA,UUU,UU1,UU2	6
* 6	MOOZZ		34623	6043145-32IN	HOSE ASSEMBLY,NONME POWER STEERING GEAR TO HYDRO-BOOST,MAKE FROM HOSE P/N 5741209,32 INCHES LONG..... UOC:TTA,TTT,TT1,UUA,UUU,UU1,UU2	1
* 7	MOOZZ		34623	6037172-35IN	TUBING,PLASTIC SPIR MAKE FROM TUBING,PLASTIC P/N 6037172,35 INCHES LONG..... UOC:TTA,TTT,TT1,UUA,UUU,UU1,UU2	1
* 8	MOOZZ		34623	6043147-60IN	HOSE ASSEMBLY,NONME POWER STEERING GEAR TO OIL COOLER,MAKE FROM HOSE P/N 5741209,60 INCHES LONG..... UOC:TTA,TTT,TT1,UUA,UUU,UU1,UU2	1
* 9	PAOZZ	5975008994606	96906	MS3367-2-0	STRAP,TIEDOWN,ELECT..... UOC:TTA,TTT,TT1,UUA,UUU,UU1,UU2	V
* 10	MOOZZ		34623	6037172-60IN	TUBING,PLASTIC SPIR MAKE FROM TUBING,PLASTIC P/N 6037172,60 INCHES LONG..... UOC:TTA,TTT,TT1,UUA,UUU,UU1,UU2	1
* 11	PAOZZ	4730013592382	01276	GG108-NP08-18	ADAPTER,STRAIGHT,TU..... UOC:TTA,TTT,TT1,UUA,UUU,UU1,UU2	1
* 12	PAOZZ	4730015280977	01276	191321-8-6S	ELBOW,TUBE TO HOSE..... UOC:TTA,TTT,TT1,UUA,UUU,UU1,UU2	1
* 13	MOOZZ		34623	6043146-32IN	HOSE ASSEMBLY,NONME POWER STEERING GEAR TO OIL COOLER,MAKE FROM HOSE P/N 5741209,32 INCHES LONG..... UOC:TTA,TTT,TT1,UUA,UUU,UU1,UU2	1
* 14	MOOZZ		34623	6037172-30IN	TUBING,PLASTIC SPIR MAKE FROM TUBING,PLASTIC P/N 6037172,30 INCHES LONG..... UOC:TTA,TTT,TT1,UUA,UUU,UU1,UU2	1
* 15	PAOZZ	4730015221312	30780	6M16F82EDMX-S	ADAPTER,STRAIGHT,PI..... UOC:TTA,TTT,TT1,UUA,UUU,UU1,UU2	1
* 16	PAOZZ	4720015587665	34623	RCSK23646	HOSE ASSEMBLY ,NONME HYDRO-BOOST TO POWER STEERING GEAR..... UOC:TTA,TTT,TT1,UUA,UUU,UU1,UU2	1

END OF FIGURE

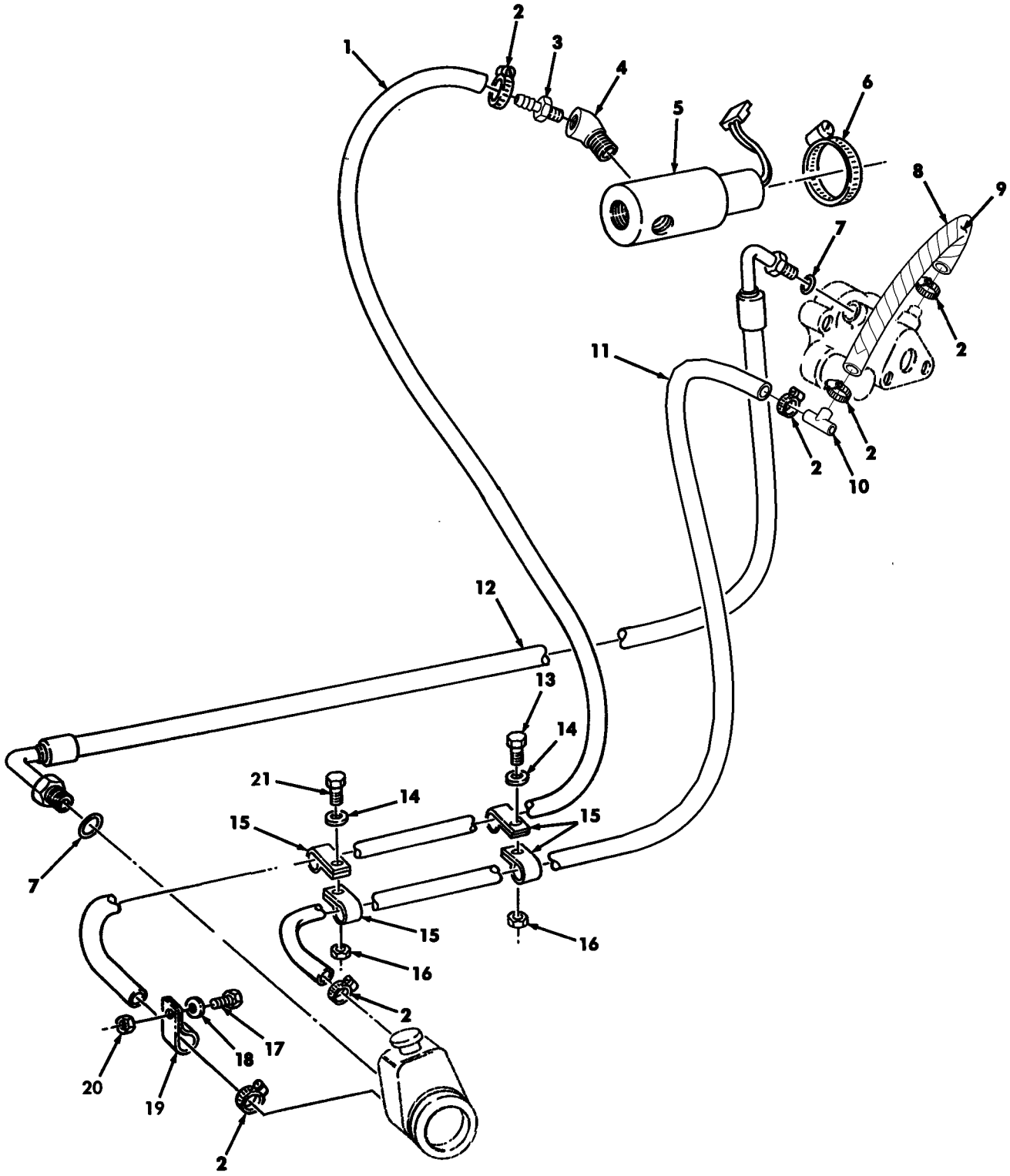

Figure 139. Power Steering and Hydro-Boost Hydraulic Lines and Fittings (Serial Number 196900 and Below).

(1) ITEM NO	(2) SMR CODE	(3) NSN	(4) CAGEC	(5) PART NUMBER	(6) DESCRIPTION AND USABLE ON CODES(UOC)	(7) QTY
					GROUP 1411 HOSES,LINES,FITTINGS	
					FIG. 139 POWER STEERING AND HYDRO-BOOST HYDRAULIC LINES AND FITTINGS(SERIAL NUMBER 196900 AND BELOW)	
* 1	MOOZZ		7X677	GM6210M-27	HOSE MAKE FROM HOSE,P/N 5741209, 27.25 INCHES LONG.....	1
2	PAOZZ	4730000243971	19207	12339884-1	CLAMP,HOSE.....	6
3	PAOZZ	4730014816278	19207	12460305	ADAPTER,STRAIGHT PI.....	1
4	PAOZZ	4730009115707	7X677	454097	ELBOW,PIPE.....	1
5	PAOZZ	4810011925817	34623	12339982	VALVE,SOLENOID.....	1
6	PAOZZ	4730002043491	35708	HS32	CLAMP,HOSE.....	1
7	PAOZZ	5331005806586	34623	12340395	O-RING.....	2
* 8	MOOZZ		7X677	GM6210M-8	HOSE NONME MAKE FROM HOSE,P/N 5741209, 8 INCHES LONG.....	1
9	MOOZZ		34623	12469440-4	WRAP,SPIRAL MAKE FROM SPIRAL WRAP P/N B47287-II-1/2,6 INCHES LONG.....	1
10	PAOZZ	4730014091204	34623	12447077	TEE,HOSE.....	1
* 11	MOOZZ		7X677	GM6210-40	HOSE MAKE FROM HOSE P/N 5741209,40 INCHES LONG.....	1
12	PAOZZ	4720012123531	19207	12338957	HOSE ASSEMBLY,NONME.....	1
13	PAOZZ	5305000687837	80204	B1821BH025C063N	SCREW,CAP,HEXAGON H 1/4-20 X 5/8...	1
14	PAOZZ	5310008094058	96906	MS27183-10	WASHER,FLAT 1/4.....	2
15	PAOZZ	5340000881254	96906	MS21333-104	CLAMP,LOOP.....	4
16	PAOZZ	5310000614650	96906	M45913/3-4CG8C	NUT,SELF-LOCKING,HE 1/4-20.....	2
* 17	PAOZZ	5305005829501	80045	4201-87-23	SCREW,CAP HEXAGON H #10-32 X 1/2...	1
18	PAOZZ	5310013611163	24617	9417373	WASHER,FLAT #10.....	1
19	PAOZZ	5340009899222	80205	MS21333-74	CLAMP,LOOP.....	1
20	PAOZZ	5310001249265	72582	271169	NUT,PLAIN ASSEMBLED #10-32.....	1
21	PAOZZ	5305002253843	80204	B1821BH025C100N	BOLT,MACHINE 1/4-20 X 1.00.....	1

END OF FIGURE

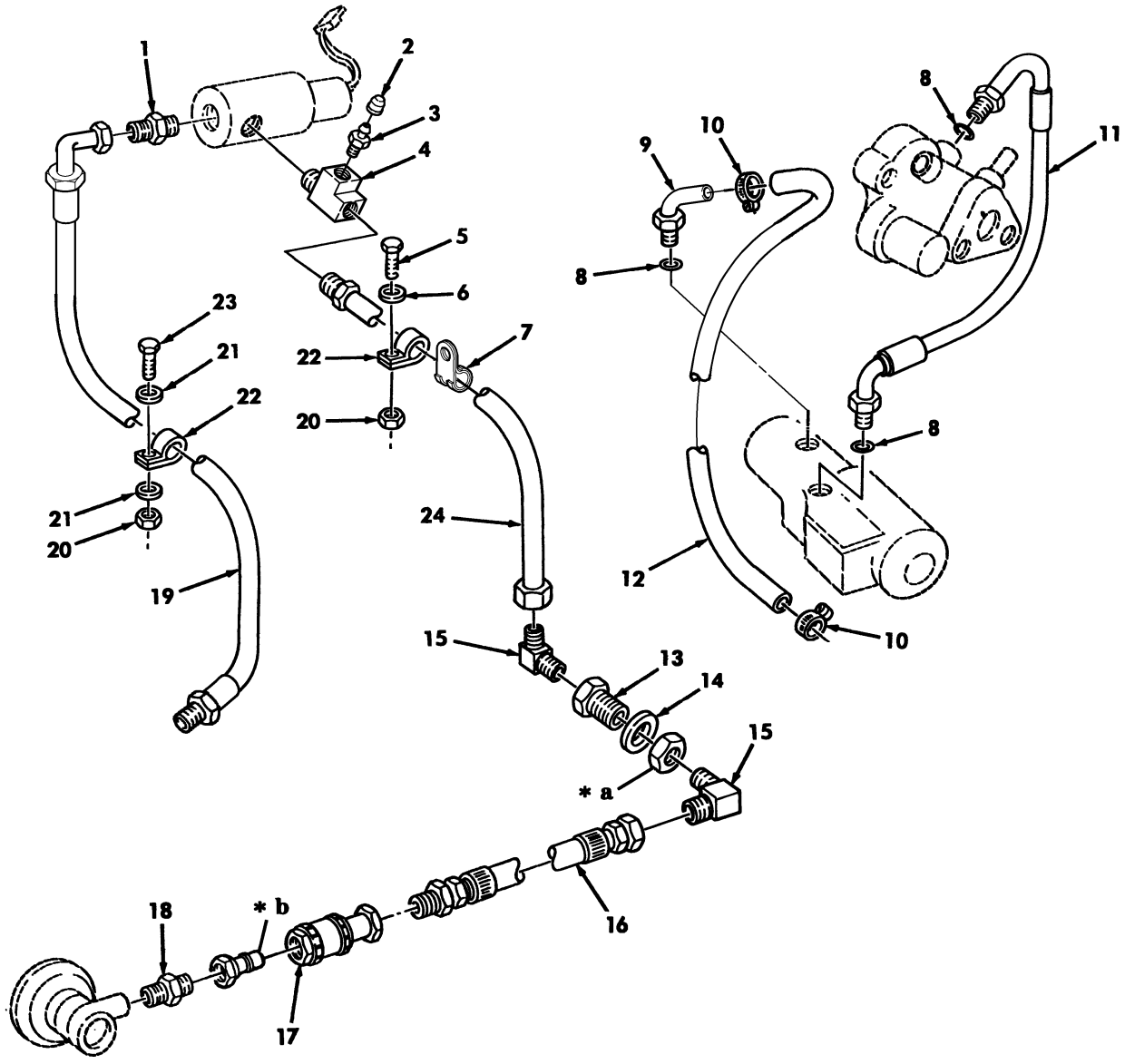

✱ **a** PART OF ITEM 13
✱ **b** PART OF ITEM 17

Figure 140. Power Steering Oil Cooler, Hydro-Boost, and Fan Clutch Hydraulic Lines and Fittings (Sheet 1 of 2).

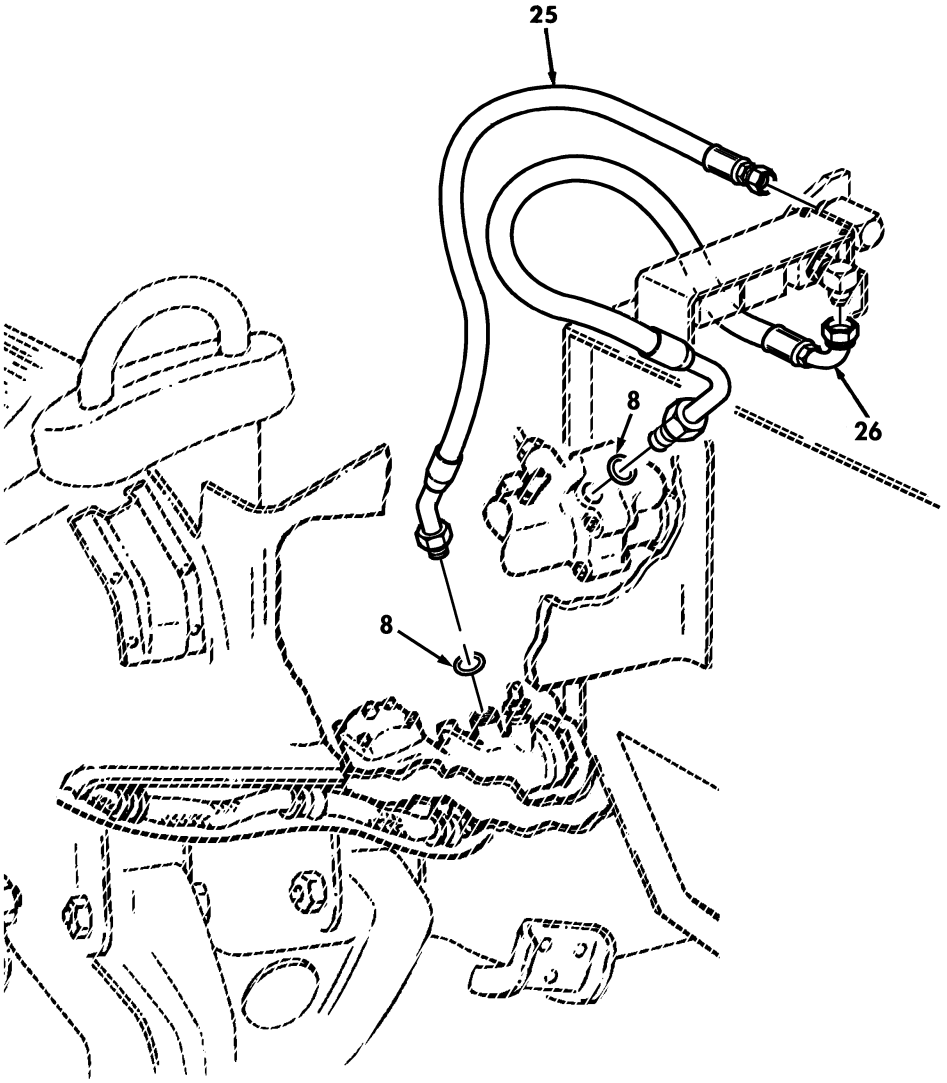

Figure 140. Power Steering Oil Cooler, Hydro-Boost, and Fan Clutch Hydraulic Lines and Fittings (Sheet 2 of 2).

(1) ITEM NO	(2) SMR CODE	(3) NSN	(4) CAGEC	(5) PART NUMBER	(6) DESCRIPTION AND USABLE ON CODES(UOC)	(7) QTY
					GROUP 1411 HOSES,LINES,FITTINGS	
					FIG. 140 POWER STEERING OIL COOLER, HYDRO-BOOST,AND FAN CLUTCH HYDRAULIC LINES AND FITTINGS	
1	PAOZZ	4730014886433	81343	SAE J514	ADAPTER,STRAIGHT TU.....	1
2	PAOZZ	5340014734031	34623	12469217	CAP,PROTECTIVE,DUST.....	1
3	PAOZZ	4820014733580	34623	12469216	VALVE,BLEEDER,HYDRA.....	1
4	PAOZZ	4730014918047	34623	12469215	TEE,PIPE.....	1
5	PAOZZ	5305000687837	80204	B1821BH025C063N	SCREW,CAP HEXAGON H 1/4-20 x 5/8...	1
6	PAOZZ	5310008094058	96906	MS27183-10	WASHER,FLAT.....	1
7	PAOZZ	5340008546729	96906	MS21333-103	CLAMP,LOOP SERIAL NUMBER 192646 AND BELOW,SEE MWO 9-2320-387-20-1.....	1
* 8	PAOZZ	5331005806586	34623	12340395	O-RING.....	3
9	PAOZZ	4720012094628	34623	12338593	TUBE ASSEMBLY,METAL.....	1
* 10	PAOZZ	4730000243971	19207	12339884-1	CLAMP,HOSE.....	2
* 11	PAOZZ	4720012131574	16717	FB9778-01	HOSE ASSEMBLY,NONME..... UOC:XAA	1
12	MOOZZ		19207	12338330-12	HOSE MAKE FROM HOSE P/N 5590025,... 36 INCHES LONG.....	1
13	PAOZZ	4730008975497	79470	W21204	COUPLING,PIPE 3/4.....	1
14	PAOZZ	5310008098533	96906	MS27183-23	WASHER,FLAT 3/4.....	1
* 15	PAOZZ	4730003663011	79470	49X4X4	ELBOW,PIPE TO TUBE.....	2
16	PAOZZ	4720013943747	19207	12338591-1	HOSE ASSEMBLY,NONE.....	1
17	PAOZZ	4730013990241	34623	12342947	COUPLING,HALF QUICK.....	1
18	PAOZZ	4730002783721	81343	2-2 130137B	NIPPLE,PIPE.....	1
19	PAOZZ	4720014886220	19207	12469225	HOSE ASSEMBLY,NONME.....	1
* 20	PAOZZ	5310000614650	96906	M45913/3-4CG8C	NUT,SELF-LOCKING 1/4-20.....	2
21	PAOZZ	5310011023270	24617	2436161	WASHER,FLAT 1/4.....	2
* 22	PAOZZ	5340000881254	80205	MS21333-104	CLAMP,LOOP.....	2
23	PAOZZ	5305002253842	80204	B1821BH025C113N	SCREW,CAP,HEXAGON H 1/4-20 x 1.125.	1
24	PAOZZ	4720014703076	19207	12469061	HOSE ASSEMBLY,NONME.....	1
* 25	PAOZZ	4720014850104	01276	FK3727GGJ0324AA	HOSE ASSEMBLY,NONME..... UOC:XAA	1
26	PAOZZ	4720014849983	01276	FZ178GG0104225AA	HOSE ASSEMBLY,NONME..... UOC:XBB	1

END OF FIGURE

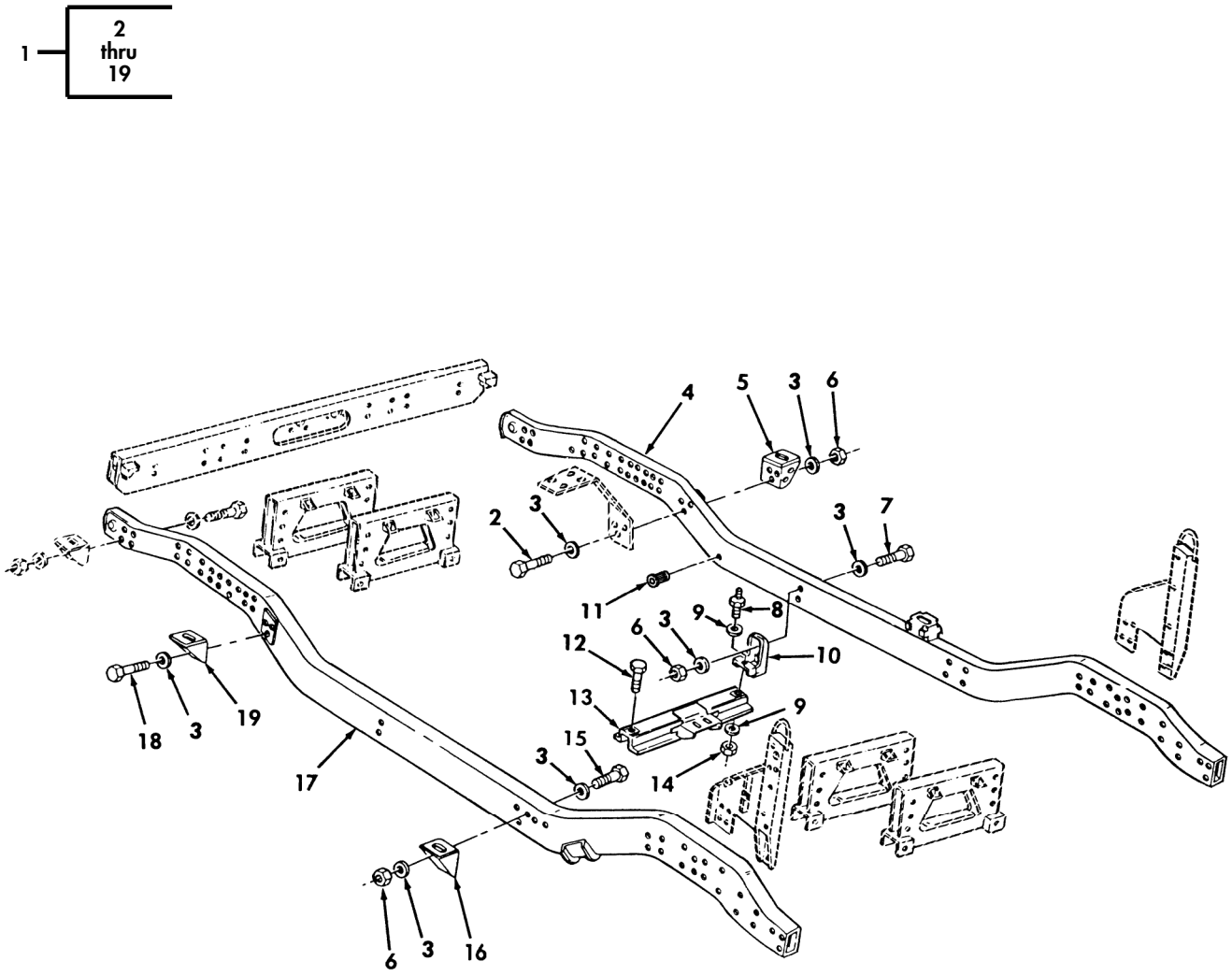

Figure 141. Frame Assembly, Body Mount Brackets, and Transmission Crossmembers (Serial Number 299999 and Below).

(1) ITEM NO	(2) SMR CODE	(3) NSN	(4) CAGEC	(5) PART NUMBER	(6) DESCRIPTION AND USABLE ON CODES(UOC)	(7) QTY
					GROUP 15 FRAME,TOWING ATTACHMENTS, DRAWBARS AND ARTICULATION SYSTEM	
					1501 FRAME ASSEMBLY	
					FIG. 141 FRAME ASSEMBLY,BODY MOUNT BRACKETS,AND TRANSMISSION CROSSMEMBERS (SERIAL NUMBER 299999 AND BELOW)	
1	XDHHH		34623	RCSK17197	FRAME ASSEMBLY..... UOC:XBB	1
1	XDHHH		34623	RCSK17197-1	FRAME ASSEMBLY..... UOC:XAA	1
1	XDHHH		34623	5934936	FRAME ASSEMBLY NON ARMOR..... UOC:TTT,UUU	1
1	XDHHH		34623	6015540	FRAME ASSEMBLY ARMOR..... UOC:TTT,UUU	1
2	PAFZZ	5305007122082	80204	B1821BH050C475N	.SCREW,CAP HEXAGON H 1/2-13 X 4.75.	3
3	PAFZZ	5310011211703	06032	2310-0143-001	.WASHER,FLAT 1/2.....	27
4	PBHZZ	2510014624978	19207	12469402-2	.FRAME SECTION,STRUC L.H..... UOC:XBB	1
4	PBHZZ	2510014329896	34623	5934832B1	.FRAME SECTION,STRUC L.H..... UOC:XAA	1
4	PBHZZ	2510015269137	34623	5934835	.FRAME SECTION,STRUC L.H.,NON ARMOR UOC:TTT,UUU	1
* 4	PBHZZ	2510015602317	34623	6015538B1	.FRAME SECTION,STRUC L.H.,ARMOR.... UOC:TTT,UUU	1
5	PAHZA	5340014332732	34623	5937960	.BRACKET,MOUNTING L.H.....	1
6	PAFZZ	5310004883889	96906	MS51943-39	.NUT,SELF-LOCKING,HE 1/2-13.....	12
7	PAFZZ	5305000711783	80204	B1821BH050C425N	.SCREW,CAP HEXAGON H 1/2-13 X 4.25.	1
8	PAFZZ	5307014503072	19207	12447177	.STUD,SHOULDERED.....	1
9	PAFZZ	5310000685285	96906	MS27183-20	.WASHER,FLAT 9/16.....	4
10	PFFZZ	2590011860863	19207	12338185	.BRACKET,VEHICULAR C.....	2
11	PFFZZ	5325014090211	78276	ATS2-813	.INSERT,SCREW THREAD.....	1
12	PAFZZ	5305007167680	80204	B1821BH056C150N	.SCREW,CAP HEXAGON H 9/16-12 X 1.50	1
13	PAFZZ	2510014124969	34623	12447053	.FRAME SECTION,STRUC.....	1
14	PAFZZ	2510000443342	19204	8712289-5	.NUT,SELF-LOCKING,HE.....	2
15	PAFZZ	5305007122081	80204	B1821BH050C450N	.SCREW,CAP HEXAGON H 1/2-13 X 4.50.	5
16	PFHZZ	5340014324875	34623	5937399	.BRACKET,MOUNTING R.H.....	1
17	PBHZZ	2510014625010	34623	5934953B1	.FRAME SECTION,STRUC R.H..... UOC:XBB	1
17	PBHZZ	2510014405301	19207	12469404-1	.FRAME SECTION,STRUC R.H..... UOC:XAA	1
17	PBHZZ	2510015259014	34623	5934709	.FRAME SECTION,STRUC R.H.,NON ARMOR UOC:TTT,UUU	1
* 17	PBHZZ	2510015602321	34623	6015539	.FRAME SECTION,STRUC R.H.,ARMOR.... UOC:TTT,UUU	1
18	PAFZZ	5305000712067	80204	B1821BH050C125N	.SCREW,CAP HEXAGON H 1/2-13 X 1.25.	3
19	PAHZA	5340014332735	34623	5937961	.BRACKET,MOUNTING R.H.....	1

END OF FIGURE

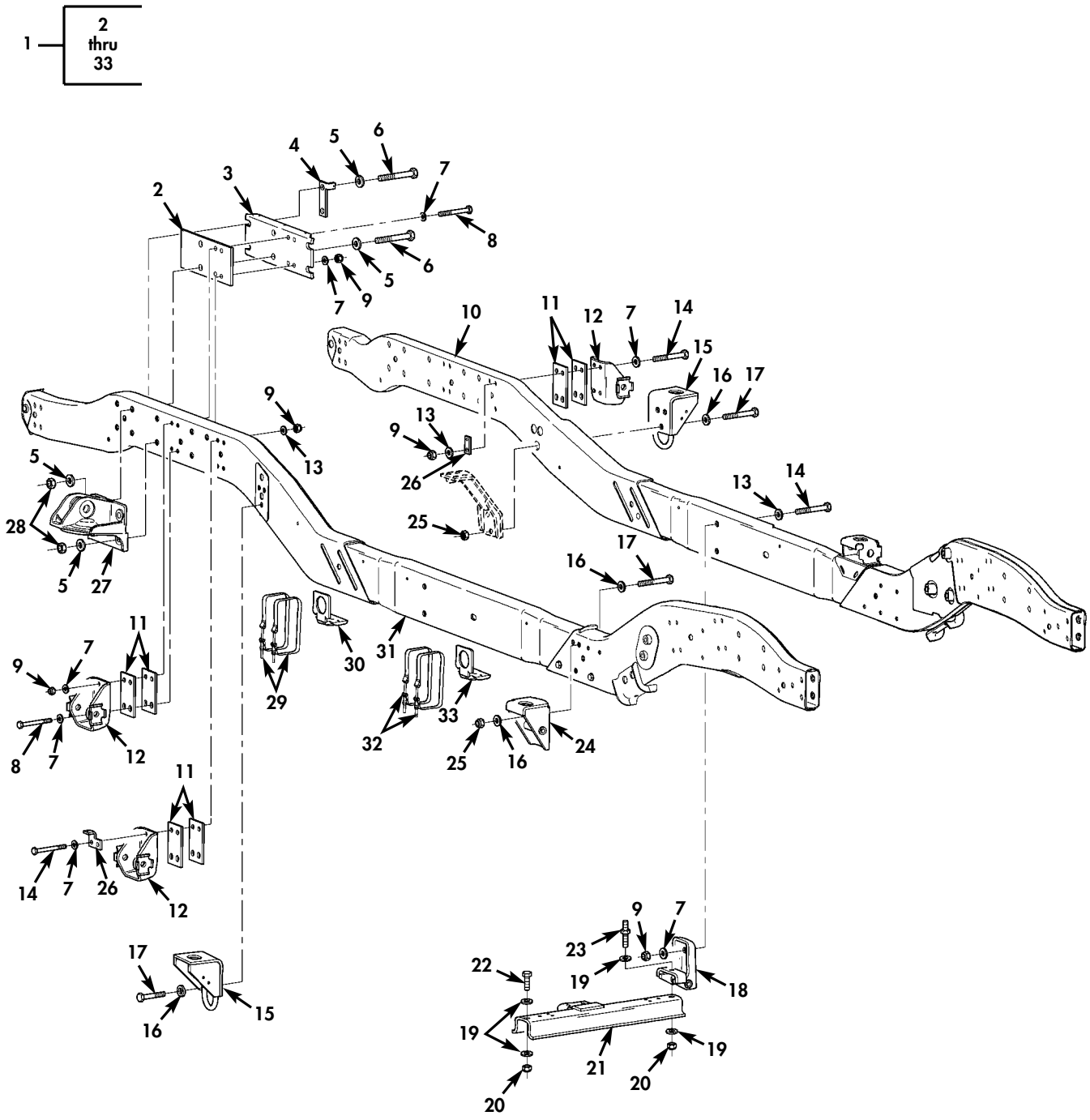

Figure 141A. Frame Assembly, Body Mount Brackets, and Transmission Crossmembers (Serial Number 300000 and Above).

(1) ITEM NO	(2) SMR CODE	(3) NSN	(4) CAGEC	(5) PART NUMBER	(6) DESCRIPTION AND USABLE ON CODES(UOC)	(7) QTY
					GROUP 1501 FRAME ASSEMBLY	
					FIG. 141A FRAME ASSEMBLY,BODY MOUNT BRACKETS,AND TRANSMISSION CROSSMEMBERS (SERIAL NUMBER 300000 AND ABOVE)	
* 1	XDHHH		34623	6030396	FRAME,STRUCTURAL,VE..... UOC:TTA,TTT,TT1,UUA,UUU,UU1,UU2	1
* 2	PAFZZ	5340015663969	34623	6041932	.PLATE,MOUNTING..... UOC:TTA,TTT,TT1,UUA,UUU,UU1,UU2	2
* 3	PAFZZ	5340015660015	34623	6030775	.PLATE,MOUNTING..... UOC:TTA,TTT,TT1,UUA,UUU,UU1,UU2	2
* 4	PFFZZ	2590015659341	34623	6033318	.BRACKET,VEHICULAR C PARKING BRAKE RETURN SPRING,R.H..... UOC:TTA,TTT,TT1,UUA,UUU,UU1,UU2	1
* 5	PAOZZ	5310011474052	23862	2436168	.WASHER,FLAT 3/4..... UOC:TTA,TTT,TT1,UUA,UUU,UU1,UU2	14
* 6	PAFZZ	5305009474361	80204	B1821BH075C475N	.SCREW,CAP,HEXAGON H 3/4-10 X 4.75. UOC:TTA,TTT,TT1,UUA,UUU,UU1,UU2	4
* 7	PAOZZ	5310011211703	24617	2436165	.WASHER,FLAT 1/2..... UOC:TTA,TTT,TT1,UUA,UUU,UU1,UU2	28
* 8	PAFZZ	5305000712081	80204	B1821BH050C450N	.SCREW,CAP,HEXAGON H 1/2-13 X 4.50. UOC:TTA,TTT,TT1,UUA,UUU,UU1,UU2	8
* 9	PAFZZ	5310004883889	96906	MS51943-39	.NUT,SELF-LOCKING,HE 1/2-13..... UOC:TTA,TTT,TT1,UUA,UUU,UU1,UU2	24
* 10	PBHZZ	2510015675316	34623	6038360	.FRAME SECTION,STRUC L.H..... UOC:TTA,TTT,TT1,UUA,UUU,UU1,UU2	1
* 11	PAFZZ	5365015026879	19207	12469415-2	.SPACER,PLATE .125 THICK..... UOC:TTA,TTT,TT1,UUA,UUU,UU1,UU2	8
* 12	PAFZZ	2590012154325	19207	12338245	.BRACKET,VEHICULAR C REAR,UPPER L.H. OR R.H..... UOC:TTA,TTT,TT1,UUA,UUU,UU1,UU2	4
* 13	PAFZZ	5310008664417	19207	10910174-5	.WASHER,FLAT 1/2..... UOC:TTA,TTT,TT1,UUA,UUU,UU1,UU2	10
* 14	PAFZZ	5305000711783	80204	B1821BH050C425N	.SCREW,CAP,HEXAGON H 1/2-13 X 4.25. UOC:TTA,TTT,TT1,UUA,UUU,UU1,UU2	12
* 15	PAFZZ	2590015662568	34623	6030647	.BRACKET,VEHICULAR C L.H..... UOC:TTA,TTT,TT1,UUA,UUU,UU1,UU2	1
* 15	PAFZZ	2590015664410	34623	6030648	.BRACKET,VEHICULAR C R.H..... UOC:TTA,TTT,TT1,UUA,UUU,UU1,UU2	1
* 16	PAFZZ	5310011517347	24617	2436167	.WASHER,FLAT 5/8..... UOC:TTA,TTT,TT1,UUA,UUU,UU1,UU2	12
* 17	PAFZZ	5305007247236	80204	B1821BH063C325N	.SCREW,CAP,HEXAGON H 5/8-11 X 3.25. UOC:TTA,TTT,TT1,UUA,UUU,UU1,UU2	9
* 18	PFFZZ	2590011860863	19207	12338185	.BRACKET,VEHICULAR C..... UOC:TTA,TTT,TT1,UUA,UUU,UU1,UU2	2
* 19	PAFZZ	5310000685285	96906	MS27183-20	.WASHER,FLAT 9/16..... UOC:TTA,TTT,TT1,UUA,UUU,UU1,UU2	4
* 20	PAFZZ	5310000443342	19204	8712289-5	.NUT,SELF-LOCKING,HE 9/16-12..... UOC:TTA,TTT,TT1,UUA,UUU,UU1,UU2	2
* 21	PAFZZ	2510014124969	19207	12447053	.FRAME SECTION,STRUC..... UOC:TTA,TTT,TT1,UUA,UUU,UU1,UU2	1
* 22	PAFZZ	5305007167680	80204	B1821BH056C150N	.SCREW,CAP,HEXAGON H 9/16-12 X 1.50	1

(1) ITEM NO	(2) SMR CODE	(3) NSN	(4) CAGEC	(5) PART NUMBER	(6) DESCRIPTION AND USABLE ON CODES(UOC)	(7) QTY
					UOC:TTA,TTT,TT1,UUA,UUU,UU1,UU2	
* 23	PAFZZ	5307014503072	19207	12447177	.STUD,SHOULDERED.....	1
					UOC:TTA,TTT,TT1,UUA,UUU,UU1,UU2	
* 24	PAFZZ	2590015659310	34623	6031217	.BRACKET,VEHICULAR C.....	1
					UOC:TTA,TTT,TT1,UUA,UUU,UU1,UU2	
* 25	PAFZZ	5310000614651	81349	M45913/1-10CG8C	.NUT,SELF-LOCKING,HE 5/8-11.....	6
					UOC:TTA,TTT,TT1,UUA,UUU,UU1,UU2	
* 26	PAFZZ	2590015662523	34623	6042797	.BRACKET,VEHICULAR C.....	1
					UOC:TTA,TTT,TT1,UUA,UUU,UU1,UU2	
* 27	PFFZZ	2590012484873	19207	12338738	.BRACKET,MOUNTING.....	2
					UOC:TTA,TTT,TT1,UUA,UUU,UU1,UU2	
* 28	PAFZZ	5310004093333	81349	M45913/3-12CG8C	.NUT,SELF-LOCKING,HE 3/4-10.....	8
					UOC:TTA,TTT,TT1,UUA,UUU,UU1,UU2	
* 29	PAFZZ	5340015659385	54646	974HW-1750	.CLAMP,LOOP.....	16
					UOC:TTA,TTT,TT1,UUA,UUU,UU1,UU2	
* 30	PAFZZ	5340015360557	6W728	4660639-000	.BRACKET,MOUNTING.....	8
					UOC:TTA,TTT,TT1,UUA,UUU,UU1,UU2	
* 31	PBHZZ	2510015659382	34623	6038361	.FRAME,STRUCTURAL,VE R.H.....	1
					UOC:TTA,TTT,TT1,UUA,UUU,UU1,UU2	
* 32	PAOZZ	5340015688432	54646	974JG-1500	.BAND,RETAINING.....	4
					UOC:TTA,TTT,TT1,UUA,UUU,UU1,UU2	
* 33	PAOZZ	5340015687843	34623	6043522	.BRACKET,MOUNTING.....	2
					UOC:TTA,TTT,TT1,UUA,UUU,UU1,UU2	

END OF FIGURE

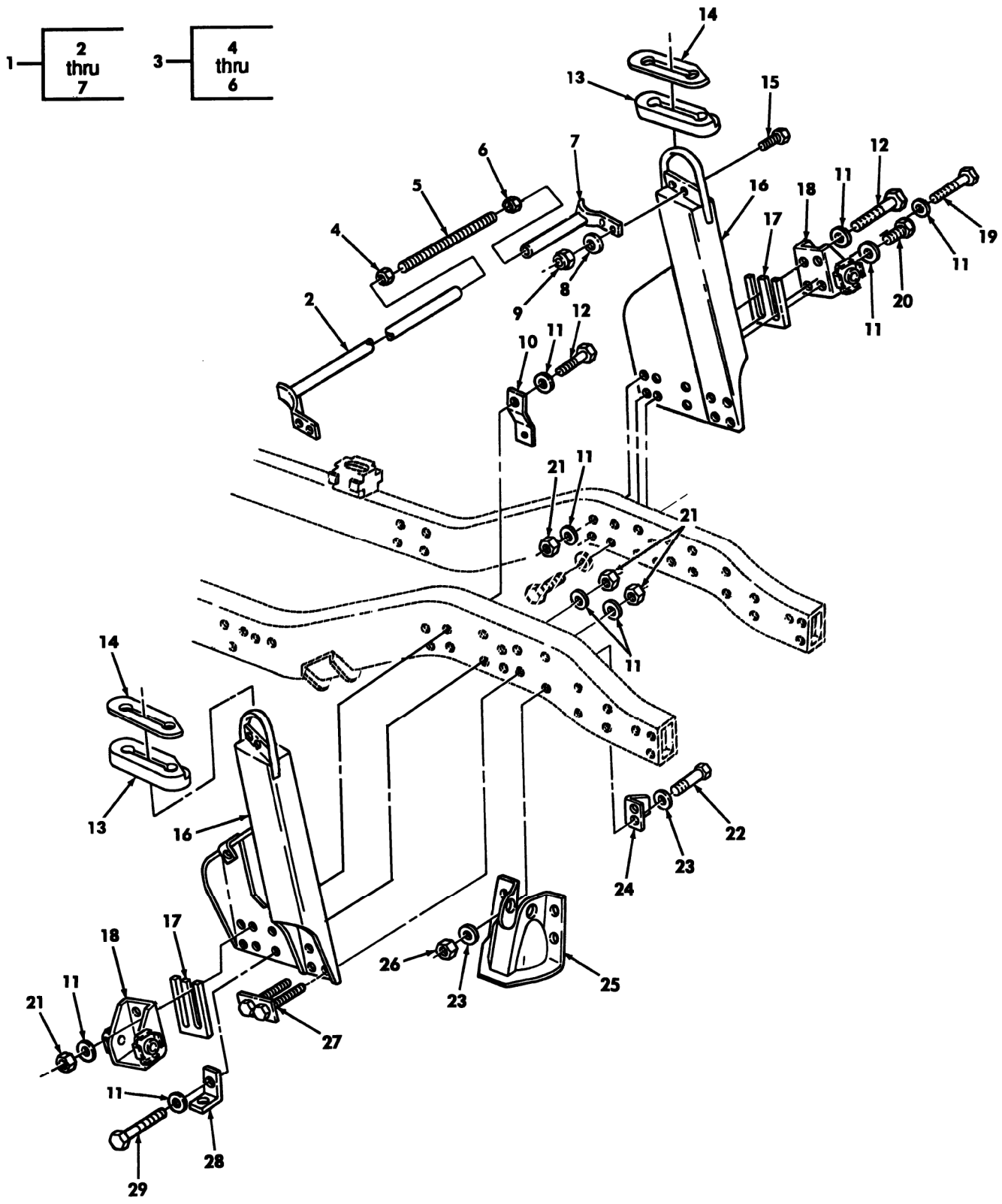

Figure 142. Air Lift Brackets, Front Upper Control Arm Brackets, Front Spring Seats, Crossbrace, and Mounting Hardware (Serial Number 246889 and Below).

(1) ITEM NO	(2) SMR CODE	(3) NSN	(4) CAGEC	(5) PART NUMBER	(6) DESCRIPTION AND USABLE ON CODES(UOC)	(7) QTY
					GROUP 1501 FRAME ASSEMBLY	
					FIG. 142 AIR LIFT BRACKETS,FRONT UPPER CONTROL ARM BRACKETS,FRONT SPRING SEATS,CROSSBRACE,AND MOUNTING HARDWARE(SERIAL NUMBER 246889 AND BELOW)	
1	PAOOO	2510014325134	34623	RCSK17874	CROSSBRACE,AIRLIFT.....	1
2	XAOZZ		34623	RCSK17874-4	.CROSSBRACE 28.75 INCHES.....	1
3	PAOOO	5307014725614	34623	RCSK17872	.STUD,PLAIN.....	1
4	PAOZZ	5310014654525	24617	9418753	..NUT,PLAIN HEXAGON.....	1
* 5	PAOZZ	5306015463599	19207	12469418-1	..ROD,THREADED END.....	1
6	PAOZZ	5310004883889	96906	MS51943-39	..NUT,SELF-LOCKING,HE 1/2-13.....	1
7	XAOZZ		34623	RCSK17874-3	.CROSSBRACE 3.00.....	1
8	PAOZZ	5310002090786	96906	MS35335-33	WASHER,LOCK 1/4.....	4
9	PAOZZ	5310000614650	96906	M45913/3-4CG8C	NUT,SELF,LOCKING,HE 1/4-20.....	4
10	PFFZZ	5340012142089	19207	12338159	BRACKET,MOUNTING.....	1
11	PAFZZ	5310012538948	34623	5593320	WASHER,FLAT.....	39
12	PAFZZ	5305000712078	80204	B1821BH050C375N	SCREW,CAP HEXAGON H 1/2-13 X 3.75 USE WITH .180 TO .360 SHIM PACK.....	12
12	PAFZZ	5305000712079	80204	B1821BH050C400N	SCREW,CAP HEXAGON H 1/2-13 X 4.00 USE WITH .240 AND THICKER SHIM PACK.	10
13	PAOZZ	2540014332545	19207	12460559	INSULATION,ACCOUSTIC L.H.....	1
13	PAOZZ	5325014456437	34623	12460560	INSULATION ACCOUSTIC R.H.....	1
14	PAOZZ	5340014332746	34623	12469024	COVER,ACCESS.....	2
15	PAOZZ	5305002253843	80204	B1821BH025C100N	BOLT,MACHINE 1/4-20 X 1.00.....	4
16	PAFZZ	5340014324878	34623	EX4120	BRACKET,MOUNTING L.H.....	1
16	PAOZZ	5340014332733	34623	EX4121	BRACKET,MOUNTING R.H.....	1
17	PAFZZ	5365015026879	19207	12469415-2	SPACER,PLATE .125.....	1
17	PAFZZ	5365015026900	19207	12469415-1	SPACER,PLATE .250.....	4
18	PFFZZ	5340014559885	34623	RCSK18517-1B1	BRACKET,MOUNTING FRONT.....	2
19	PAFZZ	5305000712077	80204	B1821BH050C350N	SCREW,CAP HEXAGON H 1/2-13 X 3.50 USE WITH UP TO .120 SHIM PACK.....	1
19	PAFZZ	5305000712078	80204	B1821BH050C375N	SCREW,CAP HEXAGON H 1/2-13 X 3.75 USE WITH .180 TO .360 SHIM PACK.....	1
19	PAFZZ	5305000712801	80204	B1821BH050C400N	SCREW,CAP HEXAGON H 1/2-13 X 4.00 USE WITH .420 AND THICKER SHIM PACK.	1
20	PAFZZ	5305000712070	80204	B1821BH050C175N	SCREW,CAP HEXAGHON H 1/2-13 X 1.75.	1
21	PAFZZ	5310004883889	96906	MS51943-39	NUT,SELF-LOCKING,HE 1/2-13.....	19
22	PAFZZ	5305009474358	80204	B1821BH075C400N	SCREW,CAP HEXAGON H 3/4-10 X 4.00..	8
23	PAOZZ	5310011474052	24617	2436168	WASHER,FLAT.....	16
24	PFFZZ	5340012107966	19207	12338173	BRACKET,ANGLE.....	1
25	PAFZZ	2540011877034	19207	12338191-1	SEAT,SPRING,VEHICUL L.H.,FRONT.....	1
25	PAFZZ	2540011883239	19207	12338191-2	SEAT,SPRING VEHICUL R.H.,FRONT.....	1
26	PAFZZ	5310004093333	96906	MS51943-45	NUT,SELF-LOCKING,HE 3/4-10.....	8
27	PAFZA	5340014570003	34623	6009794	BRACKET,MOUNTING REAR,USE WITH .240 AND THICKER SHIM PACK.....	2
27	PAFZA	5340014569885	34623	6009792	BRACKET,MOUNTING FRONT,USE WITH SHIM PACK UP TO .180 THICK.....	2
28	PFFZZ	5340011902248	19207	12338170	BRACKET,ANGLE.....	2
29	PAFZZ	5306011867128	7X677	9427162	BOLT,MACHINE 1/2-13 X 3.75.....	4

END OF FIGURE

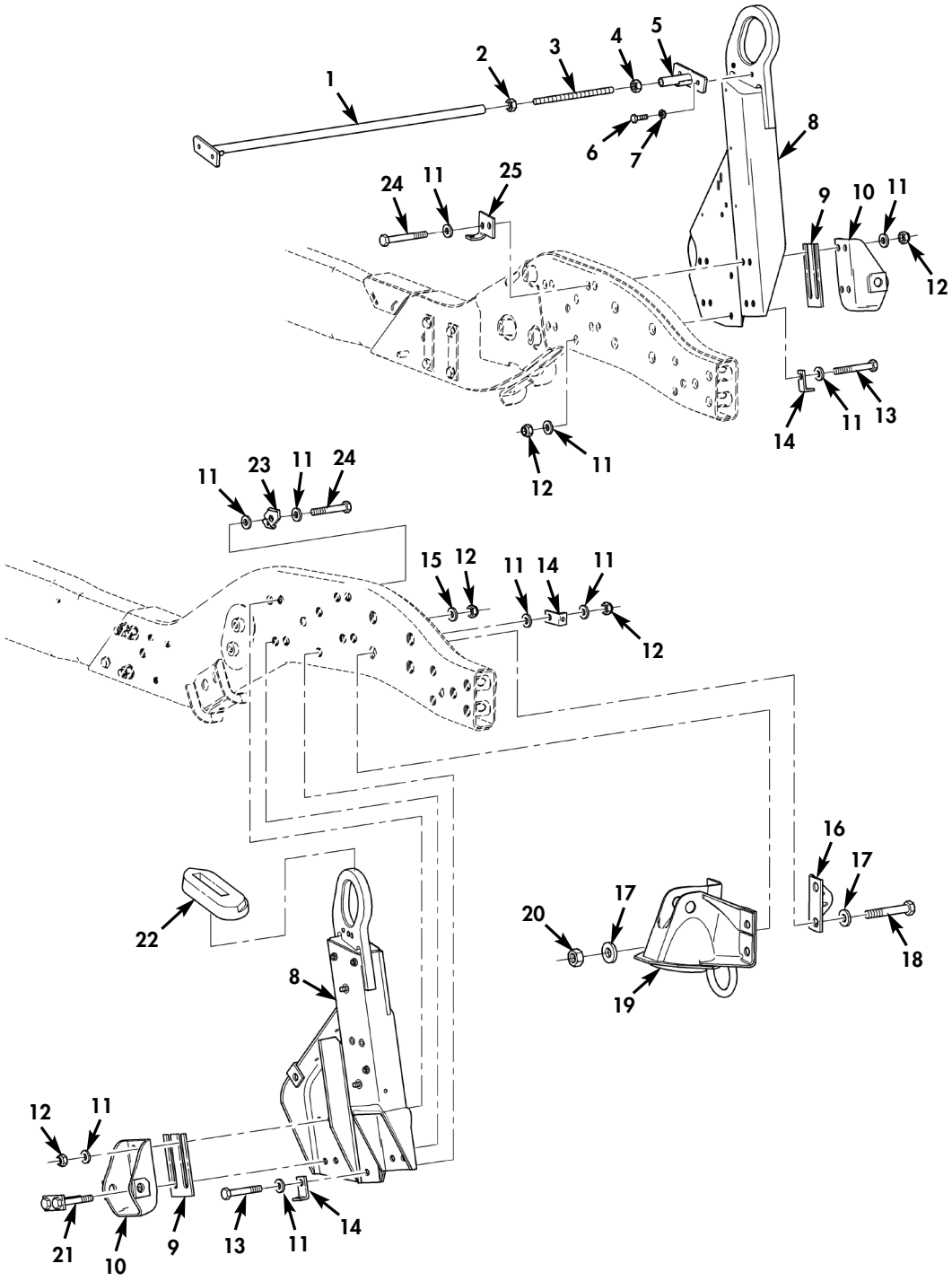

Figure 142A. Air Lift Brackets, Front Upper Control Arm Brackets, Front Spring Seats, Crossbrace, and Mounting Hardware (Serial Number 246890 and Above).

(1) ITEM NO	(2) SMR CODE	(3) NSN	(4) CAGEC	(5) PART NUMBER	(6) DESCRIPTION AND USABLE ON CODES(UOC)	(7) QTY
					GROUP 1501 FRAME ASSEMBLY	
					FIG.142A AIR LIFT BRACKETS,FRONT UPPER CONTROL ARM BRACKETS,FRONT SPRING SEATS,CROSSBRACE,AND MOUNTING HARDWARE(SERIAL NUMBER 246890 AND ABOVE)	
* 1	PAOZZ	2510015663852	34623	6031568	CROSSBRACE..... UOC:TTA,TTT,TT1,UUA,UUU,UU1,UU2	1
* 2	PAOZZ	5310014654525	24617	9418753	NUT,PLAIN,HEXAGON 1/2-13..... UOC:TTA,TTT,TT1,UUA,UUU,UU1,UU2	1
* 3	PAOZZ	5306015463599	19207	12469418-1	ROD,THREADED END..... UOC:TTA,TTT,TT1,UUA,UUU,UU1,UU2	1
* 4	PAOZZ	5310015013086	81349	M45913/3-8CG8Z	NUT,SELF,LOCKING HE 1/2-13..... UOC:TTA,TTT,TT1,UUA,UUU,UU1,UU2	1
* 5	PAOZZ	5340015659172	34623	6031571	BRACKET,MOUNTING..... UOC:TTA,TTT,TT1,UUA,UUU,UU1,UU2	1
* 6	PAOZZ	5306002264827	80204	B1821BH031C100N	BOLT,MACHINE 5/16-18 X 1.00..... UOC:TTA,TTT,TT1,UUA,UUU,UU1,UU2	4
* 7	PAOZZ	5310011191024	24617	2436162	WASHER,FLAT 5/16..... UOC:TTA,TTT,TT1,UUA,UUU,UU1,UU2	4
* 8	PAFZZ	2590015663551	34623	6030404	BRACKET,VEHICULAR C L.H..... UOC:TTA,TTT,TT1,UUA,UUU,UU1,UU2	1
* 8	PAFZZ	2590015663545	34623	6031708	BRACKET,VEHICULAR C R.H..... UOC:TTA,TTT,TT1,UUA,UUU,UU1,UU2	1
* 9	PAFZZ	5365012097832	19207	12338226-2	SPACER,PLATE 1/4 INCH..... UOC:TTA,TTT,TT1,UUA,UUU,UU1,UU2	V
* 10	PAFZZ	2590012154325	19207	12338245	BRACKET,VEHICULAR C FRONT,UPPER L.H. OR R.H..... UOC:TTA,TTT,TT1,UUA,UUU,UU1,UU2	4
* 11	PAOZZ	5310011211703	24617	2436165	WASHER,FLAT 1/2..... UOC:TTA,TTT,TT1,UUA,UUU,UU1,UU2	22
* 12	PAOZZ	5310004883889	96906	MS51943-39	NUT,SELF-LOCKING,HE 1/2-13..... UOC:TTA,TTT,TT1,UUA,UUU,UU1,UU2	18
* 13	PAFZZ	5305000712078	80204	B1821BH050C375N	SCREW,CAP,HEXAGON H 1/2-13 X 3.75.. UOC:TTA,TTT,TT1,UUA,UUU,UU1,UU2	2
* 14	PFFZZ	5340011902248	19207	12338170	BRACKET,ANGLE..... UOC:TTA,TTT,TT1,UUA,UUU,UU1,UU2	3
* 15	PAFZZ	5310008664417	19207	10910174-5	WASHER,FLAT 1/2..... UOC:TTA,TTT,TT1,UUA,UUU,UU1,UU2	8
* 16	PAFZZ	2590015663934	34623	6043156	BRACKET,VEHICULAR C..... UOC:TTA,TTT,TT1,UUA,UUU,UU1,UU2	1
* 17	PAFZZ	5310011474052	23862	2436168	WASHER,FLAT 3/4..... UOC:TTA,TTT,TT1,UUA,UUU,UU1,UU2	16
* 18	PAFZZ	5305009474358	80204	B1821BH075C400N	SCREW,CAP,HEXAGON H 3/4-10 X 4.00.. UOC:TTA,TTT,TT1,UUA,UUU,UU1,UU2	8
* 19	PAFZZ	2540011877034	19207	12338191-1	SEAT SPRING,VEHICUL L.H..... UOC:TTA,TTT,TT1,UUA,UUU,UU1,UU2	1
* 19	PAFZZ	2540011883239	19207	12338191-2	SEAT SPRING,VEHICUL R.H..... UOC:TTA,TTT,TT1,UUA,UUU,UU1,UU2	1
* 20	PAFZZ	5310004093333	81349	M45913/3-12CG8C	NUT,SELF-LOCKING,HE 3/4-10..... UOC:TTA,TTT,TT1,UUA,UUU,UU1,UU2	8

(1) ITEM NO	(2) SMR CODE	(3) NSN	(4) CAGEC	(5) PART NUMBER	(6) DESCRIPTION AND USABLE ON CODES(UOC)	(7) QTY
* 21	PAFZZ	5340014570003	34623	6009794	BRACKET,MOUNTING L.H.,USE WITH .240 AND THICKER SHIM PACK..... UOC:TTA,TTT,TT1,UUA,UUU,UU1,UU2	2
* 21	PAFZZ	5340014569885	34623	6009792	BRACKET,MOUNTING R.H.,USE WITH SHIM PACK UP TO .180 THICK..... UOC:TTA,TTT,TT1,UUA,UUU,UU1,UU2	2
* 22	PAOZZ	2540015550462	34623	6016615	SEAL,COATED,AIRLIFT L.H..... UOC:TTA,TTT,TT1,UUA,UUU,UU1,UU2	1
* 22	PAOZZ	2540015550428	34623	6016616	SEAL,COATED,AIRLIFT R.H..... UOC:TTA,TTT,TT1,UUA,UUU,UU1,UU2	1
* 23	PFFZZ	5340012142089	19207	12338159	BRACKET,MOUNTING..... UOC:TTA,TTT,TT1,UUA,UUU,UU1,UU2	1
* 24	PAFZZ	5305000712079	80204	B1821BH050C400N	SCREW,CAP,HEXAGON H 1/2-13 X 4.00.. UOC:TTA,TTT,TT1,UUA,UUU,UU1,UU2	8
* 25	PAFZZ	2590015659797	34623	6032416	BRACKET,VEHICULAR C..... UOC:TTA,TTT,TT1,UUA,UUU,UU1,UU2	1

END OF FIGURE

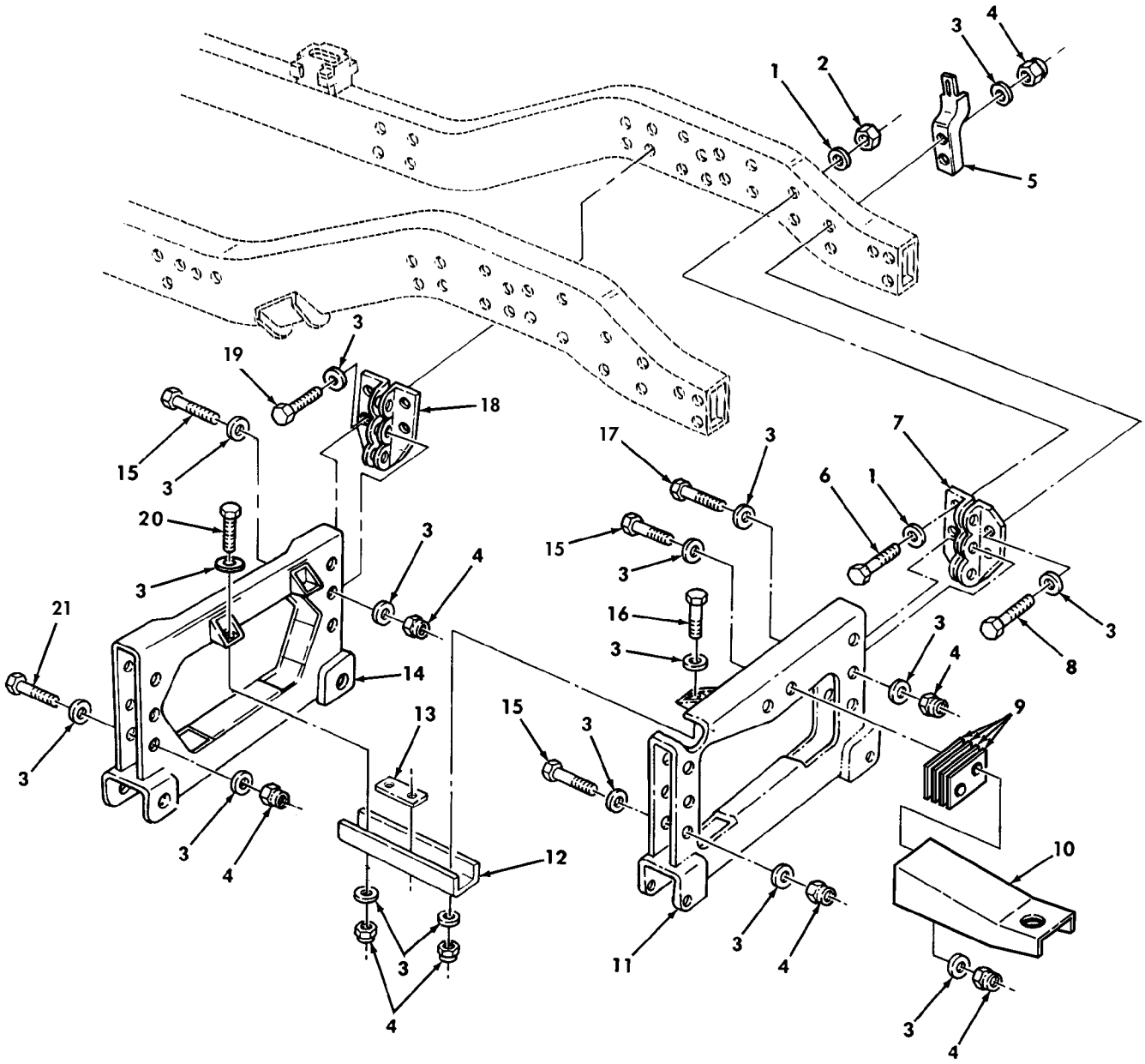

Figure 143. Front Suspension Crossmembers, Related Parts, and Mounting Hardware (Serial Number 299999 and Below).

(1) ITEM NO	(2) SMR CODE	(3) NSN	(4) CAGEC	(5) PART NUMBER	(6) DESCRIPTION AND USABLE ON CODES(UOC)	(7) QTY
					GROUP 1501 FRAME ASSEMBLY	
					FIG. 143 FRONT SUSPENSION CROSS MEMBERS,RELATED PARTS,AND MOUNTING HARDWARE (SERIAL NUMBER 299999 AND BELOW)	
1	PAFZZ	5310012604839	34623	5593312	WASHER,FLAT 3/4.....	8
2	PAFZZ	5310004093333	96906	MS51943-45	NUT,SELF-LOCKING,HE 3/4-10.....	4
3	PAFZZ	5310011211703	24617	2436165	WASHER,FLAT 1/2.....	44
4	PAFZZ	5310004883889	96906	MS51943-39	NUT,SELF-LOCKING,HE 1/2-13.....	22
5	PAFZZ	5340011923414	19207	12338166	BRACKET,MOUNTING.....	5
6	PAFZZ	5305009474358	80204	B1821BH075C400N	SCREW,CAP,HEXAGON H 3/4-10 X 4.00..	4
7	PFFZZ	2510011890891	34623	5579620	BRACKET,CROSSMEMBER FRONT SUSPENSION, L.H. FRONT.....	1
7	PFFZZ	2510011877031	34623	5579621	BRACKET,CROSSMEMBER FRONT SUSPENSION, R.H. FRONT.....	1
8	PAFZZ	5305000712077	80204	B1821BH050C350N	SCREW,CAP,HEXAGON H 1/2-13 X 3.50..	4
9	PFFZA	5365014729876	34623	RCSK18060	SPACER,PLATE.....	4
10	PFFZZ	5340014324869	34623	RCSK17191	BRACKET,MOUNTING.....	1
11	PAFZZ	2510014663752	19207	12460283	FRAME,STRUCTURAL,VE FRONT FORWARD..	1
12	PFFZZ	5340014324876	34623	6002224	BRACKET,DOUBLE ANGL L.H.....	1
12	PFFZZ	5340014378751	34623	EC12460253B1	BRACKET,DOUBLE ANGL R.H.....	1
13	PFFZZ	5340014324877	34623	EC12460245B1	PLATE,MOUNTING FRONT.....	2
14	PAFZZ	2510014138045	19207	12460285	FRAME SECTION,STRUC.....	1
15	PAFZZ	5305000712075	80204	B1821BH050C300N	SCREW,CAP,HEXAGON H 1/2-13 X 3.00..	8
16	PAFZZ	5305000712067	80204	B1821BH050C125N	SCREW,CAP,HEXAGON H 1/2-13 X 1.25..	2
17	PAFZZ	5305000712074	80204	B1821BH050C275N	SCREW,CAP,HEXAGON H 1/2-13 X 2.75..	4
18	PFFZZ	2510011856647	34623	12338155-1	BRACKET,CROSSMEMBER L.H. REAR.....	1
18	PFFZZ	2510011856648	34623	12338155-2	BRACKET,CROSSMEMBER R.H. REAR.....	1
19	PAFZZ	5305000712078	80204	B1821BH050C375N	SCREW,CAP,HEXAGON H 1/2-13 X 3.75..	4
20	PAFZZ	5305000712069	80204	B1821BH050C150N	SCREW,CAP,HEXAGON H 1/2-13 X 1.50..	2
21	PAFZZ	5305000712076	80204	B1821BH050C325N	SCREW,CAP,HEXAGON H 1/2-13 X 3.25..	2

END OF FIGURE

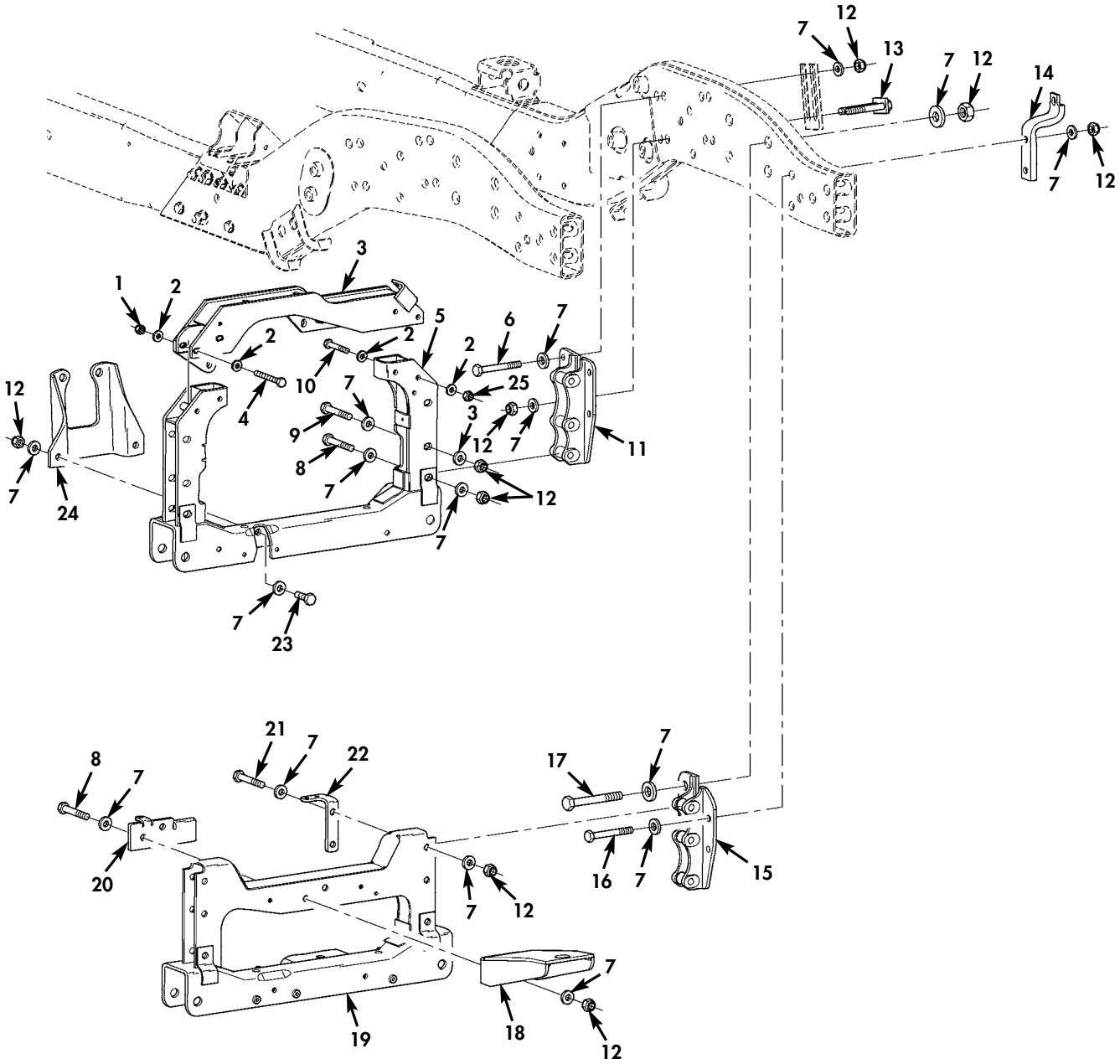

Figure 143A. Front Suspension Crossmembers, Related Parts, and Mounting Hardware (Serial Number 300000 and Above).

(1) ITEM NO	(2) SMR CODE	(3) NSN	(4) CAGEC	(5) PART NUMBER	(6) DESCRIPTION AND USABLE ON CODES(UOC)	(7) QTY
					GROUP 1501 FRAME ASSEMBLY	
					FIG. 143A FRONT SUSPENSION CROSSMEMBERS, RELATED PARTS,AND MOUNTING HARDWARE (SERIAL NUMBER 300000 AND ABOVE)	
* 1	PAOZZ	5310009359021	96906	MS51943-35	NUT,SELF-LOCKING,HE 3/8-16..... UOC:TTA,TTT,TT1,UUA,UUU,UU1,UU2	3
* 2	PAOZZ	5310014124013	24617	2436163	WASHER,FLAT 3/8..... UOC:TTA,TTT,TT1,UUA,UUU,UU1,UU2	8
* 3	PAOZZ	2510015660773	34623	6033365	FRAME,SECTION,STRUC..... UOC:TTA,TTT,TT1,UUA,UUU,UU1,UU2	1
* 4	PAOZZ	5305007813927	80204	B1821BH038C350N	SCREW,CAP,HEXAGON H 3/8-16 X 3.50.. UOC:TTA,TTT,TT1,UUA,UUU,UU1,UU2	3
* 5	PAFZZ	2510015659762	34623	6031640	FRAME,SECTION,STRUC FRONT,REAR..... UOC:TTA,TTT,TT1,UUA,UUU,UU1,UU2	1
* 6	PAFZZ	5305000712079	80204	B1821BH050C400N	SCREW,CAP,HEXAGON H 1/2-13 X 4.00.. UOC:TTA,TTT,TT1,UUA,UUU,UU1,UU2	2
* 7	PAOZZ	5310011211703	24617	2436165	WASHER,FLAT 1/2..... UOC:TTA,TTT,TT1,UUA,UUU,UU1,UU2	64
* 8	PAOZZ	5305000712076	80204	B1821BH050C325N	SCREW,CAP,HEXAGON H 1/2-13 X 3.25.. UOC:TTA,TTT,TT1,UUA,UUU,UU1,UU2	6
* 9	PAFZZ	5305000712075	80204	B1821BH050C300N	SCREW,CAP,HEXAGON H 1/2-13 X 3.00.. UOC:TTA,TTT,TT1,UUA,UUU,UU1,UU2	4
* 10	PAFZZ	5305007813928	80204	B1821BH038C400N	SCREW,CAP,HEXAGON H 3/8-16 X 4.00.. UOC:TTA,TTT,TT1,UUA,UUU,UU1,UU2	1
* 11	PAFZZ	2510011856647	19207	12338155-1	BRACKET,CROSSMEMBER L.H..... UOC:TTA,TTT,TT1,UUA,UUU,UU1,UU2	1
* 11	PAFZZ	2510011856648	19207	12338155-2	BRACKET,CROSSMEMBER R.H..... UOC:TTA,TTT,TT1,UUA,UUU,UU1,UU2	1
* 12	PAOZZ	5310004883889	96906	MS51943-39	NUT,SELF-LOCKING,HE 1/2-13..... UOC:TTA,TTT,TT1,UUA,UUU,UU1,UU2	28
* 13	PAFZZ	5340014570003	34623	6009794	BRACKET,MOUNTING L.H.,USE WITH .240 AND THICKER SHIM PACK..... UOC:TTA,TTT,TT1,UUA,UUU,UU1,UU2	2
* 13	PAFZZ	5340014569885	34623	6009792	BRACKET,MOUNTING R.H.,USE WITH SHIM PACK UP TO .180 THICK..... UOC:TTA,TTT,TT1,UUA,UUU,UU1,UU2	2
* 14	PAFZZ	5340014847646	19207	12447051	BRACKET,MOUNTING..... UOC:TTA,TTT,TT1,UUA,UUU,UU1,UU2	2
* 15	PAFZZ	2510011890891	19207	12338149-1	BRACKET,CROSSMEMBER L.H..... UOC:TTA,TTT,TT1,UUA,UUU,UU1,UU2	1
* 15	PAFZZ	2510011877031	19207	12338149-2	BRACKET,CROSSMEMBER R.H..... UOC:TTA,TTT,TT1,UUA,UUU,UU1,UU2	1
* 16	PAFZZ	5305000712077	80204	B1821BH050C350N	SCREW,CAP,HEXAGON H 1/2-13 X 3.50.. UOC:TTA,TTT,TT1,UUA,UUU,UU1,UU2	4
* 17	PAFZZ	5305009474358	80204	B1821BH075C400N	SCREW,CAP,HEXAGON H 3/4-10 X 4.00.. UOC:TTA,TTT,TT1,UUA,UUU,UU1,UU2	4
* 18	PAFZZ	2590015663754	34623	6039565	BRACKET,VEHICULAR C RADIATOR SUPPORT..... UOC:TTA,TTT,TT1,UUA,UUU,UU1,UU2	1
* 19	PAFZZ	2510015659285	34623	6031502	FRAME,STRUCTURAL,VE FRONT..... UOC:TTA,TTT,TT1,UUA,UUU,UU1,UU2	1
* 20	PAOZZ	2590015663013	34623	6043102	BRACKET,VEHICULAR C BRAKE LINE	1

(1) ITEM NO	(2) SMR CODE	(3) NSN	(4) CAGEC	(5) PART NUMBER	(6) DESCRIPTION AND USABLE ON CODES(UOC)	(7) QTY
					MOUNTING.....	
					UOC:TTA,TTT,TT1,UUA,UUU,UU1,UU2	
* 21	PAOZZ	5305000712074	80204	B1821BH050C275N	SCREW,CAP,HEXAGON H 1/2-13 X 2.75..	2
					UOC:TTA,TTT,TT1,UUA,UUU,UU1,UU2	
* 22	PFOZZ	2590015659510	34623	6032372	BRACKET,VEHICULAR C.....	1
					UOC:TTA,TTT,TT1,UUA,UUU,UU1,UU2	
* 23	PAFZZ	5305000712067	80204	B1821BH050C125N	SCREW,CAP,HEXAGON H 1/2-13 X 1.25..	2
					UOC:TTA,TTT,TT1,UUA,UUU,UU1,UU2	
* 24	PAFZZ	5340014328680	34623	6002219	BRACKET,MOUNTING.....	1
					UOC:TTA,TTT,TT1,UUA,UUU,UU1,UU2	
* 25	PAFZZ	5310007610654	96906	MS51967-9	NUT,PLAIN,HEXAGON 3/8-16.....	1
					UOC:TTA,TTT,TT1,UUA,UUU,UU1,UU2	

END OF FIGURE

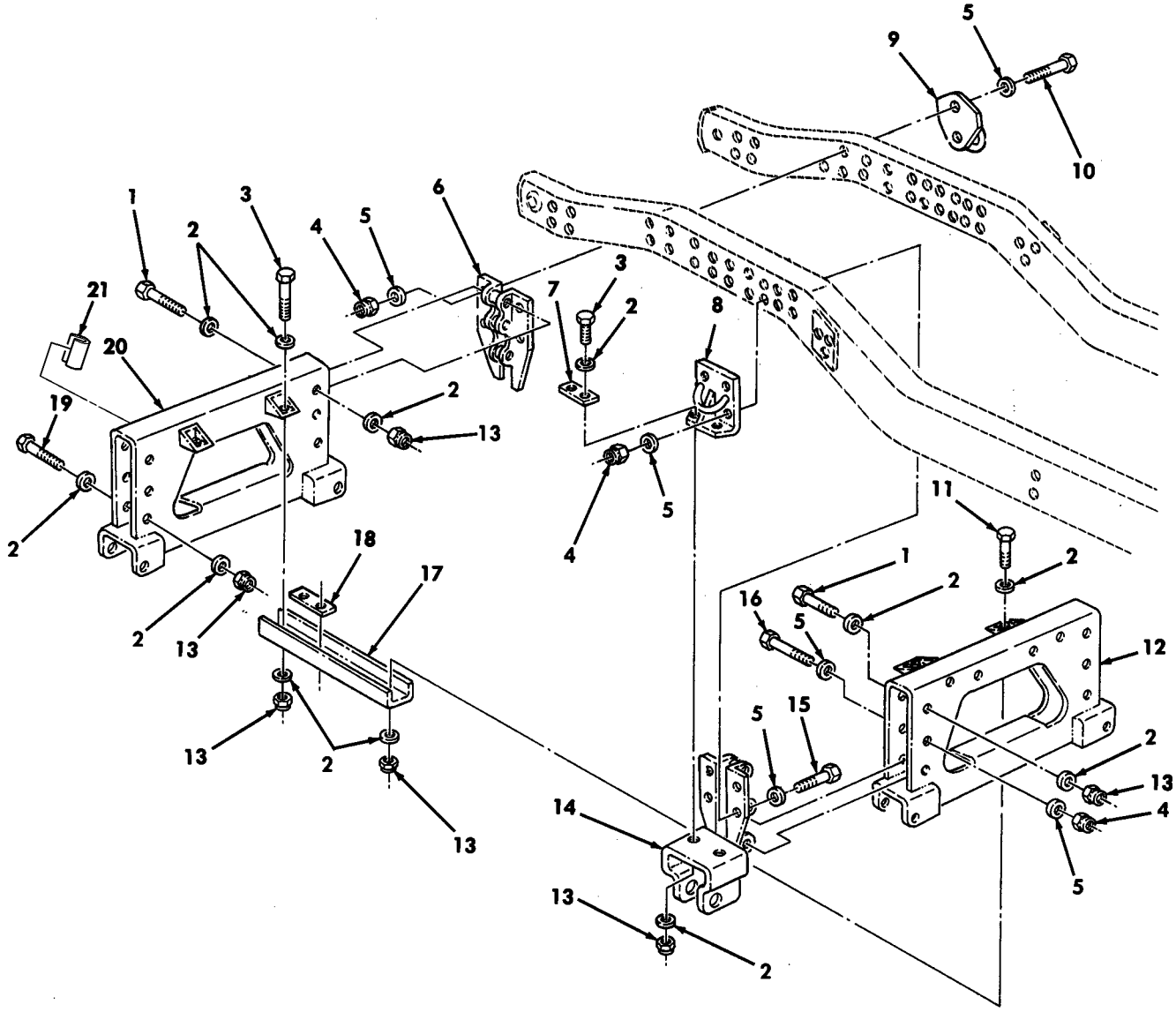

Figure 144. Rear Suspension Crossmembers, Related Parts, and Mounting Hardware (Serial Number 299999 and Below).

(1) ITEM NO	(2) SMR CODE	(3) NSN	(4) CAGEC	(5) PART NUMBER	(6) DESCRIPTION AND USABLE ON CODES(UOC)	(7) QTY
					GROUP 1501 FRAME ASSEMBLY	
					FIG. 144 REAR SUSPENSION CROSS MEMBERS,RELATED PARTS,AND MOUNTING HARDWARE (SERIAL NUMBER 299999 AND BELOW)	
1	PAFZZ	5305000712074	80204	B1821BH050C275N	SCREW,CAP,HEXAGON H 1/2-13 X 2.75..	6
2	PAFZZ	5310011211703	06032	2310-0143-001	WASHER,FLAT 1/2.....	32
3	PAFZZ	5305000712069	80204	B1821BH050C150N	SCREW,CAP,HEXAGON H 1/2-13 X 1.50..	6
4	PAFZZ	5310004093333	96906	MS51943-45	NUT,SELF-LOCKING,HE 3/4-10.....	12
5	PAFZZ	5310011474052	24617	2436168	WASHER,FLAT 3/4.....	24
6	PFFZZ	2510011877033	19207	12338148	FRAME SECTION,STRUC.....	2
7	PFFZZ	5340012097767	19207	12338172	PLATE,MENDING.....	2
8	PFFZZ	5340012042584	19207	12338197	BRACKET,MOUNTING.....	2
9	PFFZZ	5340011867664	19207	12338181	LOOP,STRAP FASTENER.....	2
10	PAFZZ	5305009474359	80204	B1821BH075C425N	SCREW,CAP,HEXAGON H 3/4-10 X 4.25..	4
11	PAFZZ	5305000712067	80204	B1821BH050C125N	SCREW,CAP,HEXAGON H 1/2-13 X 1.25..	2
12	PFFZZ	2510014334421	19207	12460235	FRAME SECTION,STRUC REAR FRONT.....	1
13	PAFZZ	5310004883889	96906	MS51943-39	NUT,SELF-LOCKING,HE 1/2-13.....	16
14	PFFZZ	2510012106941	19207	12338224	BRACKET,SUSPENSION.....	2
15	PAFZZ	5305009474360	80204	B1821BH075C450N	SCREW,CAP,HEXAGON H 3/4-10 X 4.50..	8
16	PAFZZ	5305009474355	80204	B1821BH075C325N	SCREW,CAP,HEXAGON H 3/4-10 X 3.25..	4
17	PFFZZ	5340014328678	34623	6002226	BRACKET,DOUBLE ANGL L.H.....	1
17	PFFZZ	5340014378748	34623	6002227	BRACKET,DOUBLE ANGL R.H.....	1
18	PFFZZ	5340014332743	34623	EC12460236B1	PLATE,MOUNTING REAR.....	2
19	PAFZZ	5305000712075	80204	B1821BH050C300N	SCREW,CAP,HEXAGON H 1/2-13 X 3.00..	4
20	PFFZZ	2510014570949	19207	12460284	FRAME SECTION,STRUC REAR.....	1

END OF FIGURE

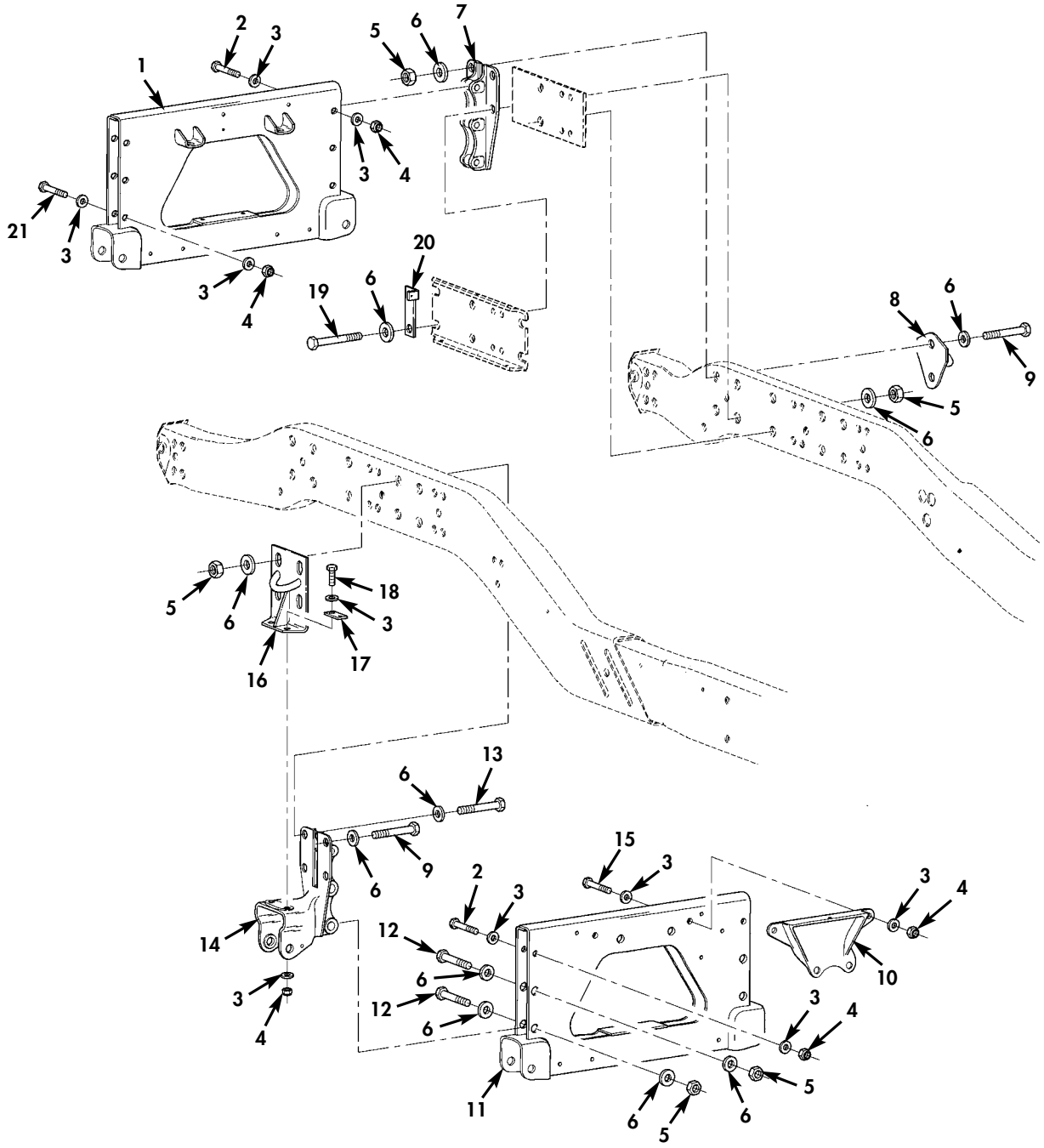

Figure 144A. Rear Suspension Crossmembers, Related Parts, and Mounting Hardware (Serial Number 300000 and Above).

(1) ITEM NO	(2) SMR CODE	(3) NSN	(4) CAGEC	(5) PART NUMBER	(6) DESCRIPTION AND USABLE ON CODES(UOC)	(7) QTY
					GROUP 1501 FRAME ASSEMBLY	
					FIG. 144A REAR SUSPENSION CROSSMEMBERS, RELATED PARTS,AND MOUNTING HARDWARE (SERIAL NUMBER 300000 AND ABOVE)	
* 1	PAFZZ	2510015659624	34623	6042432	FRAME,STRUCTURAL,VE REAR,REAR..... UOC:TTA,TTT,TT1,UUA,UUU,UU1,UU2	1
* 2	PAFZZ	5305000712074	80204	B1821BH050C275N	SCREW,CAP,HEXAGON H 1/2-13 X 2.75.. UOC:TTA,TTT,TT1,UUA,UUU,UU1,UU2	6
* 3	PAOZZ	5310011211703	24617	2436165	WASHER,FLAT 1/2..... UOC:TTA,TTT,TT1,UUA,UUU,UU1,UU2	28
* 4	PAOZZ	5310004883889	96906	MS51943-39	NUT,SELF-LOCKING,HE 1/2-13..... UOC:TTA,TTT,TT1,UUA,UUU,UU1,UU2	14
* 5	PAFZZ	5310004093333	81349	M45913/3-12CG8C	NUT,SELF-LOCKING,HE 3/4-10..... UOC:TTA,TTT,TT1,UUA,UUU,UU1,UU2	20
* 6	PAFZZ	5310011474052	23862	2436168	WASHER,FLAT 3/4..... UOC:TTA,TTT,TT1,UUA,UUU,UU1,UU2	40
* 7	PFFZZ	2510011877033	19207	12338148	FRAME SECTION,STRUC..... UOC:TTA,TTT,TT1,UUA,UUU,UU1,UU2	2
* 8	PFFZZ	5340011867664	19207	12338181	LOOP,STRAP FASTENER..... UOC:TTA,TTT,TT1,UUA,UUU,UU1,UU2	2
* 9	PAFZZ	5305009474359	80204	B1821BH075C425N	SCREW,CAP,HEXAGON H 3/4-10 X 4.25.. UOC:TTA,TTT,TT1,UUA,UUU,UU1,UU2	8
* 10	PAFZZ	5340013017929	19207	12341900	BRACKET,MOUNTING..... UOC:TTA,TTT,TT1,UUA,UUU,UU1,UU2	1
* 11	PFFZZ	2510014334421	19207	12460235	FRAME SECTION,STRUC..... UOC:TTA,TTT,TT1,UUA,UUU,UU1,UU2	1
* 12	PAFZZ	5305009474355	80204	B1821BH075C325N	SCREW,CAP,HEXAGON H 3/4-10 X 3.25.. UOC:TTA,TTT,TT1,UUA,UUU,UU1,UU2	4
* 13	PAFZZ	5305009474360	80204	B1821BH075C450N	SCREW,CAP,HEXAGON H 3/4-10 X 4.50.. UOC:TTA,TTT,TT1,UUA,UUU,UU1,UU2	4
* 14	PFFZZ	2510012106941	19207	12338224	BRACKET,SUSPENSION..... UOC:TTA,TTT,TT1,UUA,UUU,UU1,UU2	2
* 15	PAOZZ	5305000712076	80204	B1821BH050C325N	SCREW,CAP,HEXAGON H 1/2-13 X 3.25.. UOC:TTA,TTT,TT1,UUA,UUU,UU1,UU2	2
* 16	PFFZZ	5340012042584	19207	12338197	BRACKET,MOUNTING..... UOC:TTA,TTT,TT1,UUA,UUU,UU1,UU2	2
* 17	PAFZZ	5340012097767	19207	12338172	PLATE,MENDING..... UOC:TTA,TTT,TT1,UUA,UUU,UU1,UU2	2
* 18	PAFZZ	5305000712069	80204	B1821BH050C150N	SCREW,CAP,HEXAGON H 1/2-13 X 1.50.. UOC:TTA,TTT,TT1,UUA,UUU,UU1,UU2	4
* 19	PAFZZ	5305009474361	80204	B1821BH075C475N	SCREW,CAP,HEXAGON H 3/4-10 X 4.75.. UOC:TTA,TTT,TT1,UUA,UUU,UU1,UU2	4
* 20	PFFZZ	2590015663635	34623	6033320-C	BRACKET,VEHICULAR C PARKING BRAKE RETURN SPRING,L.H..... UOC:TTA,TTT,TT1,UUA,UUU,UU1,UU2	1
* 21	PAFZZ	5305000712075	80204	B1821BH050C300N	SCREW,CAP,HEXAGON H 1/2-13 X 3.00.. UOC:TTA,TTT,TT1,UUA,UUU,UU1,UU2	2

END OF FIGURE

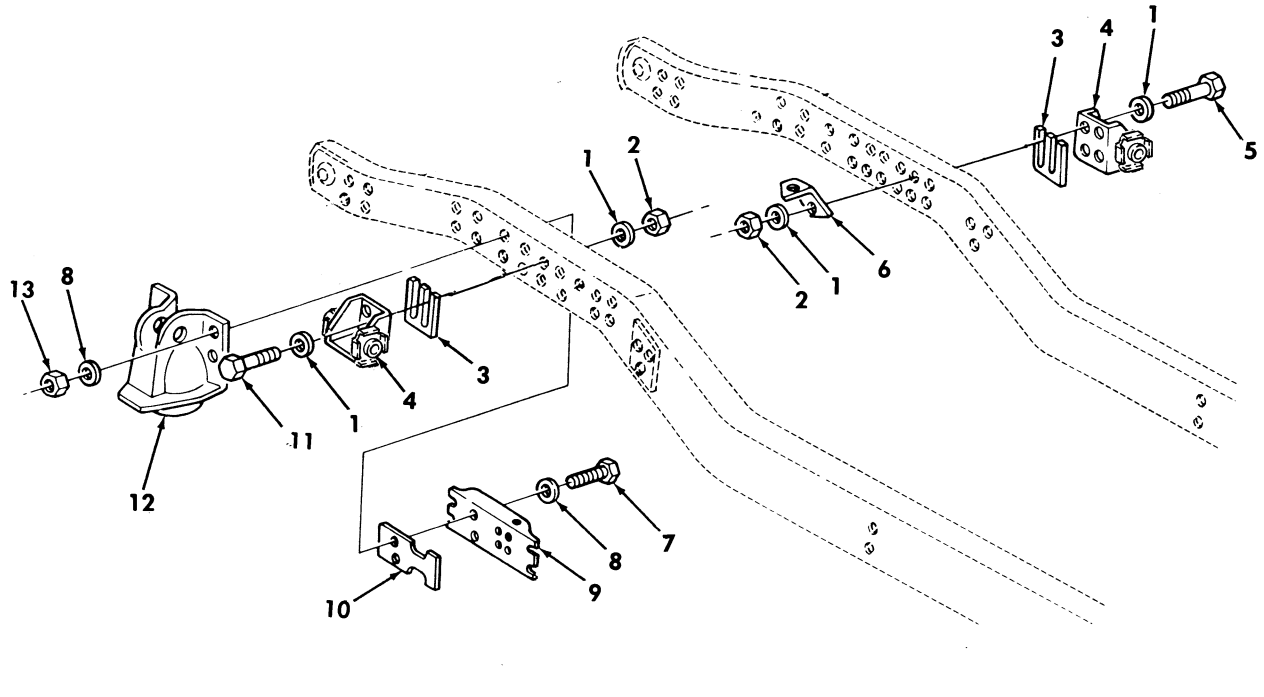

Figure 145. Rear Upper Control Arm Brackets, Spring Seats, Related Parts, and Mounting Hardware.

(1) ITEM NO	(2) SMR CODE	(3) NSN	(4) CAGEC	(5) PART NUMBER	(6) DESCRIPTION AND USABLE ON CODES(UOC)	(7) QTY
					GROUP 1501 FRAME ASSEMBLY	
					FIG. 145 REAR UPPER CONTROL ARM BRACKETS, SPRING SEATS, RELATED PARTS AND MOUNTING HARDWARE	
1	PAFZZ	5310012111703	06032	2310-0143-001	WASHER,FLAT 1/2.....	16
2	PAFZZ	5310004883889	96906	MS51943-39	NUT,SLEF-LOCKING,HE 1/2-13.....	8
* 3	PAFZZ	5365012097831	34623	5583219	SPACER,PLATE .125.....	1
* 3	PAFZZ	5365012097832	19207	12338226-2	SPACER,PLATE .250.....	4
4	PFFZZ	5340014559885	34623	RCSK18517-1B1	BRACKET,MOUNTING UPPER FRONT AND REAR.....	4
* 5	PAFZZ	5305007111783	80204	B1821BH050C425N	SCREW,CAP HEXAGON H 1/2-13 X 4.25..	16
5	PAFZZ	5305000712079	80204	B1821BH050C400N	SCREW,CAP HEXAGON H 1/2-13 X 4.00 USE WITH SHIM PACK UP TO .180 THICK.	8
6	PFFZZ	5340012097767	19207	12338172	PLATE,MENDING.....	1
7	PAFZZ	5305009474361	80204	B1821BH075C475N	SCREW,CAP HEXAGON H 3/4-10 X 4.75...	8
7	PAFZZ	5305009474360	80204	B1821BH075C450N	SCREW,CAP HEXAGON H 3/4-10 X 4.50..	8
* 8	PAFZZ	5310011474052	34623	5593312	WASHER,FLAT 3/4.....	16
9	PFFZZ	2510012039883	19207	12338152	FRAME,STRUCTURAL VE.....	2
10	PFFZZ	2510012106942	34623	12338174	PLATE,REINFORCEMENT.....	2
11	PAFZZ	5305007111783	80204	B1821BH050C425N	SCREW,CAP HEXAGON H 1/2-13 X 4.25..	8
11	PAFZZ	5305007122081	80204	B1821BH050C450N	SCREW,CAP HEXAGON H 1/2-13 X 4.50..	8
12	PFFZZ	2540012035664	19207	12338190	SEAT,SPRING VEHICUL..... UOC:XAA	2
12	PFFZZ	2530012484873	19207	12338738	ARM,CONTROL,VEHICUL.....	2
13	PFFZZ	5310004093333	96906	MS51943-45	NUT,SELF-LOCKING,HE 3/4-10.....	8

END OF FIGURE

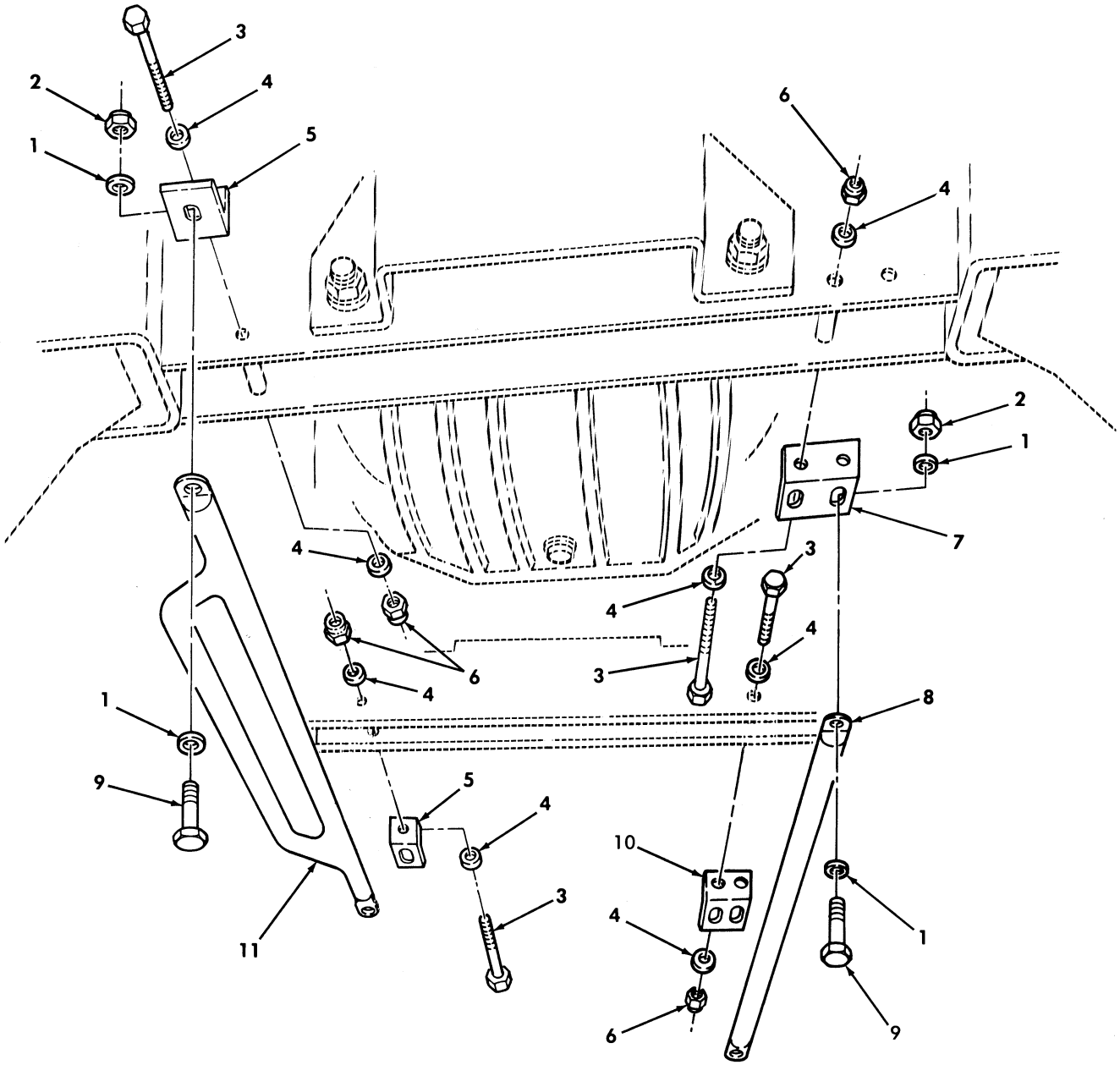

Figure 146. Brake Protection Guard (Front).

(1) ITEM NO	(2) SMR CODE	(3) NSN	(4) CAGEC	(5) PART NUMBER	(6) DESCRIPTION AND USABLE ON CODES(UOC)	(7) QTY
					GROUP 1501 FRAME ASSEMBLY	
					FIG. 146 BRAKE PROTECTION GUARD (FRONT)	
1	PAOZZ	5310000806004	96906	MS27183-14	WASHER,FLAT 3/8.....	12
2	PAOZZ	5310009359021	96906	MS51943-35	NUT,SELF-LOCKING,HE 3/8-16.....	6
3	PAOZZ	5306002264838	80204	B1821BH031C325N	BOLT,MACHINE 5/16-18 X 3.25.....	6
4	PAOZZ	5310000814219	96906	MS27183-12	WASHER,FLAT 5/16.....	12
5	PAOZZ	5340014324870	19207	12460270	BRACKET,ANGLE L.H.,FRONT AND REAR..	2
6	PAOZZ	5310008140673	96906	MS51943-33	NUT,SELF-LOCKING,HE 5/16-18.....	6
7	PAOZZ	5340014342832	34623	6002344	BRACKET,ANGLE R.H.,FRONT.....	1
* 8	PAOZZ	2540014329894	19207	12460243	GUARD,BRUSH,VEHICUL R.H. FRONT.....	2
9	PAOZZ	5305000680511	80204	B1821BH038C125N	SCREW,CAP,HEXAGON H 3/8-16 X 1.25..	6
10	PAOZZ	5340014384497	34623	6002343	BRACKET,MULTIPLE AN R.H.,FRONT.....	1
11	PAOZZ	2540014329899	34623	12460268	GUARD,BRUSH,VEHICUL L.H.,FRONT.....	1

END OF FIGURE

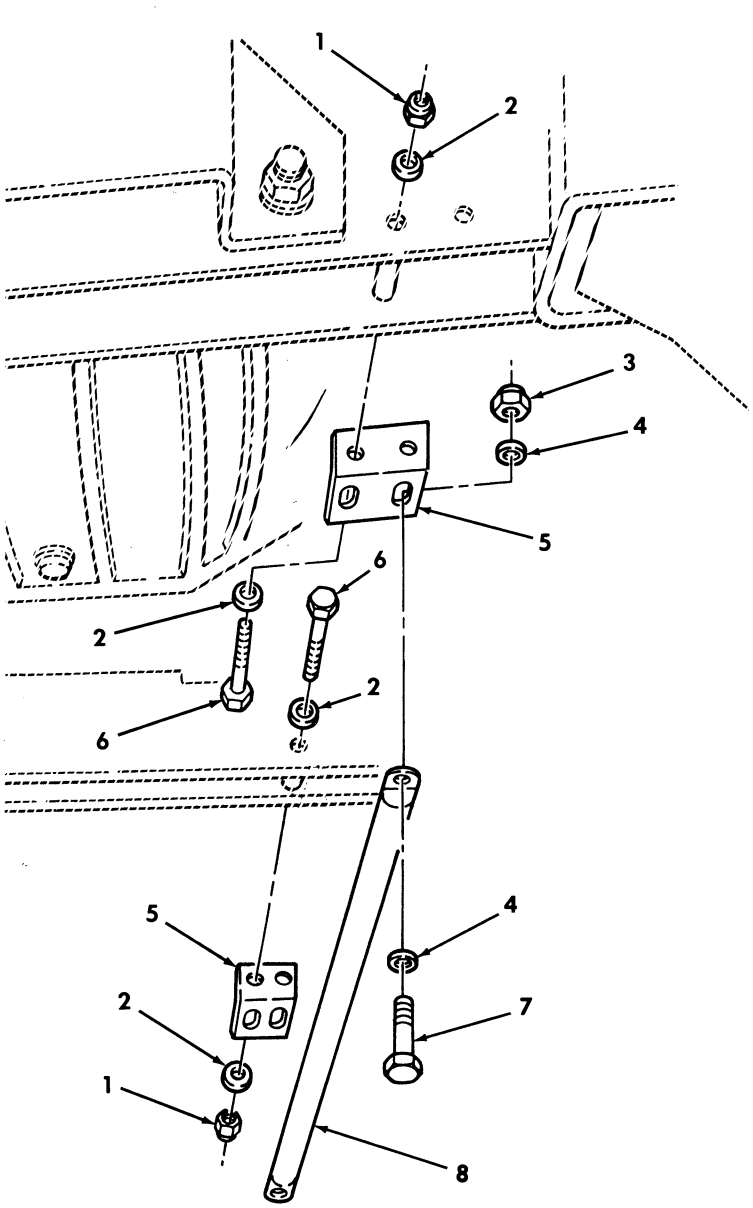

Figure 147. Brake Protection Guard (Rear).

(1) ITEM NO	(2) SMR CODE	(3) NSN	(4) CAGEC	(5) PART NUMBER	(6) DESCRIPTION AND USABLE ON CODES(UOC)	(7) QTY
					GROUP 1501 FRAME ASSEMBLY	
					FIG. 147 BRAKE PROTECTION GUARD (REAR)	
1	PAOZZ	5310008140673	96906	MS51943-33	NUT,SELF-LOCKING,HE 5/16-18.....	8
2	PAOZZ	5310000814219	96906	MS27183-12	WASHER,FLAT 5/16.....	16
3	PAOZZ	5310009359021	96906	MS51943-35	NUT,SELF-LOCKING,HE 3/8-16.....	8
4	PAOZZ	5310000806004	96906	MS27183-14	WASHER,FLAT 3/8.....	16
5	PAOZZ	5340014332721	34623	6002346	BRACKET,ANGLE REAR.....	4
6	PAOZZ	5305014599564	24617	453039	SCREW,CAP,HEXAGON H 5/16-18 X 2.75.	8
7	PAOZZ	5305000680511	80204	B1821BH038C125N	SCREW,CAP,HEXAGON H 3/8-16 X 1.25..	8
* 8	PAOZZ	2540014329894	19207	12460243	GUARD,FRAME R.H. FRONT.....	4

END OF FIGURE

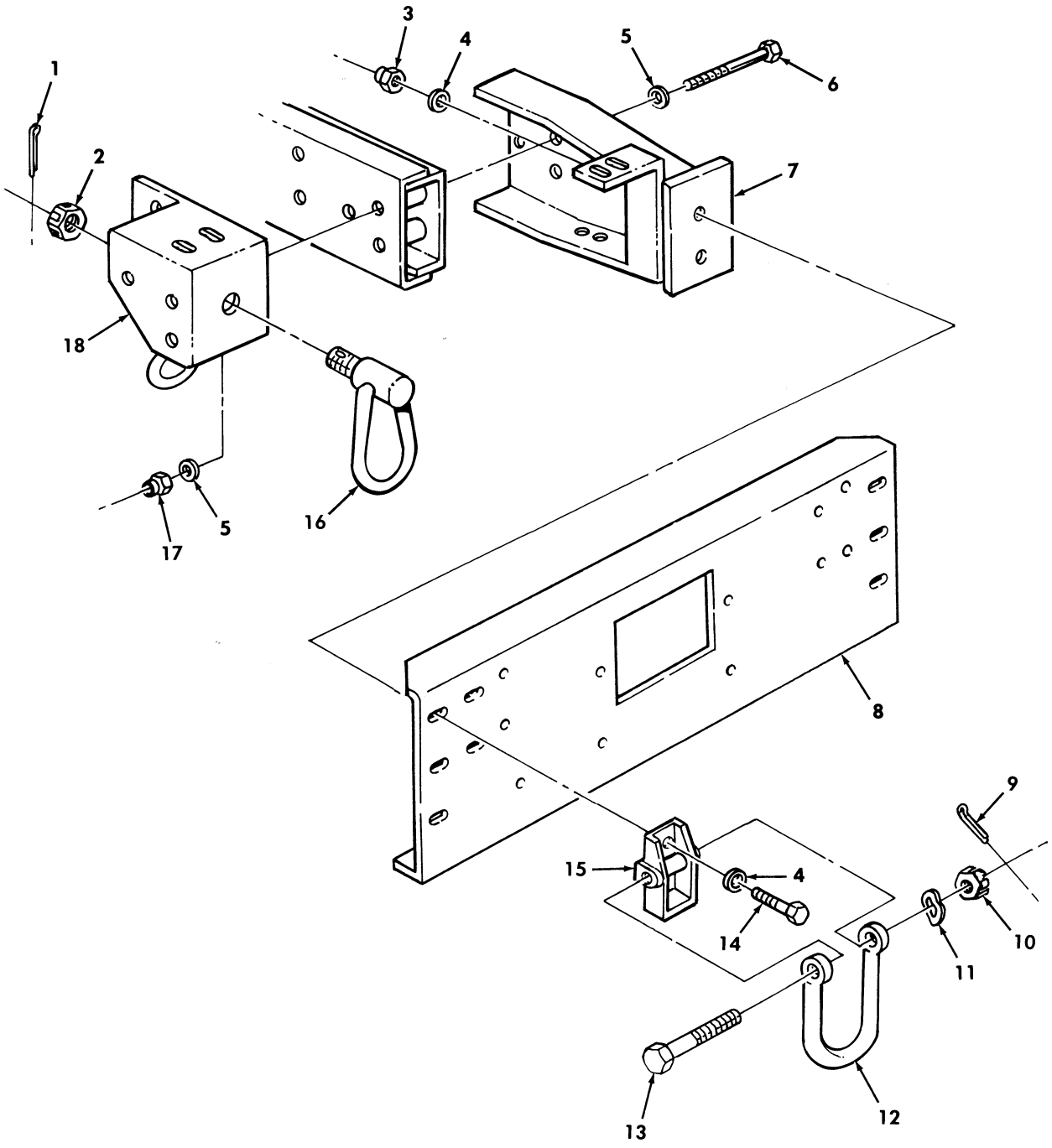

Figure 148. Front Bumper and Lifting Shackle.

(1) ITEM NO	(2) SMR CODE	(3) NSN	(4) CAGEC	(5) PART NUMBER	(6) DESCRIPTION AND USABLE ON CODES(UOC)	(7) QTY
					GROUP 1501 FRAME ASSEMBLY	
					FIG. 148 FRONT BUMPER AND LIFTING SHACKLE	
1	PAOZZ	5315002398032	96906	MS24665-513	PIN,COTTER 3/16 X 1.50.....	2
* 2	PAOZZ	5310008506993	96906	MS35692-62	NUT,PLAIN,CASTELLAT 5/8-18.....	2
3	PAOZZ	5310004883889	96906	MS51943-39	NUT,SELF-LOCKING,HE 1/2-13.....	4
4	PAOZZ	5310011211703	24617	2436165	WASHER,FLAT 1/2.....	8
5	PAOZZ	5310011517347	24617	2436167	WASHER,FLAT 5/8.....	12
6	PAOZZ	5305007247254	80204	B1821BH063C400N	SCREW,CAP,HEXAGON H 5/8-11 X 4.00..	6
7	PFOZZ	2510013581178	19207	12342387	FRAME SECTION,STRUC L.H.....	1
7	PFOZZ	2510013578789	19207	12342388	FRAME SECTION,STRUC R.H.....	1
8	PAOZZ	2540014128610	19207	12447091	BUMPER,VEHICULAR FRONT.....	1
9	PAOZZ	5315000120123	80205	MS24665-355	PIN,COTTER 1/8 X 1.25.....	2
10	PAOZZ	5310008507004	96906	MS35692-54	NUT,PLAIN,SLOTTED,H 5/8-18.....	2
11	PAOZZ	5310005957486	19207	7716721	WASHER,SPRING TENSI 49/64.....	2
12	PAOZZ	4030013161551	19207	12342354	SHACKLE.....	2
13	PAOZZ	5305012643602	19207	12338225-1	SCREW,CAP,HEXAGON H 5/8-18 X 5.50..	2
14	PAOZZ	5305000712070	80204	B1821BH050C175N	SCREW,CAP,HEXAGON H 1/2-13 X 1.75..	4
15	PAOZZ	2590013160084	34623	12342404	BRACKET,VEHICULAR C.....	2
16	PAOZZ	5340014130282	19207	12447089-1	CONNECTOR,ROD END FRONT.....	2
17	PAOZZ	5310000614651	19207	12387349-43	NUT,SELF-LOCKING,HE 5/8-11.....	6
18	PAOZZ	2590014129560	34623	12447093	BRACKET,VEHICULAR C FRONT,L.H.....	1
18	PAOZZ	2590014127564	19207	12447092	BRACKET,VEHICULAR C FRONT,R.H.....	1

END OF FIGURE

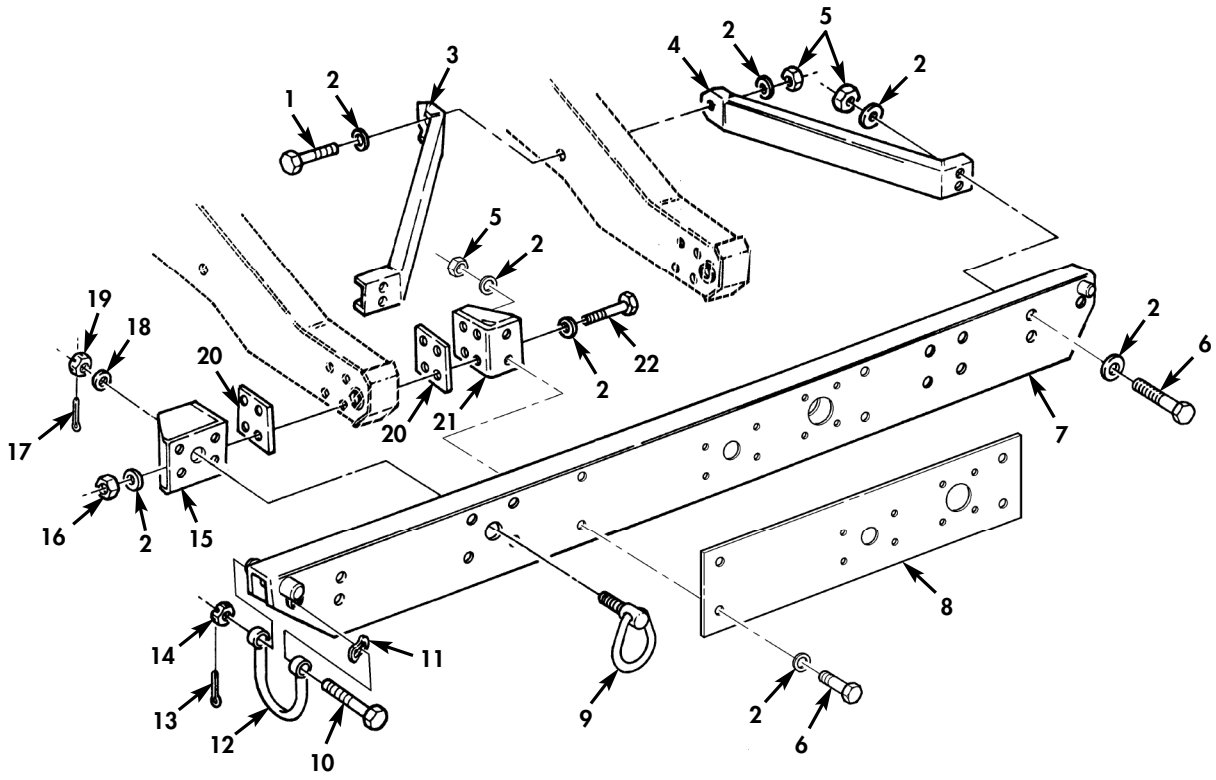

Figure 149. Rear Bumper and Lifting Shackle.

(1) ITEM NO	(2) SMR CODE	(3) NSN	(4) CAGEC	(5) PART NUMBER	(6) DESCRIPTION AND USABLE ON CODES(UOC)	(7) QTY
					GROUP 1501 FRAME ASSEMBLY	
					FIG. 149 REAR BUMPER AND LIFTING SHACKLE	
* 1	PAOZZ	5305000712075	80204	B1821BH050C300N	SCREW,CAP,HEXAGON H 1/2-13 X 3.00..	2
* 2	PAOZZ	5310011211703	24617	2436165	WASHER,FLAT 1/2.....	36
3	PAOZZ	2540012573877	19207	12339186	BRACE ASSEMBLY,BUMP.....	2
4	PFOZZ	2540013957999	34623	12342960	BRACKET,VEHICULAR B.....	2
* 5	PAOZZ	5310004883889	96906	MS51943-39	NUT,SELF-LOCKING,HE 1/2-13.....	10
* 6	PAOZZ	5305000712077	80204	B1821BH050C350N	SCREW,CAP,HEXAGON H 1/2-13 X 3.50..	8
* 7	PAOZZ	2540011964920	19207	12469405	BUMPER,VEHICULAR.....	1
* 8	PAOZZ	5340014987964	19207	12469169	PLATE,MOUNTING USE WITH AIRLIFT BUMPER REINFORCEMENT MWO 9-2320-280-20-6	1
* 9	PAOZZ	5340014127514	19207	12447089-2	CONNECTOR,ROD END.....	2
* 10	PAOZZ	5305012643602	19207	12338225-1	SCREW,CAP,HEXAGON H 5/8-18 X 5.50..	2
* 11	PAOZZ	5310005957486	19207	7716721	WASHER,SPRING TENSI 5/8.....	2
* 12	PAOZZ	4030013161551	19207	12342354	SHACKLE.....	2
* 13	PAOZZ	5315000120123	80205	MS24665-355	PIN,COTTER.....	2
* 14	PAOZZ	5310008507004	96906	MS35692-54	NUT,PLAIN,SLOTTED,H 5/8-18.....	2
* 15	PFOZZ	5340014088523	19207	12446989	BRACKET,MOUNTING OUTER,L.H.....	1
* 15	PFOZZ	5340014088529	19207	12446990	BRACKET,MOUNTING OUTER,R.H.....	1
* 16	PAOZZ	5310000614651	81349	M45913/1-10CG8C	NUT,SELF-LOCKING,HE 5/8-11.....	8
17	PAOZZ	5315002398032	80205	MS24665-513	PIN,COTTER 3/32 X 1/2.....	2
* 18	PAOZZ	5310011474052	23862	2436168	WASHER,FLAT 3/4.....	2
* 19	PAOZZ	5310008506993	96906	MS35692-62	NUT,PLAIN,SLOTTED,H 3/4-20.....	2
* 20	PAOZZ	5365012055377	19207	12338164	SPACER,PLATE.....	4
* 21	PAOZZ	2541014864915	19207	12446991-3	BRACKET,VEHICULAR B MOUNTING,INNER.	2
* 22	PAOZZ	5305007247264	80204	B1821BH063C450N	SCREW,CAP,HEXAGON H 5/8-11 X 4.50..	8

END OF FIGURE

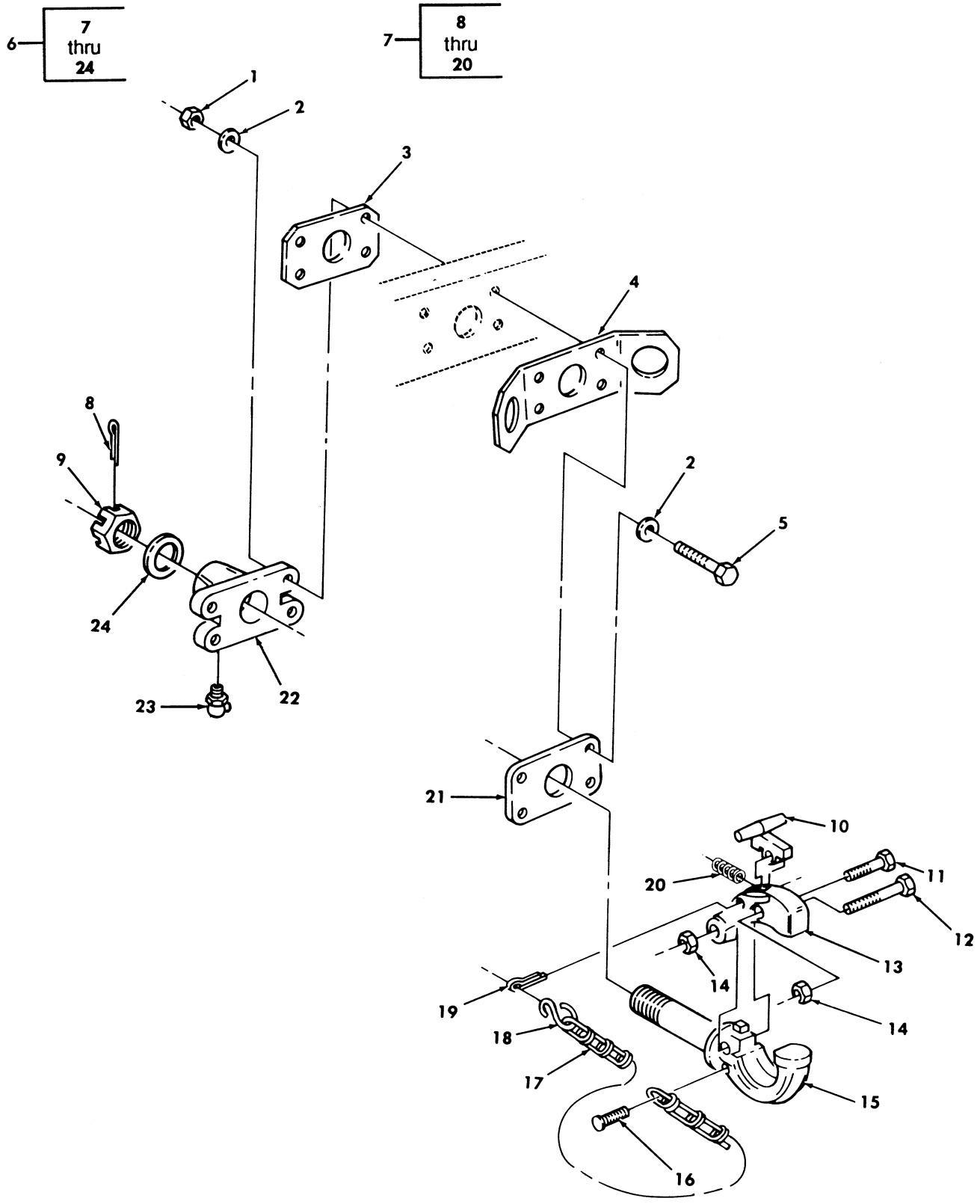

Figure 150. Towing Pintle Assembly.

(1) ITEM NO	(2) SMR CODE	(3) NSN	(4) CAGEC	(5) PART NUMBER	(6) DESCRIPTION AND USABLE ON CODES(UOC)	(7) QTY
					GROUP 1503 PINTLES AND TOWING ATTACHMENTS	
					FIG. 150 TOWING PINTLE ASSEMBLY	
1	PAOZZ	5310004883889	96906	MS51943-39	NUT,SELF-LOCKING,HE 1/2-13.....	4
2	PAOZZ	5310011211703	06032	2310-0143-001	WASHER,FLAT 1/2.....	8
3	PFOZZ	5365012193528	34623	5577592	SPACER,PLATE.....	1
4	PFOZZ	2540011866039	19207	12338189	PLATE,MOUNTING,GROM.....	1
5	PAOZZ	5305000712073	80204	B1821BH050C250N	SCREW,CAP,HEXAGON H 1/2-13 X 2.50..	4
* 6	PFOOO	2540011892193	74410	T-60-A0S-L	PINTLE ASSEMBLY,TOW.....	1
7	PAOZZ	2540000786633	96906	MS51335-1	.PINTLE ASSEMBLY,TOW.....	1
8	PAOZZ	5315008460126	80205	MS24665-628	..PIN,COTTER 1/4 X 3.00.....	1
9	PAOZZ	5310008496882	96906	MS35692-94	..NUT,PLAIN,SLOTTED,H 1.25-12.....	1
10	PFOZZ	2540010235116	19207	8380196	..LATCH,PINTLE HOOK.....	1
11	PAOZZ	5305012711806	19207	12296696-2	..SCREW,CAP,HEXAGON H 1/2-20 X 1.75	1
12	PAOZZ	5305007195240	39428	91248A721	..SCREW,CAP,HEXAGON H 1/2-20 X 2.50	1
13	PFOZZ	2540005257067	19207	7524314	..LATCH,PINTLE HOOK.....	1
14	PAOZZ	5310004492376	96906	MS21245-8	..NUT,SELF-LOCKING,HE 1/2-20.....	2
15	PAOZZ	2540000786633	96906	MS51335-1	..PINTLE ASSEMBLY,TOW.....	1
16	PFOZZ	5305002535626	80205	MS21318-47	..SCREW,DRIVE #10-8 X 1/2.....	1
17	MOOZZ		81348	RR-C-271-6	..CHAIN MAKE FROM CHAIN,P/N C43974, 6 LINKS.....	1
18	PAOZZ	4030009162141	96906	MS87006-53	..HOOK,CHAIN,S.....	1
* 19	PAOZZ	5315002431169	96906	MS24665-640	..PIN,COTTER 1/4 X 2.00.....	1
20	PAOZZ	5360007044253	19207	7044253	..SPRING,HELICAL,COMP.....	1
21	PFOZZ	3040001275322	19207	7355393	.PLATE,RETAINING,SHA.....	1
22	PFOZZ	5340004082432	19207	7355392	.BRACKET,MOUNTING.....	1
23	PAOZZ	4730000504207	96906	MS15001-4	.FITTING,LUBRICATION.....	1
24	PAOZZ	5310007355396	19207	7355396	.WASHER,FLAT 1.25.....	1

END OF FIGURE

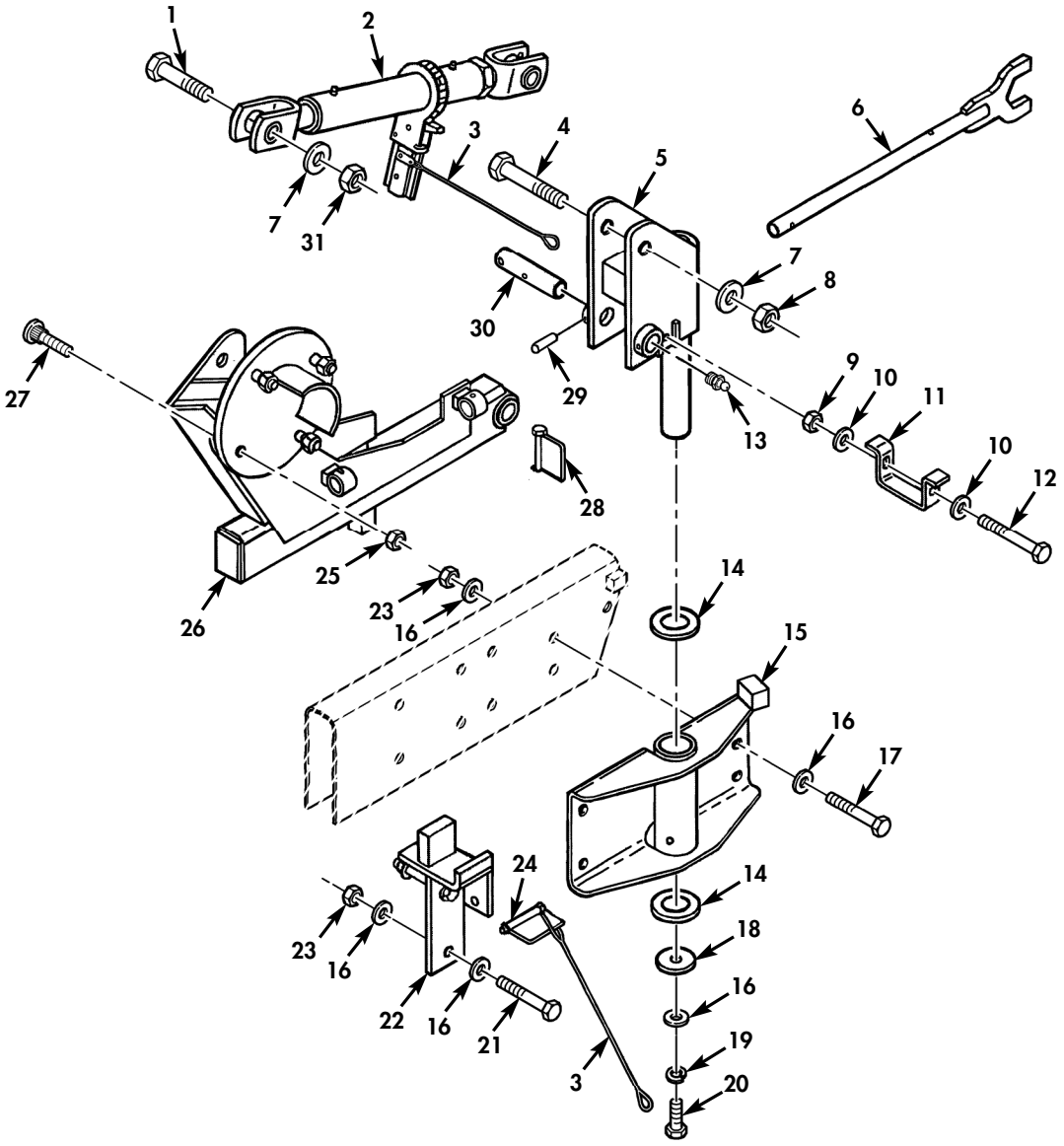

Figure 150A. Drop Down Spare Tire Carrier Accessory Kit.

(1) ITEM NO	(2) SMR CODE	(3) NSN	(4) CAGEC	(5) PART NUMBER	(6) DESCRIPTION AND USABLE ON CODES(UOC)	(7) QTY
					GROUP 1504 SPARE WHEEL CARRIER AND TIRE LOCK	
					FIG. 150A DROP DOWN SPARE TIRE CARRIER ACCESSORY KIT	
* 1	PAOZZ	5305000712077	80204	B1821BH050C350N	SCREW,CAP,HEXAGON H 3/4-10 X 3.50 PART OF KIT P/N STA007-05.....	1
* 2	KFOZZ		0ZM57	99221173P	JACK,RATCHET,DRIVIN PART OF KIT P/N STA007-05.....	1
* 3	KFOZZ		0ZM57	70061338	WIRE,ROPE ASSEMBLY PART OF KIT P/N STA007-05.....	2
* 4	PAOZZ	5305009474360	80204	B1821BH075C450N	SCREW,CAP,HEXAGON H 3/4-10 X 4.50 PART OF KIT P/N STA007-05.....	1
* 5	PAOZZ	3010015428199	0ZM57	STA002-02P	COUPLING,SHAFT,FLEX PART OF KIT P/N STA007-05.....	1
* 6	PAOZZ	5120015345919	0ZM57	STA010-01P	WRENCH,OPEN END PART OF KIT P/N STA007-05.....	1
* 7	PAOZZ	5310008238804	96906	MS27183-9	WASHER,FLAT 3/4 PART OF KIT P/N STA007-05.....	1
* 8	PAOZZ	5310004093333	81349	M45913/3-12CG8C	NUT,SELF-LOCKING,HE 3/4-10 PART OF KIT P/N STA007-05.....	1
* 9	PAOZZ	5310009359021	96906	MS51943-35	NUT,SELF-LOCKING,HE 3/8-16 PART OF KIT P/N STA007-05.....	1
* 10	PAOZZ	5310014124013	24617	2436163	WASHER,FLAT 3/8 PART OF KIT P/N STA007-05.....	2
* 11	KFOZZ		0ZM57	ST023-02P	BRACKET,LEVER PART OF KIT P/N STA007-05.....	1
* 12	PAOZZ	5305008576886	80204	B1821BH038C450N	SCREW,CAP,HEXAGON H 3/8-16 X 4.50 PART OF KIT P/N STA007-05.....	1
* 13	KFOZZ		0ZM57	H133	FITTING,LUBRICATION PART OF KIT P/N STA007-05.....	1
* 14	KFOZZ		0ZM57	90171135	SPACER,RING PART OF KIT P/N STA007-05.....	2
* 15	KFOZZ		0ZM57	STA001-05P	BRACKET,MOUNTING PART OF KIT P/N STA007-05.....	1
* 16	PAOZZ	5310011211703	24617	2436165	WASHER,FLAT 1/2 PART OF KIT P/N STA007-05.....	13
* 17	PAOZZ	5305000712079	80204	B1821BH050C400N	SCREW,CAP,HEXAGON H 1/2-13 X 4.00 PART OF KIT P/N STA007-05.....	4
* 18	KFOZZ		0ZM57	ST019-01P	WASHER,FLAT PART OF KIT P/N STA007-05.....	1
* 19	PAOZZ	5310001941483	80205	MS35333-44	WASHER,LOCK 1/2 PART OF KIT P/N STA007-05.....	1
* 20	PAOZZ	5305007320511	80204	B1821BH050C113N	SCREW,CAP,HEXAGON H 1/2-13 X 1.125 PART OF KIT P/N STA007-05.....	1
* 21	PAOZZ	5305000712081	80204	B1821BH050C450N	SCREW,CAP,HEXAGON H 1/2-13 X 4.50 PART OF KIT P/N STA007-05.....	2
* 22	KFOZZ		0ZM57	STA005-05P	BRACKET,MOUNTING PART OF KIT P/N STA007-05.....	1
* 23	PAOZZ	5310004883889	96906	MS51943-39	NUT,SELF-LOCKING,HE 1/2-13 PART OF KIT P/N STA007-05.....	6
* 24	PAOZZ	5315015424594	0ZM57	70061343	PIN,LOCK PART OF KIT P/N STA007-05..	1

(1) ITEM NO	(2) SMR CODE	(3) NSN	(4) CAGEC	(5) PART NUMBER	(6) DESCRIPTION AND USABLE ON CODES(UOC)	(7) QTY
* 25	KFOZZ		0ZM57	H1593	NUT,PLAIN,HEXAGON H PART OF KIT P/N STA007-05.....	4
* 26	KFOZZ		0ZM57	STA003-04P	RETAINER,SPARE TIRE PART OF KIT P/N STA007-05.....	1
* 27	KFOZZ		0ZM57	H1594	BOLT,MACHINE PART OF KIT P/N STA007-05.....	4
* 28	PAOZZ	5315015423872	0ZM57	70061342	PIN,LOCK PART OF KIT P/N STA007-05..	1
* 29	KFOZZ		0ZM57	H100	PIN,SPRING PART OF KIT P/N STA007-05 UOC:TTA,TTT,TT1,UUA,UUU,UU1,UU2	1
* 30	KFOZZ		0ZM57	ST021-01P	PIN,SRAIGHT,HX,HEAD PART OF KIT P/N STA007-05.....	1
* 31	PAOZZ	5310011340206	24617	9422307	NUT,SELF-LOCKING,CO 3/4-10 PART OF KIT P/N STA007-05.....	1

END OF FIGURE

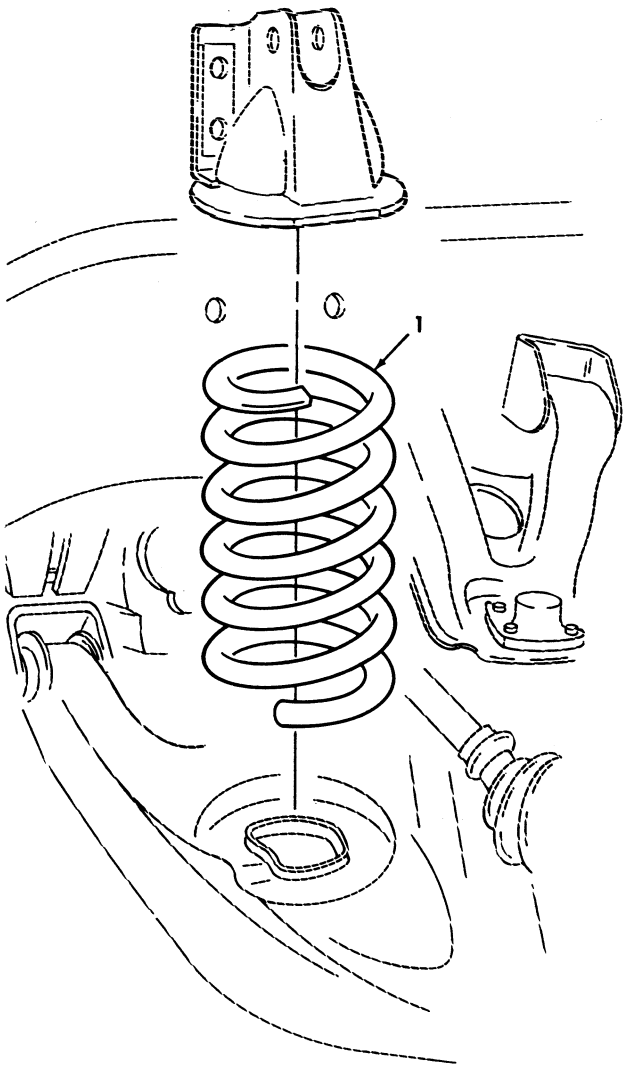

Figure 151. Springs, Front and Rear.

(1) ITEM NO	(2) SMR CODE	(3) NSN	(4) CAGEC	(5) PART NUMBER	(6) DESCRIPTION AND USABLE ON CODES(UOC)	(7) QTY
					GROUP 16 SPRINGS AND SHOCK ASBORBERS	
					1601 SPRINGS	
					FIG. 151 SPRINGS,FRONT AND REAR	
1	PAOZZ	5360014578018	34623	RCSK18428-2	SPRING,HELICAL,COMP REAR..... UOC:XBB	2
1	PAOZZ	5360014578029	34623	RCSK18428-1	SPRING,HELICAL,COMP FRONT..... UOC:XBB	2
1	PAOZZ	5360011794106	34623	12338316-2	SPRING,HELICAL,COMP FRONT..... UOC:XAA	2
* 1	PAOZZ	5360014324721	34623	RCSK17194-B1	SPRING,HELICAL,COMP REAR..... UOC:XAA	2
* 1	PAOZZ	5306015246029	34623	RCSK19775	SPRING,HELICAL COMP REAR..... UOC:TTT,UUU	2

END OF FIGURE

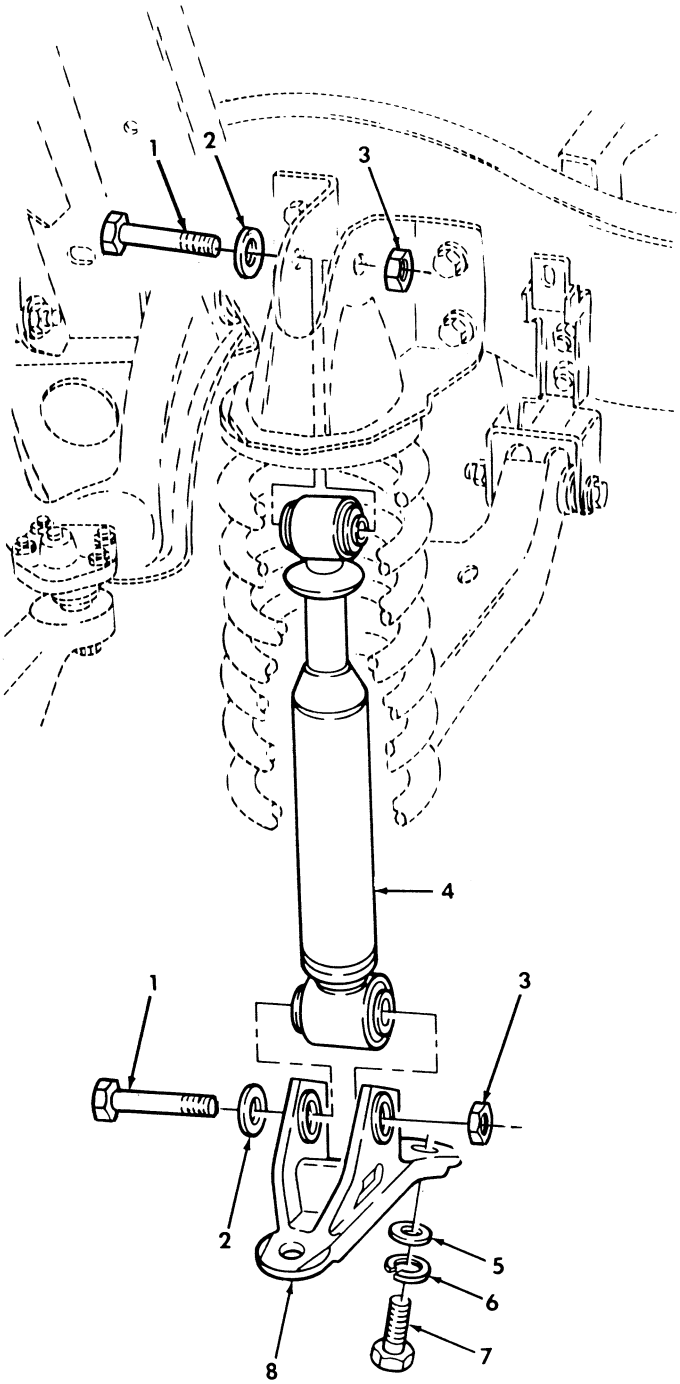

Figure 152. Shock Absorbers, Front and Rear.

(1) ITEM NO	(2) SMR CODE	(3) NSN	(4) CAGEC	(5) PART NUMBER	(6) DESCRIPTION AND USABLE ON CODES(UOC)	(7) QTY
					GROUP 1604 SHOCK ABSORBER EQUIPMENT	
					FIG. 152 SHOCK ABSORBERS,FRONT AND REAR	
1	PAOZZ	5365011867764	34623	5595454	BUSHING,MACHINE THR FRONT AND REAR, 1.00-14 X 3.17.....	8
2	PAOZZ	5310011873485	7X677	2065616	WASHER,FLAT 1.00.....	8
3	PAOZZ	5310014391154	34623	12339206	NUT,SELF-LOCKING,HE 1.00-14.....	8
* 4	PAOZZ		76445	OE12010	SHOCK ABSORBER,DIRE REAR.....	2
* 4	PAOZZ		76445	OE12011	SHOCK ABSORBER,DIRE FRONT.....	2
5	PAOZZ	5310008238803	96906	MS27183-21	WASHER,FLAT 5/8.....	8
6	PAOZZ	5310008206653	96906	MS35338-50	WASHER,LOCK 5/8.....	8
7	PAOZZ	5305007247222	80204	B1821BH063C200N	SCREW,CAP,HEXAGON H 5/8-11 X 2.00..	8
8	PAOZZ	2510011877037	19207	12338315	BRACKET,SHOCK MOUNT.....	4

END OF FIGURE

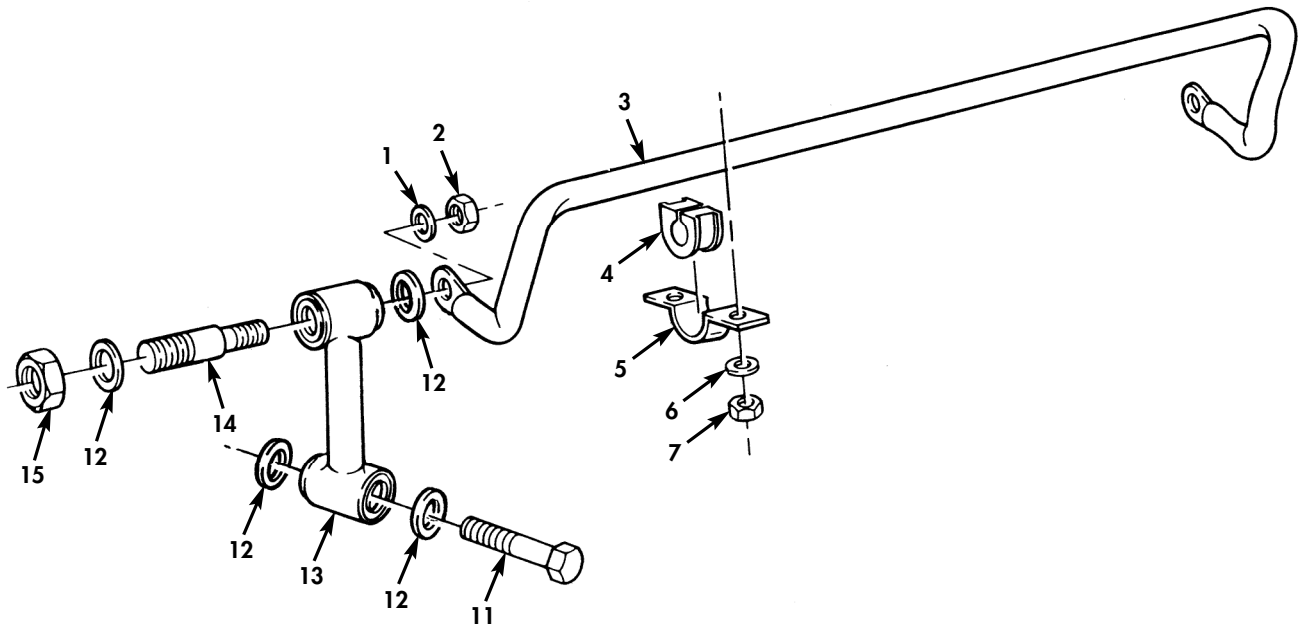

SERIAL NUMBER 299999
AND BELOW

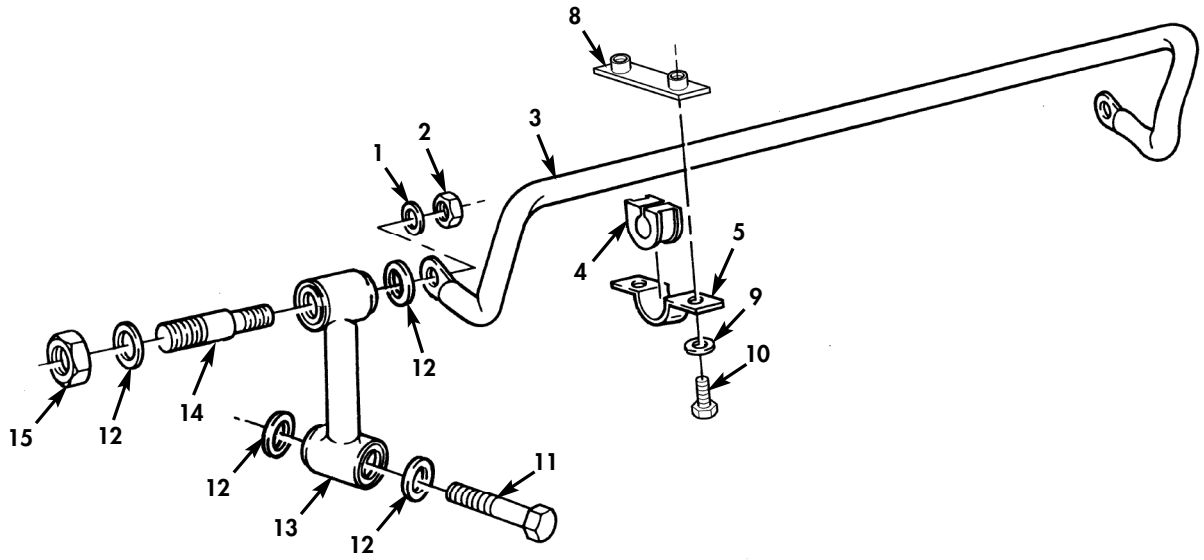

SERIAL NUMBER 300000
AND ABOVE

Figure 153. Stabilizer Bar and Connecting Links.

(1) ITEM NO	(2) SMR CODE	(3) NSN	(4) CAGEC	(5) PART NUMBER	(6) DESCRIPTION AND USABLE ON CODES(UOC)	(7) QTY
					GROUP 1605 TORQUE,RADIUS AND STABILIZER RODS	
					FIG. 153 STABILIZER BAR AND CONNECTING LINKS	
* 1	PAOZZ	5310011211703	24617	2436165	WASHER,FLAT 1/2.....	6
* 2	PAOZZ	5310004883888	81349	M45913/38FG8C	NUT,SELF-LOCKING,HE 1/2-20.....	2
3	PAOZZ	2510014562277	34623	6004872	BAR,STABILIZER.....	1
4	PCOZZ	5325011910595	19207	12338317	GROMMET,NONMETALLIC.....	2
5	PAOZZ	5340011900810	19207	12338319	STRAP,RETAINING.....	2
* 6	PAOZZ	5310008094085	96906	MS27183-16	WASHER,FLAT 7/16 SERIAL NUMBER 299999 AND BELOW.....	4
* 7	PAOZZ	5310011504003	24617	9422299	NUT,SELF-LOCKING,HE 7/16-14 SERIAL NUMBER 299999 AND BELOW.....	4
* 8	PFOZZ		34623	6042476	PLATE,MOUNTING SERIAL NUMBER 300000 AND ABOVE..... UOC:TTA,TTT,TT1,UUA,UUU,UU1,UU2	2
* 9	PAOZZ	5310012866077	19207	12341856	WASHER,FLAT 7/16 SERIAL NUMBER 300000 AND ABOVE..... UOC:TTA,TTT,TT1,UUA,UUU,UU1,UU2	4
* 10	PAOZZ	5305000711786	80204	B1821BH044C100N	SCREW,CAP,HEXAGON H 7/16-14 X 1.00 SERIAL NUMBER 300000 AND ABOVE..... UOC:TTA,TTT,TT1,UUA,UUU,UU1,UU2	4
* 11	PAOZZ	5305007247228	80204	B1821BH063C300N	SCREW,CAP,HEXAGON H 5/8-11 X 3.00..	2
* 12	PAOZZ	5310011858689	19207	12338322	WASHER,FLAT 5/8.....	8
* 13	PAOZZ	3040011863718	34623	12338323	CONNECTING LINK,RIG.....	2
* 14	PAOZZ	5307011881229	19207	12339207	STUD,RECESSED AND S.....	2
* 15	PAOZZ	5310000614651	81349	M45913/1-10CG8C	NUT,SELF-LOCKING,HE 5/8-11.....	2

END OF FIGURE

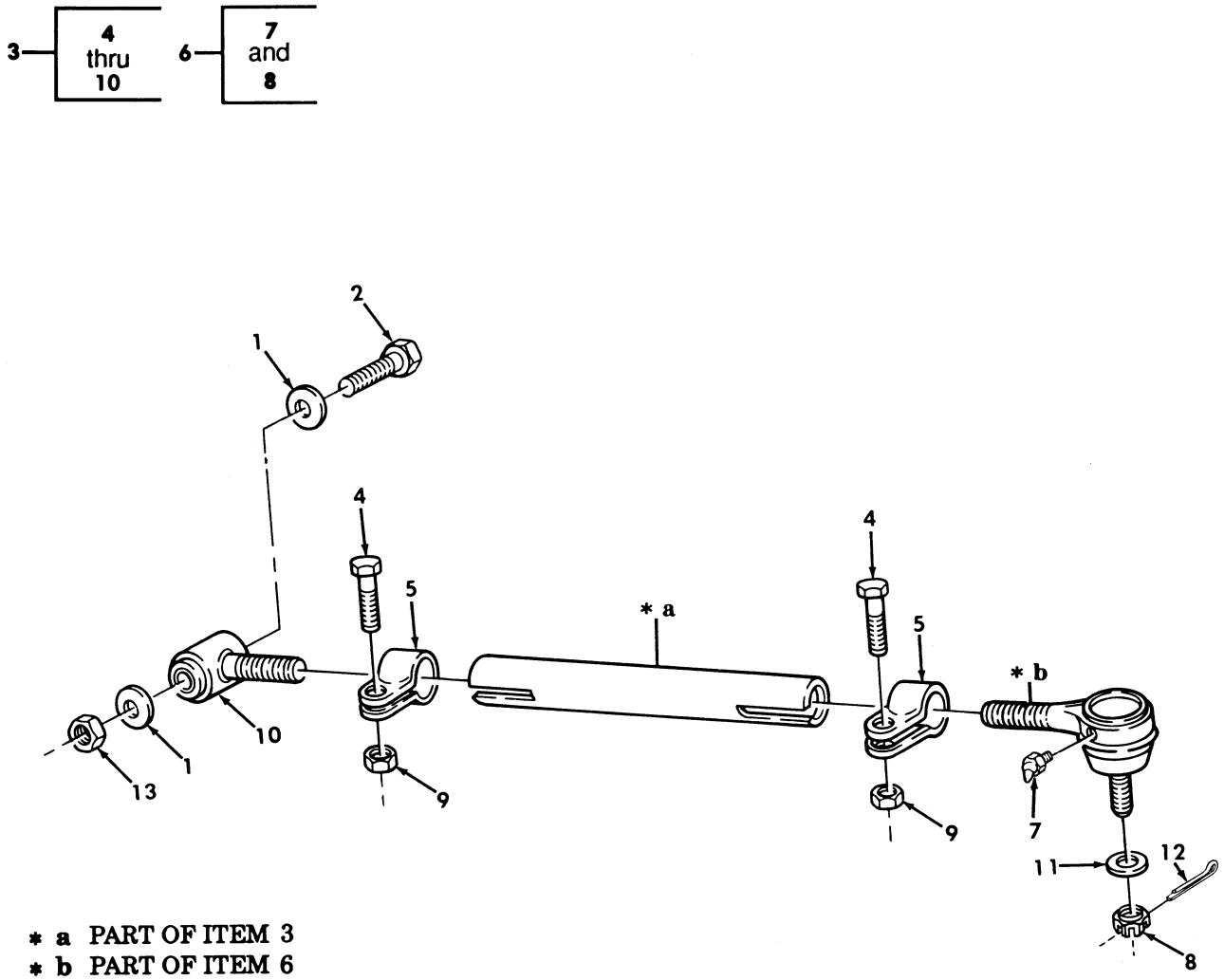

* a PART OF ITEM 3
* b PART OF ITEM 6

Figure 154. Rear Radius Rods.

(1) ITEM NO	(2) SMR CODE	(3) NSN	(4) CAGEC	(5) PART NUMBER	(6) DESCRIPTION AND USABLE ON CODES(UOC)	(7) QTY
					GROUP 1605 TORQUE,RADIUS AND STABILIZER RODS	
					FIG. 154 REAR RADIUS RODS	
1	PAOZZ	5310011474052	34623	5593312	WASHER,FLAT 3/4.....	4
2	PAOZZ	5305009474361	80204	B1821BH075C475N	SCREW,CAP,HEXAGON H 3/4-10 X 4.75..	2
3	PAOOO	2510014232877	34623	6005274-B1	BAR,STABILIZER REAR.....	2
4	PAOZZ	5305012117478	7X677	9419079	.SCREW,CAP,HEXAGON H 7/16-14 X 1.75.	2
5	PAOZZ	5340011918161	98349	L-18-CPS-5-A-10	.CLAMP,LOOP.....	2
6	PAOZZ	2530011972160	98349	L-18-SV-5150-C-12	.TIE ROD END,STEERIN.....	2
* 7	PAOZZ	4730000504205	81343	AS15001-3	..FITTING,LUBRICATION.....	1
8	PAOZZ	5310008507004	96906	MS35692-54	..NUT,PLAIN,SLOTTED,H 5/8-18.....	1
* 9	PAOZZ	5310002416659	81349	M45913/3-7CG8C	.NUT,PLAIN,HEXAGON 7/16-14.....	2
10	PAOZZ	2530011863740	27387	941180	.TIE ROD END,STEERIN.....	1
11	PAOZZ	5310011517347	24617	2436167	WASHER,FLAT 5/8.....	2
12	PAOZZ	5315000120123	80205	MS24665-355	PIN,COTTER 1/8 X 1.25.....	2
13	PAOZZ	5310004093333	96906	MS51943-45	NUT,SELF-LOCKING,HE 3/4-10.....	2

END OF FIGURE

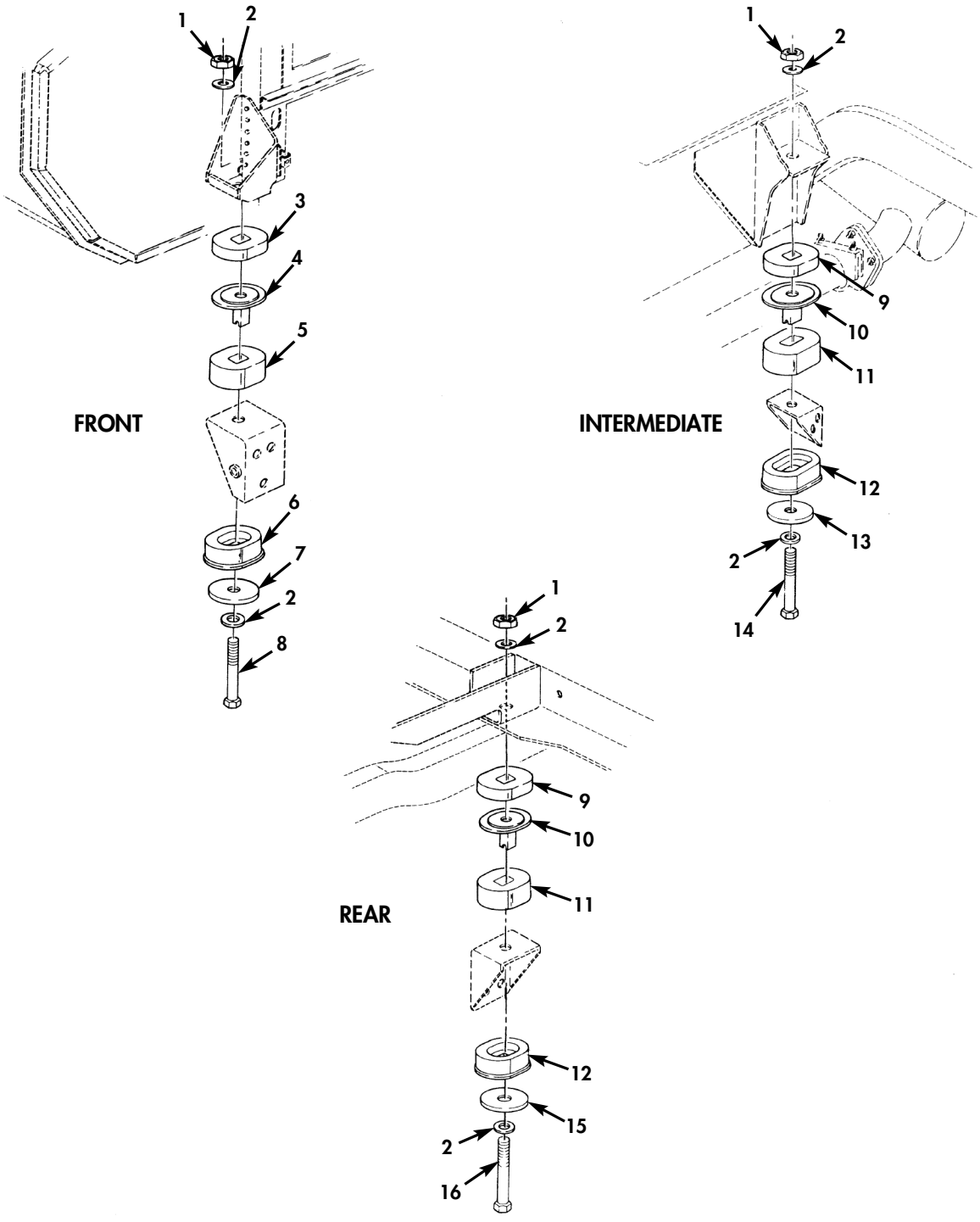

Figure 155. Body Mounting Components (Serial Number 299999 and Below).

(1) ITEM NO	(2) SMR CODE	(3) NSN	(4) CAGEC	(5) PART NUMBER	(6) DESCRIPTION AND USABLE ON CODES(UOC)	(7) QTY
					GROUP 18 BODY,CAB,HOOD,AND HULL ASSEMBLY	
					1801 BODY,CAB,HOOD,AND HULL ASSEMBLY	
					FIG. 155 BODY MOUNTING COMPONENTS (SERIAL NUMBER 299999 AND BELOW)	
1	PAHZZ	5310011304274	24617	9422305	NUT,SELF-LOCKING,HE 5/8-11.....	6
2	PAHZZ	5310011517347	24617	2436167	WASHER,FLAT 5/8.....	12
* 3	PAHZZ	5365015603999	19207	12469090-2	SPACER,SLEEVE FRONT.....	2
4	PAHZZ	5365012644023	19207	12339249-1	SPACER,SLEEVE FRONT.....	2
5	PAHZZ	5342011895452	34623	5569270	MOUNT,RESILIENT UPPER FRONT.....	2
6	PAHZZ	5342011867236	19207	12339247-1	MOUNT,RESILIENT LOWER FRONT.....	2
7	PAHZZ	5310012527285	19207	12339248-2	WASHER,FLAT R.H. FRONT.....	4
7	PAHZZ	5340014769321	19207	12339248-3	WASHER,FLAT L.H. FRONT.....	2
* 8	PAHZZ	5305007247265	80204	B1821BH063C475N	SCREW,CAP,HEXAGON H 5/8-11 X 4.75 R.H. FRONT.....	1
* 8	PAHZZ	5305007247263	80204	B1821BH063C425N	SCREW,CAP,HEXAGON H 5/8-11 X 4.25 L.H. FRONT.....	1
* 9	PAHZZ	5365015603060	19207	12469090-1	SPACER,SLEEVE INTERMEDIATE AND REAR	4
10	PAHZZ	5365011861294	34623	5569268	SPACER,SLEEVE INTERMEDIATE AND REAR	4
11	PAHZZ	5340012097802	19207	12339244-3	MOUNT,RESILIENT INTERMEDIATE AND REAR.....	4
12	PAHZZ	5342014066962	19207	12339247-3	MOUNT,RESILIENT INTERMEDIATE AND REAR.....	4
13	PAHZZ	5365012144987	34623	5583215	SPACER,RING INTERMEDIATE	4
14	PAHZZ	5305007247265	80204	B1821BH063C475N	SCREW,CAP,HEXAGON H R.H. INTERMEDIATE.....	1
14	PAHZZ	5305007247266	80204	B1821BH063C500N	SCREW,CAP,HEXAGON H L.H. INTERMEDIATE.....	1
15	PAHZZ	5310012527285	19207	12339248-2	WASHER,FLAT REAR.....	2
16	PAHZZ	5305007247254	80204	B1821BH063C400N	SCREW,CAP,HEXAGON H REAR.....	2

END OF FIGURE

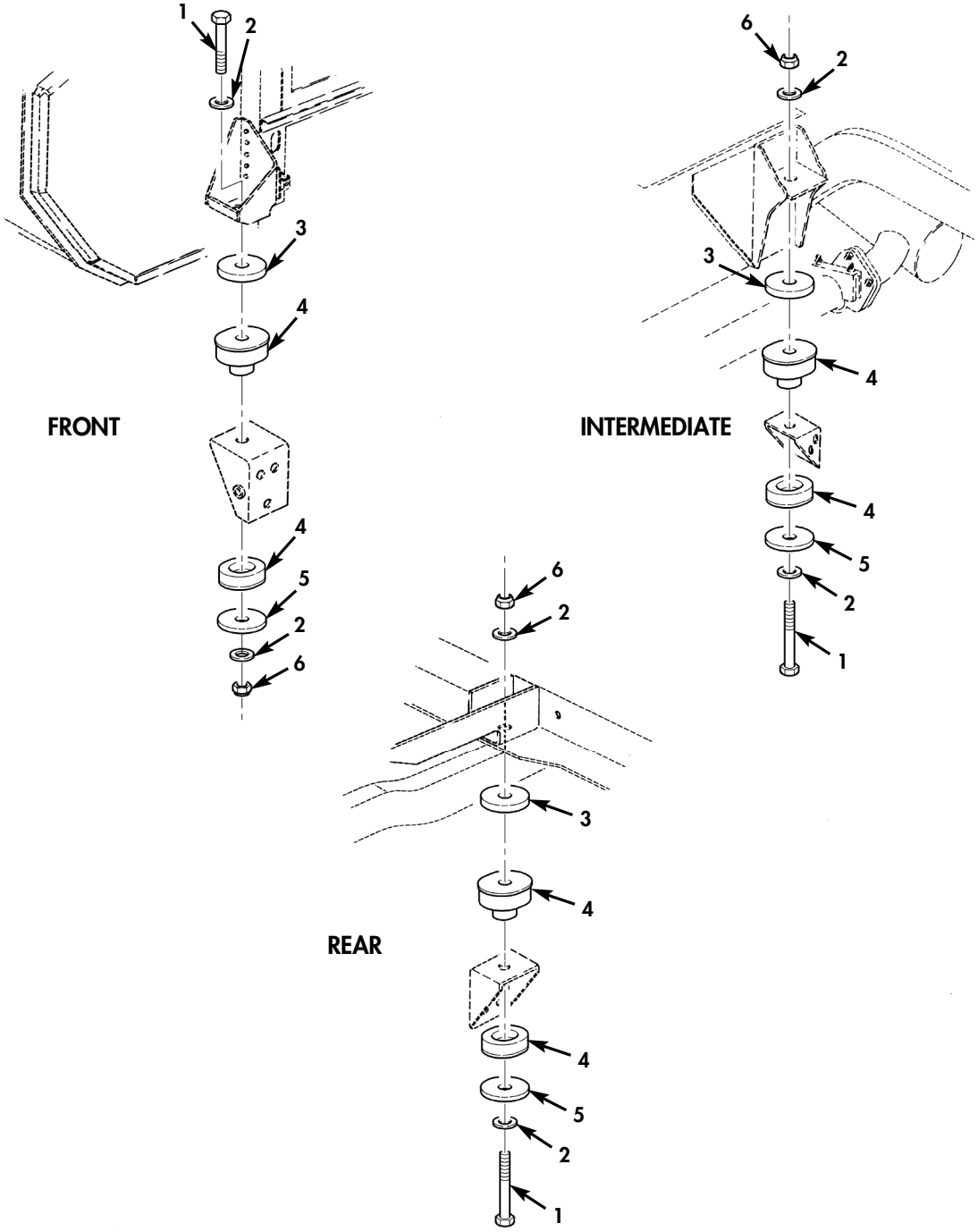

Figure 155A. Body Mounting Components (Serial Number 300000 and Above).

(1) ITEM NO	(2) SMR CODE	(3) NSN	(4) CAGEC	(5) PART NUMBER	(6) DESCRIPTION AND USABLE ON CODES(UOC)	(7) QTY
					GROUP 18 BODY,CAB,HOOD,AND HULL ASSSEMBLY GROUP 1801 BODY,CAB, HOOD,AND HULL ASSSEMBLY	
					FIG. 155A BODY MOUNTING COMPONENTS (SERIAL NUMBER 30000 AND ABOVE)	
* 1	PAHZZ	5305007247264	80204	B1821BH063C450N	SCREW,CAP,HEXAGON H 5/8-11 X 4.50 L.H.,FRONT..... UOC:TTA,TTT,TT1,UUA,UUU,UU1,UU2	1
* 1	PAHZZ	5305007247265	80204	B1821BH063C475N	SCREW,CAP,HEXAGON H 5/8-11 X 4.75 R.H.FRONT,REAR,INTERMEDIATE..... UOC:TTA,TTT,TT1,UUA,UUU,UU1,UU2	5
* 2	PAHZZ	5310011517347	24617	2436167	WASHER,FLAT 5/8..... UOC:TTA,TTT,TT1,UUA,UUU,UU1,UU2	12
* 3	PAHZZ	5310012527285	19207	12339248-2	WASHER,FLAT..... UOC:TTA,TTT,TT1,UUA,UUU,UU1,UU2	6
* 4	PAHZZ	5340015684874	34623	6042800	MOUNT,RESILIENT..... UOC:TTA,TTT,TT1,UUA,UUU,UU1,UU2	6
* 5	PAHZZ	5310014769321	19207	12339248-3	WASHER,FLAT..... UOC:TTA,TTT,TT1,UUA,UUU,UU1,UU2	6
* 6	PAHZZ	5310000614651	81349	M45913/1-10CG8C	NUT,SELF-LOCKING,HE 5/8-11..... UOC:TTA,TTT,TT1,UUA,UUU,UU1,UU2	6

END OF FIGURE

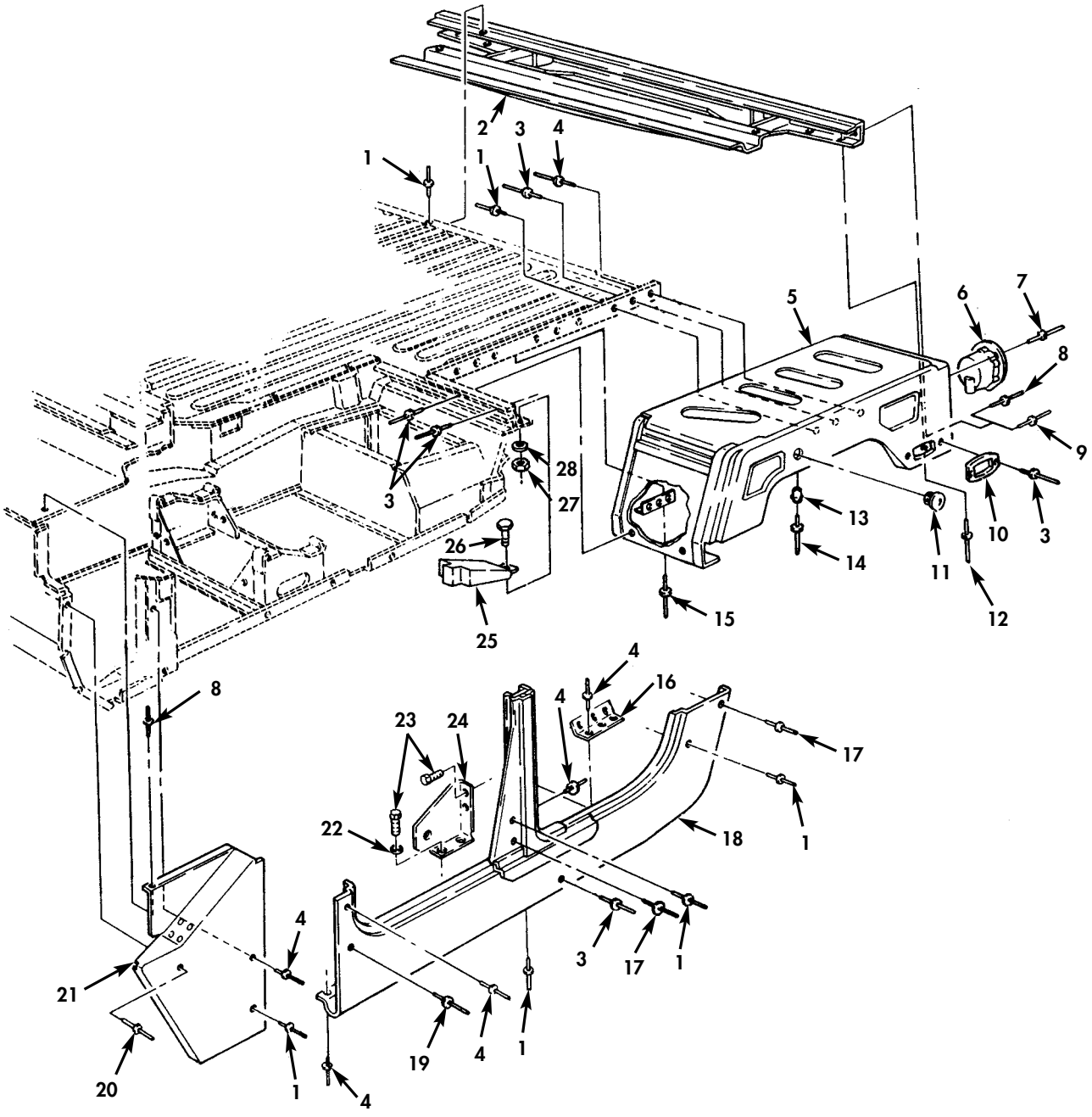

Figure 156. Body Assembly Components, Left Hand (Serial Number 299999 and Below).

(1) ITEM NO	(2) SMR CODE	(3) NSN	(4) CAGEC	(5) PART NUMBER	(6) DESCRIPTION AND USABLE ON CODES(UOC)	(7) QTY
					GROUP 1801 BODY,CAB,HOOD,AND HULL ASSEMBLY	
					FIG. 156 BODY ASSEMBLY COMPONENTS, LEFT HAND(SERIAL NUMBER 299999 AND BELOW)	
1	PAFZZ	5320011361782	11815	CR3213-6-4	RIVET,BLIND OVERSIZE .188-.250 GRIP	21
2	PFFZZ	2590014109968	34623	12446928	BRACKET,VEHICULAR C.....	1
3	PAFZZ	5320010861143	11815	CR3213-6-9	RIVET,BLIND 3/16 DIA. OVERSIZE, .501-.562 GRIP.....	53
4	PAFZZ	5320011357319	11815	CR3213-6-3	RIVET,BLIND 3/16 DIA.OVERSIZE,.126- .187 GRIP.....	101
5	PFFFF	2510013354171	19207	12339701-1	FENDER,VEHICULAR LEFT SIDE REAR....	1
6	PFOZZ	5342011943128	19207	12338711	BRACKET.....	1
7	PAOZZ	5320012751998	11815	BAPKTR-64K2X	RIVET,BLIND 3/16 DIA.,OVERSIZE, .188-.250 GRIP.....	8
8	PAFZZ	5320001176853	80205	MS20470AD6-8	RIVET,SOLID.....	32
9	PAFZZ	5320014076239	80205	NAS9303B-6-06	RIVET,BLIND.....	8
10	PFFZZ	6220012000897	19207	12338709	HOUSING,LIGHT.....	1
11	PAOZZ	5340012031980	28520	2683	CAP-PLUG,PROTECTIVE .922 DIA.....	1
12	PAFZZ	5320010859995	11815	CR3213-6-7	RIVET,BLIND 3/16 DIA.OVERSIZE,.376- .437 GRIP.....	16
13	PAOZZ	5320008646203	17446	6LC-2R06	COLLAR,GROOVED PIN- .288 O.D.,.189 I.D.....	2
14	PAOZZ	5320013335545	81349	M23469/2-30605	PIN-RIVET,GROOVED.....	2
15	PAOZZ	5320007219062	80205	MS20470AD6-10	RIVET,SOLID 3/16 DIA. OVERSIZE, .334-.354 GRIP.....	16
16	PFFZZ	5340012533757	19207	12338667	BRACKET,ANGLE.....	1
17	PAFZZ	5320010849235	80205	NAS9301BNS-6-05	RIVET,BLIND 3/16 DIA. OVERSIZE .251-312 GRIP.....	7
18	PFFZZ	2510013357799	19207	12339698-3	PANEL,BODY,VEHICULA SIDE,L.H.....	1
19	PAFZZ	5320010846101	80205	NAS9302BNS-6-03	RIVET,BLIND 3/16 DIA.,OVERSIZE, .126-.187 GRIP.....	3
20	PAFZZ	5320011435075	11815	CR3213-6-2	RIVET,BLIND 3/16 DIA.,OVERSIZE, .126-.187.....	21
21	PAFZZ	2510011863106	19207	12338734	COWL PANEL,VEHICULA FRONT,L.H.....	1
22	PAOZZ	5310008094058	96906	MS27183-10	WASHER,FLAT 1/4.....	2
23	PAOZZ	5305000687837	80204	B1821BH025C063N	SCREW,CAP,HEXAGON H 1/4-20 X 5/8...	4
24	PAOZZ	5340012468282	19207	12339988-1	BRACKET,MOUNTING L.H.....	1
25	PFFZZ	5330012525377	34623	5581162	SEAL ASSEMBLY LEFT SIDE FRONT.....	1
26	PAFZZ	5305002400194	96906	MS51849-76	SCREW,MACHINE #10-24 X 3/4.....	1
27	PAFZZ	5310011861245	7X677	9423869	NUT,SELF-LOCKING,HE #10-24.....	1
28	PAFZZ	5310000145850	96906	MS27183-42	WASHER,FLAT #10.....	1

END OF FIGURE

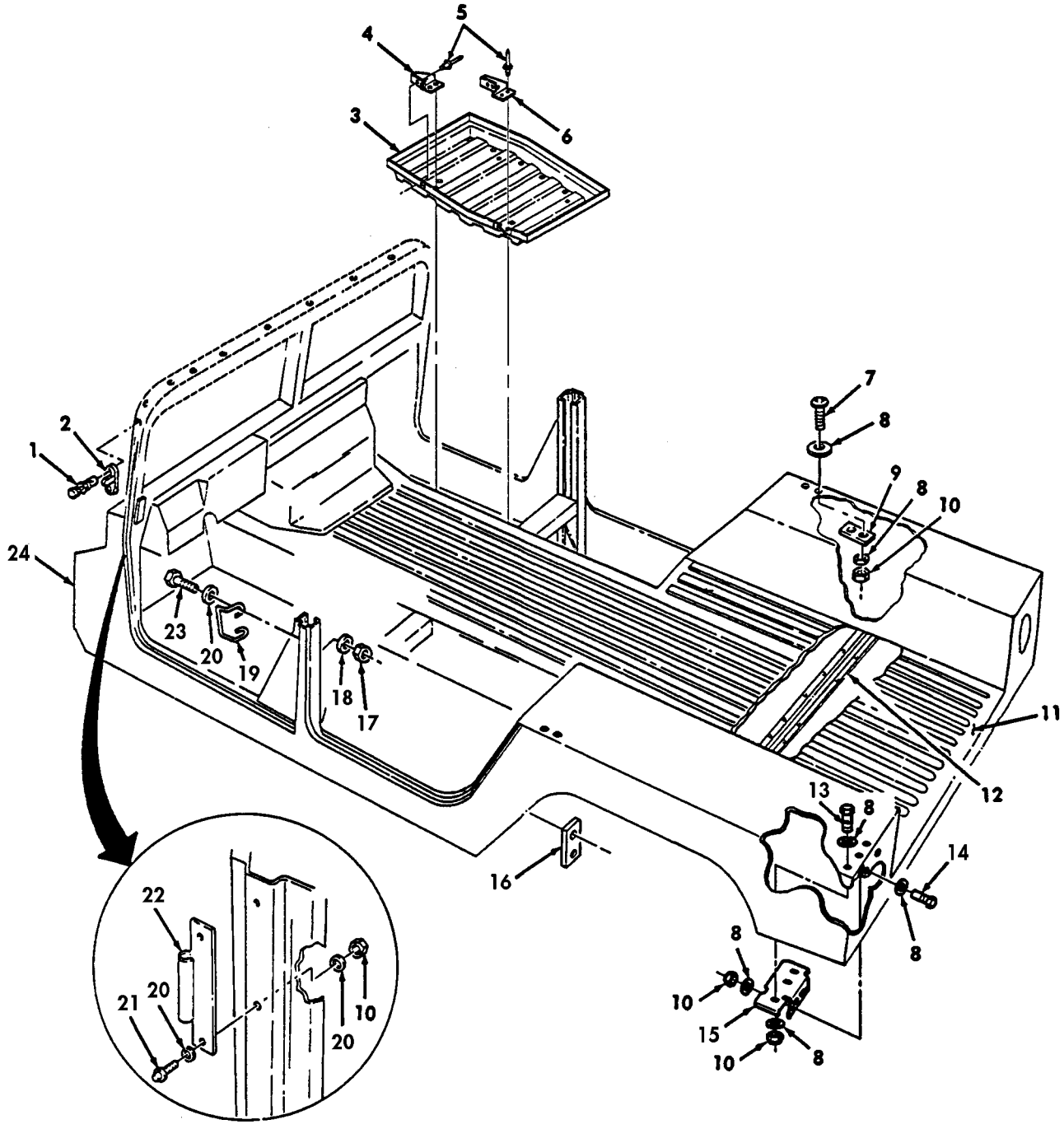

Figure 157. Body Assembly and Related Parts.

(1) ITEM NO	(2) SMR CODE	(3) NSN	(4) CAGEC	(5) PART NUMBER	(6) DESCRIPTION AND USABLE ON CODES(UOC)	(7) QTY
					GROUP 1801 BODY,CAB,HOOD,AND HULL ASSEMBLY	
					FIG. 157 BODY ASSEMBLY AND RELATED PARTS	
1	PAOZZ	5320010232529	81349	M24243/1-A404	RIVET,BLIND 1/8 DIA..... UOC:XAA	4
2	PAOZZ	5325008235999	13940	XB78323-05001	STUD,TURNBUTTON FAS WINDSHIELD..... UOC:XAA	2
3	PAOZZ	6160014704172	19207	12338765	TRAY,BATTERY FLOOR PAN.....	1
4	PAOZZ	5340014707135	19207	12339904	BRACKET,BATTERY FRONT.....	1
5	PAOZZ	5320007540992	80205	MS20470AD6-7	RIVET,SOLID.....	8
6	PAOZZ	5340014707160	19207	12339905	BRACKET,BATTERY REAR.....	1
7	PAOZZ	5305000680509	80204	B1821BH025C125N	SCREW,MACHINE 1/4-20 X 1.25..... UOC:XAA	4
* 8	PAOZZ	5310008094058	96906	MS27183-10	WASHER,FLAT 1/4..... UOC:XAA	32
9	PAOZZ	5340012559510	19207	12339009	PLATE,MENDING REINFORCEMENT,C-PILLAR..... UOC:XAA	2
10	PAOZZ	5310014326727	24617	9419471	NUT,SELF-LOCKING,HE 1/4-20..... UOC:XAA	24
10	PAOZZ	5310014326727	24617	9419471	NUT,SELF-LOCKING,HE 1/4-20..... UOC:XBB	12
11	PBFHH	2510012626010	34623	5588702	PANEL,BODY,VEHICULA CARGO FLOOR.... PANEL REPAIR,24 X 24 INCHES	1
* 12	PFFHZ	2510012626007	19207	12338740-1	FRAME SECTION,STRU CARGO FLOOR SUPPORT.....	3
13	PAOZZ	5305012114505	51387	180021	SCREW,CAP,HEXAGON H.....	8
* 14	PAOZZ	5306013714685	29510	180022	BOLT,MACHINE.....	4
* 15	PAOZZ	5340014705892	19207	12339031-1	BRACKET,RETAINER L.H.....	1
* 15	PAOZZ	5340014336262	19207	12339031-2	BRACKET,RETAINER R.H.....	1
* 16	PAOZZ	5340011975477	19207	12339006	RETAINER,ASSEMBLED REAR DOOR STRIKER UOC:XAA	2
* 17	PAOZZ	5310002416658	81349	M45913/3-5FG8C	NUT,SELF-LOCKING,HE 5/16-24..... UOC:XAA	4
* 18	PAOZZ	5310000814219	96906	MS27183-12	WASHER,FLAT 5/16..... UOC:XAA	8
* 19	PAOZZ	5340012070717	34623	5581362	BUCKLE FRONT..... UOC:XAA	2
* 20	PAOZZ	5310011023270	24617	2436161	WASHER,,FLAT 1/4..... UOC:XAA	20
* 21	PAOZZ	5306013235534	19207	12340352-2	BOLT,MACHINE TOP FRONT HINGE,1/4-20 X 7/8,2-DOOR..... UOC:XAA	8
* 22	PAOZZ	5342012032822	19207	12338650	MOUNT,RESILIENT..... UOC:XAA	4
* 23	PAOZZ	5306001822027	88044	AN5H10A	BOLT,MACHINE 5/16-24 X 1.00..... UOC:XAA	4
* 24	PBHHH	2510014745371	34623	RCSK17178	FRAME SECTION,STRU REPLACEMENT BODY ASSEMBLY..... UOC:XBB	1
* 24	PBHHH	2510014609080	34623	RCSK17178-1	BODY,UTILITY VEHICL REPLACEMENT BODY ASSEMBLY..... UOC:XAA	1

END OF FIGURE

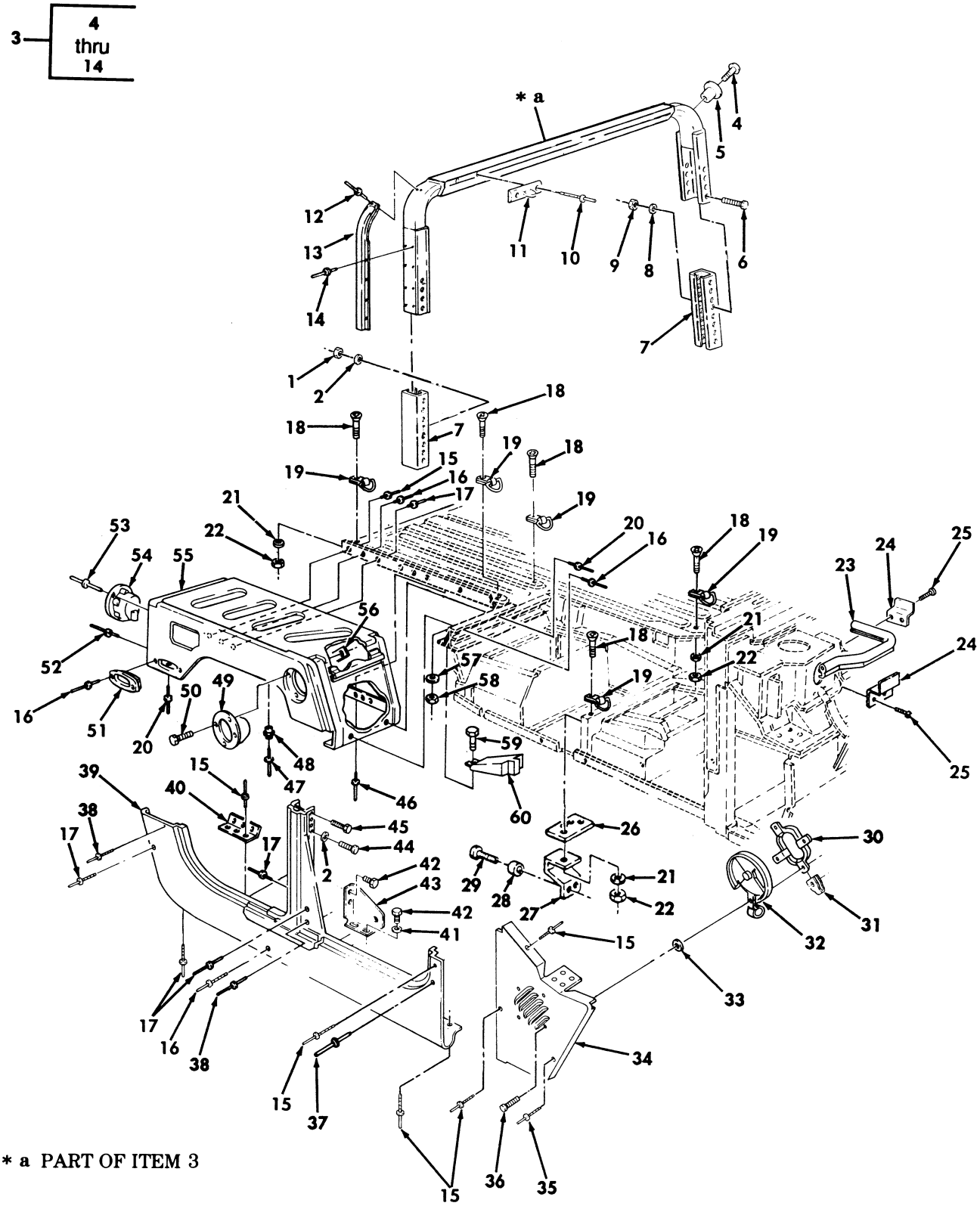

Figure 158. Body Assembly Components, Right Hand.

(1) ITEM NO	(2) SMR CODE	(3) NSN	(4) CAGEC	(5) PART NUMBER	(6) DESCRIPTION AND USABLE ON CODES(UOC)	(7) QTY
					GROUP 1801 BODY,CAB,HOOD,AND HULL ASSEMBLY	
					FIG. 158 BODY ASSEMBLY COMPONENTS, RIGHT HAND	
1	PAOZZ	5310002416658	81349	M45913/3-5FG8C	NUT,SELF-LOCKING,HE 5/16-24..... UOC:XAA	16
2	PAOZZ	5310000814219	96906	MS27183-12	WASHER,FLAT 5/16..... UOC:XAA	20
* 3	PAOFF	2540013354482	19207	12339196-1	ROLL BAR,VEHICULAR "B" PILLAR..... UOC:XAA	1
4	PAOZZ	5305011858647	7X677	160057	.SCREW,MACHINE #10-32 X 3/4..... UOC:XAA	2
5	PAOZZ	5310007557283	19207	12339397-1	.NUT,SELLVE #10-32..... UOC:XAA	2
6	PAOZZ	5306001822025	88044	AN5H6A	.BOLT,MACHINE 5/16-24 X 7/8..... UOC:XAA	16
7	PAOZZ	2590012477910	19207	12339194	.BLOCK,CONNECTOR,ROL..... UOC:XAA	2
8	PAOZZ	5310000814219	96906	MS27183-12	.WASHER,FLAT 5/16..... UOC:XAA	16
9	PAOZZ	5310009843807	24617	9419476	.NUT,SELF-LOCKING,HE 5/16-24..... UOC:XAA	16
10	PAOZZ	5320010233529	81349	M24243/1-A404	.RIVET,BLIND 1/8 DIA.,.188- .250 GRIP.....	46
11	PAOZZ	5325008235999	13940	XB78323-05001	.STUD,TURNBUTTON FAS..... UOC:XAA	23
12	PAOZZ	5320012716357	9K475	MGLP-B6-4	.RIVET,BLIND BAR,.062- .270 GRIP... UOC:XAA	16
* 13	XAOZZ		19207	12339188	.RABBET,'B' ROLL BAR..... UOC:XAA	2
14	PAOZZ	5320012645978	19207	12339355-2	.RIVET,BLIND .214-.437 GRIP..... UOC:XAA	4
15	PAFZZ	5320011357319	11815	CR3213-6-3	RIVET,BLIND 3/16 DIA.,OVERSIZE, .126- .187 GRIP..... UOC:XAA	130
16	PAFZZ	5320010861143	11815	CR3213-6-9	RIVET,BLIND 3/16 DIA. OVERSIZE.....	52
17	PAFZZ	5320011361782	11815	CR3213-6-4	RIVET,BLIND 3/16 DIA.,.188-.250 GRIP.....	21
18	PAOZZ	5305000522232	96906	MS24667-77	SCREW,CAP SOCKET HE 1/2-13 X 1.75..	8
19	PAOZZ	3990014325370	19207	12446987	TIE DOWN,CARGO VEHI.....	2
20	PAFZZ	5320010859995	11815	CR3213-6-7	RIVET,BLIND 3/16 DIA.,OVERSIZE.....	17
21	PAOZZ	5310001670823	88044	AN960-816	WASHER,FLAT 1/2.....	8
22	PAOZZ	5310004883889	96906	MS51943-39	NUT,SELF-LOCKING,HE 1/2-13.....	8
23	MOOZZ		34623	5581213	SEAL,RUBBER UPPER HOOD,R.H.,COWL, MAKE FROM SEAL,NONMETALLIC P/N 1403, 17.25 INCHES LONG.....	1
24	PAOZZ	5340014605291	19207	12340869	BRACKET,DOUBLE ANGL FRONT SIDE.....	1
24	PAOZZ	5340012070379	19207	12338814	BRACKET,DOUBLE ANGL INNER,HOOD SEAL	1
25	PAOZZ	5305012542460	34623	5592840	SCREW,TAPPING THREA #10-16 X 1/2...	4
26	PAFZZ	2510014112736	19207	12338670	FRAME SECTION,STRUC.....	3

(1) ITEM NO	(2) SMR CODE	(3) NSN	(4) CAGEC	(5) PART NUMBER	(6) DESCRIPTION AND USABLE ON CODES(UOC)	(7) QTY
27	PAFZZ	2510014107169	19207	12446988	FRAME SECTION,STRUC.....	3
28	PAFZZ	5320010447545	80205	NAS1080R08	COLLAR,GROOVED PIN-.....	6
* 29	XAOZZ		81349	M23469/2-50809	PIN-RIVET,GROOVED.....	6
30	PFOZZ	2540011924500	19207	12338849	RETAINER,AIR DUCT.....	1
31	PAOZZ	5310012155356	78553	C8117-1024	NUT,SHEET SPRING #10-24.....	4
32	PFOZZ	2510011925947	19207	12339222	GRILLE,METAL.....	1
33	PAOZZ	5310000145850	96906	MS27183-42	WASHER,FLAT #10.....	3
34	PFFZZ	2510011863107	19207	12338716	COWL PANEL,VEHICULA OUTER,R.H.....	1
35	PAFZZ	5320011435075	11815	CR3213-6-2	RIVET,BLIND 3/16 DIA.,OVERSIZE, .062-.125 GRIP.....	5
* 36	PAOZZ	5305004324204	96906	MS51861-48	SCREW,TAPPING #10-24 X 7/8.....	4
37	PAFZZ	5320010846101	11815	CR3212-6-3	RIVET,BLIND 3/16 DIA.,OVERSIZE, .126-287 GRIP.....	3
38	PAFZZ	5320010849235	11815	CR3213-6-5	RIVET,BLIND 3/16 DIA.,OVERSIZE, .251-.312 GRIP.....	7
39	PFFZZ	2510013618213	34623	12339698-4	PANEL,BODY,VEHICULA R.H.....	1
40	PFFZZ	5340012533757	34623	5575418	BRACKET,ANGLE.....	1
41	PAOZZ	5310008238803	96906	MS27183-21	WASHER,FLAT 1/4.....	2
42	PAOZZ	5305000687837	80204	B1821BH025C063N	SCREW,CAP,HEXAGON H 1/4-20 X 5/8...	4
43	PAOZZ	5340012487646	19207	12339988-2	BRACKET,MOUNTING R.H.....	1
44	PAOZZ	5306001822027	88044	AN5H10A	BOLT,MACHINE 5/16-24 X 1.25.....	4
45	PAOZZ	5306001822025	88044	AN5H6A	BOLT,MACHINE 5/16-24 X 27/32.....	12
46	PAFZZ	5320007219062	80205	MS20470AD6-10	RIVET,SOLID 3/16 DIA.,OVERSIZE, .334-.354 GRIP.....	16
47	PAFZZ	5320013335545	81349	M23469/2-30605	PIN-RIVET,GROOVED.....	2
48	PAFZZ	5320008646203	17446	6LC-2R06	COLLAR,GROOVED PIN- .288 O.D.,.189 I.D.....	2
49	PFOZZ	2590011975446	19207	12339048	FILLER NECK.....	1
50	PAOZZ	5305012645874	19207	12340792	SCREW,TAPPING #10-12 X .75.....	6
51	PFOZZ	6220012000897	19207	12338709	HOUSING,LIGHT RIGHT SIDE,REAR.....	1
52	PAFZZ	5320001176853	80205	MS20470AD6-8	RIVET,SOLID 3/16 DIA.,OVERSIZE, .356-.394 GRIP.....	18
53	PAOZZ	5320012751998	11815	BAPKTR-64	RIVET,BLIND 3/16 DIA.,OVERSIZE, .188-.250 GRIP.....	8
* 54	PFOZZ	5342011943128	19207	12338711	BRACKET.....	1
55	PFFZZ	2510013354170	19207	12339707-1	FENDER,VEHICULAR RIGHT REAR.....	1
56	PAOZZ	5310011947066	72800	C7685-10A	NUT,SHEET SPRING.....	6
57	PAFZZ	5310000145850	96906	MS27183-42	WASHER,FLAT #10.....	1
58	PAFZZ	5310012530058	34623	5592999	NUT,SELF-LOCKING,EX #10-24.....	1
59	PAFZZ	5305002400194	96906	MS51849-76	SCREW,MACHINE #10-24 X 3/4.....	1
60	PFFZZ	5330012525378	34623	5581163	SEAL ASSEMBLY RIGHT SIDE FRONT.....	1

END OF FIGURE

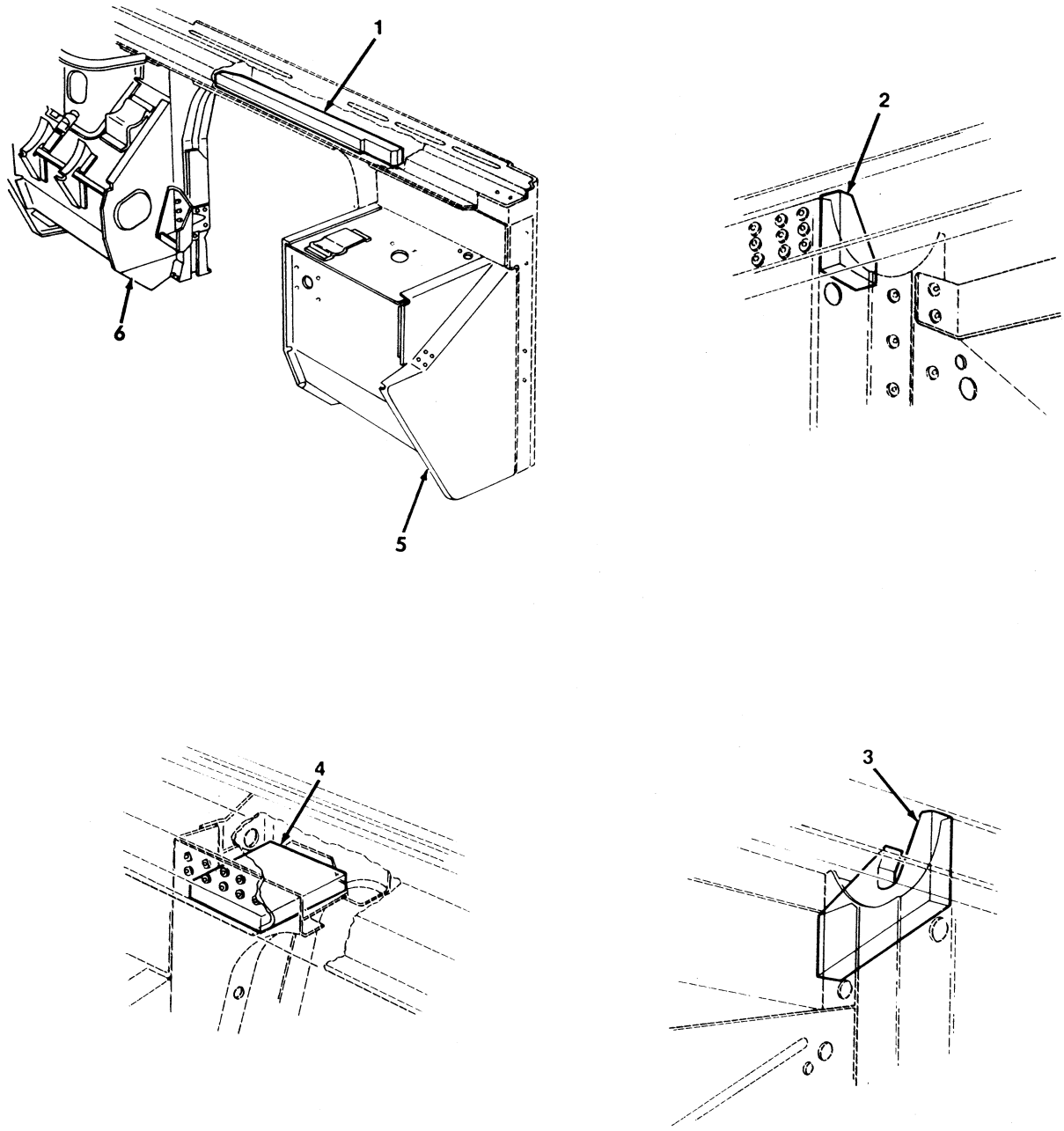

Figure 159. Body Insulation and Cowl Assemblies.

(1) ITEM NO	(2) SMR CODE	(3) NSN	(4) CAGEC	(5) PART NUMBER	(6) DESCRIPTION AND USABLE ON CODES(UOC)	(7) QTY
					GROUP 1801 BODY,CAB,HOOD,AND HULL ASSEMBLY	
					FIG. 159 BODY INSULATION AND COWL ASSEMBLIES	
1	PAOZZ	5640013093867	34623	12341888	INSULATION,FILLER CENTER.....	1
2	PAOZZ	5640013093868	34623	12341889	INSULATION,PANEL.....	1
3	PAOZZ	5640013093870	34623	SF-5597693	INSULATION,CLOSEOUT LEFT HAND.....	1
4	PAOZZ	5640013093866	34623	SF-5597692	INSULATION,NOZZLE RIGHT HAND NOZZLE	1
5	PFFHH	2510014651512	34623	RCSK18242	PANEL,BODY,VEHICULA L.H.....	1
6	PFFHH	2510012626009	19207	12338719	COWL,HOOD,VEHICULAR R.H.....	1

END OF FIGURE

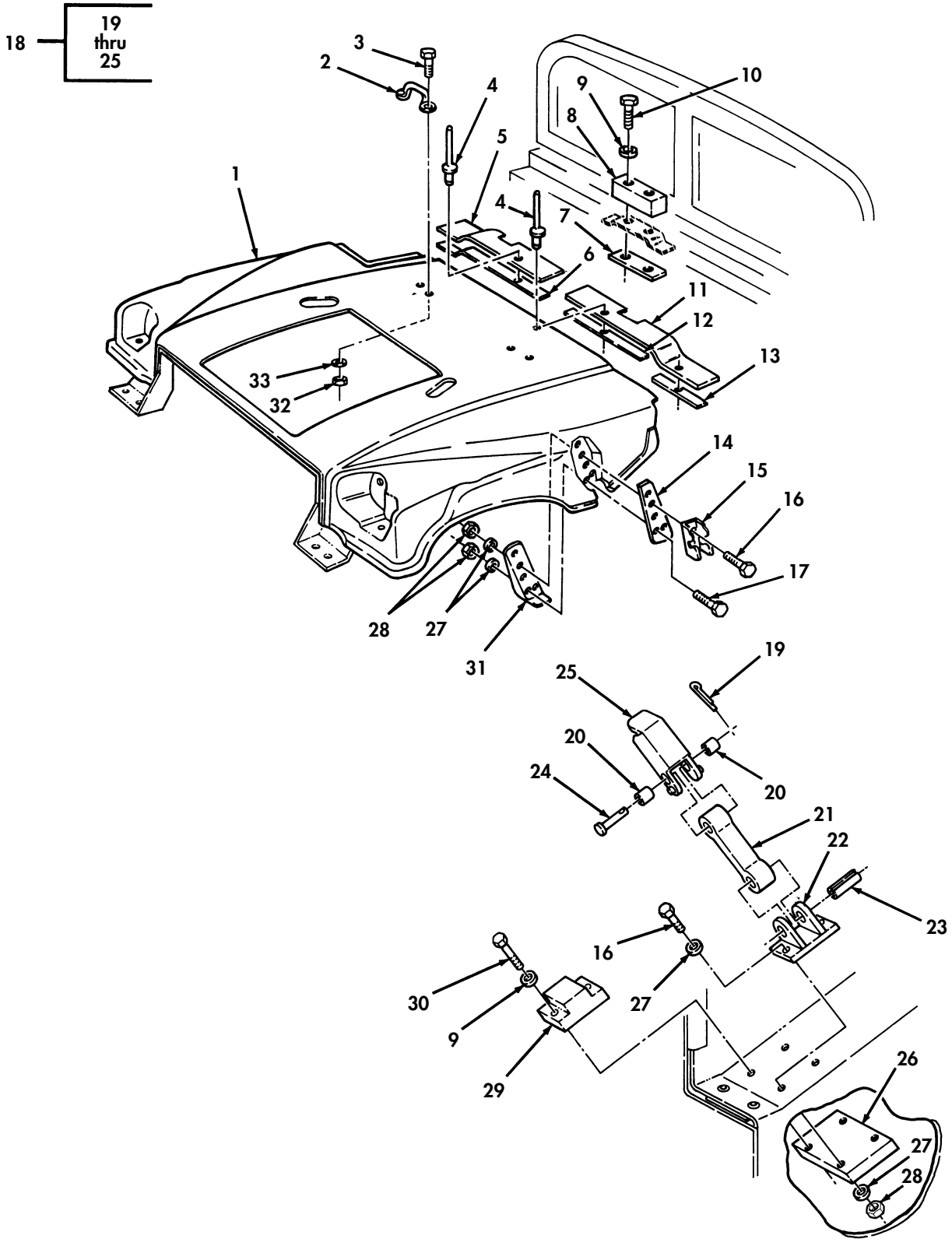

Figure 160. Hood Assembly and Mounting Hardware.

(1) ITEM NO	(2) SMR CODE	(3) NSN	(4) CAGEC	(5) PART NUMBER	(6) DESCRIPTION AND USABLE ON CODES(UOC)	(7) QTY
					GROUP 1801 BODY,CAB,HOOD,AND HULL ASSEMBLY	
					FIG. 160 HOOD ASSEMBLY AND MOUNTING HARDWARE	
* 1	PAOFF	2510014323338	19207	12469257	HOOD,ENGINE COMPART.....	1
2	PAOZZ	5340012135735	34623	5591648	LOOP,STRAP FASTNER..... UOC:XAA	2
3	PAOZZ	5305009846212	96906	MS35206-265	SCREW,MACHINE..... UOC:XAA	4
4	PAOZZ	5320012556608	8J942	SSLQ-68	RIVET,SOLID 3/16 DIA, .376-.500 GRIP.....	15
5	PAOZZ	5330012550207	34623	5591313	SEAL,NONMETALLIC ST REAR R.H.....	1
6	PFOZZ	2590012612636	19207	12338904	BEZEL,AUTOMOTIVE TR REAR R.H.....	1
7	PAOZZ	5340012662995	34263	5590550	PLATE,MENDING.....	1
8	PAOZZ	5340011867658	34623	5588172	BUMPER,NONMETALLIC.....	1
9	PAOZZ	5310012183190	19207	12339433	WASHER,FLAT.....	6
10	PAOZZ	5305002553843	80204	B1821BH025C100N	SCREW,CAP,HEXAGON H 1/4-20 x 1.00..	2
11	PAOZZ	5330012550208	34623	5591315	SEAL,NONMETALLIC ST REAR L.H.....	1
* 12	PFOZZ	2590012612637	19207	12338907	MOLDING,METAL REAR L.H.....	1
13	PFOZZ	2590012615484	19207	12338902	MOLDING,METAL REAR R.H.....	1
14	PFOZZ	5340012113132	34623	5584963	PLATE,MENDING.....	2
15	PAOZZ	5340011899979	34623	5588179	STRIKE,CATCH.....	2
16	PAOZZ	5305000225384	80204	B1821BH025C113N	BOLT,MACHINE 1/4-20 X 1.125.....	8
17	PAOZZ	5305000712505	80204	B1821BH025C088N	SCREW,CAP,HEXAGON H 1/4-20 X 7/8...	6
18	PAOOO	2540011859530	19207	12338909	LATCH,HOOD,VEHICULA.....	2
19	PAOZZ	5315008395820	80205	MS24665-134	.PIN,COTTER.....	1
20	PAOZZ	5365012124736	19207	12338886	.SPACER,SLEEVE.....	2
21	PAOZZ	2540012125814	19207	12338889	.LATCH,HOOD VEHICULA.....	1
22	PAOZZ	2510012090502	19207	12338880	.BASE,HOOD LATCH.....	1
23	PAOZZ	5315007533895	80205	MS15562-256	.PIN,SPRING.....	1
24	PAOZZ	5315012135545	19207	12338894	.PIN,STRAIGHT HEADED.....	1
25	PAOZZ	2540012094590	19207	12338891	.LATCH,HOOD VEHICULA.....	1
26	PAOZZ	5340014401351	6W728	4660871	PLATE,MOUNTING HOOD LATCH..... UOC:XBB	2
27	PAOZZ	5310011023270	24617	2436161	WASHER,FLAT 1/4..... UOC:XAA	22
27	PAOZZ	5310011023270	24617	2436161	WASHER,FLAT 1/4..... UOC:XBB	14
* 28	PAOZZ	5310000614650	96906	M45913/3-4CG8C	NUT,SELF-LOCKING,HE 1/4-20..... UOC:XAA	18
* 28	PAOZZ	5310000614650	96906	M45913/3-4CG8C	NUT,SELF-LOCKING,HE 1/4-20..... UOC:XBB	10
29	PAOZZ	5340011858821	34623	5588167	BUMPER,NONMETALLIC.....	1
30	PAOZZ	5306012668274	34623	9419011	BOLT,MACHINE 1/4-20 X 1.75..... UOC:XAA	4
30	PAOZZ	5306014339185	6W728	4397000-013	BOLT,MACHINE 1/4-20 X 1.75..... UOC:XBB	4
31	PFOZZ	2510011856715	19207	12338905	BRACKET,HOOD VEHICU.....	2
32	PAOZZ	5310002081918	88044	AN365-1024A	NUT,SELF-LOCKING,HE #10-24..... UOC:XAA	4
33	PAOZZ	5310000145850	96906	MS27183-42	WASHER,FLAT #10..... UOC:XAA	4

END OF FIGURE

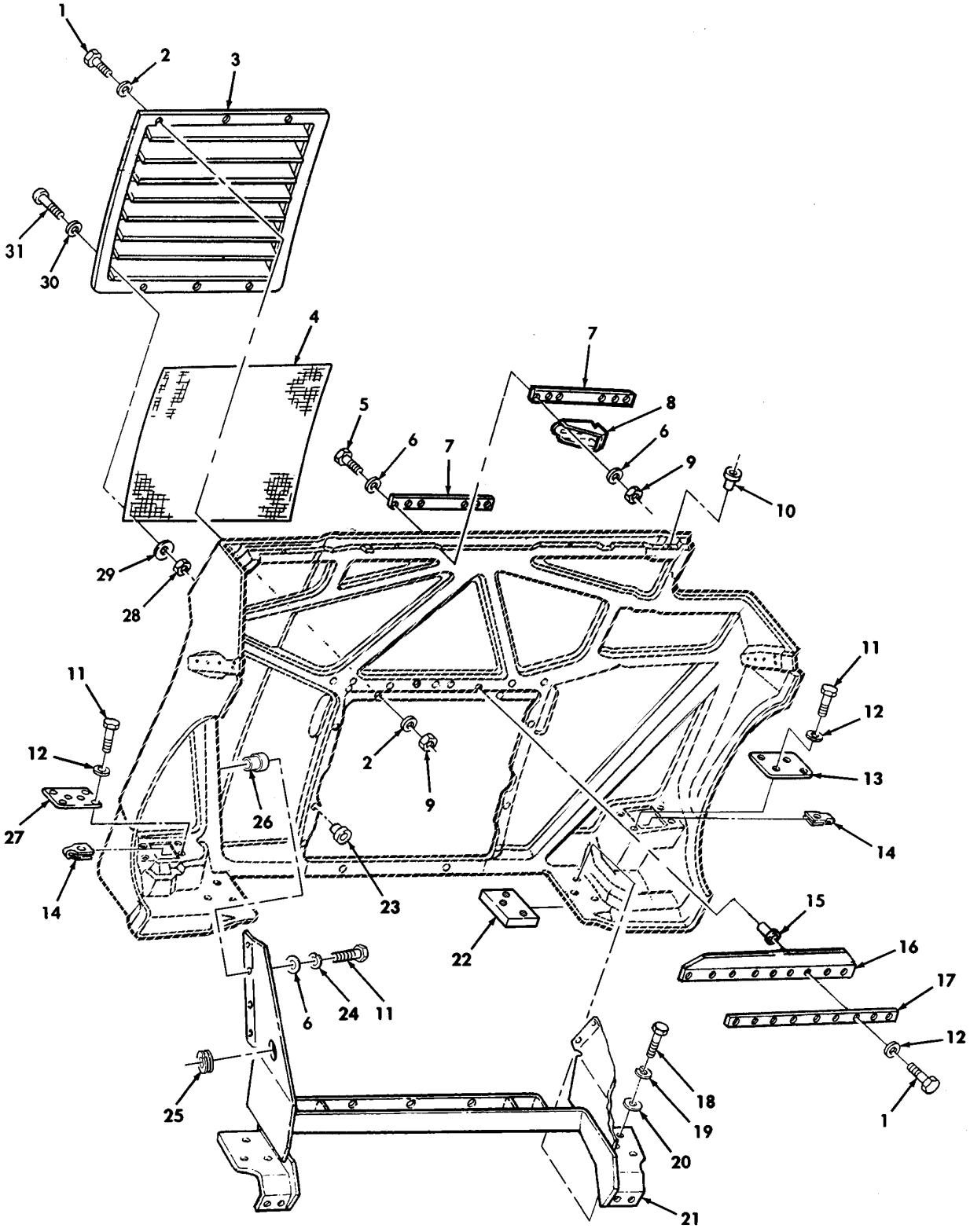

Figure 161. Hood Assembly Grille and Related Parts.

(1) ITEM NO	(2) SMR CODE	(3) NSN	(4) CAGEC	(5) PART NUMBER	(6) DESCRIPTION AND USABLE ON CODES(UOC)	(7) QTY
					GROUP 1801 BODY,CAB,HOOD,AND HULL ASSEMBLY	
					FIG. 161 HOOD ASSEMBLY GRILLE AND RELATED PARTS	
1	PAOZZ	5305002253843	80204	B1821BH025C100N	SCREW,CAP,HEXAGON H 1/4-20 X 1.00..	23
2	PAOZZ	5310008093078	96906	MS27183-11	WASHER,FLAT 1/4.....	28
3	PAOZZ	2510013504949	34623	12342408	GRILLE,RADIATOR,VEH.....	1
4	PAOZZ	2510011965311	34623	5578749	SCREEN,GRILLE TOP.....	1
5	PAOZZ	5305002253842	80204	B1821BH025C113N	SCREW,CAP,HEXAGON H 1/4-20 X 1.125.	6
* 6	PAOZZ	5310011023270	24617	2436161	WASHER,FLAT 1/4.....	20
7	PAOZZ	5365012101629	19207	12338903	SPACER,PLATE.....	2
8	PFOZZ	5340011858619	19207	12338899	BRACKET,ANGLE.....	2
* 9	PAOZZ	5310000614650	96906	M45913/-34CG8C	NUT,SELF-LOCKING,HE 1/4-20.....	12
10	PAOZZ	5340010263250	81349	M5501/7-F2	CAP-PLUG,PROTECTIVE.....	4
11	PAOZZ	5305000680508	80204	B1821BH025C075N	SCREW,CAP,HEXAGON H 1/4-20 X 3/4...	15
12	PAOZZ	5310008094058	96906	MS27183-10	WASHER,FLAT 1/4.....	16
13	PFOZZ	5340012117436	19207	12338884	COVER,ACCESS R.H.....	1
14	PAOZZ	5310012536439	78563	C7740-1420-1	NUT,SHEET SPRING.....	7
15	PAOZZ	5340012134662	19207	12339397-4	SHIELD,EXPANSION 1/4-20.....	9
16	PAOZZ	5330011928916	19207	12338911	SEAL,NONMETALLIC SP CENTER.....	1
17	PAOZZ	5340011913222	19207	12338885	PLATE,MENDING.....	1
18	PAOZZ	5305000680511	80204	B1821BH038C125N	SCREW,CAP,HEXAGON H 3/8-16 x 1.25..	6
* 19	PAOZZ	5310006379541	80205	MS35338-46	WASHER,LOCK 3/8.....	6
20	PAOZZ	5310000806004	96906	MS27183-14	WASHER,FLAT 3/8.....	6
21	PAOZZ	2510014397087	34623	RCSK18754	FRAME,STRUCTURAL,VE.....	1
22	PAOZZ	5310014959438	19207	12469280	PLATE,MOUNTING.....	2
23	PAOZZ	5340012551657	99017	W-5	CAP-PLUG,PROTECTIVE.....	6
* 24	PAOZZ	5310005825965	80205	MS35338-44	WASHER,LOCK 1/4.....	8
* 25	PAOZZ	5325001749332	96906	MS35489-48	GROMMET,NONMETALLIC.....	2
* 26	PAOZZ	5310011981722	34623	5982526	NUT,PLAIN,BLIND RIV.....	8
* 27	PFOZZ	5340012097834	19207	12338906	COVER,ACCESS L.H.....	1
* 28	PAOZZ	5310002081918	72962	SN-104-NM-22	NUT,SELF-LOCKING,HE #10-24.....	6
* 29	PAOZZ	5310002081918	24617	9417714	WASHER,FLAT #10.....	6
* 30	PAOZZ	5310000145850	96906	MS27183-42	WASHER,FLAT #10.....	6
* 31	PAOZZ	5305009846213	96906	MS35206-266	SCREW,MACHINE #10-24 X 7/8.....	6

END OF FIGURE

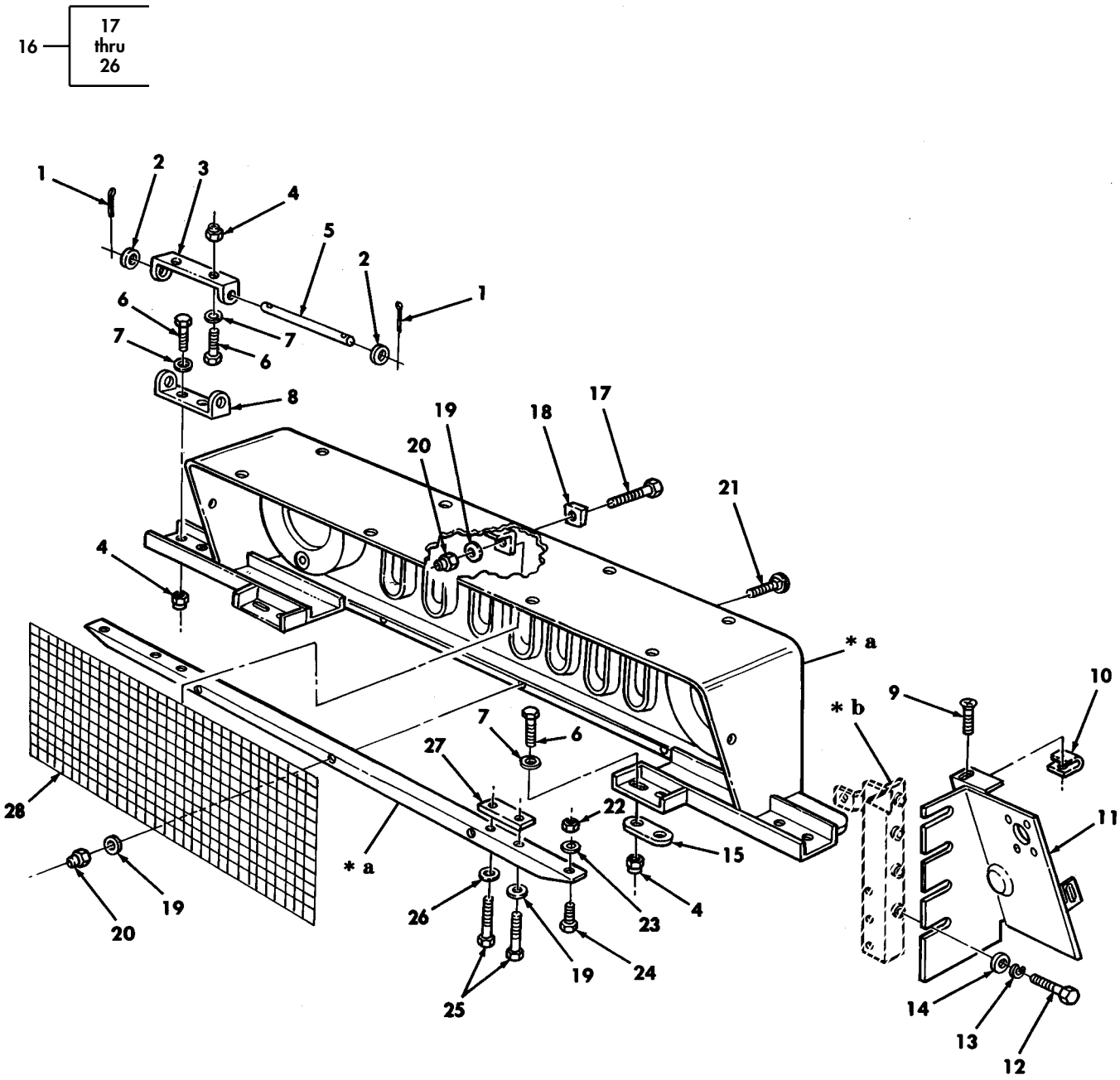

✱ **a** PART OF ITEM 16
✱ **b** SEE FIGURE 163, ITEM 33
✱ **b** SEE FIGURE 164, ITEM 17

Figure 162. Grille Frame Mounting Assembly.

(1) ITEM NO	(2) SMR CODE	(3) NSN	(4) CAGEC	(5) PART NUMBER	(6) DESCRIPTION AND USABLE ON CODES(UOC)	(7) QTY
					GROUP 1801 BODY,CAB,HOOD,AND HULL ASSEMBLY	
					FIG. 162 GRILLE FRAME MOUNTING ASSEMBLY	
1	PAOZZ	5315008392326	80205	MS24665-281	PIN,COTTER 3/32 X 1/2.....	4
2	PAOZZ	5310014124013	24617	2436163	WASHER,FLAT 3/8.....	4
3	PAOZZ	5340011869496	34623	5578522	LEAF,BUTT HINGE UPPER.....	2
4	PAOZZ	5310011504003	24617	9422299	NUT,SELF-LOCKING,HE 7/16-14.....	12
5	PAOZZ	5315011865633	19207	12338893	PIN,STRAIGHT,HEADLE.....	2
6	PAOZZ	5305000711788	80204	B1821BH044C125N	SCREW,CAP,HEXAGON H 7/16-14 X 1.25.	12
7	PAOZZ	5310008094085	96906	MS27183-16	WASHER,FLAT 7/16.....	12
8	PAOZZ	5340011861388	19207	12338900	LEAF,BUTT HINGE LOWER.....	2
* 9	PAOZZ	5305009543937	80205	MS35190-290	SCREW,MACHINE 1/4-20 X .875.....	4
* 10	PAOZZ	5310012536439	19207	12339425	NUT,SHEET SPRING 1/4-20.....	4
* 11	PAOZZ	2540014559322	34623	RCSK17519	GUARD,SPLASH,VEHICU R.H.....	1
* 11	PAOZZ	5340014337907	34623	RCSK17518	GUARD,SPLASH,VEHICU L.H.....	1
* 12	PAOZZ	5305000680508	80204	B1821BH025C075N	SCREW,CAP,HEXAGON H 1/4-20 X 3/4...	8
* 13	PAOZZ	5310005501130	96906	MS35333-40	WASHER,LOCK 1/4.....	8
* 14	PAOZZ	5310008094058	96906	MS27183-10	WASHER,FLAT 1/4.....	8
* 15	PAOZZ	5365012122325	19207	12338879	SPACER,PLATE.....	2
* 16	PAOZZ	2510014347238	34623	RCSK17040	GRILLE,METAL.....	1
* 17	PAOZZ	5306002264833	80204	B1821BH031C200N	.BOLT,MACHINE 5/16-18 X 2.00.....	3
* 18	PAOZZ	5365013821178	19207	12446736	.SPACER,TAPERED.....	3
* 19	PAOZZ	5310000806004	96906	MS27183-14	.WASHER,FLAT 3/8.....	8
* 20	PAOZZ	5310009318167	96906	MS51967-6	.NUT,PLAIN,HEXAGON 5/16-18.....	6
* 21	PAOZZ	5306012867182	34623	5588062	.BOLT,SQUARE NECK 5/16-18 X 1.80...	3
* 22	PAOZZ	5310000614650	96906	M45913/3-4CG8C	.NUT,SELF-LOCKING,HE 1/4-20.....	2
* 23	PAOZZ	5310008094058	96906	MS27183-10	.WASHER,FLAT 1/4.....	2
* 24	PAOZZ	5305002253843	80204	B1821BH025C100N	.SCREW,CAP,HEXAGON H 1/4-20 X 1.00.	2
* 25	PAOZZ	5305006388920	80204	B1821BH038C225N	.SCREW,CAP,HEXAGON H 3/8-16 X 2.25.	4
* 26	PAOZZ	5310012866077	19207	12341856	.WASHER,FLAT .450.....	2
* 27	PAOZZ	5340014561503	34623	RCSK18097	PLATE,MOUNTING.....	2
* 28	PAOZZ	2510011883228	34623	5579485	GUARD,HOOD AND GRIL.....	1

END OF FIGURE

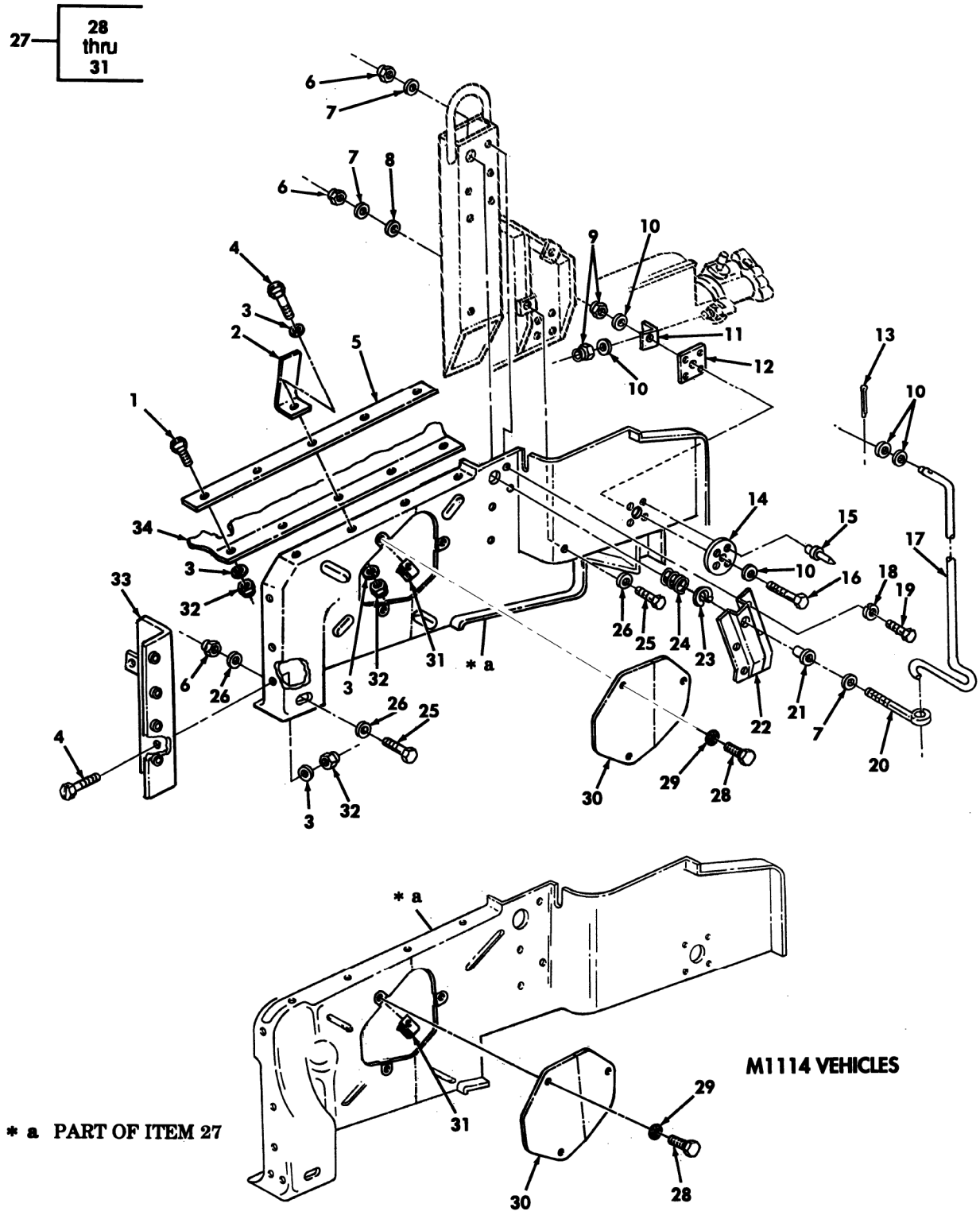

Figure 163. Left Hand Splash Shield, Radiator Side Armor, and Hood Prop Rod (Serial Number 299999 and Below).

(1) ITEM NO	(2) SMR CODE	(3) NSN	(4) CAGEC	(5) PART NUMBER	(6) DESCRIPTION AND USABLE ON CODES(UOC)	(7) QTY
					GROUP 1801 BODY,CAB,HOOD,AND HULL ASSEMBLY	
					FIG. 163 LEFT HAND SPLASH SHIELD, RADIATOR SIDE ARMOR,AND HOOD PROP ROD(SERIAL NUMBER 299999 AND BELOW)	
1	PAOZZ	5305004703321	96906	MS51849-74	SCREW,MACHINE #10-24 X 1/2.....	1
2	PAOZZ	5340014563913	34623	EX4659	BRACKET,ANGLE.....	4
3	PAOZZ	5310000145850	96906	MS27183-42	WASHER,FLAT #10.....	8
4	PAOZZ	5305002400194	96906	MS51849-76	SCREW,MACHINE #10-24 X 3/4.....	7
5	PAOZZ	5330014335054	34623	RCSK17531	RETAINER,SEAL.....	1
6	PAOZZ	5310008140673	96906	MS51943-33	NUT,SELF-LOCKING,HE 5/16-18.....	3
7	PAOZZ	5310000814219	96906	MS27183-12	WASHER,FLAT 5/16.....	3
8	PAOZZ	5310014574009	24617	9421128	WASHER,FLAT 5/16.....	1
9	PAOZZ	5310009359021	96906	MS51943-35	NUT,SELF-LOCKING,HE 3/8-16.....	2
10	PAOZZ	5310000806004	96906	MS27183-14	WASHER,FLAT 3/8.....	5
11	PFOZZ	5340012203084	19207	12338629	BRACKET,ANGLE..... UOC:XBB	1
11	PFOZZ	5340014599424	34623	EC12460528B1	BRACKET,MOUNTING..... UOC:XAA	1
12	PAOZZ	5365012529214	34623	5591577-B	SPACER,PLATE.....	1
13	PAOZZ	5315008423044	14351	X601	PIN,COTTER 3/32 X 3/4.....	1
14	PAOZZ	5365012468281	19207	12338637	SUPPORT ASSEMBLY,B.....	1
15	PAOZZ	5320012645978	19207	12339355-2	RIVET,BLIND 3/16 DIA.,.214-.437 GRIP.....	4
16	PAOZZ	5305007252317	80204	B1821BH038C150N	SCREW,CAP,HEXAGON H 3/8-16 X 1.50..	1
17	PFOZZ	2510011856118	19207	12338915	ROD,HOOD,VEHICULAR.....	1
18	PAOZZ	5310005825965	96906	MS35338-44	WASHER,LOCK 1/4.....	6
19	PAOZZ	5305014614400	24617	172447	SCREW,TAPPING 1/4-20 X 1.00.....	6
20	PAOZZ	5306011867129	34623	5578418	BOLT,EYE.....	1
21	PAOZZ	3120011867715	19207	12338895	BUSHING,SLEEVE.....	2
22	PFOZZ	5340011867229	34623	5578414	STRAP,RETAINING.....	1
23	PAOZZ	5325002821830	96906	MS16624-1066	RING,RETAINING.....	1
24	PAOZZ	5360012559899	73821	C0850-081-2250-M	SPRING,HELICAL,COMP.....	1
25	PAOZZ	5306002258499	96906	MS90725-34	BOLT,MACHINE 5/16-18 X 1.00.....	2
26	PAOZZ	5310000877493	96906	MS27183-13	WASHER,FLAT 3/8.....	3
27	PAOZZ	2540014618220	19207	12460530-1	GUARD,SPLASH,VEHICU L.H..... UOC:XBB	1
* 27	PAOZZ	2540014750629	34623	12446953-1	GUARD,SPLASH,VEHICU L.H..... UOC:TTA,TTT,TT1,UUA,UUU,UU1,UU2,XXA	1
28	PAOZZ	5305001159934	96906	MS51849-55	.SCREW,MACHINE #8-32 X 5/8.....	3
29	PAOZZ	5310012134192	7X677	9423534	.WASHER,FLAT #8.....	3
30	PAOZZ	5340014570459	19207	12446770	.COVER,ACCESS.....	1
* 31	PAOZZ	5301015131935	24617	1494255	.RETAINER,ASSEMBLED #8-32.....	3
32	PAOZZ	5310002081918	24617	190254	NUT,SELF-LOCKING,HE #10-24.....	6
33	PAOZZ	5340014342834	34623	RCSK17572	BRACKET,MOUNTING L.H.....	1
34	PFOZZ	5330014568882	34623	RCSK18424	SEAL,NONMETALLIC SP.....	1

END OF FIGURE

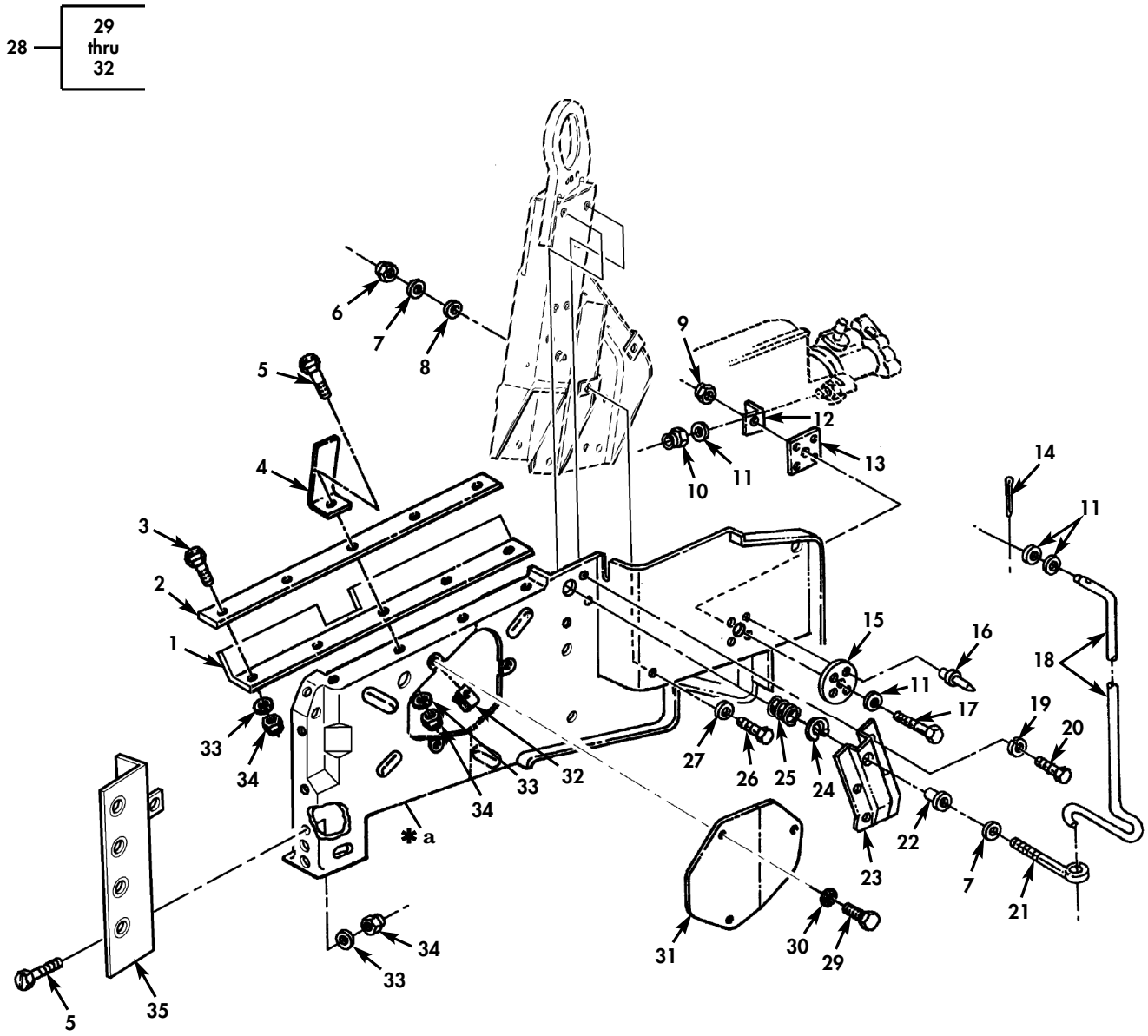

✱**a** PART OF ITEM 28

Figure 163A. Left Hand Splash Shield, Radiator Side Armor, and Hood Prop Rod (Serial Number 300000 and Above).

(1) ITEM NO	(2) SMR CODE	(3) NSN	(4) CAGEC	(5) PART NUMBER	(6) DESCRIPTION AND USABLE ON CODES(UOC)	(7) QTY
					GROUP 1801 BODY,CAB, HOOD,AND HULL ASSSEMBLIES	
					FIG. 163A LEFT HAND SPLASH SHIELD, RADIATOR SIDE ARMOR,AND HOOD PROP ROD(SERIAL NUMBER 300000 AND ABOVE)	
* 1	PAOZZ	5330014568882	34623	12469025	SEAL,NONMETALLIC SP..... UOC:TTA,TTT,TT1,UUA,UUU,UU1,UU2	1
* 2	PFOZZ	5330014335054	34623	12460527	PLATE,MOUNTING..... UOC:TTA,TTT,TT1,UUA,UUU,UU1,UU2	1
* 3	PAOZZ	5305012139852	72582	440502	SCREW,MACHINE..... UOC:TTA,TTT,TT1,UUA,UUU,UU1,UU2	1
* 4	PAOZZ	5340014563913	34623	EC12460529B1	BRACKET,ANGLE..... UOC:TTA,TTT,TT1,UUA,UUU,UU1,UU2	4
* 5	PAOZZ	5305002400194	96906	MS51849-76	SCREW,MACHINE 10-24 X 3/4..... UOC:TTA,TTT,TT1,UUA,UUU,UU1,UU2	7
* 6	PAOZZ	5310008140673	81349	M45913/3-5CG8C	NUT,SELF-LOCKING,HE 5/16-18..... UOC:TTA,TTT,TT1,UUA,UUU,UU1,UU2	1
* 7	PAOZZ	5310000814219	96906	MS27183-12	WASHER,FLAT 5/16..... UOC:TTA,TTT,TT1,UUA,UUU,UU1,UU2	2
* 8	PAOZZ	5310014574009	24617	9421128	WASHER,FLAT 5/16..... UOC:TTA,TTT,TT1,UUA,UUU,UU1,UU2	1
* 9	PAOZZ	5310009308214	96906	MS51988-7	NUT,SELF-LOCKING,EX 3/8-16..... UOC:TTA,TTT,TT1,UUA,UUU,UU1,UU2	1
* 10	PAOZZ	5310009359021	96906	MS51943-35	NUT,SELF-LOCKING,HE 3/8-16..... UOC:TTA,TTT,TT1,UUA,UUU,UU1,UU2	1
* 11	PAOZZ	5310000806004	96906	MS27183-14	WASHER,FLAT 3/8..... UOC:TTA,TTT,TT1,UUA,UUU,UU1,UU2	4
* 12	PFOZZ	5340014599424	34623	EC12460528B1	BRACKET,MOUNTING..... UOC:TTA,TTT,TT1,UUA,UUU,UU1,UU2	1
* 13	PAOZZ	5365012529214	34623	5591577-B	SPACER,PLATE..... UOC:TTA,TTT,TT1,UUA,UUU,UU1,UU2	1
* 14	PAOZZ	5315008423044	80205	MS24665-283	PIN,COTTER 3/32 X 3/4..... UOC:TTA,TTT,TT1,UUA,UUU,UU1,UU2	1
* 15	PAOZZ	5365012468281	19207	12338637	SUPPORT ASSEMBLY,B..... UOC:TTA,TTT,TT1,UUA,UUU,UU1,UU2	1
* 16	PAOZZ	5320012645978	19207	12339355-2	RIVET,BLIND 3/16 DIA.,.214-.437 GRIP UOC:TTA,TTT,TT1,UUA,UUU,UU1,UU2	4
* 17	PAOZZ	5305007252317	80204	B1821BH038C150N	SCREW,CAP,HEXAGON H 3/8-16 X 1.50.. UOC:TTA,TTT,TT1,UUA,UUU,UU1,UU2	1
* 18	PFOZZ	2510011856118	19207	12338915	ROD,HOOD,VEHICULAR..... UOC:TTA,TTT,TT1,UUA,UUU,UU1,UU2	1
* 19	PAOZZ	5310005825965	80205	MS35338-44	WASHER,LOCK 1/4..... UOC:TTA,TTT,TT1,UUA,UUU,UU1,UU2	4
* 20	PAOZZ	5305014614400	3M915	172447	SCREW,TAPPING 1/4-20 X 1.00..... UOC:TTA,TTT,TT1,UUA,UUU,UU1,UU2	4
* 21	PAOZZ	5306011867129	19207	12339435	BOLT,EYE..... UOC:TTA,TTT,TT1,UUA,UUU,UU1,UU2	1
* 22	PAOZZ	3120011867715	19207	12338895	BUSHING,SLEEVE..... UOC:TTA,TTT,TT1,UUA,UUU,UU1,UU2	1
* 23	PFOZZ	5340011867229	19207	12338913	STRAP,RETAINING..... UOC:TTA,TTT,TT1,UUA,UUU,UU1,UU2	1

(1) ITEM NO	(2) SMR CODE	(3) NSN	(4) CAGEC	(5) PART NUMBER	(6) DESCRIPTION AND USABLE ON CODES(UOC)	(7) QTY
* 24	PAOZZ	5325002821830	96906	MS16624-1066	RING,RETAINING..... UOC:TTA,TTT,TT1,UUA,UUU,UU1,UU2	1
* 25	PAOZZ	5360012559899	73821	C0850-081-2250-M	SPRING,HELICAL,COMP..... UOC:TTA,TTT,TT1,UUA,UUU,UU1,UU2	1
* 26	PAOZZ	5306002258499	80205	MS90725-34	BOLT,MACHINE 5/16-18 X 1.00..... UOC:TTA,TTT,TT1,UUA,UUU,UU1,UU2	1
* 27	PAOZZ	5310011191024	24617	2436162	WASHER,FLAT 5/16..... UOC:TTA,TTT,TT1,UUA,UUU,UU1,UU2	1
* 28	PAOZZ	2540014750629	19207	12446953-4	GUARD,SPLASH,VEHICU..... UOC:TTA,TTT,TT1,UUA,UUU,UU1,UU2	1
* 29	PAOZZ	5305001159934	96906	MS51849-55	.SCREW,MACHINE 8-32 X 5/8..... UOC:TTA,TTT,TT1,UUA,UUU,UU1,UU2	3
* 30	PAOZZ	5310012134192	7X677	9423534	.WASHER,FLAT 8..... UOC:TTA,TTT,TT1,UUA,UUU,UU1,UU2	3
* 31	PAOZZ	5340014570459	19207	12446770	.COVER,ACCESS..... UOC:TTA,TTT,TT1,UUA,UUU,UU1,UU2	1
* 32	PAOZZ	5310015131935	34623	1494255	.NUT,SHEET SPRING 8-32..... UOC:TTA,TTT,TT1,UUA,UUU,UU1,UU2	3
* 33	PAOZZ	5310000145850	96906	MS27183-42	WASHER,FLAT 10..... UOC:TTA,TTT,TT1,UUA,UUU,UU1,UU2	8
* 34	PAOZZ	5310012699245	7X677	190254	NUT,SELF-LOCKING,HE 10-24..... UOC:TTA,TTT,TT1,UUA,UUU,UU1,UU2	8
* 35	PAOZZ	5340014342834	19207	12469026	BRACKET,MOUNTING..... UOC:TTA,TTT,TT1,UUA,UUU,UU1,UU2	1

END OF FIGURE

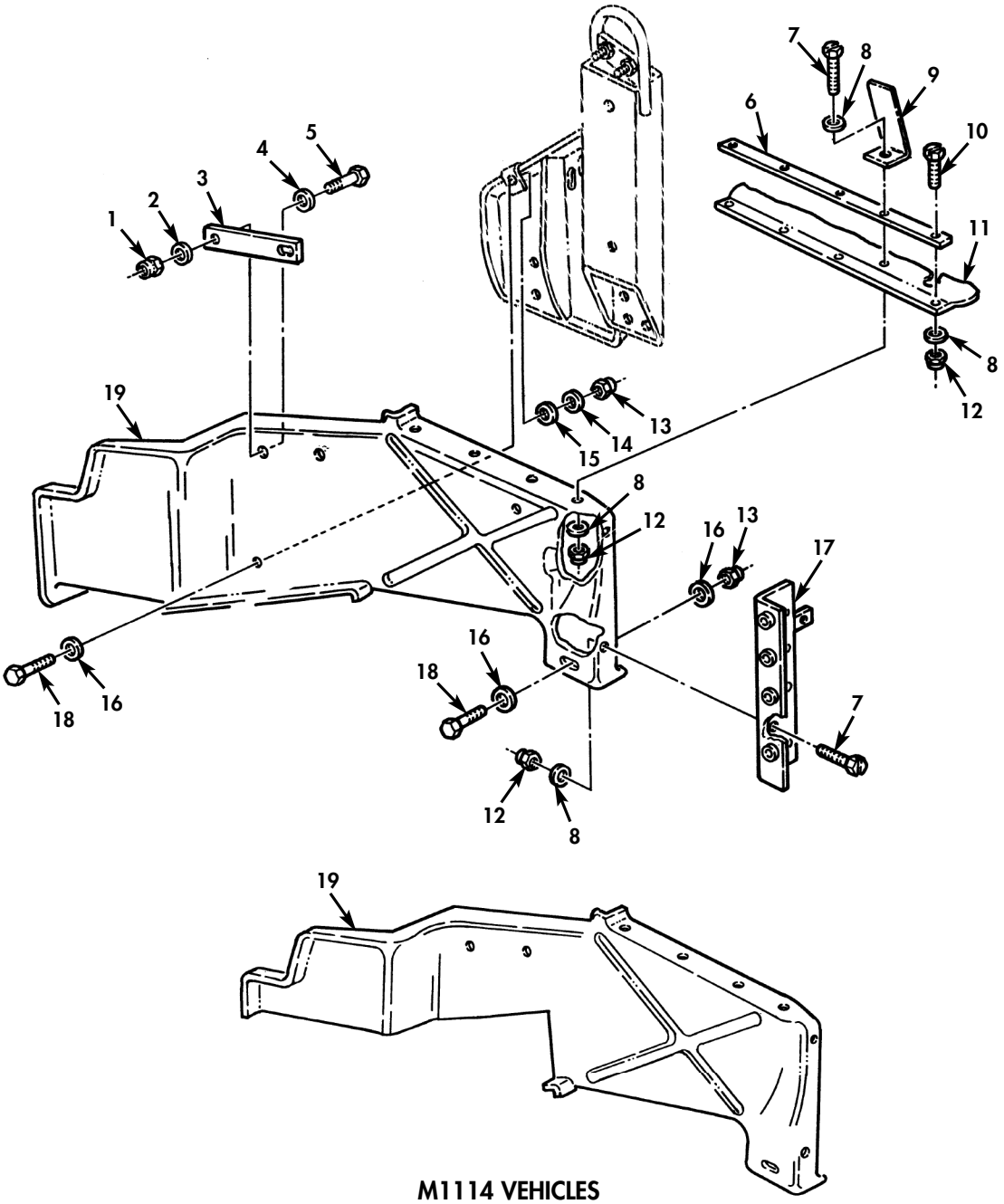

Figure 164. Right Hand Splash Shield (Serial Number 246889 and Below).

(1) ITEM NO	(2) SMR CODE	(3) NSN	(4) CAGEC	(5) PART NUMBER	(6) DESCRIPTION AND USABLE ON CODES(UOC)	(7) QTY
					GROUP 1801 BODY,CAB,HOOD,AND HULL ASSEMBLY	
					FIG. 164 RIGHT HAND SPLASH SHIELD (SERIAL NUMBER 246889 AND BELOW)	
1	PAOZZ	5310000614650	96906	MS51943-31	NUT,SELF-LOCKING,HE 1/4-20.....	1
2	PAOZZ	5310008094058	96906	MS27183-10	WASHER,FLAT 0.281.....	1
3	PAOZZ	5365012101584	19207	12338635	SPACER,SLEEVE.....	1
4	PAOZZ	5310008093078	96906	MS27183-11	WASHER,FLAT 1/4.....	1
5	PAOZZ	5305000680502	96906	MS90725-6	SCREW,CAP,HEXAGON H 1/4-20 X 3/4...	1
6	PAOZZ	5330014335054	34623	RCSK17531	RETAINER,SEAL.....	1
7	PAOZZ	5305002400194	96906	MS51849-76	SCREW,MACHINE #10-24 X 3/4.....	7
8	PAOZZ	5310000145850	96906	MS27183-42	WASHER,FLAT #10.....	8
9	PAOZZ	5340014563913	34623	EX4659	SUPPORT.....	4
10	PAOZZ	5305004703321	96906	MS51849-74	SCREW,MACHINE #10-24 X 1/2.....	1
11	PFOZZ	5330014568882	34623	RCSK18424	SEAL,NONMETALLIC SP.....	1
12	PAOZZ	5310002081918	88044	AN365-1024A	NUT,SELF-LOCKING,HE #10-24.....	8
13	PAOZZ	5310008140673	96906	MS51943-33	NUT,SELF-LOCKING,HE 5/16-18.....	2
14	PAOZZ	5310000814219	96906	MS27183-12	WASHER,FLAT 5/16.....	1
15	PAOZZ	5310014574009	24617	9421128	WASHER,FLAT 3/8.....	1
16	PAOZZ	5310000877493	96906	MS27183-13	WASHER,FLAT 3/8..... UOC:XAA	1
16	PAOZZ	5310000877493	96906	MS27183-13	WASHER,FLAT 3/8..... UOC:XBB	2
17	PAOZZ	5340014324879	34623	12469027	BRACKET,MOUNTING R.H.....	1
18	PAOZZ	5306002258499	96906	MS90725-34	BOLT,MACHINE 5/16-18 X 1.00.....	2
19	PAOZZ	2540011747696	19207	12340360	GUARD,SPLASH,VEHICU R.H..... UOC:XAA	1
19	PAOZZ	2540014611460	19207	12460531-1	GUARD,SPLASH,VEHICU R.H..... UOC:XBB	1

END OF FIGURE

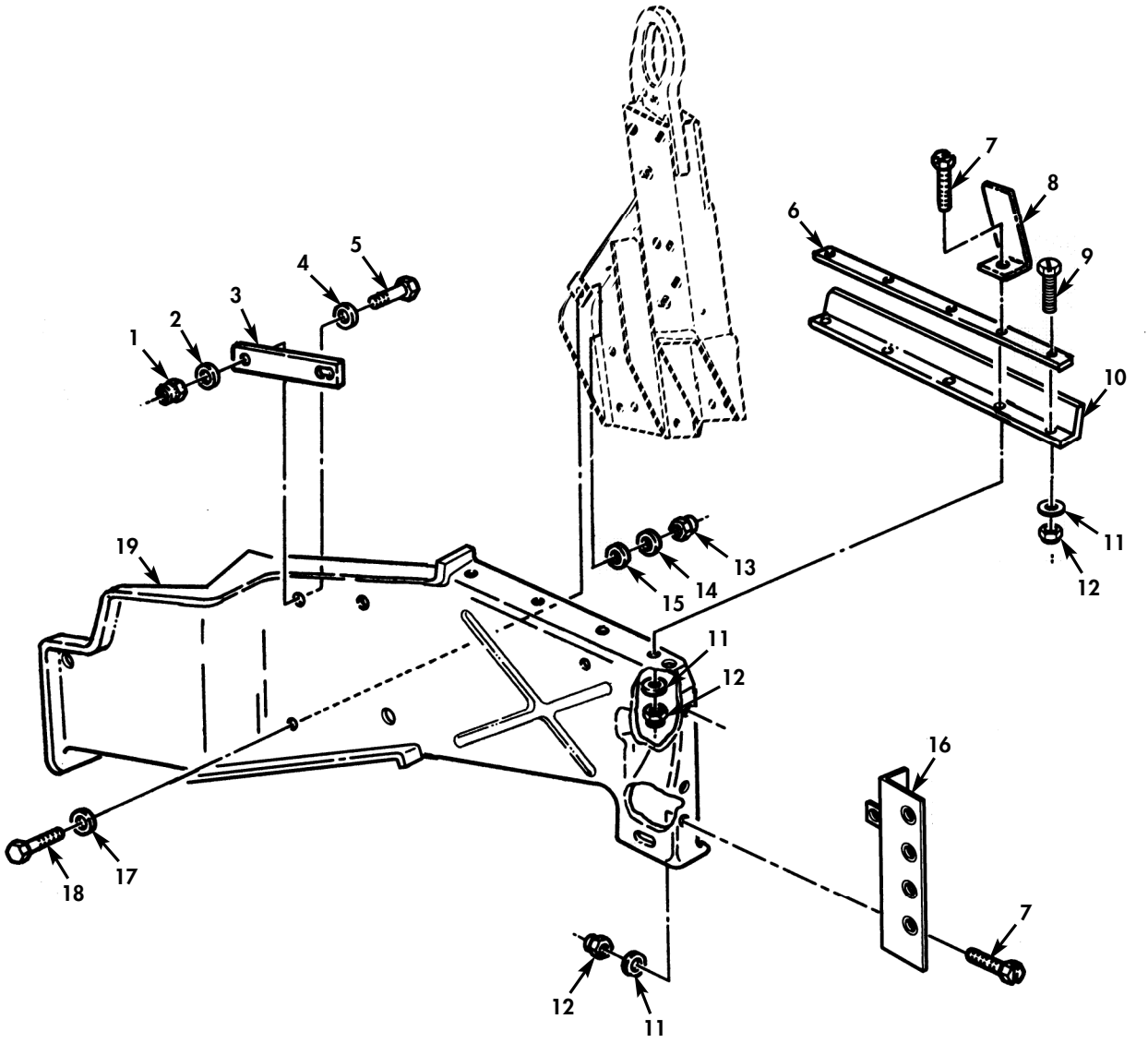

Figure 164A. Right Hand Splash Shield (Serial Number 246890 and Above).

(1) ITEM NO	(2) SMR CODE	(3) NSN	(4) CAGEC	(5) PART NUMBER	(6) DESCRIPTION AND USABLE ON CODES(UOC)	(7) QTY
					GROUP 1801 BODY,CAB,HOOD,AND HULL ASSEMBLY	
					FIG. 164A RIGHT HAND SPLASH SHIELD (SERIAL NUMBER 246890 AND ABOVE)	
* 1	PAOZZ	5310000614650	80205	M45913/3-4CG8C	NUT,SELF-LOCKING,HE 1/4-20..... UOC:TTA,TTT,TT1,UUA,UUU,UU1,UU2	1
* 2	PAOZZ	5310008094058	96906	MS27183-10	WASHER,FLAT 1/4..... UOC:TTA,TTT,TT1,UUA,UUU,UU1,UU2	1
* 3	PAOZZ	5365012101584	19207	12338635	SPACER,PLATE..... UOC:TTA,TTT,TT1,UUA,UUU,UU1,UU2	1
* 4	PAOZZ	5310008093078	96906	MS27183-11	WASHER,FLAT 1/4..... UOC:TTA,TTT,TT1,UUA,UUU,UU1,UU2	1
* 5	PAOZZ	5305000680508	80204	B1821BH025C075N	SCREW,CAP,HEXAGON H 1/4-20 X 3/4... UOC:TTA,TTT,TT1,UUA,UUU,UU1,UU2	1
* 6	PFOZZ	5330014335054	34623	12460527	PLATE,MOUNTING..... UOC:TTA,TTT,TT1,UUA,UUU,UU1,UU2	1
* 7	PAOZZ	5305002400194	96906	MS51849-76	SCREW,MACHINE 10-24 X 3/4..... UOC:TTA,TTT,TT1,UUA,UUU,UU1,UU2	7
* 8	PAOZZ	5340014563913	34623	EC12460529B1	BRACKET,ANGLE..... UOC:TTA,TTT,TT1,UUA,UUU,UU1,UU2	4
* 9	PAOZZ	5305012139852	72582	440502	SCREW,MACHINE..... UOC:TTA,TTT,TT1,UUA,UUU,UU1,UU2	1
* 10	PAOZZ	5330014568882	34623	12469025	SEAL,NONMETALLIC SP..... UOC:TTA,TTT,TT1,UUA,UUU,UU1,UU2	1
* 11	PAOZZ	5310000145850	96906	MS27183-42	WASHER,FLAT 10..... UOC:TTA,TTT,TT1,UUA,UUU,UU1,UU2	8
* 12	PAOZZ	5310012699245	7X677	190254	NUT,SELF-LOCKING,HE 10-24..... UOC:TTA,TTT,TT1,UUA,UUU,UU1,UU2	8
* 13	PAOZZ	5310008140673	81349	M45913/3-5CG8C	NUT,SELF-LOCKING,HE 5/16-18..... UOC:TTA,TTT,TT1,UUA,UUU,UU1,UU2	1
* 14	PAOZZ	5310011191024	24617	2436162	WASHER,FLAT 5/16..... UOC:TTA,TTT,TT1,UUA,UUU,UU1,UU2	1
* 15	PAOZZ	5310014574009	24617	9421128	WASHER,FLAT 5/16..... UOC:TTA,TTT,TT1,UUA,UUU,UU1,UU2	1
* 16	PAOZZ	5340014324879	34623	12469027	BRACKET,MOUNTING..... UOC:TTA,TTT,TT1,UUA,UUU,UU1,UU2	1
* 17	PAOZZ	5310000446363	24617	446363	WASHER,FLAT 5/16..... UOC:TTA,TTT,TT1,UUA,UUU,UU1,UU2	1
* 18	PAOZZ	5306002264827	80204	B1821BH031C100N	BOLT,MACHINE 5/16-18 X 1.00..... UOC:TTA,TTT,TT1,UUA,UUU,UU1,UU2	1
* 19	PAOZZ	2540015204910	19207	12460531-2	GUARD,SPLASH,VEHICL..... UOC:TTA,TTT,TT1,UUA,UUU,UU1,UU2	1

END OF FIGURE

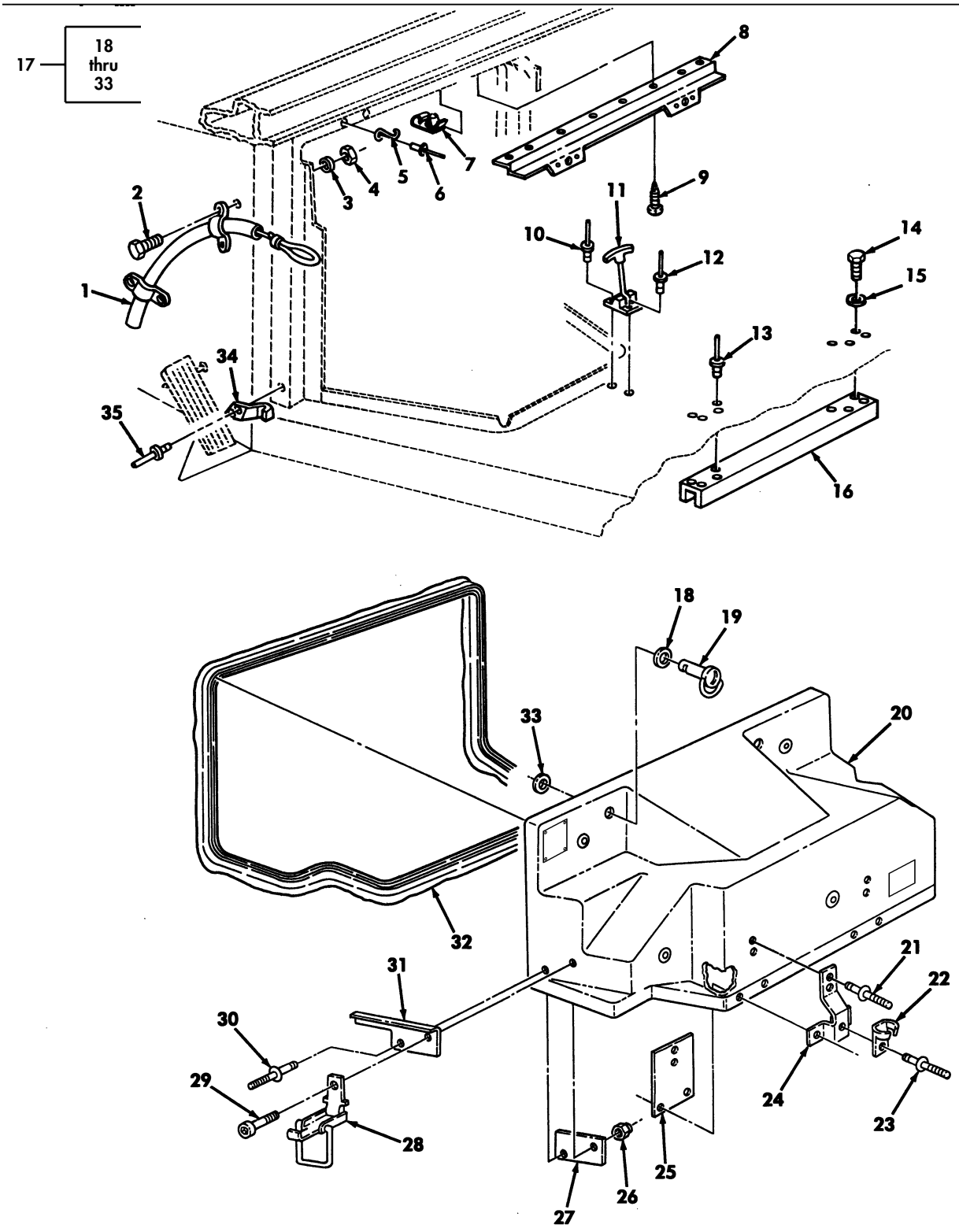

Figure 165. Engine Access Cover Assembly, A-Pillar Insulation, and Steering Wheel Lock.

(1) ITEM NO	(2) SMR CODE	(3) NSN	(4) CAGEC	(5) PART NUMBER	(6) DESCRIPTION AND USABLE ON CODES(UOC)	(7) QTY
					GROUP 1801 BODY,CAB,HOOD,AND HULL ASSEMBLY	
					FIG. 165 ENGINE ACCESS COVER ASSEMBLY,A-PILLAR INSULATION,AND STEERING WHEEL LOCK	
1	PFOZZ	2530011964724	19207	12340252	LOCK ASSEMBLY,STEER.....	1
2	PAOZZ	5305000680508	80204	B1821BH025C075N	SCREW,CAP,HEXAGON H 1/4-20 X 3/4...	4
3	PAOZZ	5310012545352	34623	5593308	WASHER,FLAT 1/4.....	4
4	PAOZZ	5310010666759	72962	21NE-040	NUT,SELF-LOCKING,HE 1/4-20.....	4
5	PAOZZ	5325004493001	72794	S7-250	LOCKSPRING,TURNLOCK.....	2
* 6	PAOZZ	5320000835009	05693	BSP-43	RIVET,BLIND 1/8 DIA., 136-187 GRIP.	4
7	PAOZZ	5310011947066	72800	C7685-10A	NUT,SHEET SPRING.....	8
8	PAOZZ	5340013327515	19207	12338853	BRACKET,MOUNTING.....	1
9	PAOZZ	5305004324205	96906	MS51861-49	SCREW,TAPPING 190-16 X 1.00.....	8
* 10	PAOZZ	5320011435079	80205	NAS9301BNS-4-04	RIVET,BLIND 1/8 DIA.,.188-.250 GRIP	2
11	PAOZZ	5340004922313	94222	37-10-071-10	CATCH,CLAMPING.....	2
12	PAOZZ	5320012582576	11815	CR-213-4-2	RIVET,BLIND 1/8 DIS.,.063-1.25 GRIP	4
13	PAOZZ	5320011435075	11815	CR3213-6-2	RIVET,BLIND 3/16.....	2
14	PAOZZ	5305000680502	96906	MS90725-6	SCREW,CAP,HEXAGON H 1/4-20 X 3/4...	4
15	PAOZZ	5310012510748	34623	5593691	WASHER,FLAT 1/4.....	4
16	PFOZZ	2540012028547	19207	12340638	BRACE,RADIO RACK.....	1
17	PAOZZ	2510014346103	34623	RCSK17349	HOOD,ENGINE COMPART.....	1
18	PAOZZ	5310008094085	96906	MS27183-16	.WASHER,FLAT 7/16.....	2
19	PAOZZ	5325011917555	72794	BJR7-100CBC	.STUD,TURNLOCK FASTE.....	2
20	XAOZZ		34623	RCSK17960	.COVER,ENGINE.....	1
21	PAOZZ	5320011361782	80205	NAS9301BNS-6-04	.RIVET,BLIND 3/16 X .250.....	8
22	PAOZZ	5340004922313	94222	37-10-071-10	.CLIP,RETAINING.....	2
23	PAOZZ	5320011511061	80205	NAS9301BNS-4-02	.RIVET.....	4
24	PFOZA	5340014348111	34623	RCSK17413	.BRACKET,MOUNTING.....	2
25	PFOZA	5340014348113	34623	RCSK17639	.PLATE,MOUNTING.....	4
26	PAOZZ	5310008140673	96906	MS51943-33	.NUT,SELF-LOCKING,HE 5/16-18.....	4
* 27	PFOZZ	5365012528026	34623	5585143-B	.SPACER,PLATE.....	2
28	PAOZZ	2540012102787	19207	12338950	.LATCH,HOOD,VEHICULA.....	2
29	PAOZZ	5305012111470	19207	12339428	.SCREW,SHOULDER 5/16-18 X 1.00.....	2
30	PAOZZ	5320011361785	80205	NAS9302BNS-6-04	.RIVET,BLIND.....	2
31	PFOZZ	5342012493502	34623	12338952-1	.BRACKET,ENGINE ACCE L.H.....	1
* 31	PFOZZ	5342012495389	34623	EC12338952-2	.BRACKET,ENGINE ACCE R.H.....	1
32	PAOZZ	4320014342835	34623	RCSK17796	.SEAL ASSEMBLY,SHAFT.....	1
33	PAOZZ	5325012668414	72794	GH7	.EYELET,TURNLOCK FAS.....	2
34	PFOZZ	2540012477914	19207	12338945-2	STRIKE,ENGINE COVER R.H.....	1
34	PFOZZ	2540012477915	19207	12338945-1	STRIKE,ENGINE COVER L.H.....	1
* 35	PAOZZ	5320010338638	80205	NAS9301BNS-6-03	RIVET,BLIND 3/16 DIA.,OVERSIZE, .126-.187 GRIP.....	4

END OF FIGURE

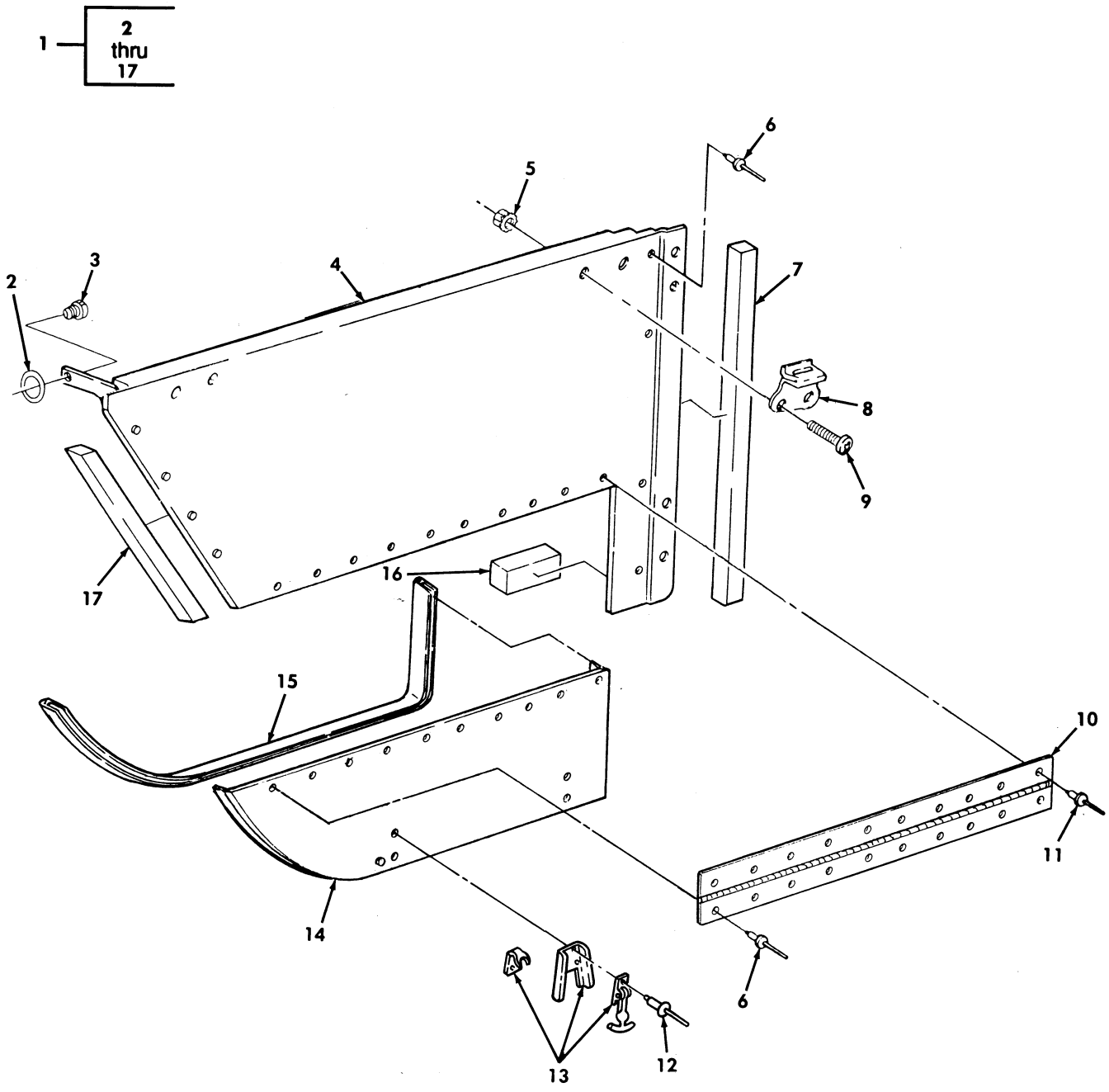

Figure 166. Rear Fixed Doors, Access Door Panel, and Mounting Hardware.

(1) ITEM NO	(2) SMR CODE	(3) NSN	(4) CAGEC	(5) PART NUMBER	(6) DESCRIPTION AND USABLE ON CODES(UOC)	(7) QTY
					GROUP 1801 BODY,CAB,HOOD,AND HULL ASSEMBLY	
					FIG. 166 REAR FIXED DOORS,ACCESS DOOR PANEL,AND MOUNTING HARDWARE	
* 1	PAOOO	2510014646652	19207	12469177	DOOR,VEHICULAR L.H..... UOC:XAA	1
* 1	PAOOO	2510014646660	19207	12469178	DOOR,VEHICULAR R.H..... UOC:XAA	1
2	PAOZZ	5325012668414	72794	GH7	.EYELET,TURNLOCK FAS..... UOC:XAA	1
* 3	PAOZZ	5325012641522	72794	121J-740-C3C	.STUD,TURNLOCK FASTE..... UOC:XAA	1
4	XAOZZ		34623	RCSK18034-1	.PANEL L.H..... UOC:XAA	1
4	XAOZZ		34623	RCSK18034-2	.PANEL R.H..... UOC:XAA	1
5	PAOZZ	5310001249265	72582	271169	.NUT,PLAIN,ASSEMBLED #10-32..... UOC:XAA	4
6	PAOZZ	5320011435075	80205	NAS9301BNS-6-02	.RIVET,BLIND..... UOC:XAA	14
* 7	PAOZZ	5330015193178	19207	12339419-2	.SEAL,NONMETALLIC SP..... UOC:XAA	2
8	PAOZZ	5340012609027	34623	5593625	.LOOP,STRAP FASTENER..... UOC:XAA	2
* 9	PAOZZ	5305009897435	80205	MS35207-264	.SCREW,MACHINE #10-32 X 5/8..... UOC:XAA	4
10	PAOZZ	2510014611397	34623	RCSK18038	.HINGE,DOOR,VEHICULA..... UOC:XAA	1
11	PAOZZ	5320011361782	80205	NAS9301BNS-6-04	.RIVET,BLIND..... UOC:XAA	20
12	PAOZZ	5320000835009	81349	M24243/1A403	.RIVET,BLIND..... UOC:XAA	8
13	PAOZZ	5340012716461	27182	F355RBXXBZXX	.CATCH,CLAMPING..... UOC:XAA	2
14	XAOZZ		34623	RCSK18036-1	.PANEL L.H..... UOC:XAA	1
14	XAOZZ		34623	RCSK18036-2	.PANEL R.H..... UOC:XAA	1
15	PAOZZ	5330014608997	34623	RCSK18047	.SEAL,NONMETALLIC SP..... UOC:XAA	1
16	PAOZA	5330014611428	34623	RCSK18037-3	.SEAL,NONMETALLIC ST..... UOC:XAA	1
17	PAOZA	5330014609004	34623	RCSK18037-2	.SEAL,NONMETALLIC ST..... UOC:XAA	1

END OF FIGURE

UNIT, DIRECT SUPPORT, AND GENERAL SUPPORT MAINTENANCE
REPAIR PARTS AND SPECIAL TOOLS LIST

TRUCK, UTILITY: S250 SHELTER CARRIER, 4X4, M1113 (2320-01-412-0143),
TRUCK, UTILITY: UP-ARMORED CARRIER, 4X4, M1114 (2320-01-413-3739),
TRUCK, UTILITY: EXPANDED CAPACITY, ARMAMENT CARRIER, 4X4, M1151 (2320-01-518-7330),
TRUCK, UTILITY: EXPANDED CAPACITY, ENHANCED, 4X4, M1152 (2320-01-518-7332)

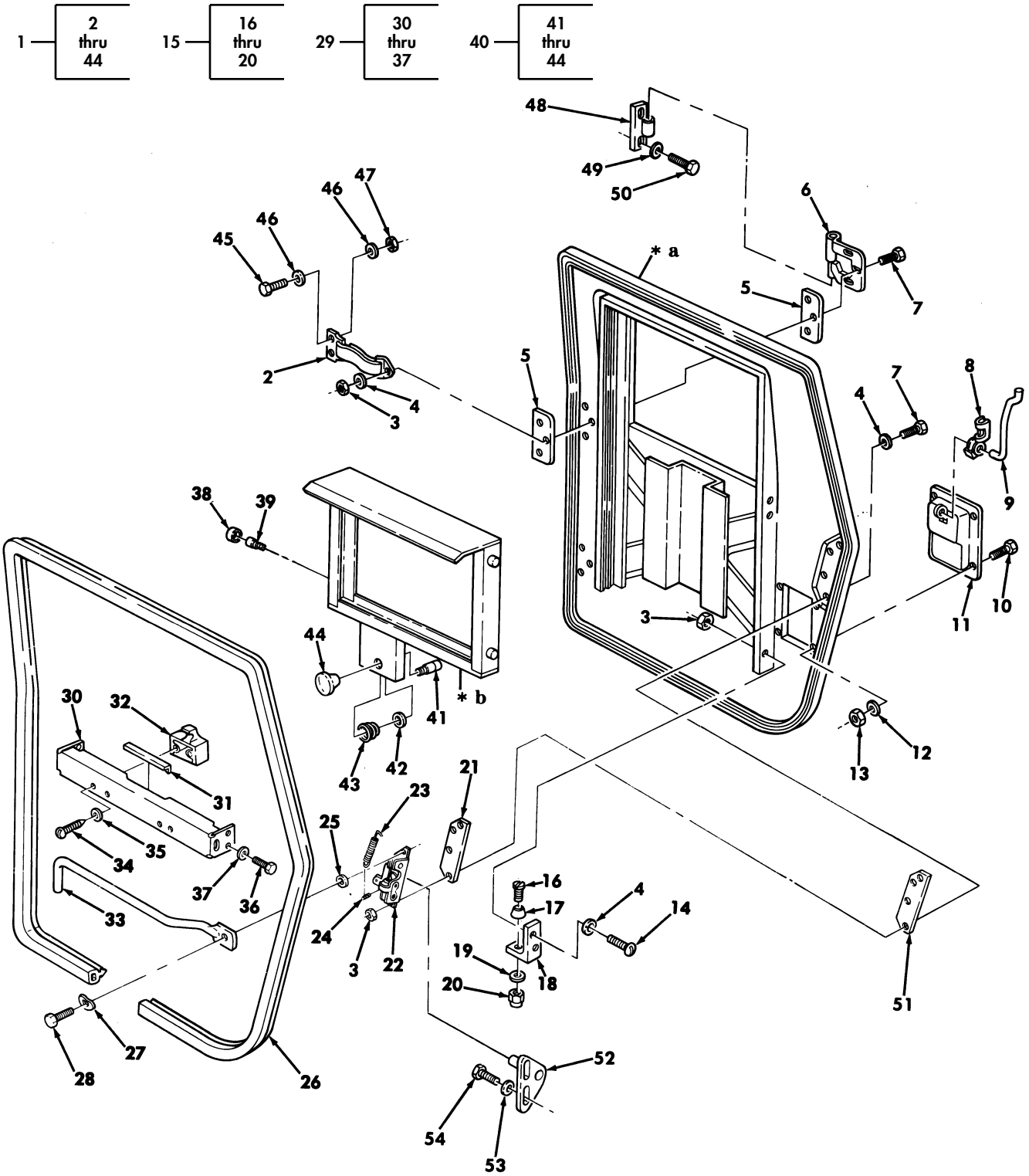

✱ **a** PART OF ITEM 1
✱ **b** PART OF ITEM 40

Figure 166A. Crew Door Assembly, Rear, Ballistic.

(1) ITEM NO	(2) SMR CODE	(3) NSN	(4) CAGEC	(5) PART NUMBER	(6) DESCRIPTION AND USABLE ON CODES(UOC)	(7) QTY
					GROUP 1801 BODY,CAB,HOOD AND HULL ASSEMBLY	
					FIG. 166A CREW DOOR ASSEMBLY,REAR BALLISTIC	
* 1	PAOFF	2510012541501	19207	12339473-1	DOOR,VEHICULAR BASIC ARMOR,L.H..... UOC:TTT	1
* 1	PAOFF	2510012573904	19207	12339473-2	DOOR,VEHICULAR BASIC ARMOR,R.H..... UOC:TTT	1
* 2	PAOZZ	5340012538971	31272	45262-10	.STRAP,WEBBING UPPER HINGE,L.H..... UOC:TTT	1
* 2	PAOZZ	5340012559918	31272	45262-11	.STRAP,WEBBING UPPER HINGE,R.H..... UOC:TTT	1
* 3	PAOZZ	5310012544284	19207	12339730	.NUT,SELF-LOCKING 1/4-20..... UOC:TTT	14
* 4	PAOZZ	5310014768589	24617	9414920	.WASHER,FLAT 1/4..... UOC:TTT	20
* 5	PFOZZ	5365012014749	34623	5584436	.SPACER,PLATE INNER AND OUTER..... UOC:TTT	4
* 6	PFOZZ	5340012042458	34623	5584325	.LEAF,BUTT HINGE LOWER,L.H..... UOC:TTT	1
* 6	PFOZZ	5340011993498	19207	12339448-1	.HINGE,ACCESS DOOR UPPER,L.H..... UOC:TTT	1
* 6	PFOZZ	5340011978675	34623	5584867	.LEAF,BUTT HINGE UPPER,R.H..... UOC:TTT	1
* 6	PFOZZ	5340012019076	34623	12339448-4	.LEAF,BUTT HINGE LOWER,R.H..... UOC:TTT	1
* 7	PAOZZ	5305004826825	96906	MS35206-345	.SCREW,MACHINE 1/4-20 X 1.38..... UOC:TTT	10
* 8	PAOZZ	5340011982240	19207	12339731	.CLIP-CLEVIS,ROD L.H..... UOC:TTT	1
* 8	PAOZZ	5340011982241	34623	5584302	.CLIP-CLEVIS,ROD R.H..... UOC:TTT	1
* 9	PFOZZ	2540012012356	19207	12339377-1	.HOOK,REAR LATCH L.H..... UOC:TTT	1
* 9	PFOZZ	2540012012357	19207	12339377-2	.HOOK,REAR LATCH R.H..... UOC:TTT	1
* 10	PAOZZ	5305009846196	80205	MS35206-248	.SCREW,MACHINE #8-32 X 7/8..... UOC:TTT	4
* 11	PAOZZ	5340012094870	19220	249	.HANDLE,RECESS..... UOC:TTT	1
* 12	PAOZZ	5310012538952	34623	5593241	.WASHER,FLAT #8..... UOC:TTT	8
* 13	PAOZZ	5310011983487	19207	12339728-3	.NUT,SELF-LOCKING #8-32..... UOC:TTT	4
* 14	PAOZZ	5305009881725	80205	NASM35206-281	.SCREW,MACHINE 1/4-20 X 3/4..... UOC:TTT	4
* 15	PAOOO	2510011965316	19207	12339416-1	.STOP ASSEMBLY,WIND L.H..... UOC:TTT	2
* 15	PAOOO	5342011958039	19207	12339416-2	.STOP ASSEMBLY,WIND R.H..... UOC:TTT	2
* 16	PAOZZ	5305009846214	80205	MS35206-267	..SCREW,MACHINE #10-24 X 1.00.....	1

(1) ITEM NO	(2) SMR CODE	(3) NSN	(4) CAGEC	(5) PART NUMBER	(6) DESCRIPTION AND USABLE ON CODES(UOC)	(7) QTY
					UOC:TTT	
* 17	PAOZZ	5340012038675	34623	5579257	..BUMPER,NONMETALLIC.....	1
					UOC:TTT	
* 18	PFOZZ	5340012030324	19207	12339404-1	..BRACKET,ANGLE L.H.....	1
					UOC:TTT	
* 18	PFOZZ	5340011959107	19207	12339404-2	..BRACKET,ANGLE R.H.....	1
					UOC:TTT	
* 19	PAOZZ	5310012538953	34623	5593242	..WASHER,FLAT #10.....	1
					UOC:TTT	
* 20	PAOZZ	5310012033217	19207	12339728-2	..NUT,SELF-LOCKING #10-24.....	1
					UOC:TTT	
* 21	PFOZZ	5365011979383	34623	5584299	.SPACER,PLATE.....	1
					UOC:TTT	
* 22	PFOZZ	2540011974900	19220	9-300-U-L	.LATCH,DOOR,VEHICU R.H.....	1
					UOC:TTT	
* 22	PFOZZ	2540011965317	19220	9-300-U-R	.LATCH,DOOR,VEHICU L.H.....	1
					UOC:TTT	
* 23	PAOZZ	5360012829316	19220	2-300-P5	.SPRING,HELICAL EXTE.....	1
					UOC:TTT	
* 24	PAOZZ	5315013003012	19220	565698-4	.PIN,STRAIGHT,HEADED.....	1
					UOC:TTT	
* 25	PAOZZ	5310000806004	96906	MS27183-14	.WASHER,FLAT 3/8.....	1
					UOC:TTT	
* 26	PAOZZ	5330011967969	19207	12339462	.SEAL,NONMETALLIC SP.....	1
					UOC:TTT	
* 27	PAOZZ	5310011983428	19207	12340257-1	.WASHER,SPRING TENSI 3/8.....	1
					UOC:TTT	
* 28	PAOZZ	5306012042139	34623	5589067	.BOLT,SELF-LOCKING 1/4-20 X 1/2....	1
					UOC:TTT	
* 29	PAOOO	5340011976714	34623	5584260	.BRACKET,LATCH ASS L.H.....	1
					UOC:TTT	
* 29	PAOOO	2540011987581	19207	12339387-2	.LATCH,DOOR,VEHICL R.H.....	1
					UOC:TTT	
* 30	XAOZZ		34623	5588063	..BRACKET,ASSEMBLY.....	1
					UOC:TTT	
* 31	MOOZZ		34623	5584707	..PROTECTOR,EDGE MAKE FROM PAD P/N 12339902-1,8.90 INCHES LONG.....	1
					UOC:TTT	
* 32	PFOZZ	2510011991499	19207	12339450	..GUIDE,DOOR LATCH.....	1
					UOC:TTT	
* 33	PFOZZ	3040011954173	34623	12339451-1	..LEVER,REMOTE CONT L.H.....	1
					UOC:TTT	
* 33	PFOZZ	3040011961493	34623	12339451-2	..LEVER,REMOTE CONT R.H.....	1
					UOC:TTT	
* 34	PAOZZ	5305004324205	80205	MS51861-49	..SCREW,TAPPING #10-16 X 1.00.....	2
					UOC:TTT	
* 35	PAOZZ	5310012538953	34623	5593242	..WASHER,FLAT #10.....	2
					UOC:TTT	
* 36	PAOZZ	5305009846193	80205	MS35206-245	..SCREW,MACHINE #10-16 X 1/2.....	4
					UOC:TTT	
* 37	PAOZZ	5310012538952	34623	5593241	..WASHER,FLAT #8.....	V
					UOC:TTT	
* 38	PAOZZ	5355012526504	19207	12339380	.KNOB.....	4

(1) ITEM NO	(2) SMR CODE	(3) NSN	(4) CAGEC	(5) PART NUMBER	(6) DESCRIPTION AND USABLE ON CODES(UOC)	(7) QTY
					UOC:TTT	
* 39	PAOZZ	5315012042328	19207	12339725	.PIN,SHOULDER HEAD.....	4
					UOC:TTT	
* 40	PAOOO	2510011899748	19207	12339374-2	.WINDOW ASSSEMBLY,V BALLISTIC,REAR DOOR,BASIC ARMOR,L.H.....	1
					UOC:TTT	
* 40	PAOOO	2510011887381	19207	12339374-1	.WINDOW ASSEMBLY,V BALLISTIC,REAR DOOR,BASIC ARMOR,R.H.....	1
					UOC:TTT	
* 41	PAOZZ	5315012038543	19207	12339726	..PIN,SHOULDER HEAD.....	1
					UOC:TTT	
* 42	PAOZZ	5325004425845	96906	MS16633-1050	..RING,RETAINING.....	1
					UOC:TTT	
* 43	PAOZZ	5360011983525	19207	12339369	..SPRING,HELICAL COMP.....	1
					UOC:TTT	
* 44	PAOZZ	5355012988571	80813	1-236-005	..KNOB.....	1
					UOC:TTT	
* 45	PAOZZ	5306002259089	80205	MS90726-34	BOLT,MACHINE 5/16-24 X 1.00.....	4
					UOC:TTT	
* 46	PAOZZ	5310000814219	96906	MS27183-12	WASHER,FLAT 5/16.....	8
					UOT:TT	
* 47	PAOZZ	5310002416658	81349	M45913/3-5FG8C	NUT,SELF-LOCKING 5/16-24.....	4
					UOC:TTT	
* 48	PFOZZ	5342012032822	19207	12338650	MOUNT,RESIEIENT "A" PILLAR,REAR DOOR.....	4
					UOC:TTT	
* 49	PAOZZ	5310008094058	96906	MS27183-10	WASHER,FLAT 1/4.....	8
					UOC:TTT	
* 50	PAOZZ	5306013235535	19207	12340352-1	BOLT,MACHINE 1/4-20 X 3/4.....	8
					UOC:TTT	
* 51	PAOZZ	5365012538980	19207	12339379	SPACER,PLATE 0.063.....	2
					UOC:TTT	
* 52	PAOZZ	5340014211782	19207	12339386	STRIKER,CATCH.....	2
					UOC:TTT	
* 53	PAOZZ	5310014768589	24617	9414920	WASHER,FLAT 1/4.....	4
					UOC:TTT	
* 54	PAOZZ	5305000712505	80204	B1821BH025C088N	SCREW,CAP,HEXAGON H 1/4-20 X 7/8...	4
					UOC:TTT	

END OF FIGURE

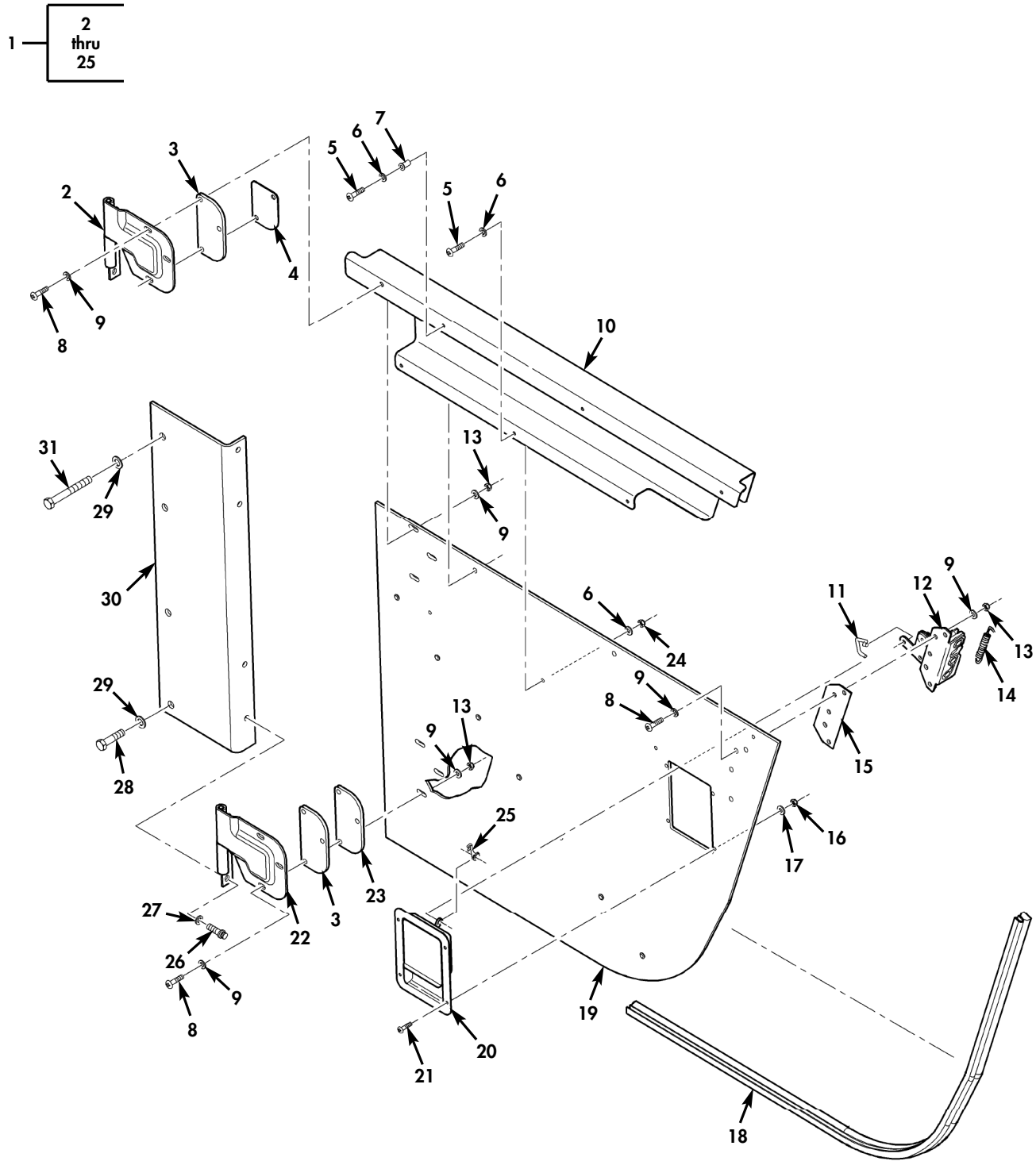

✱ QUANTITY SHOWN
REFLECTS ONE DOOR

Figure 166B. Rear Fixed Doors and Mounting Hardware (M1152A1) (Sheet 1 of 2).

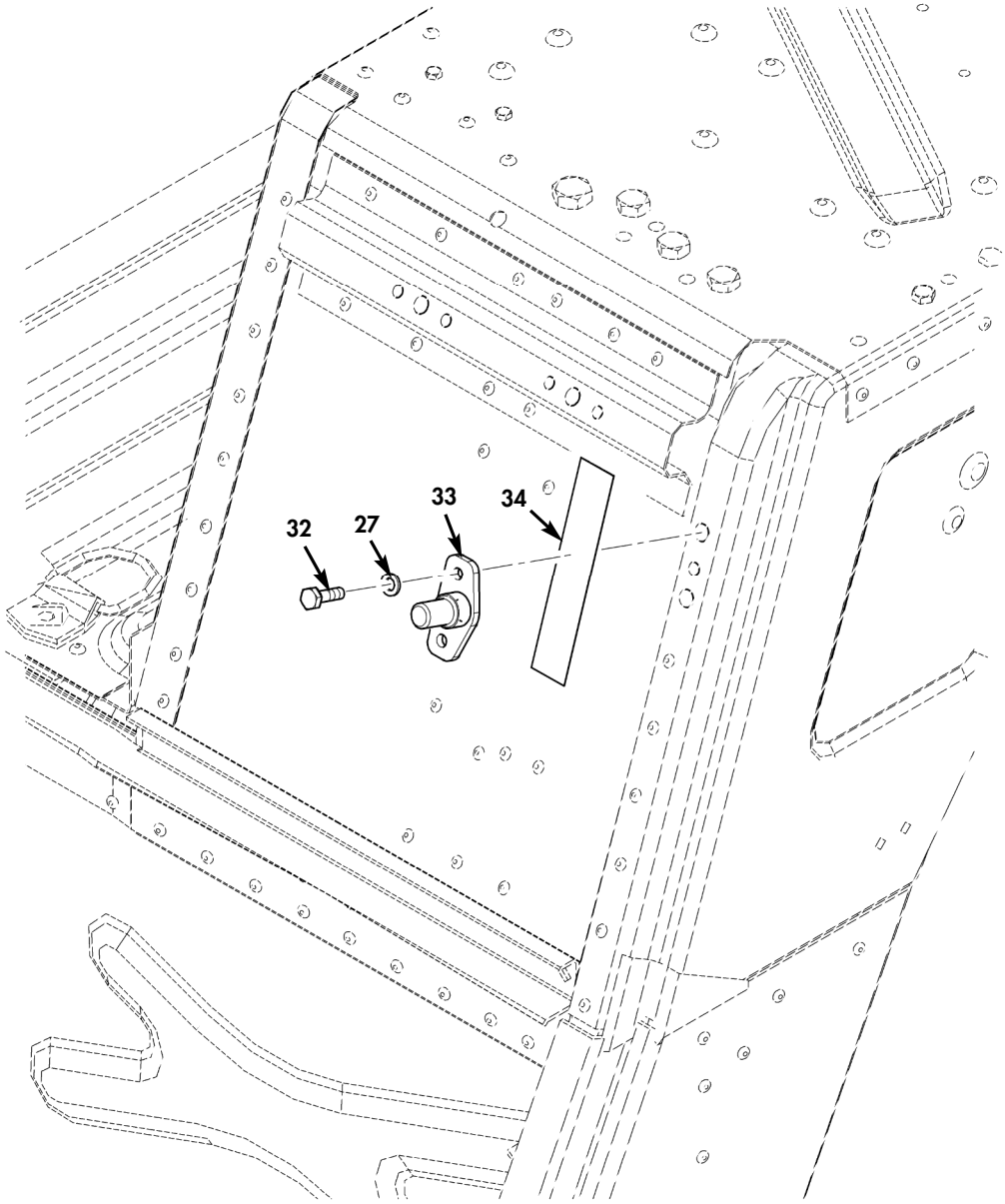

✱ QUANTITY SHOWN
REFLECTS ONE DOOR

Figure 166B. Rear Fixed Doors and Mounting Hardware (M1152A1) (Sheet 2 of 2).

(1) ITEM NO	(2) SMR CODE	(3) NSN	(4) CAGEC	(5) PART NUMBER	(6) DESCRIPTION AND USABLE ON CODES(UOC)	(7) QTY
					GROUP 1801 BODY,CAB,HOOD,AND HULL ASSEMBLY	
					FIG. 166B REAR FIXED DOORS AND MOUNTING HARDWARE(M1152A1)	
* 1	PAOOO	2510015678695	34623	6023383	DOOR,VEHICULAR L.H. UOC:UUA	1
* 1	PAOOO	2510015678697	34623	6023384	DOOR,VEHICULAR R.H. UOC:UUA	1
* 2	PAOZZ	5340011993498	19207	12339448-1	.HINGE,ACCESS DOOR L.H.,UPPER UOC:UUA	1
* 2	PAOZZ	5340011978675	19207	12339448-2	.LEAF,BUTT HINGE R.H.,UPPER UOC:UUA	1
* 3	PAOZZ	5365015680088	34623	6015794	.SPACER,PLATE L.H. OR R.H. UOC:UUA	2
* 4	PAOZZ	5365015678718	34623	6015795	.SPACER,PLATE L.H. OR R.H.,UPPER UOC:UUA	2
* 5	PAOZZ	5305009846212	80205	MS35206-265	.SCREW,MACHINE 10-24 X 3/4 UOC:UUA	6
* 6	PAOZZ	5310012349416	96906	MS51412-2	.WASHER,FLAT 1/4 UOC:UUA	9
* 7	PAOZZ	5325014759697	78276	ALS4-1024-225	.INSERT,SCREW THREAD 10-24 UOC:UUA	3
* 8	PAOZZ	5305009881727	80205	MS35206-283	.SCREW,MACHINE 1/4-20 X 1.00 UOC:UUA	10
* 9	PAOZZ	5310011023270	34623	2436161	.WASHER,FLAT 1/4 UOC:UUA	20
* 10	PAOZZ	2540015746689	34623	6023371-R	.ARMREST,VEHICULAR L.H. UOC:UUA	1
* 10	PAOZZ	2540015690270	34623	6023372	.ARMREST,VENICULAR R.H. UOC:UUA	1
* 11	PAOZZ	2540012012356	19207	12339377-1	.HOOK,REAR LATCH L.H. UOC:UUA	1
* 11	PAOZZ	2540012012357	19207	12339377-2	.HOOK,REAR LATCH R.H. UOC:UUA	1
* 12	PAOZZ	2540011974900	19220	29-300-UL	.LATCH,DOOR,VEHICULA L.H. UOC:UUA	1
* 12	PAOZZ	2540011965317	19220	29-300-UR	.LOCK,DOOR,VEHICULAR R.H. UOC:UUA	1
* 13	PAOZZ	5310000614650	81349	M45913/3-4CG8C	.NUT,SELF-LOCKING,HE 1/4-20 UOC:UUA	10
* 14	PAOZZ	5360012829316	19220	2-300-P5	.SPRING,HELICAL,EXTE UOC:UUA	1
* 15	PAOZZ	5365012538980	19207	12339379	.SPACER,PLATE L.H. OR R.H. UOC:UUA	V
* 16	PAOZZ	5310010389579	24617	454748	.NUT,SELF-LOCKING,HE 8-32 UOC:UUA	4
* 17	PAOZZ	5310004022778	24617	9416128	.WASHER,FLAT 8 UOC:UUA	4
* 18	PAOZZ	5330015682598	34623	6029296	.SEAL,NONMETALLIC SP L.H. OR R.H. UOC:UUA	1
* 19	XAOZZ		34623	6023368	.PLATE,METAL L.H. OR R.H. UOC:UUA	1

(1) ITEM NO	(2) SMR CODE	(3) NSN	(4) CAGEC	(5) PART NUMBER	(6) DESCRIPTION AND USABLE ON CODES(UOC)	(7) QTY
* 20	PAOZZ	5340012094870	19220	249	.HANDLE,RECESS L.H. OR R.H..... UOC:UUA	1
* 21	PAOZZ	5305009846195	80205	MS35206-247	.SCREW,MACHINE 8-32 X 3/4..... UOC:UUA	4
* 22	PAOZZ	5340012042458	19207	12339448-3	.LEAF,BUTT HINGE L.H.,LOWER..... UOC:UUA	1
* 22	PAOZZ	5340012019076	19207	12339448-4	.LEAF,BUTT HINGE R.H.,LOWER..... UOC:UUA	1
* 23	PAOZZ	5365015681549	34623	6015793	.SPACER,PLATE..... UOC:UUA	1
* 24	PAOZZ	5310012699245	7X677	190254	.NUT,SELF-LOCKING,HE 10-24..... UOC:UUA	3
* 25	PAOZZ	5340011982240	19207	12339731	.CLIP-CLEVIS,ROD RET L.H..... UOC:UUA	1
* 25	PAOZZ	5340011982241	34623	5584302	.CLIP-CLEVIS,ROD RET R.H..... UOC:UUA	1
* 26	PAOZZ	5306013235535	19207	12340352-1	BOLT,MACHINE 1/4-20 X 3/4..... UOC:UUA	4
* 27	PAOZZ	5310011023270	34623	2436161	WASHER,FLAT 1/4..... UOC:UUA	6
* 28	PAOZZ	5305007252317	80204	B1821BH038C150N	SCREW,CAP,HEXAGON H 3/8-16 X 1.50.. UOC:UUA	2
* 29	PAOZZ	5310014124013	24617	2436163	WASHER,FLAT 3/8..... UOC:UUA	4
* 30	PAOZZ	2590015681077	34623	6023381	BRACKET,VEHICULAR C L.H..... UOC:UUA	1
* 30	PAOZZ	2590015678710	34623	6023382	BRACKET,VEHICULAR C R.H..... UOC:UUA	1
* 31	PAOZZ	5305008465703	80204	B1821BH038C300N	SCREW,CAP,HEXAGON H 3/8-16 X 3.00.. UOC:UUA	2
* 32	PAOZZ	5305000712505	80204	B1821BH025C088N	SCREW,CAP,HEXAGON H 1/4-20 X 7/8... UOC:UUA	2
* 33	PAOZZ	5340014211782	19207	12339386	STRIKE,CATCH L.H.OR R.H..... UOC:UUA	1
* 34	MOOZZ		19207	12339376-2-AR	TAPE,PRESSURE SENSI MAKE FROM TAPE P/N 12339376-2,LENGTH AS REQUIRED... UOC:UUA	1

END OF FIGURE

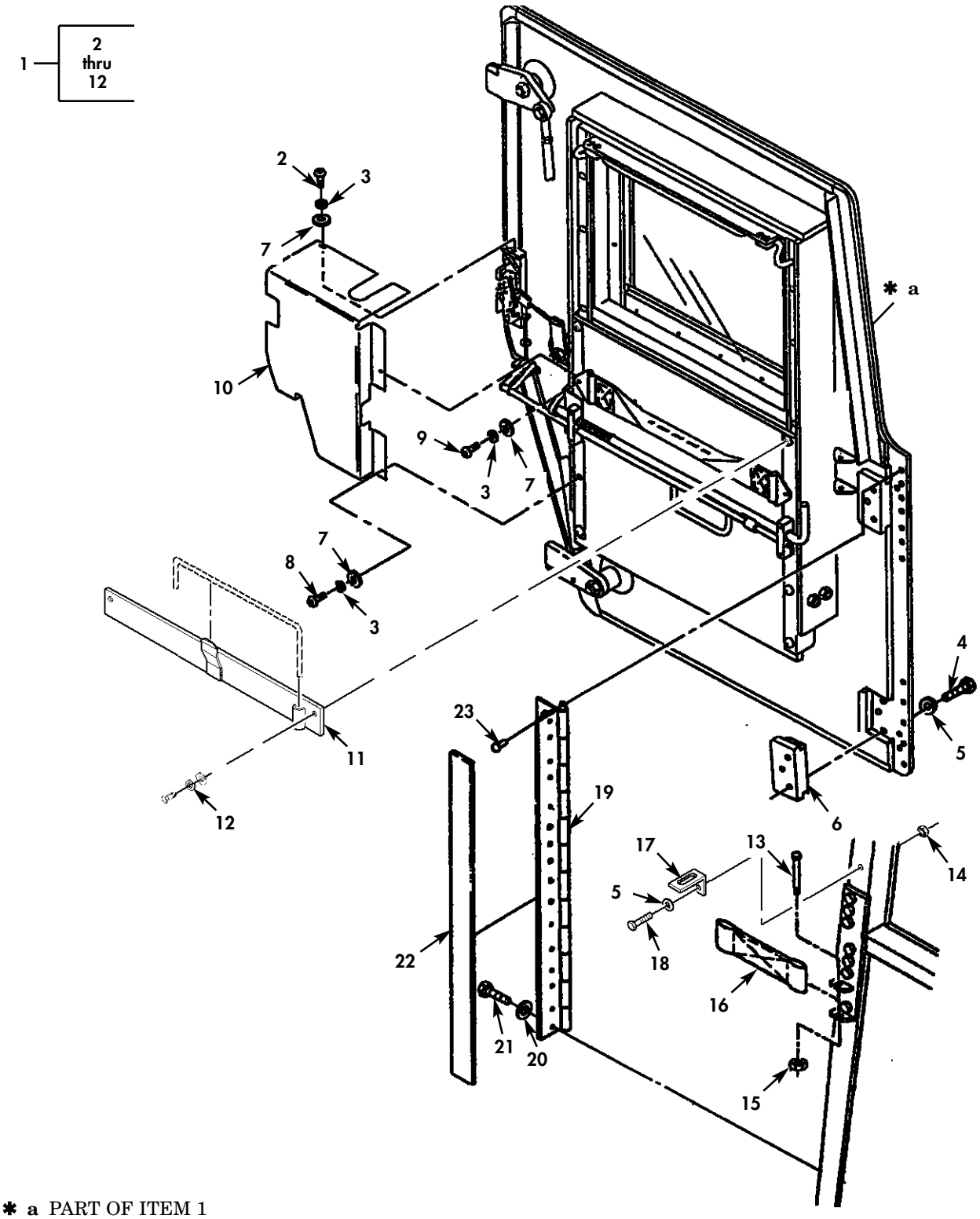

✱ **a** PART OF ITEM 1
FOR BREAKDOWN, SEE
FIGURE 168, 169, 170

Figure 167. Door Assembly and Overlay Kit, Front (Sheet 1 of 2).

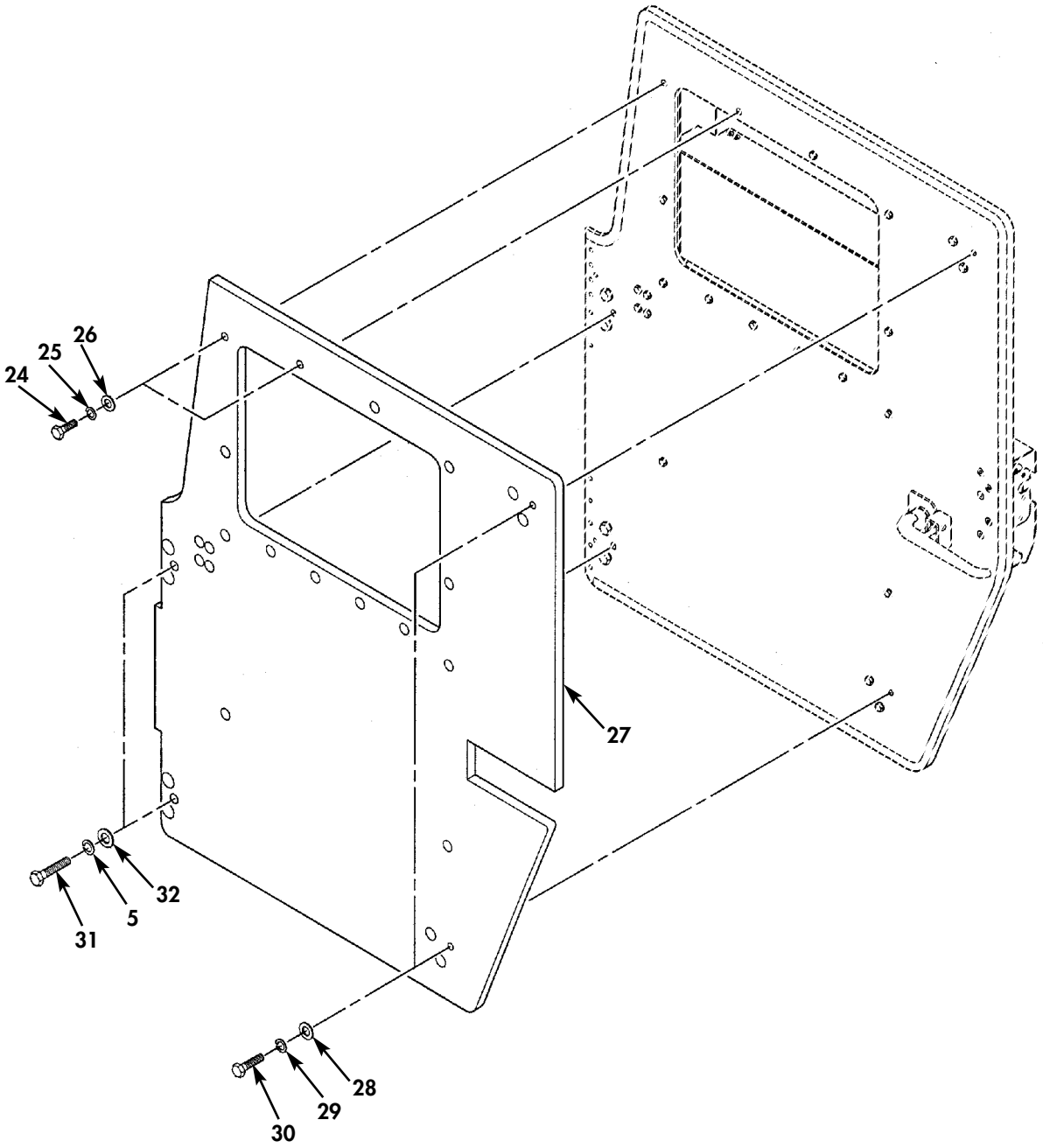

Figure 167. Door Assembly and Overlay Kit, Front (Sheet 2 of 2).

(1) ITEM NO	(2) SMR CODE	(3) NSN	(4) CAGEC	(5) PART NUMBER	(6) DESCRIPTION AND USABLE ON CODES(UOC)	(7) QTY
					GROUP 1801 BODY,CAB,HOOD AND HULL ASSEMBLY	
					FIG. 167 DOOR ASSEMBLY,AND OVERLAY KIT,FRONT	
1	PBOFF	2510014359689	6W728	4660851	DOOR,VEHICULAR LEFT FRONT..... UOC:XBB	1
1	PBOFF	2510014359694	6W728	4660853	DOOR,VEHICULAR RIGHT FRONT..... UOC:XBB	1
2	PAOZZ	5305014464660	6W728	4397018-072	.SCREW,CAP,SOCKET HE 10-24 X 1/2... UOC:XBB	2
3	PAOZZ	5310014341385	6W728	4397004-005	.WASHER,LOCK #10..... UOC:XBB	4
4	PAOZZ	5306014365393	6W728	4397001-062	.BOLT,MACHINE 3/8-24 X 1.25..... UOC:XBB	6
* 5	PAOZZ	5310014177273	6W728	4397004-008	.WASHER,LOCK 3/8..... UOC:XBB	8
* 6	PAOZZ	2510014349330	6W728	4660884	.STRAP,CHECK,DOOR VE..... UOC:XBB	2
7	PAOZZ	5310014177333	6W728	4397005-008	.WASHER,FLAT 7/32..... UOC:XBB	4
8	PAOZZ	5305014652823	6W728	4397018-073	.SCREW,CAP,SOCKET HE..... UOC:XBB	1
9	PAOZZ	5305014307406	6W728	4397018-074	.SCREW,CAP,SOCKET HE #10-24 X 3/4.. UOC:XBB	2
10	PFOZZ	2590014350078	6W728	4660946	.COVER,VEHICULAR COM LATCH,LEFT FRONT..... UOC:XBB	1
10	PFOZZ	5340014328594	6W728	4660948	.COVER,PROTECTIVE,DU LATCH,RIGHT FRONT..... UOC:XBB	1
* 11	PAOZZ		19207	12460360-1	.BRACE,DOOR L.H.,FRONT..... UOC:XBB	1
* 11	PAOZZ		19207	12460359-1	.BRACE,DOOR R.H.,FRONT..... UOC:XBB	1
* 12	PAOZZ	5310009222017	72582	120217	.WASHER,LOCK..... UOC:XBB	4
* 13	PAOZZ	5306014339189	6W728	4397000-018	BOLT,MACHINE 1/4-20 X 3.00..... UOC:XBB	4
* 14	PAOZZ	5310008140673	96906	MS51943-33	NUT,SELF-LOCKING..... UOC:XBB	2
* 15	PAOZZ	5310014398173	6W728	4397064-001	NUT,SELF-LOCKING,HE 1/4-20..... UOC:XBB	4
* 16	PAOZZ	5340014176474	6W728	4668245	STRAP,WEBBING FRONT..... UOC:XBB	2
* 17	PAOZZ		19207	12460361	BRACKET,MOUNTING FRONT,L.H. AND R.H. UOC"XBB	2
* 18	PAOZZ	5305002264831	80204	B1821BH031C150N	SCREW,CAP,HEXAGON H 5/16-18 X 1.50. UOC:XBB	2
* 19	PAOZZ	2510014360773	6W728	4660928	HINGE,DOOR,VEHICULA FRONT DOOR LEFT SIDE..... UOC:XBB	1

(1) ITEM NO	(2) SMR CODE	(3) NSN	(4) CAGEC	(5) PART NUMBER	(6) DESCRIPTION AND USABLE ON CODES(UOC)	(7) QTY
* 19	PAOZZ	2510014360772	6W728	4660943	HINGE,DOOR,VEHICULA FRONT DOOR RIGHT SIDE..... UOC:XBB	1
* 20	PAOZZ	5310014363742	6W728	4397005-015	WASHER,FLAT 3/8..... UOC:XBB	16
* 21	PAOZZ	5305014381201	6W728	4397012-072	SCREW,MACHINE 3/8-16 X 3.50..... UOC:XBB	16
* 22	PAOZZ	2540014748719	6W728	4668987-001	INSULATION,THERMAL 1/2 X 3/4 CLOSED CELL WITH ADHESIVE..... UOC:XBB	4
* 23	PAOZZ	5320011509681	05693	SSPV-810	RIVET,BLIND .250 X .350-.625..... UOC:XBB	15
* 24	PAOZZ	5305014366379	6W728	4397000-008	SCREW,CAP,HEXAGON H 1/4-20 X 1.00. PART OF KIT P/N 6431390..... UOC:XBB	2
* 25	PAOZZ	5310014330941	6W728	4397004-006	WASHER,LOCK 1/4 PART OF KIT P/N. 6431390..... UOC:XBB	2
* 26	PAOZZ	5310014357784	6W728	4397005-010	WASHER,FLAT 9/32 X .625 PART OF KIT P/N 6431390..... UOC:XBB	2
* 27	PAOZZ	2540015350837	6W728	6431368-01M2	OVERLAY,DOOR L.H.,FRONT TAN,R.H FRONT,GREEN PART OF KIT P/N 6431390. UOC:XBB	2
* 28	PAOZZ	5310014229287	6W728	4397005-012	WASHER,FLAT 11/32 X .688 PART OF KIT P/N 6431390..... UOC:XBB	2
* 29	PAOZZ	5310014179942	6W728	4397004-007	WASHER,LOCK PART OF KIT P/N 6431390. UOC:XBB	2
* 30	PAOZZ	5305015355634	6W728	4397001-036	SCREW,CAP,HEXAGON H PART OF KIT P/N 6431390..... UOC:XBB	2
* 31	PAOZZ	5305015355773	6W728	4397001-065	SCREW,CAP,HEXAGON H PART OF KIT P/N 6431390..... UOC:XBB	2
* 32	PAOZZ	5310014192413	6W728	4397005-014	WASHER,FLAT 13/32 X .812 PART OF KIT P/N 6431390..... UOC:XBB	2

END OF FIGURE

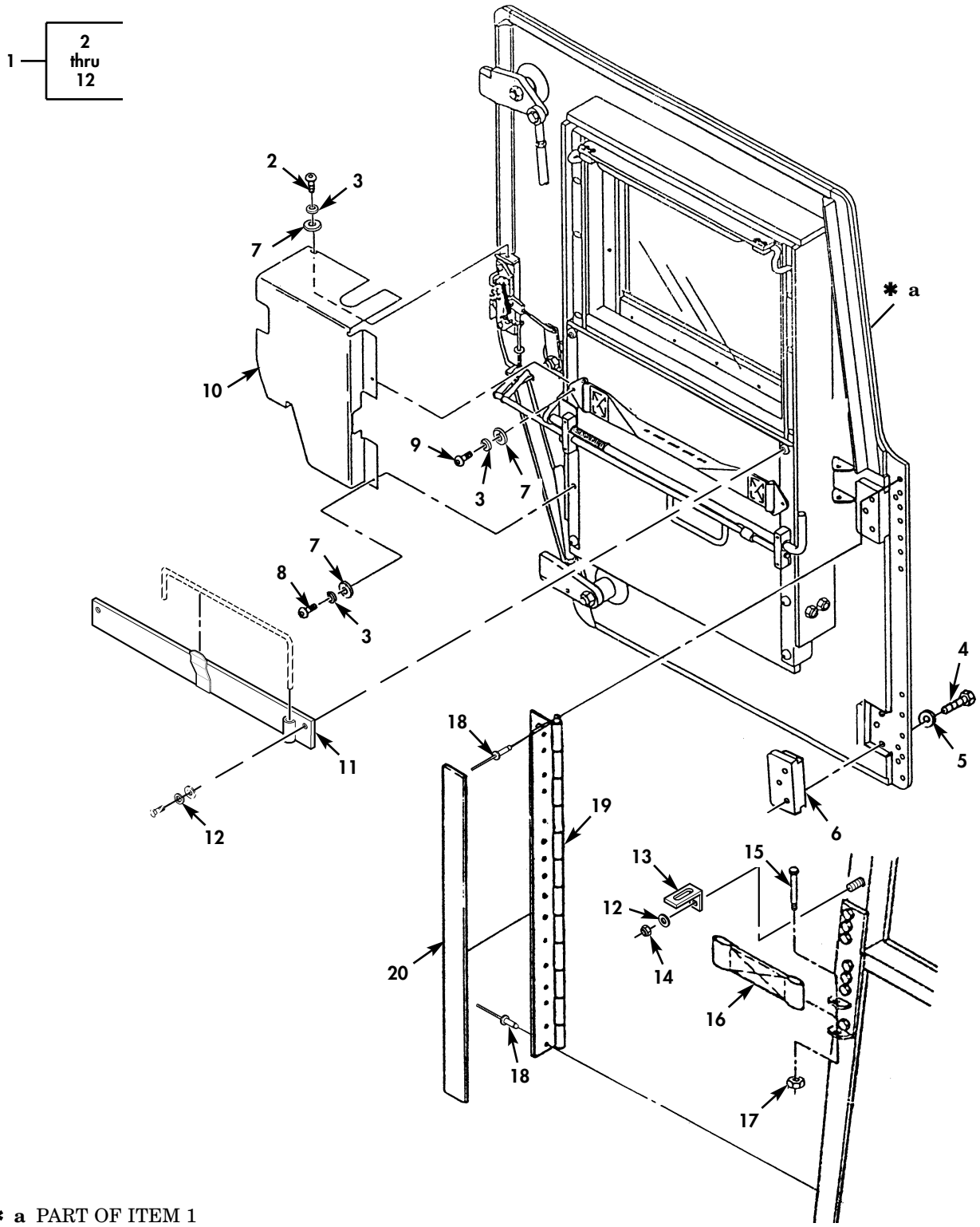

✱ **a** PART OF ITEM 1
FOR BREAKDOWN, SEE
FIGURE 168, 169, 170

Figure 167A. Door Assembly and Overlay Kit, Rear (Sheet 1 of 2).

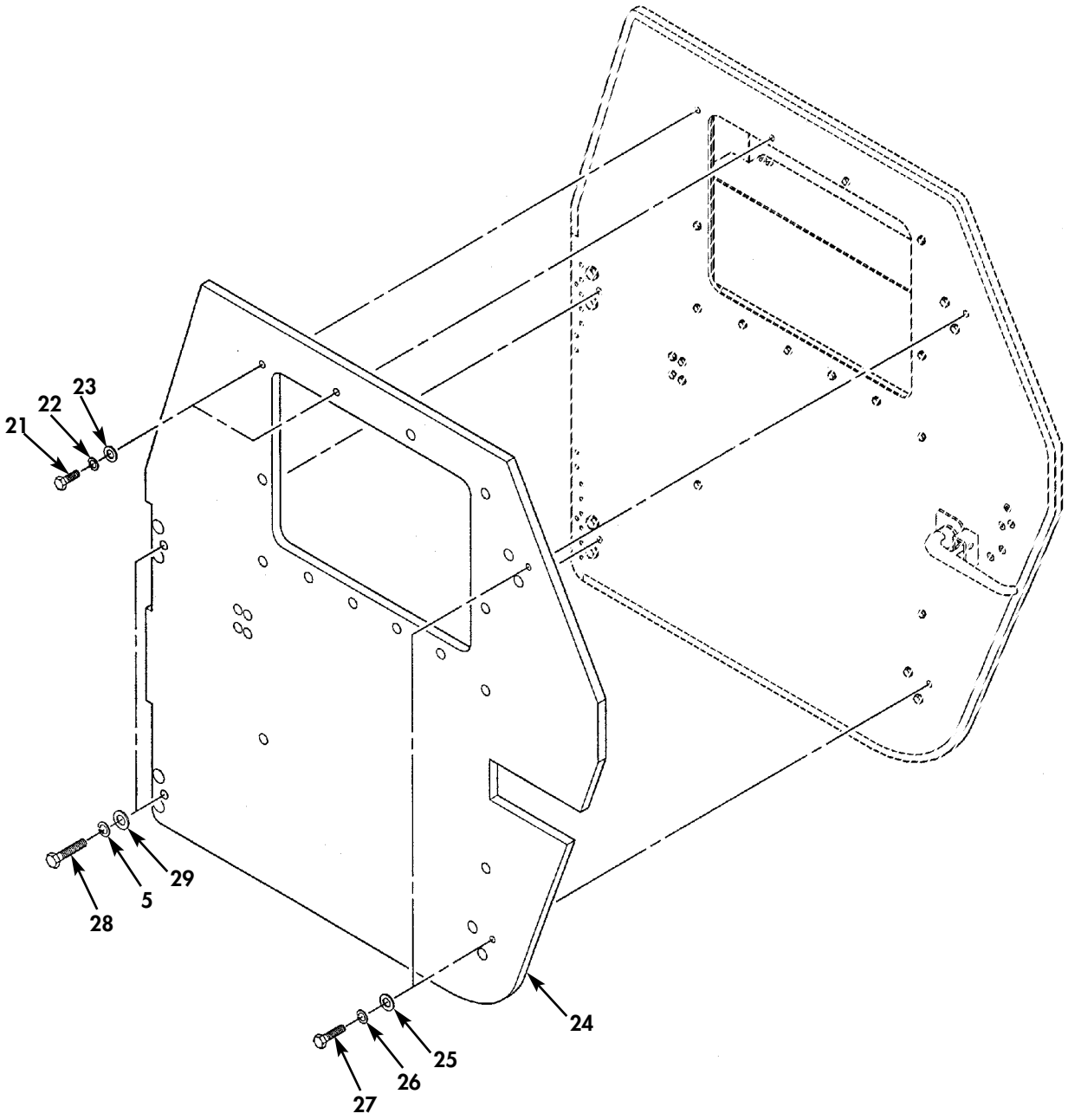

Figure 167A. Door Assembly and Overlay Kit, Rear (Sheet 2 of 2).

(1) ITEM NO	(2) SMR CODE	(3) NSN	(4) CAGEC	(5) PART NUMBER	(6) DESCRIPTION AND USABLE ON CODES(UOC)	(7) QTY
					GROUP 1801 BODY,CAB,HOOD AND HULL ASSEMBLY	
					FIG. 167A DOOR ASSEMBLY,AND OVERLAY KIT,REAR	
1	PBOFF	2510014359695	6W728	4660852	DOOR,VEHICULAR LEFT REAR..... UOC:XBB	1
1	PBOFF	2510014359691	6W728	4660854	DOOR,VEHICULAR RIGHT REAR..... UOC:XBB	1
2	PAOZZ	5305014464660	6W728	4397018-072	.SCREW,CAP,SOCKET HE #10-24 X 1/2.. UOC:XBB	2
3	PAOZZ	5310014341385	6W728	4397004-005	.WASHER,LOCK #10..... UOC:XBB	4
4	PAOZZ	5306014365393	6W728	4397001-062	.BOLT,MACHINE 3/8-24 X 1.25..... UOC:XBB	6
* 5	PAOZZ	5310014177273	6W728	4397004-008	.WASHER,LOCK 3/8..... UOC:XBB	8
* 6	PAOZZ	2510014349330	6W728	4660884	.STRAP,CHECK,DOOR,VE..... UOC:XBB	2
7	PAOZZ	5310014177333	6W728	4397005-008	.WASHER,FLAT 7/32..... UOC:XBB	4
8	PAOZZ	5305014652823	6W728	4397018-073	.SCREW,CAP,SOCKET HE..... UOC:XBB	1
9	PAOZZ	5305014307406	6W728	4397018-074	.SCREW,CAP,SOCKET HE #10-24 X 3/4.. UOC:XBB	2
10	PFOZZ	5340014328591	6W728	4660947	.COVER,PROTECTIVE DU LATCH,LEFT REAR..... UOC:XBB	1
10	PFOZZ	5340014328592	6W728	4660949	.COVER,PROTECTIVE DU LATCH,RIGHT REAR..... UOC:XBB	1
* 11	PAOZZ		19207	12460360-2	.BRACE,DOOR L.H.,REAR..... UOC:XBB	1
* 11	PAOZZ		19207	12460359-2	.BRACE,DOOR R.H.,REAR..... UOC:XBB	1
* 12	PAOZZ	5310009222017	72582	120217	.WASHER,LOCK..... UOC:XBB	4
* 13	PAOZZ		19207	12460361	BRACKET,MOUNTING..... UOC:XBB	2
* 14	PAOZZ	5310008140673	96906	MS51943-33	NUT.,SELF-LOCKING..... UOC:XBB	2
* 15	PAOZZ	5306014339189	6W728	4397000-018	BOLT,MACHINE 1/4-20 X 3.00..... UOC:XBB	4
* 16	PAOZZ	5340014191275	6W728	4668246	STRAP,WEBBING REAR..... UOC:XBB	2
* 17	PAOZZ	5310014398173	6W728	4397064-001	NUT,SELF-LOCKING,HE 1/4-20..... UOC:XBB	4
* 18	PAOZZ	5320014399728	6W728	4397081-011	RIVET,BLIND 1/4 X .50-.625..... UOC:XBB	35
* 19	PAOZZ	2510014203026	6W728	4668506	HINGE,DOOR,VEHICULA HINGE,REAR DOOR RIGHT SIDE..... UOC:XBB	1
* 19	PAOZZ	2510014181924	6W728	4668520	HINGE,DOOR VEHICULA HINGE,REAR	1

(1) ITEM NO	(2) SMR CODE	(3) NSN	(4) CAGEC	(5) PART NUMBER	(6) DESCRIPTION AND USABLE ON CODES(UOC)	(7) QTY
					DOOR LEFT SIDE..... UOC:XBB	
* 20	PAOZZ	2540014748719	6W728	4668987-001	INSULATION,THERMAL 1/2 X 3./4 CLOSED CELL WITH ADHESIVE..... UOC:XBB	4
* 21	PAOZZ	5305014366379	6W728	4397000-008	SCREW,CAP,HEXAGON H 1/4-20 X 1.00.. UOC:XBB	2
* 22	PAOZZ	5310014330941	6W728	4397004-006	WASHER,LOCK 1/4 PART OF KIT P/N. 6431390..... UOC:XBB	2
* 23	PAOZZ	5310014357784	6W728	4397005-010	WASHER,LOCK 9/32 X .625 PART OF KIT P/N 6431390..... UOC:XBB	2
* 24	PAOZZ		6W728	6431369-01M2	OVERLAY,DOOR L.H.,REAR,TAN R.H., REAR,GREEN PART OF KIT P/N 6431390.. UOC:XBB	2
* 25	PAOZZ	5310014229287	6W728	4397005-012	WASHER,FLAT 11/32 X .688 PART OF KIT P/N 6431390..... UOC:XBB	2
* 26	PAOZZ	5310014179942	6W728	4397004-007	WASHER,LOCK PART OF KIT P/N 6431390. UOC:XBB	2
* 27	PAOZZ		6W728	4397001-036	SCREW,CAP,HEXAGON H PART OF KIT P/N 6431390..... UOC:XBB	2
* 28	PAOZZ		6W728	4397001-065	SCREW,CAP,HEXAGON H PART OF KIT P/N 6431390..... UOC:XBB	2
* 29	PAOZZ	5310014192413	6W728	4397005-014	WASHER,FLAT 13/32 X .812 PART OF KIT P/N 6431390..... UOC:XBB	2

END OF FIGURE

UNIT, DIRECT SUPPORT, AND GENERAL SUPPORT MAINTENANCE
REPAIR PARTS AND SPECIAL TOOLS LIST

TRUCK, UTILITY: S250 SHELTER CARRIER, 4X4, M1113 (2320-01-412-0143),
TRUCK, UTILITY: UP-ARMORED CARRIER, 4X4, M1114 (2320-01-413-3739),
TRUCK, UTILITY: EXPANDED CAPACITY, ARMAMENT CARRIER, 4X4, M1151 (2320-01-518-7330),
TRUCK, UTILITY: EXPANDED CAPACITY, ENHANCED, 4X4, M1152 (2320-01-518-7332)

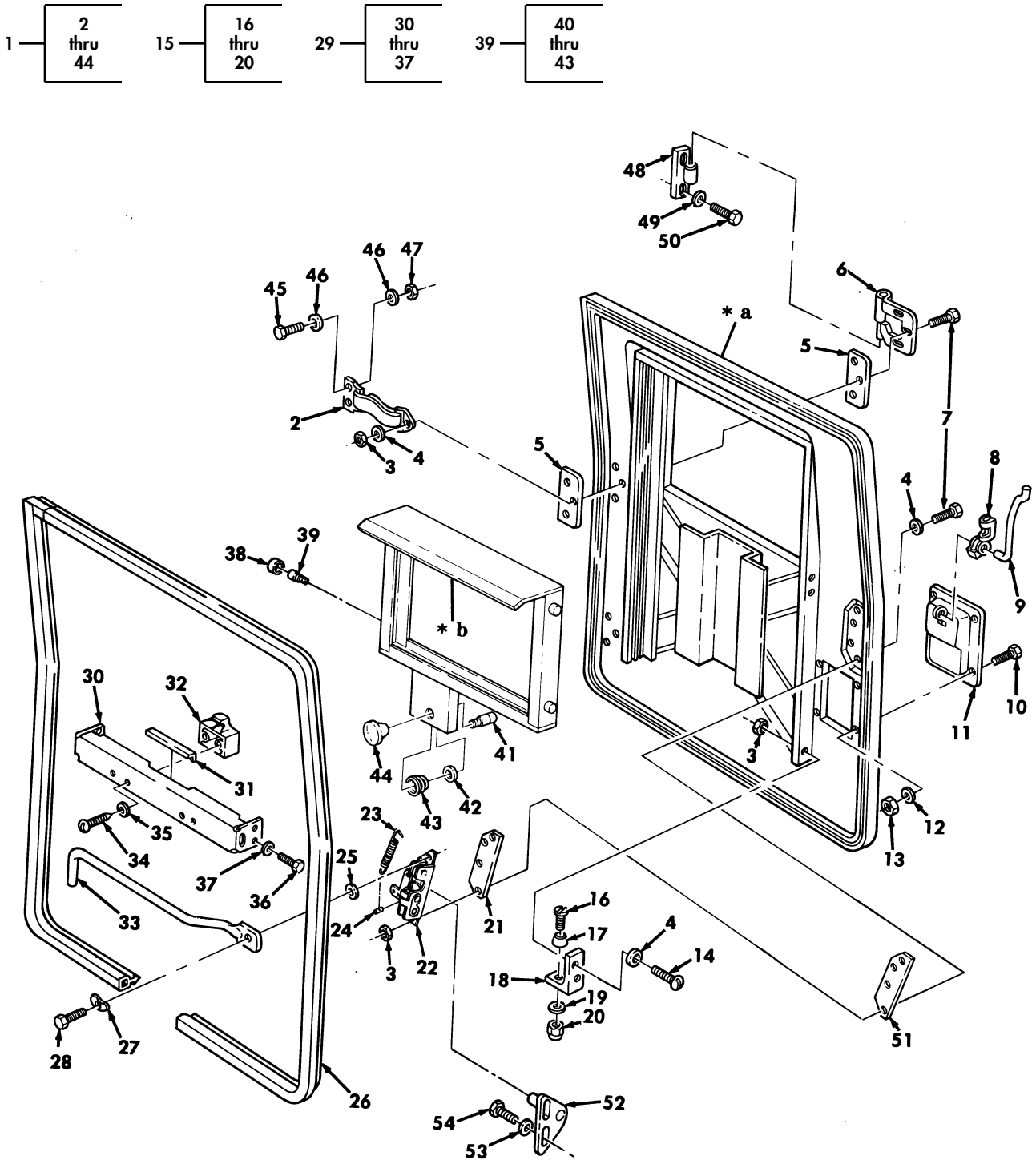

✱ **a** PART OF ITEM 1
✱ **b** PART OF ITEM 40

Figure 167B. Crew Door Assembly, Front, Ballistic.

(1) ITEM NO	(2) SMR CODE	(3) NSN	(4) CAGEC	(5) PART NUMBER	(6) DESCRIPTION AND USABLE ON CODES(UOC)	(7) QTY
					GROUP 1801 BODY,CAB,HOOD,AND HULL ASSEMBLY	
					FIG. 167B CREW DOOR ASSEMBLY,FRONT BALLISTIC	
* 1	PAOFF	2510012573903	19207	12339480-1	DOOR,VEHICULAR BASIC ARMOR,L.H..... UOC:TTT	1
* 1	PAOFF	2510012541500	19207	12339480-2	DOOR,VEHICULAR BASIC ARMOR,R.H..... UOC:TTT	1
* 2	PAOZZ	5340012538971	31272	45262-10	.STRAP,WEBBING UPPER,L.H..... UOC:TTT	1
* 2	PAOZZ	5340012559918	31272	45262-11	.STRAP,WEBBING UPPER,R.H..... UOC:TTT	1
* 3	PAOZZ	5310012544284	19207	12339730	.NUT,SELF-LOCKING 1/4-20..... UOC:TTT	14
* 4	PAOZZ	5310014768589	24617	9414920	.WASHER,FLAT 1/4..... UOC:TTT	20
* 5	PFOZZ	5365012014749	34623	5584436	.SPACER,PLATE INNER AND OUTER HINGE ,BASIC ARMOR..... UOC:TTT	4
* 6	PFOZZ	5340012042458	34623	5584325	.LEAF,BUTT HINGE LOWER,L.H..... UOC:TTT	1
* 6	PFOZZ	5340011993498	19207	12339448-1	.HINGE,ACCESS DOOR UPPER,L.H..... UOC:TTT	1
* 6	PFOZZ	5340012019076	19207	12339448-4	.LEAF,BUTT HINGE LOWER,R.H..... UOC:TTT	1
* 6	PFOZZ	5340011978675	34623	5584867	.LEAF,BUTT HINGE UPPER,R.H..... UOC:TTT	1
* 7	PAOZZ	5305010524438	96906	MS51957-134	.SCREW,MACHINE 1/4-20 X 1.38..... UOC:TTT	10
* 8	PAOZZ	5340011982240	19207	12339731	.CLIP-CLEVIS,ROD L.H..... UOC:TTT	1
* 8	PAOZZ	5340011982241	34623	5584302	.CLIP-CLEVIS,ROD R.H..... UOC:TTT	1
* 9	PFOZZ	2510011991498	19207	12339378-1	.HOOK,LATCH VEHIC L.H..... UOC:TTT	1
* 9	PFOZZ	5340011974901	19207	12339378-2	.LEVER,LOCK REALE R.H..... UOC:TTT	1
* 10	PAOZZ	5305009846196	80205	MS35206-248	.SCREW,MACHINE #8-32 X 7/8..... UOC:TTT	4
* 11	PAOZZ	5340012094870	19220	249	.HANDLE,RECESS FRONT..... UOC:TTT	1
* 12	PAOZZ	5310012538952	34623	5593241	.WASHER,FLAT #8..... UOC:TTT	8
* 13	PAOZZ	5310011983487	19207	12339728-3	.NUT,SELF-LOCKING #8-32..... UOC:TTT	4
* 14	PAOZZ	5305009881725	80205	NAMS35206-281	.SCREW,MACHINE 1/4-20 X 3/4..... UOC:TTT	4
* 15	PAOOO	2510011965316	19207	12339416-1	.STOP ASSEMBLY,WIND L.H..... UOC:TTT	2
* 15	PAOOO	5342011958039	19207	12339416-2	.STOP ASSEMBLY,WIND R.H..... UOC:TTT	2

(1) ITEM NO	(2) SMR CODE	(3) NSN	(4) CAGEC	(5) PART NUMBER	(6) DESCRIPTION AND USABLE ON CODES(UOC)	(7) QTY
* 16	PAOZZ	5305000509233	96906	MS51957-67	..SCREW,MACHINE #10-24 X 1.00..... UOC:TTT	1
* 17	PAOZZ	5340012038675	34623	5579257	..BUMPER,NONMETALLIC..... UOC:TTT	1
* 18	PAOZZ	5340012030324	19207	12339404-1	..BRACKET,ANGLE L.H..... UOC:TTT	1
* 18	PAOZZ	5340011959107	19207	12339404-2	..BRACKET,ANGLE R.H..... UOC:TTT	1
* 19	PAOZZ	5310012538953	34623	5593242	..WASHER,FLAT #10..... UOC:TTT	1
* 20	PAOZZ	5310012033217	19207	12339728-2	..NUT,SELF-LOCKING #10-24..... UOC:TTT	1
* 21	PFOZZ	5365011979383	34623	5584299	.SPACER,PLATE..... UOC:TTT	1
* 22	PAOZZ	2540011974900	19207	12340039-1	.LATCH,DOOR VEHICU L.H..... UOC:TTT	1
* 22	PFOZZ	2540011965317	19220	9-300-U-R	.LOCK,DOOR,VEHICULA R.H..... UOC:TTT	1
* 23	PAOZZ	5360012829316	19220	2-300-P5	.SPRING,HELICAL EXTE..... UOC:TTT	1
* 24	PAOZZ	5315013003012	19220	56598-4	.PIN,STRAIGHT HEADED..... UOC:TTT	1
* 25	PAOZZ	5310000806004	96906	MS27183-14	.WASHER,FLAT 3/8..... UOC:TTT	1
* 26	PAOZZ	5330011988789	19207	12339463-1	.SEAL,NONMETALLIC SP L.H..... UOC:TTT	1
* 26	PAOZZ	5330011967968	19207	12339463-2	.SEAL,NONMETALLIC SP R.H..... UOC:TTT	1
* 27	PAOZZ	5310011983428	19207	12340257-1	.WASHER,SPRING TENSI 3/8..... UOC:TTT	1
* 28	PAOZZ	5306012042139	34623	5589067	.BOLT,MACHINE 1/4-20 X 1/2..... UOC:TTT	1
* 29	PAOOO	2540011995812	34623	12339454-1	.LATCH,DOOR,VEHICU L.H..... UOC:TTT	1
* 29	PAOOO	5340011987580	34623	5584259	.BRACKET,MOUNTING R.H..... UOC:TTT	1
* 30	XAOZZ		34623	5588063	..BRACKET,ASSEMBLY..... UOC:TTT	1
* 31	MOOZZ		34623	5584707	..PROTECTOR,EDGE MAKE FROM PAD P/N 12339902-1,8.90 INCHES LONG..... UOC:TTT	1
* 32	PFOZZ	2510011991499	19207	12339450	..GUIDE,DOOR LATCH..... UOC:TTT	1
* 33	PFOZZ	3040012001015	19207	12339452-1	..LEVER,REMOTE CON L.H..... UOC:TTT	1
* 33	PFOZZ	2510012113229	34623	5584264	..ARM,DOOR LATCH R.H..... UOC:TTT	1
* 34	PAOZZ	5305004324205	80205	MS51861-49	..SCREW,TAPPING #10-16 X 1.00..... UOC:TTT	2
* 35	PAOZZ	5310012538953	34623	5593242	..WASHER,FLAT #10..... UOC:TTT	2
* 36	PAOZZ	5305009846193	80205	MS35206-245	..SCREW,MACHINE #8-32 X 1/2..... UOC:TTT	4

(1) ITEM NO	(2) SMR CODE	(3) NSN	(4) CAGEC	(5) PART NUMBER	(6) DESCRIPTION AND USABLE ON CODES(UOC)	(7) QTY
* 37	PAOZZ	5310012538952	34623	5593241	..WASHER,FLAT #8..... UOC:TTT	V
* 38	PAOZZ	5355012526504	19207	12339380	.KNOB..... UOC:TTT	4
* 39	PAOZZ	5315012042328	19207	12339725	.PIN,SHOULDER HEADLE..... UOC:TTT	4
* 40	PAOOO	2510011899748	19207	12339374-2	.WINDOW ASSEMBLY,VEHI BALLISTIC FRONT DOOR,BASIC ARMOR,L.H..... UOC:TTT	1
* 40	PAOOO	2510011887381	19207	12339374-1	.WINDOW ASSEMBLY,VEHI BALLISTIC FRONT DOOR,BASIC ARMOR,R.H..... UOC:TTT	1
* 41	PAOZZ	5315012038543	19207	12339726	..PIN,SHOULDER HEADLE..... UOC:TTT	1
* 42	PAOZZ	5325014425845	96906	MS16633-1050	..RING,RETAINING..... UOC:TTT	1
* 43	PFOZZ	5360011983525	19207	12339369	.SPRING,HELICAL COMP..... UOC:TTT	1
* 44	PAOZZ	5355012988571	80813	1-236-005	..KNOB..... UOC:TTT	1
* 45	PAOZZ	5306002259089	80205	MS90726-34	BOLT,MACHINE 5/16-24 X 1.00..... UOC:TTT	4
* 46	PAFZZ	5310000814219	96906	MS27183-12	WASHER,FLAT 5/16..... UOC:TTT	8
* 47	PAFZZ	5310002416658	81349	M45913/3-5FG8C	NUT,SELF-LOCKING 1/4-20..... UOC:TTT	4
* 48	PFOZZ	5342012032822	19207	12338650	MOUNT,RESILIENT..... UOC:TTT	4
* 49	PAOZZ	5310008094058	96906	MS27183-10	WASHER,FLAT 1/4..... UOC:TTT	8
* 50	PAOZZ	5306013235535	19207	12340352-1	BOLT,MACHINE 1/4-20 X 3/4..... UOC:TTT	8
* 51	PAOZZ	5365012538980	19207	12339379	SPACER,PLATE 0.063..... UOC:TTT	2
* 52	PFOZZ	5340012111645	34623	5584294	LATCH,RIM..... UOC:TTT	2
* 53	PAOZZ	5310014768589	24617	9414920	WASHER,FLAT 1/4..... UOC:TTT	4
* 54	PAOZZ	5305000712505	80204	B1821BH025C088N	SCREW,CAP,HEXAGON H 1/4-20 X 7/8... UOC:TTT	4

END OF FIGURE

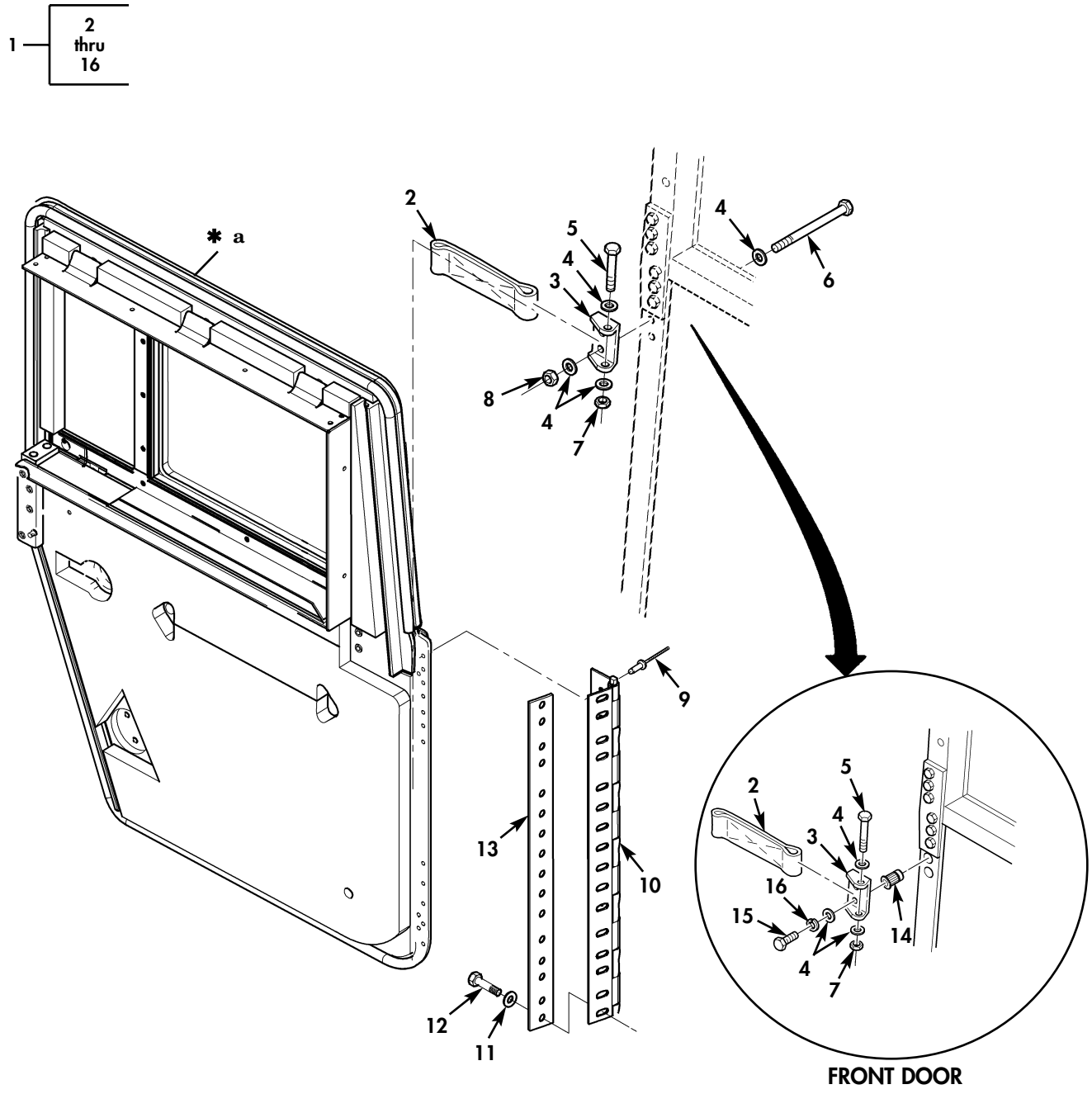

✱ **a** PART OF ITEM 1

Figure 167C. Ballistic Door Assembly Mounting.

(1) ITEM NO	(2) SMR CODE	(3) NSN	(4) CAGEC	(5) PART NUMBER	(6) DESCRIPTION AND USABLE ON CODES(UOC)	(7) QTY
					GROUP 1801 BODY,CAB,HOOD,AND HULL ASSEMBLY	
					FIG. 167C BALLISTIC DOOR ASSEMBLY MOUNTING	
* 1	PAOOO	2510015352778	6W728	6432762-200M1	DOOR,VEHICULAR FRONT,L.H.,TAN..... UOC:TTT,UUU	1
* 1	PAOOO	2510015352780	6W728	6432763-200M1	DOOR,VEHICULAR FRONT,R.H.,TAN..... UOC:TTT,UUU	1
* 1	PAOOO	2510015352781	6W728	6432764-200M1	DOOR,VEHICULAR REAR,L.H.,TAN..... UOC:TTT,UUU	1
* 1	PAOOO	2510015352779	6W728	6432765-200M1	DOOR,VEHICULAR REAR,R.H.,TAN..... UOC:TTT,UUU	1
* 2	PAOZZ	5340014176474	6W728	4668245	.STRAP,DOOR CHECK..... UOC:TTT,UUU	4
* 3	PAOZZ		6W728	6432711-200M1	.BRACKET,DOOR,SAFE TAN..... UOC:TTT,UUU	4
* 4	PAOZZ	5310011191024	24617	2436162	.WASHER,FLAT 5/16..... UOC:TTT,UUU	6
* 5	PAOZZ	5305000712514	80204	B1821BH025C275N	.SCREW,CAP,HEXAGON H 1/4-20 X 2.75. UOC:TTT,UUU	4
* 6	PAOZZ	5306002264829	80204	B1821BH031C125N	.BOLT,MACHINE 5/16-18 X 1.25..... UOC:TTT,UUU	4
* 7	PAOZZ	5310008140673	96906	MS51943-33	.NUT,SELF-LOCKING 1/4-20..... UOC:TTT,UUU	4
* 8	PAOZZ	5310002416658	81349	M45913/3-5FG8C	.NUT,SELF-LOCKING 5/16-18..... UOC:TTT,UUU	4
* 9	PAOZZ	5320014399728	6W728	4397081-011	.RIVET,BLIND 1/4 X .810..... UOC:TTT,UUU	30
* 10	PAOZZ	2510014360773	6W728	4660928	.HINGE,DOOR,VEHI L.H..... UOC:TTT,UUU	2
* 10	PAOZZ	2510014360772	6W728	4660943	.HINGE,DOOR VEHI R.H..... UOC:TTT,UUU	2
* 11	PAOZZ	5310013344710	80205	MS35338-46	.WASHER,LOCK 3/8..... UOC:TTT,UUU	10
* 12	PAOZZ	5305007813928	80204	B1821BH038C400N	.SCREW,CAP,HEXAGON H 3/8-16 X 4.00. UOC:TTT,UUU	18
* 13	PAOZZ		6W728	6432584-200M1	.COVER STRIP,HINGE FRONT,TAN..... UOC:TTT,UUU	2
* 13	PAOZZ		6W728	6432431-200M1	.COVER STRIP,HINGE REAR,TAN..... UOC:TTT,UUU	2
* 14	PAOZZ	5325014608350	19207	12446871-10	.INSERT,SCREW THRREAD..... UOC:TTT,UUU	2
* 15	PAOZZ	5306002264826	80204	B1821BH031C088N	.SCREW,CAP,HEXAGON H 5/16-18 X 7/8 UOC:TTT,UUU	2
* 16	PAOZZ	5310004079566	80205	MS35338-45	.WASHER,LOCK 5/16..... UOC:TTT,UUU	2

END OF FIGURE

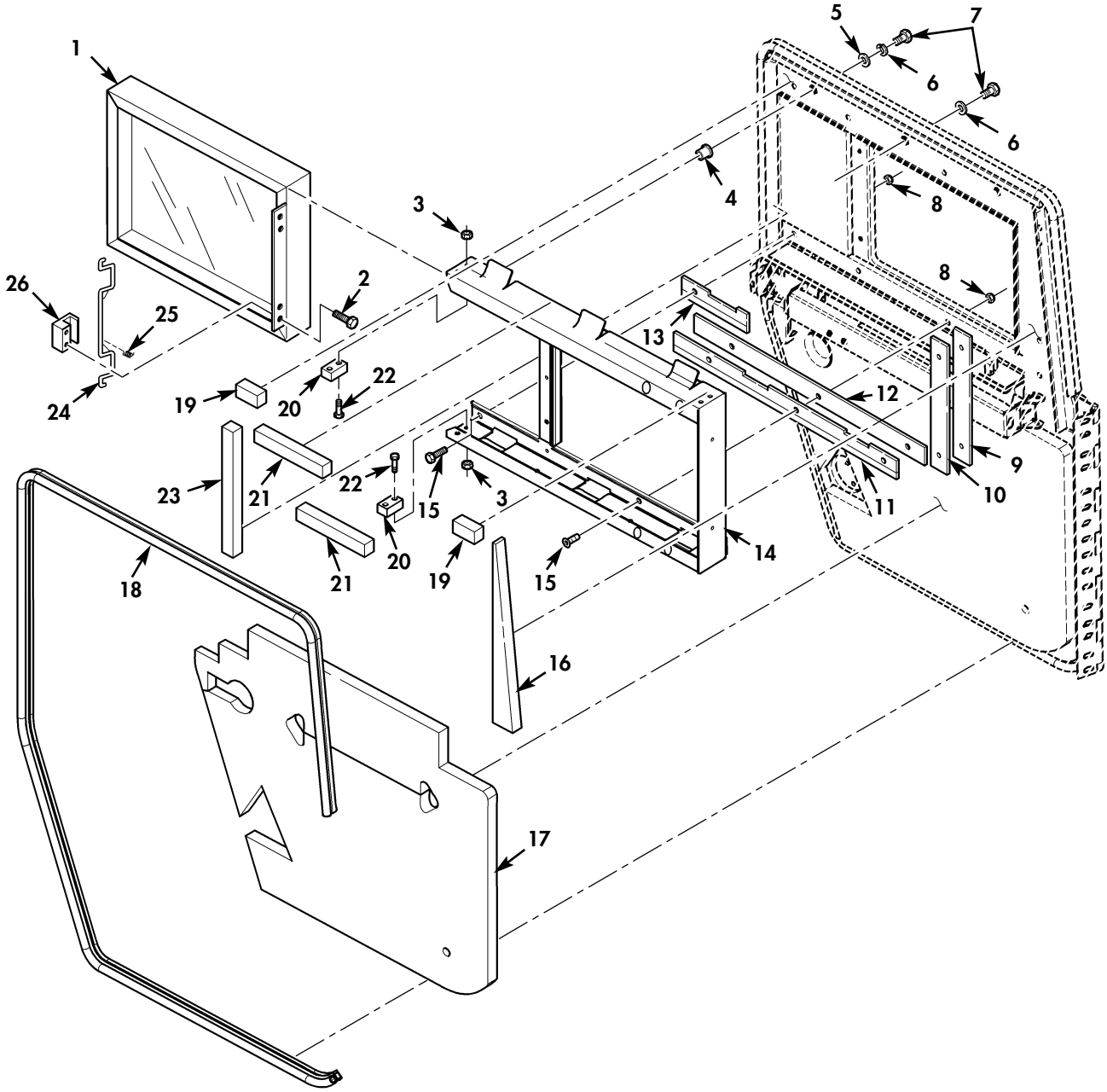

Figure 167D. Ballistic Door Assembly Window and Insulation.

(1) ITEM NO	(2) SMR CODE	(3) NSN	(4) CAGEC	(5) PART NUMBER	(6) DESCRIPTION AND USABLE ON CODES(UOC)	(7) QTY
					GROUP 1801 BODY,CAB,HOOD,AND HULL ASSEMBLY	
					FIG. 167D BALLISTIC DOOR ASSEMBLY, WINDOW AND INSULATION	
* 1	PAOZZ		6W728	6432256-01M1	WINDOW,VEHICULAR..... UOC:TTT	4
* 2	PAOZZ	5305014339258	6W728	4397008-072	SCREW,MACHINE..... UOC:TTT	16
* 3	PAOZZ	5310014398173	6W728	4397064-001	NUT,SELF-LOCKING..... UOC:TTT	52
* 4	PAOZZ	5310014212135	6W728	4397050-025	INSERT,SCREW THRREAD 1/4-20..... UOC:TTT	32
* 5	PAOZZ	5310014192413	6W728	4397005-014	WASHER,FLAT 3/8..... UOC:TTT	16
* 6	PAOZZ	5310014177273	6W728	4397004-008	WASHER,LOCK..... UOC:TTT	24
* 7	PAOZZ	5305014366377	6W728	4397000-064	SCREW,CAP,HEXAGON H 3/8-16 X 1.50.. UOC:TTT	16
* 8	PAOZZ	5310008140673	96906	MS51943-33	NUT,SELF-LOCKING 1/4-20..... UOC:TTT	16
* 9	PAOZZ		6W728	6432698-200M1	SPACER WINDOW CHANNEL,VERTICLE..... UOC:TTT	8
* 10	PAOZZ	5330015248863	6W728	4660617-000	RETAINER,SEAL..... UOC:TTT	8
* 11	PAOZZ		6W728	6432589-01M1	RETAINER,SEAL..... UOC:TTT	4
* 12	PAOZZ		6W728	6432699-200M1	SPACER,WINDOW CHANNEL,VERTICLE..... UOC:TTT	8
* 13	PAOZZ		6W728	6432590-0M1M	RETAINER,SEAL..... UOC:TTT	8
* 14	PAOZZ		6W728	6432265-01M1	CHANNEL ASSEMBLY,WIN..... UOC:TTT	4
* 15	PAOZZ		6W728	4397031-090	SCREW,CAP,SOCKET HE COUNTER SUNK... UOC:TTT	48
* 16	PAOZZ		6W728	6432732-01M1	INSULATION,THERMAL UPPER..... UOC:TTT	4
* 17	PAOZZ		6W728	6432731-01M1	INSULATION,THERMAL LOWER..... UOC:TTT	4
* 18	PAOZZ		34623	6022913	SEAL,NONMETALLIC SP REAR DOORS,9FT, 9 INCHES LONG..... UOC:TTT	2
* 18	PAOZZ		34623	6022912	SEAL,NONMETALLIC SP FRONT DOORS,9 FT,6 INCHES LONG..... UOC:TTT	2
* 19	PAOZZ		6W728	6432733-01M1	INSULATION,THERMAL UPPER..... UOC:TTT	8
* 20	PAOZZ		6W728	4668947-001	BUMPER,NONMETALLIC..... UOC:TTT	8
* 21	PAOZZ		6W728	6432733-02M1	INSULATION,THERMAL UPPER..... UOC:TTT	8

(1) ITEM NO	(2) SMR CODE	(3) NSN	(4) CAGEC	(5) PART NUMBER	(6) DESCRIPTION AND USABLE ON CODES(UOC)	(7) QTY
* 22	PAOZZ	5305014347258	6W728	4397015-030	SCREW,CAP,SOCKET HE..... UOC:TTT	16
* 23	PAOZZ		6W728	6432733-03M1	INSULATION,THERMAL UPPER..... UOC:TTT	8
* 24	PAOZZ		6W728	4660608-001	ROD,LOCKING WINDOW..... UOC:TTT	4
* 25	PAOZZ	5360014749653	56988	S731	SPRING,HELICAL COMP..... UOC:TTT	4
* 26	PAOZZ		6W728	4668633-002	PLATE,RETAINING WINDOW LOCK..... UOC:TTT	8

END OF FIGURE

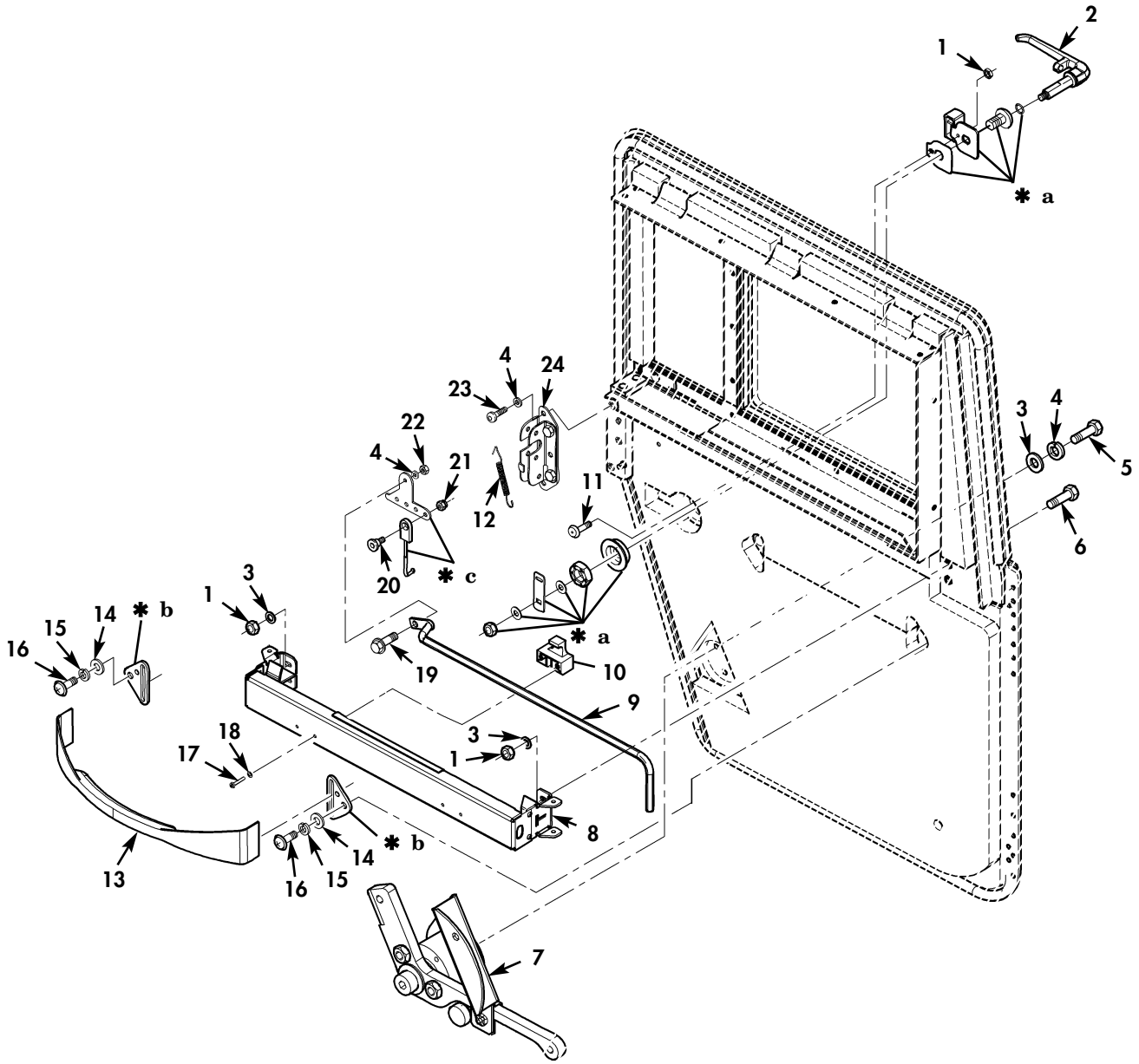

✱ **a** PART OF ITEM 2
✱ **b** PART OF ITEM 13
✱ **c** PART OF ITEM 24

Figure 167E. Ballistic Door Assembly Combat Lock, Handle, and Latch.

(1) ITEM NO	(2) SMR CODE	(3) NSN	(4) CAGEC	(5) PART NUMBER	(6) DESCRIPTION AND USABLE ON CODES(UOC)	(7) QTY
					GROUP 1801 BODY,CAB,HOOD,AND HULL ASSEMBLY	
					FIG. 167E BALLISTIC DOOR ASSEMBLY, COMBAT LOCK,HANDLE,AND LATCH	
* 1	PAOZZ	5310014398173	6W728	4397064-001	NUT,SELF-LOCKING 1/4-20..... UOC:TTT	4
* 2	PAOZZ	2540014179362	6W728	4660310-002	HANDLE,DOOR.VEHICU R.H.,TAN..... UOC:TTT	2
* 2	PAOZZ	2540014190486	6W728	4660311-002	HANDLE,DOOR,VEHICU L.H.,TAN..... UOC:TTT	2
* 3	PAOZZ	5310014357784	6W728	4397005-010	WASHER,FLAT..... UOC:TTT	24
* 4	PAOZZ	5310014330941	6W728	4397004-006	WASHER,LOCK..... UOC:TTT	8
* 5	PAOZZ	5306014339180	6W728	4397000-005	BOLT,MACHINE 1/4-20 X 5/8..... UOC:TTT	8
* 6	PAOZZ	5305014206635	6W728	4397000-012	SCREW,CAP,HEXAGON H 1/4-20 X 1.50.. UOC:TTT	16
* 7	PAOZZ		6W728	6431262	LOCK ASSEMBLY,COMBA L.H..... UOC:TTT	2
* 7	PAOZZ		6W728	6431267	LOCK ASSEMBLY,COMBA R.H..... UOC:TTT	2
* 8	PAOZZ	2540011995812	34623	12339454-1	LATCH,DOOR,VEHICLE L.H.,FRONT..... UOC:TTT	1
* 8	PAOZZ	5340011987580	34623	5584259	BRACKET,MOUNTING R.H.,FRONT..... UOC:TTT	1
* 8	PAOZZ	5340011976714	34623	5584260	BRACKET,LATCH ASSEM L.H.,REAR..... UOC:TTT	1
* 8	PAOZZ	2540011987581	19207	12339387-2	LATCH,DOOR,VEHICU R.H.,REAR..... UOC:TTT	1
* 9	PAOZZ	3040012001015	19207	12339452-1	LEVER,REMOTE CONT L.H,FRONT..... UOC:TTT	1
* 9	PAOZZ		19207	12339452-2	LEVER R.H.,FRONT..... UOC:TTT	1
* 9	PAOZZ	3040011954173	34623	12339451-1	LEVER,REMOTE,CONT L.H..... UOC:TTT	1
* 9	PAOZZ	3040011961493	34623	12339451-2	LEVER,REMOTE,CONT R.H..... UOC:TTT	1
* 10	PAOZZ	2510011991499	19207	12339450	GUIDE,DOOR LATCH..... UOC:TTT	4
* 11	PAOZZ		6W728	1000349-000	SCREW,SHOULDER..... UOC:TTT	4
* 12	PAOZZ	5360014456259	6W728	2-300-9	SPRING,HELICAL,COMP..... UOC:TTT	4
* 13	PAOZZ		19207	12485221	HANDLE,ASSEMBLY..... UOC:TTT	4
* 14	PAOZZ	5310014229287	6W728	4397005-012	WASHER,FLAT 5/16..... UOC:TTT	8
* 15	PAOZZ	5310014179942	6W728	4397004-007	WASHER,LOCK 5/16..... UOC:TTT	8
* 16	PAOZZ	5305014307406	6W728	4397018-074	SCREW,CAP,SOCKET HE.....	8

(1) ITEM NO	(2) SMR CODE	(3) NSN	(4) CAGEC	(5) PART NUMBER	(6) DESCRIPTION AND USABLE ON CODES(UOC)	(7) QTY
					UOC:TTT	
* 17	PAOZZ	5305004324205	80205	MS51861-49	SCREW,TAPPING #10.....	16
					UOC:TTT	
* 18	PAOZZ	5310012538953	34623	5593242	WASHER,FLAT #10.....	16
					UOC:TTT	
* 19	PAOZZ	5306014365429	6W728	4397051-037	SCREW,MACHINE 1/4-20 X 1/2.....	4
					UOC:TTT	
* 20	PAOZZ		6W728	4397060-001	SCREW,SHOULDER.....	4
					UOC:TTT	
* 21	PAOZZ	5340015134903	6W728	4397020-023	NUT,SELF-LOCKING #10-32.....	4
					UOC:TTT	
* 22	PAOZZ	5310014192413	6W728	4397005-014	WASHER,FLAT.....	4
					UOC:TTT	
* 23	PAOZZ		6W728	4397018-030	SCREW,MACHINE.....	16
					UOC:TTT	
* 24	PAOZZ	2540011974900	19220	9-300-U-L	LATCH,DOOR,VEHICULA L.H.....	2
					UOC:TTT	
* 24	PAOZZ	2540011965317	19220	9-300-U-R	LATCH,DOOR,VEHICULA R.H.....	2
					UOC:TTT	

END OF FIGURE

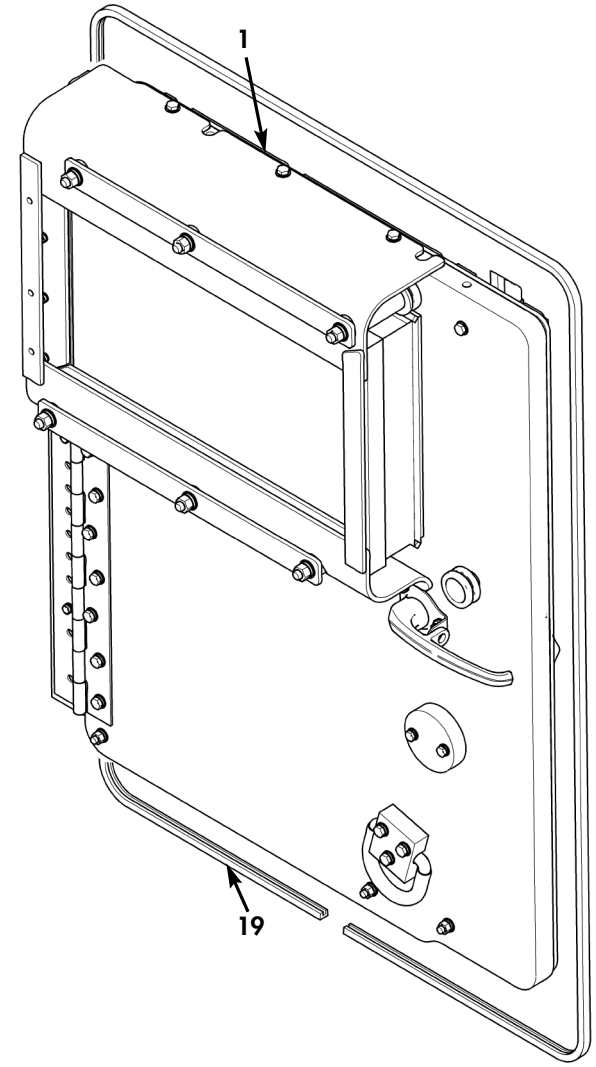

FRONT DOOR

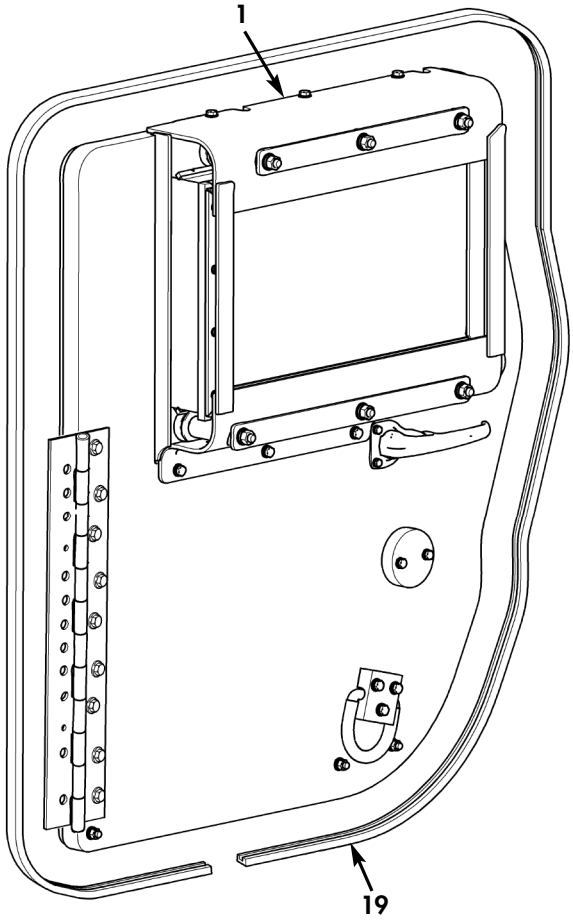

REAR DOOR

Figure 167F. Frag 5 Door and Window Assembly (M1151A1, M1152A1, M1165A1, M1167) (Sheet 1 of 2).

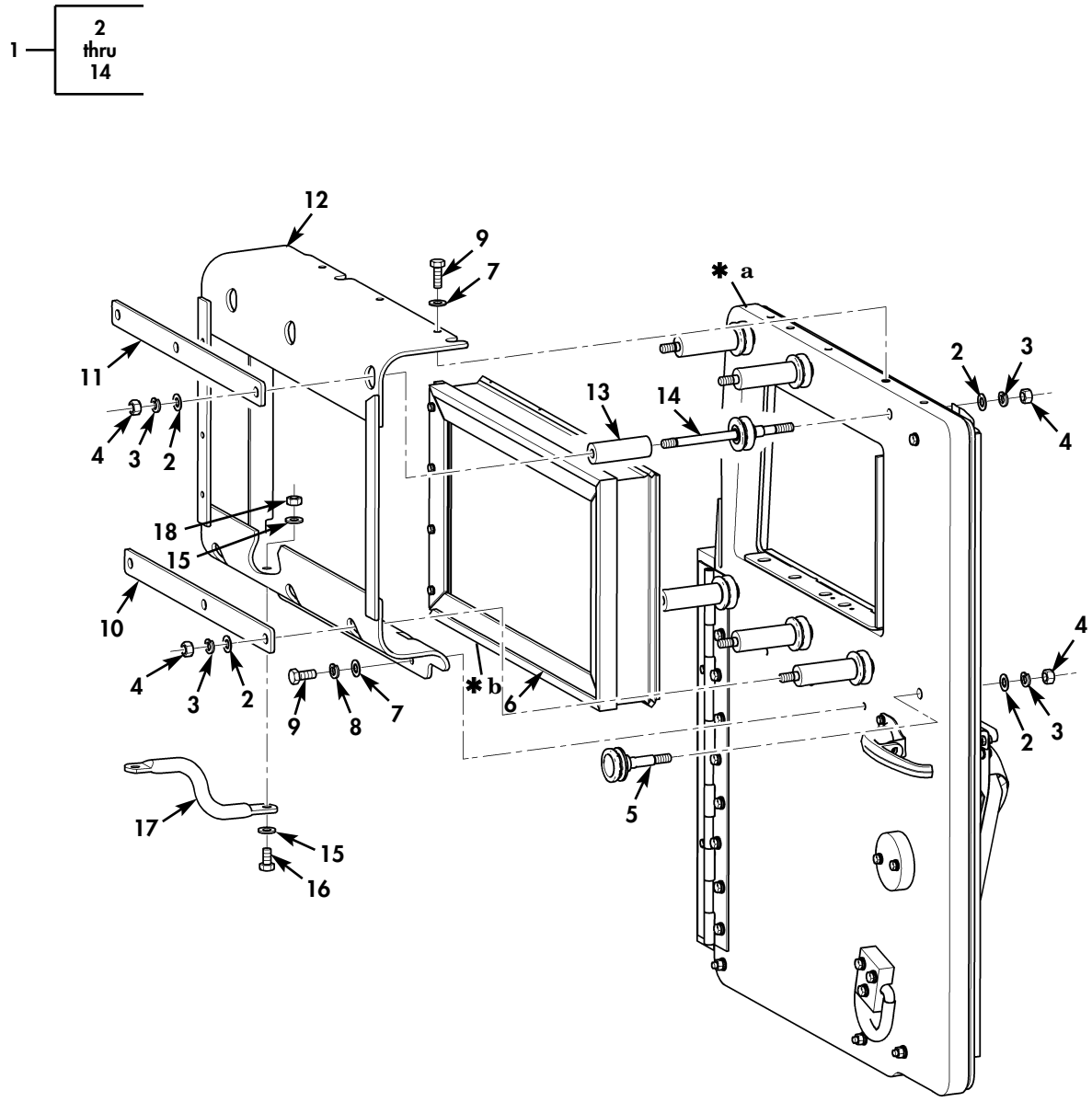

FRONT DOOR SHOWN, REAR DOOR BREAKDOWN PARTS SAME

✱ QUANTITY SHOWN REFLECTS ONE DOOR

✱ **a** PART OF ITEM 1; FOR BREAKDOWN SEE FIGURES 167G THRU 167J

✱ **b** FOR BREAKDOWN SEE FIGURE 167K

Figure 167F. Frag 5 Door and Window Assembly (M1151A1, M1152A1, M1165A1, M1167) (Sheet 2 of 2).

(1) ITEM NO	(2) SMR CODE	(3) NSN	(4) CAGEC	(5) PART NUMBER	(6) DESCRIPTION AND USABLE ON CODES(UOC)	(7) QTY
					GROUP 1801 BODY,CAB,HOOD,AND HULL ASSEMBLY	
					FIG. 167F FRAG 5 DOOR AND WINDOW ASSEMBLY (M1151A1,M1152A1, M1165A1,M1167)	
* 1	PAOOF	2510015455887	34623	6030574	DOOR,VEHICULAR R.H.,FRONT..... UOC:TTA,TT1,UU2	1
* 1	PAOOF	2510015455890	34623	6030573	DOOR,VEHICULAR L.H.,FRONT..... UOC:TTA,TT1,UU2	1
* 1	PAOOF	2510015455891	34623	6030575	DOOR,VEHICULAR L.H.,REAR..... UOC:TTA,TT1,UU2	1
* 1	PAOOF	2510015455893	34623	6030576	DOOR,VEHICULAR R.H.,REAR..... UOC:TTA,TT1,UU2	1
1	PAOOF	2510015538748	34623	6031562	DOOR,VEHICULAR L.H..... UOC:UUA	1
1	PAOOF	2510015555347	34623	6031563	DOOR,VEHICULAR R.H..... UOC:UUA	1
* 2	PAOZZ	5310011211703	24617	2436165	.WASHER,FLAT 1/2..... UOC:TTA,TT1,UUA,UU2	13
* 3	PAOZZ	5310005845272	80205	MS35338-48	.WASHER,LOCK 1/2..... UOC:TTA,TT1,UUA,UU2	13
* 4	PAOZZ	5310014654525	24617	9418753	.NUT,PLAIN,HEXAGON 1/2-13..... UOC:TTA,TT1,UUA,UU2	13
* 5	PAOZZ	3110015635247	34623	6030613	.BEARING,ROLLER,TRAC..... UOC:TTA,TT1,UUA,UU2	1
* 6	PAOOF	2510015455898	34623	6030594	.WINDOW ASSEMBLY L.H,FRONT OR REAR. UOC:TTA,TT1,UUA,UU2	1
* 6	PAOOF	2510015455899	34623	6030595	.WINDOW ASSEMBLY R.H,FRONT OR REAR. UOC:TTA,TT1,UUA,UU2	1
* 7	PAOZZ	5310014124013	24617	2436163	.WASHER,FLAT 3/8..... UOC:TTA,TT1,UUA,UU2	6
* 8	PAOZZ	5310006379541	65035	P49866-11	.WASHER,LOCK 3/8..... UOC:TTA,TT1,UUA,UU2	3
* 9	PAOZZ	5305000680511	80204	B1821BH038C125N	.SCREW,CAP,HEXAGON H 3/8-16 X 1.25. UOC:TTA,TT1,UUA,UU2	6
* 10	PAOZZ	5340015633732	34623	6031768	.PLATE,RETAINING WIN LOWER,FRONT OR REAR..... UOC:TTA,TT1,UUA,UU2	1
* 11	PAOZZ	2590015635174	34623	6031761	.PLATE,RETAINING WIN UPPER,FRONT... UOC:TTA,TT1,UUA,UU2	1
* 11	PAOZZ	5340015633420	34623	6031765	.PLATE,RETAINING WIN UPPER,REAR.... UOC:TTA,TT1,UU2	1
* 12	PAOZZ	2510015642280	34623	6031739	.COVER,VEHICLE WINDO L.H.,FRONT.... UOC:TTA,TT1,UUA,UU2	1
* 12	PAOZZ	2510015634855	34623	6031750	.COVER,VEHICLE WINDO R.H.,FRONT.... UOC:TTA,TT1,UUA,UU2	1
* 12	PAOZZ		34623	6031753	.COVER,VEHICLE,WINDO L.H.,REAR..... UOC:TTA,TT1,UU2	1
* 12	PAOZZ	2510015634439	34623	6031756	.COVER,VEHICLE,WINDO R.H.,REAR..... UOC:TTA,TT1,UU2	1
* 13	PAOZZ	5365015633730	34623	6031766	.SPACER,SLEEVE..... UOC:TTA,TT1,UUA,UU2	6

(1) ITEM NO	(2) SMR CODE	(3) NSN	(4) CAGEC	(5) PART NUMBER	(6) DESCRIPTION AND USABLE ON CODES(UOC)	(7) QTY
* 14	PAOZZ	3110015646162	34623	6031767	.BEARING,ROLLER,TRAC..... UOC:TTA,TT1,UUA,UU2	6
* 15	PAOZZ	5310011191024	24617	2436162	WASHER,FLAT 5/16..... UOC:TTA,TT1,UUA,UU2	2
* 16	PAOZZ	5306002264829	80204	B1821BH031C125N	BOLT,MACHINE 5/16-18 X 1.25..... UOC:TTA,TT1,UUA,UU2	1
* 17	PAOZZ	5340015547879	34623	6030907	BRACKET,DOUBLE ANGL L.H. MIRROR ONLY UOC:TTA,TT1,UUA,UU2	1
* 18	PAOZZ	5310008140673	96906	MS51943-33	NUT,SELF LOCKING,HE 5/16-18..... UOC:TTA,TT1,UUA,UU2	1
* 19	PAOZZ	5330015548341	34623	6033488	SEAL,NONMETALLIC L.H. OR R.H.,FRONT AND REAR..... UOC:TTA,TT1,UU2	2
* 19	PAOZZ	5330015548341	34623	6033488	SEAL,NONMETALLIC L.H. OR R.H.,FRONT. UOC:UUA	1

END OF FIGURE

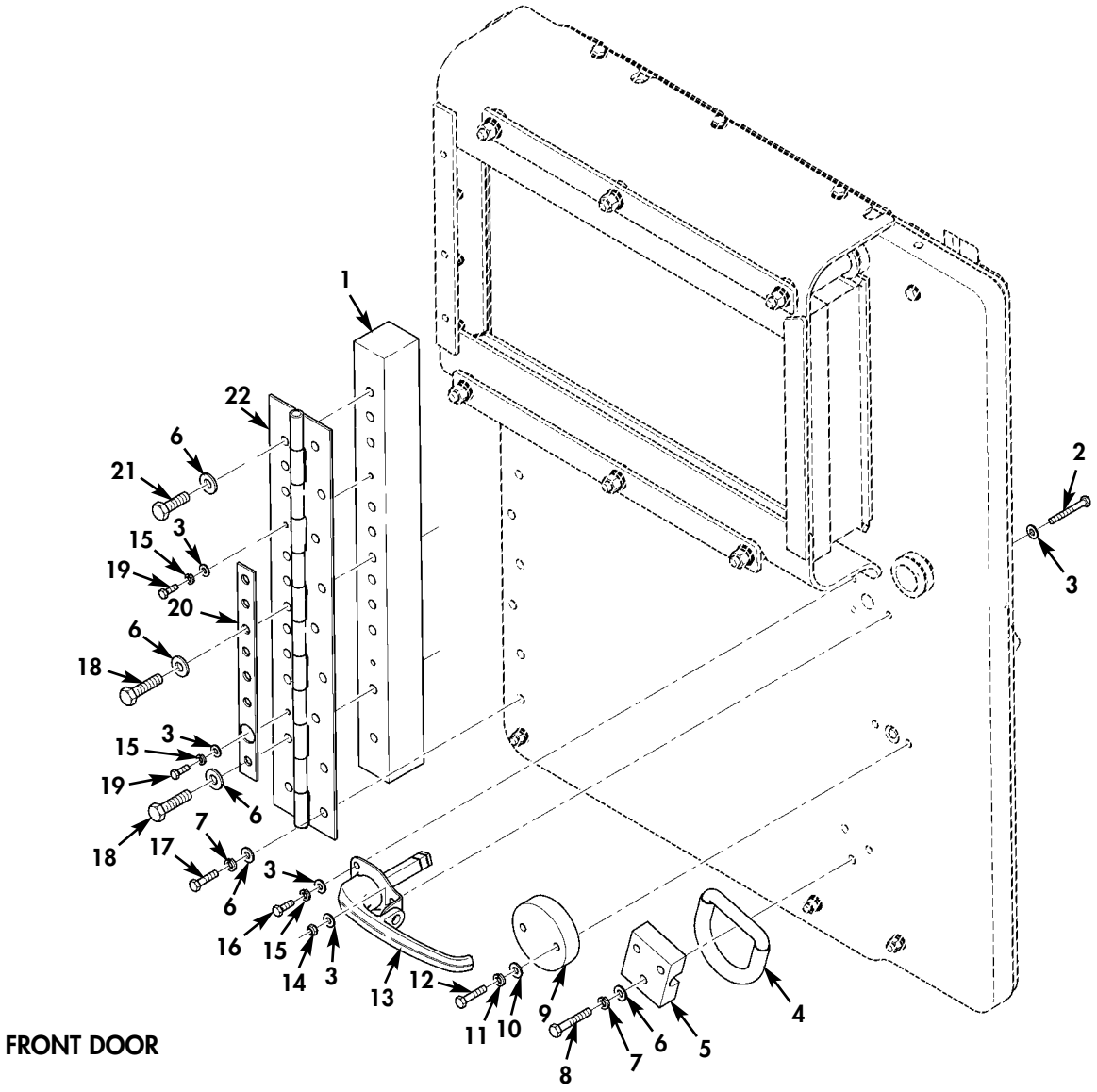

✱ QUANTITY SHOWN
REFLECTS ONE DOOR

Figure 167G. Frag 5 Door, Hinge, Handle, and D-ring (Sheet 1 of 2).

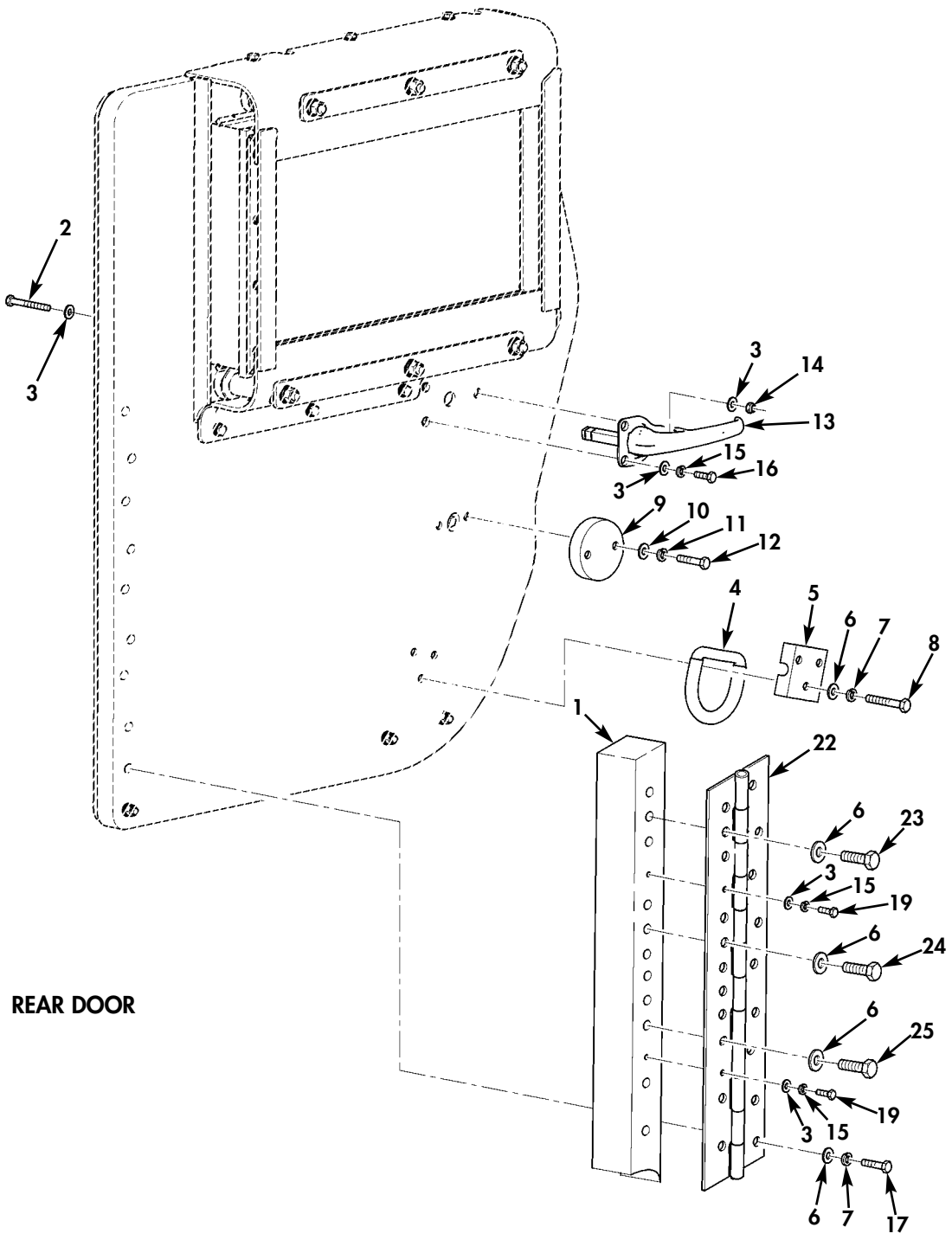

✱ QUANTITY SHOWN
REFLECTS ONE DOOR

Figure 167G. Frag 5 Door, Hinge, Handle, and D-ring (Sheet 2 of 2).

(1) ITEM NO	(2) SMR CODE	(3) NSN	(4) CAGEC	(5) PART NUMBER	(6) DESCRIPTION AND USABLE ON CODES(UOC)	(7) QTY
					GROUP 1801 BODY,CAB,HOOD,AND HULL ASSEMBLY	
					FIG. 167G FRAG 5 DOOR,HINGE,HANDLE, AND D-RING	
* 1	PAOZZ		34623	6030241	BRACKET,MOUNTING L.H. OR R.H.,REAR.. UOC:TTA,UU2	1
* 1	PAOZZ		34623	6030239	BRACKET,MOUNTING L.H. OR R.H.,FRONT. UOC:TTA,UUA,UU2	1
* 2	PAOZZ	5305000712513	80204	B1821BH025C250N	SCREW,CAP,HEXAGON H 1/4-20 X 2.50... UOC:TTA,UUA,UU2	1
* 3	PAOZZ	5310011023270	24617	2436161	WASHER,FLAT 1/4..... UOC:TTA,UUA,UU2	6
* 4	PAOZZ		18876	PIF04511	HANDLE,BOW CREW EXTRACTION..... UOC:TTA,UUA,UU2	1
* 5	PAOZZ		18876	PIF04510	BRACKET,VEHICULAR C..... UOC:TTA,UUA,UU2	1
* 6	PAOZZ	5310011300517	24617	2436163	WASHER,FLAT 3/8..... UOC:TTA,UUA,UU2	21
* 7	PAOZZ	5310006379541	65035	P49866-11	WASHER,LOCK 3/8..... UOC:TTA,UUA,UU2	12
* 8	PAOZZ	5305007813927	80204	B1821BH038C350N	SCREW,CAP,HEXAGON H 3/8-16 X 3.50... UOC:TTA,UUA,UU2	3
* 9	PAOZZ		34623	6029110	PLATE,COVER ACCESS..... UOC:TTA,UUA,UU2	1
* 10	PAOZZ	5310011191024	24617	2436162	WASHER,FLAT 5/16..... UOC:TTA,UUA,UU2	2
* 11	PAOZZ	5310004079566	80205	MS35338-45	WASHER,LOCK 5/16..... UOC:TTA,UUA,UU2	2
* 12	PAOZZ	5305002264831	80204	B1821BH031C150N	SCREW,CAP,HEXAGON H 5/16-18 X 1.50.. UOC:TTA,UUA,UU2	2
* 13	PAOZZ		19220	7-5624-52-DG	LATCH,DOOR,VEHICULA..... UOC:TTA,UUA,UU2	1
* 14	PAOZZ	5310000614650	81349	M45913/3-4CG8C	NUT,SELF-LOCKING,HE 1/4-20..... UOC:TTA,UUA,UU2	1
* 15	PAOZZ	5310005825965	80205	MS35338-44	WASHER,LOCK 1/4..... UOC:TTA,UUA,UU2	4
* 16	PAOZZ	5305000680508	80204	B1821BH025C075N	SCREW,CAP,HEXAGON H 1/4-20 X 3/4.... UOC:TTA,UUA,UU2	2
* 17	PAOZZ	5305000680511	80204	B1821BH038C125N	SCREW,CAP,HEXAGON H 3/8-16 X 1.25... UOC:TTA,UUA,UU2	9
* 18	PAOZZ	5305014753158	80204	B1821BH038C650N	SCREW,CAP,HEXAGON H 3/8-16 X 6.50... UOC:TTA,UUA,UU2	6
* 19	PAOZZ	5305002253843	80204	B1821BH025C100N	SCREW,CAP,HEXAGON H 1/4-20 X 1.00, L.H. OR R.H..... UOC:TTA,UUA,UU2	2
* 20	PAOZZ	5365015546619	34623	6032279	SPACER PLATE..... UOC:TTA,UUA,UU2	1
* 21	PAOZZ	5305015546172	34623	6032293	SCREW,CAP,HEXAGON H 3/8-16 X 7.00, L.H. OR R.H.,FRONT..... UOC:TTA,UUA,UU2	3

(1) ITEM NO	(2) SMR CODE	(3) NSN	(4) CAGEC	(5) PART NUMBER	(6) DESCRIPTION AND USABLE ON CODES(UOC)	(7) QTY
* 22	PAOZZ		34623	6029072	HINGE,DOOR,VEHICULA R.H.,FRONT OR REAR..... UOC:TTA,UU2	1
* 22	PAOZZ		34623	6029071	HINGE,DOOR,VEHICULA L.H.,FRONT OR REAR..... UOC:TTA,UU2	1
* 22	PAOZZ		34623	6029072	HINGE,DOOR,VEHICULA R.H.,FRONT..... UOC:UUA	1
* 22	PAOZZ		34623	6029071	HINGE,DOOR,VEHICULA L.H. FRONT..... UOC:UUA	1
* 23	PAOZZ	5305014581670	80204	B1821BH038C550N	SCREW,CAP,HEXAGON H 3/8-16 X 5.50,L.H. OR R.H.,REAR..... UOC:TTA,UU2	4
* 24	PAOZZ	5305009640503	80204	B1821BH038C500N	SCREW,CAP,HEXAGON H 3/8-16 X 5.00 L.H. OR R.H.,REAR..... UOC:TTA,UU2	2
* 25	PAOZZ	5305007813928	80204	B1821BH038C400N	SCREW,CAP,HEXAGON H 3/8-16 X 4.00 L.H. OR R.H.,REAR..... UOC:TTA,UU2	3

END OF FIGURE

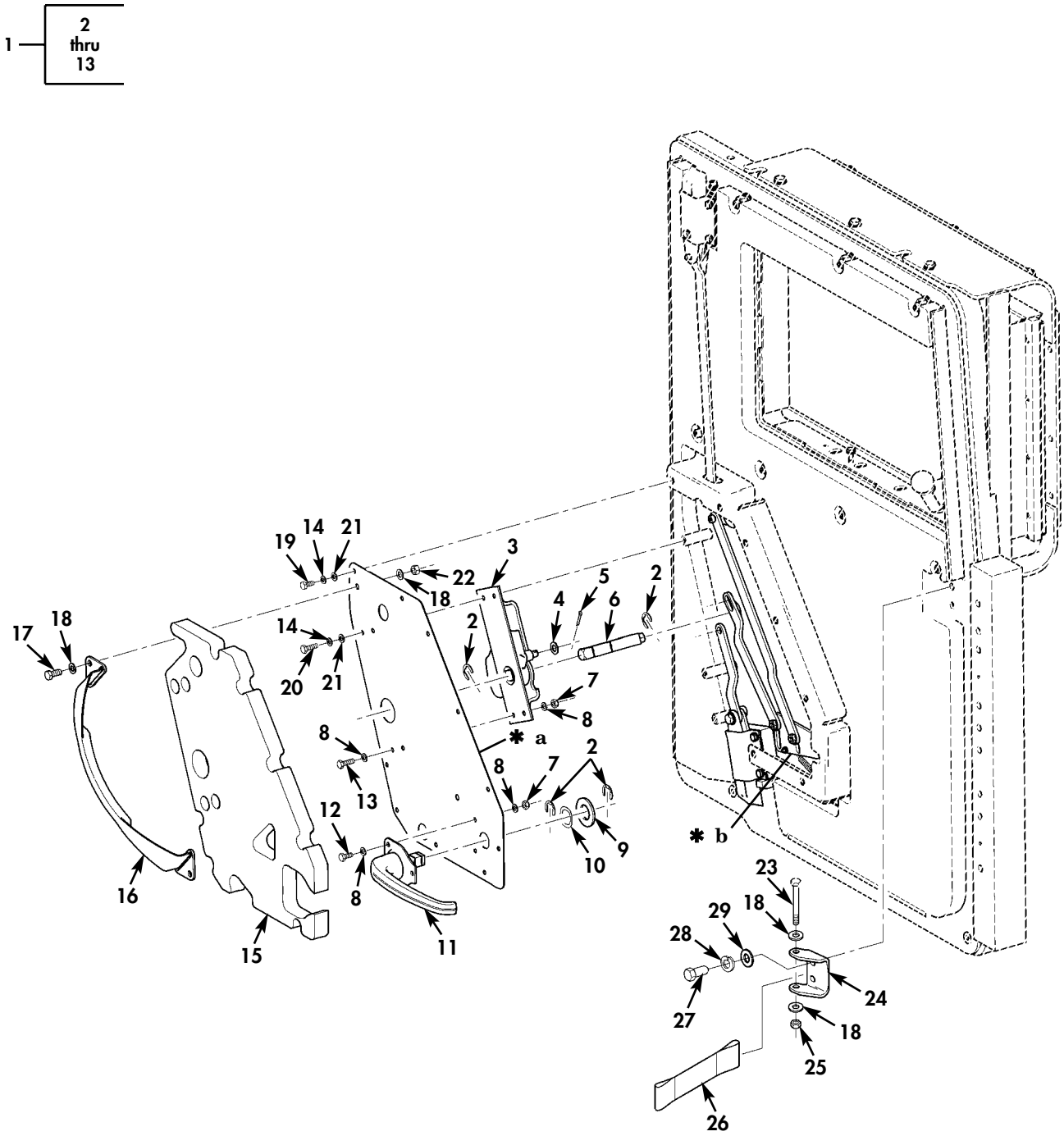

✱ QUANTITY SHOWN
REFLECTS ONE DOOR

✱ **a** PART OF ITEM 1

✱ **b** FOR BREAKDOWN SEE FIGURE 167I

Figure 167H. Frag 5 Door Combat Latch, Safety Strap, and Related Hardware (Sheet 1 of 2).

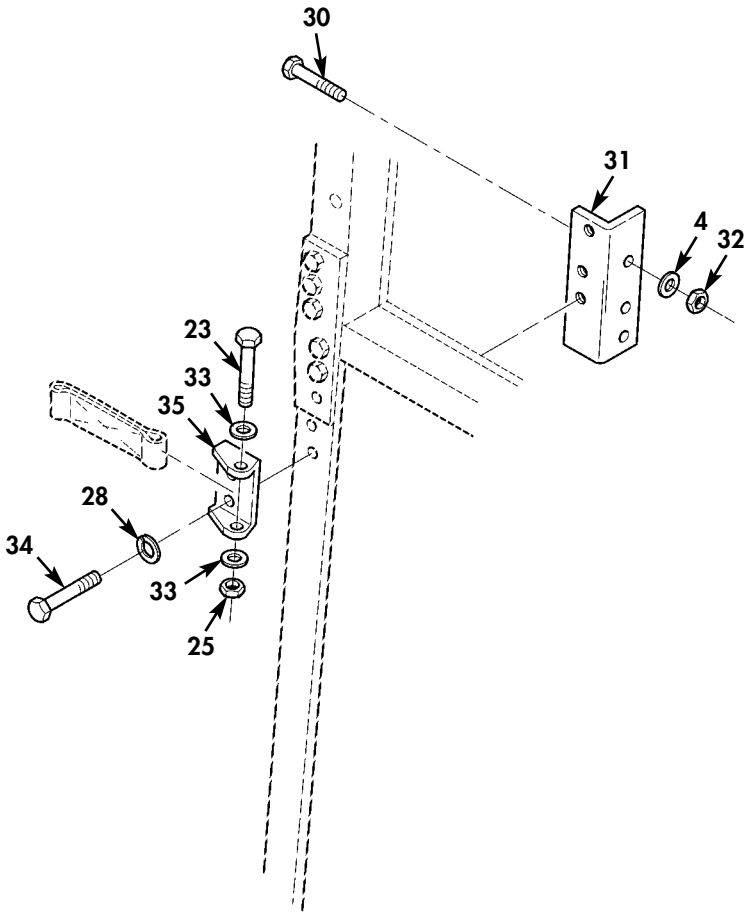

Figure 167H. Frag 5 Door Combat Latch, Safety Strap, and Related Hardware (Sheet 2 of 2).

(1) ITEM NO	(2) SMR CODE	(3) NSN	(4) CAGEC	(5) PART NUMBER	(6) DESCRIPTION AND USABLE ON CODES(UOC)	(7) QTY
					GROUP 1801 BODY,CAB,HOOD,AND HULL ASSEMBLY	
					FIG. 167H FRAG 5 DOOR COMBAT LATCH, SAFETY STRAP,AND RELATED HARDWARE	
* 1	PAOOO		34623	6031729	DOOR,LOCK,HANDLE L.H..... UOC:UUA	1
* 1	PAOOO		34623	6031730	DOOR,LOCK,HANDLE R.H..... UOC:UUA	1
* 1	PAOOO		34623	6031729	DOOR,LOCK,HANDLE L.H., FRONT OR REAR UOC:TTA,UU2	1
* 1	PAOOO		34623	6031730	DOOR,LOCK,HANDLE R.H., FRONT OR REAR UOC:TTA,UU2	1
* 2	PAOZZ		34623	6029328	.RING,SNAP..... UOC:TTA,UUA,UU2	4
* 3	PAOZZ		34623	6035375	.LATCH,DOOR,VEHICULA..... UOC:TTA,UUA,UU2	1
* 4	PAOZZ	5310011300517	24617	2436163	.WASHER,FLAT 3/8..... UOC:TTA,UUA,UU2	2
* 5	PAOZZ	5315008395821	80205	MS24665-351	.PIN,COTTER 1/8 X 3/4..... UOC:TTA,UUA,UU2	2
* 6	PAOZZ		34623	6031733	.SHAFT,SHOULDERED..... UOC:TTA,UUA,UU2	1
* 7	PAOZZ	5310000614650	81349	M45913/3-4CG8C	.NUT,SELF-LOCKING,HE 1/4-20..... UOC:TTA,UUA,UU2	6
* 8	PAOZZ	5310011023270	24617	2436161	.WASHER,FLAT 1/4..... UOC:TTA,UUA,UU2	12
* 9	PAOZZ		34623	6030659	.SPACER,PLATE 1.75 DIA..... UOC:TTA,UUA,UU2	1
* 10	PAOZZ	5310007716722	77820	10-40704-28	.WASHER,SPRING TENSI 0.948 I.D..... UOC:TTA,UUA,UU2	1
* 11	PAOZZ		19220	6-5624-52	.HANDLE,DOOR,VEHICUL INNER..... UOC:TTA,UUA,UU2	1
* 12	PAOZZ	5305000687837	80204	B1821BH025C063N	.SCREW,CAP,HEXAGON H 1/4-20 X 5/8... UOC:TTA,UUA,UU2	3
* 13	PAOZZ	5305000712505	80204	B1821BH025C088N	.SCREW,CAP,HEXAGON H 1/4-20 X 7/8... UOC:TTA,UUA,UU2	3
* 14	PAOZZ	5310005825965	80205	MS35338-44	WASHER,LOCK 1/4..... UOC:TTA,UUA,UU2	8
* 15	PAOZZ		34623	6031467	INSULATION,THERMAL L.H..... UOC:TTA,UUA,UU2	1
* 15	PAOZZ		34623	6031468	INSULATION,THERMAL R.H..... UOC:TTA,UUA,UU2	1
* 16	PAOZZ	2540015457418	19207	12485221	LATCH,DOOR,VEHICULA..... UOC:TTA,UUA,UU2	1
* 17	PAOZZ	5306002264825	80204	B1821BH031C075N	BOLT,MACHINE 5/16-18 X 3/4..... UOC:TTA,UUA,UU2	2
* 18	PAOZZ	5310011191024	24617	2436162	WASHER,FLAT 5/16..... UOC:TTA,UUA,UU2	6
* 19	PAOZZ	5305000687837	80204	B1821BH025C063N	SCREW,CAP,HEXAGON H 1/4-20 X 5/8.... UOC:TTA,UUA,UU2	7
* 20	PAOZZ	5305000712505	80204	B1821BH025C088N	SCREW,CAP,HEXAGON H 1/4-20 X 7/8.... UOC:TTA,UUA,UU2	1

(1) ITEM NO	(2) SMR CODE	(3) NSN	(4) CAGEC	(5) PART NUMBER	(6) DESCRIPTION AND USABLE ON CODES(UOC)	(7) QTY
* 21	PAOZZ	5310011023270	24617	2436161	WASHER,FLAT 1/4..... UOC:TTA,UUA,UU2	8
* 22	PAOZZ	5310009318167	96906	MS51967-6	NUT,PLAIN,HEXAGON 5/16-18..... UOC:TTA,UUA,UU2	2
* 23	PAOZZ	5306002264838	80204	B1821BH031C325N	BOLT,MACHINE 5/16-18 X 3.25..... UOC:TTA,UU2	1
* 24	PAOZZ	5340015546671	34623	6030874	BRACKET,DOUBLE ANGL..... UOC:TTA,UU2	1
* 25	PAOZZ	5310008140673	81349	M45913/3-5CG8C	NUT,SELF-LOCKING,HE 5/16-18..... UOC:TTA,UU2	1
* 26	PAOZZ	5340015548280	34623	6032122	STRAP,WEBBING..... UOC:TTA,UUA,UU2	1
* 27	PAOZZ	5306002264826	80204	B1821BH031C088N	BOLT,MACHINE 5/16-18 X 7/8..... UOC:TTA,UU2	2
* 28	PAOZZ	5310004079566	80205	MS35338-45	WASHER,LOCK 5/16..... UOC:TTA,UU2	2
* 29	PAOZZ	5310000814219	96906	MS27183-12	WASHER,FLAT 5/16..... UOC:TTA,UU2	2
* 30	PAOZZ	5305006388920	80204	B1821BH038C225N	SCREW,CAP,HEXAGON H 3/8-16 X 2.25... UOC:TTA,UUA,UU2	3
* 31	PAOZZ		34623	6032110	BRACKET,ANGLE LEFT..... UOC:TTA,UUA,UU2	1
* 31	PAOZZ		34623	6032114	BRACKET,ANGLE RIGHT..... UOC:TTA,UUA,UU2	1
* 32	PAOZZ	5310009359021	96906	MS51943-35	NUT,SELF-LOCKING HE 3/8-16..... UOC:TTA,UUA,UU2	3
* 33	PAOZZ	5310009643415	19207	10910174-19	WASHER,FLAT 5/16..... UOC:TTA,UUA,UU2	2
* 34	PAOZZ	5306002264829	80204	B1821BH031C125N	BOLT,MACHINE 5/16-18 X 1.25..... UOC:TTA,UUA,UU2	2
* 35	PAOZZ		34623	6032075	BRACKET,DOUBLE ANGL..... UOC:TTA,UUA,UU2	1

END OF FIGURE

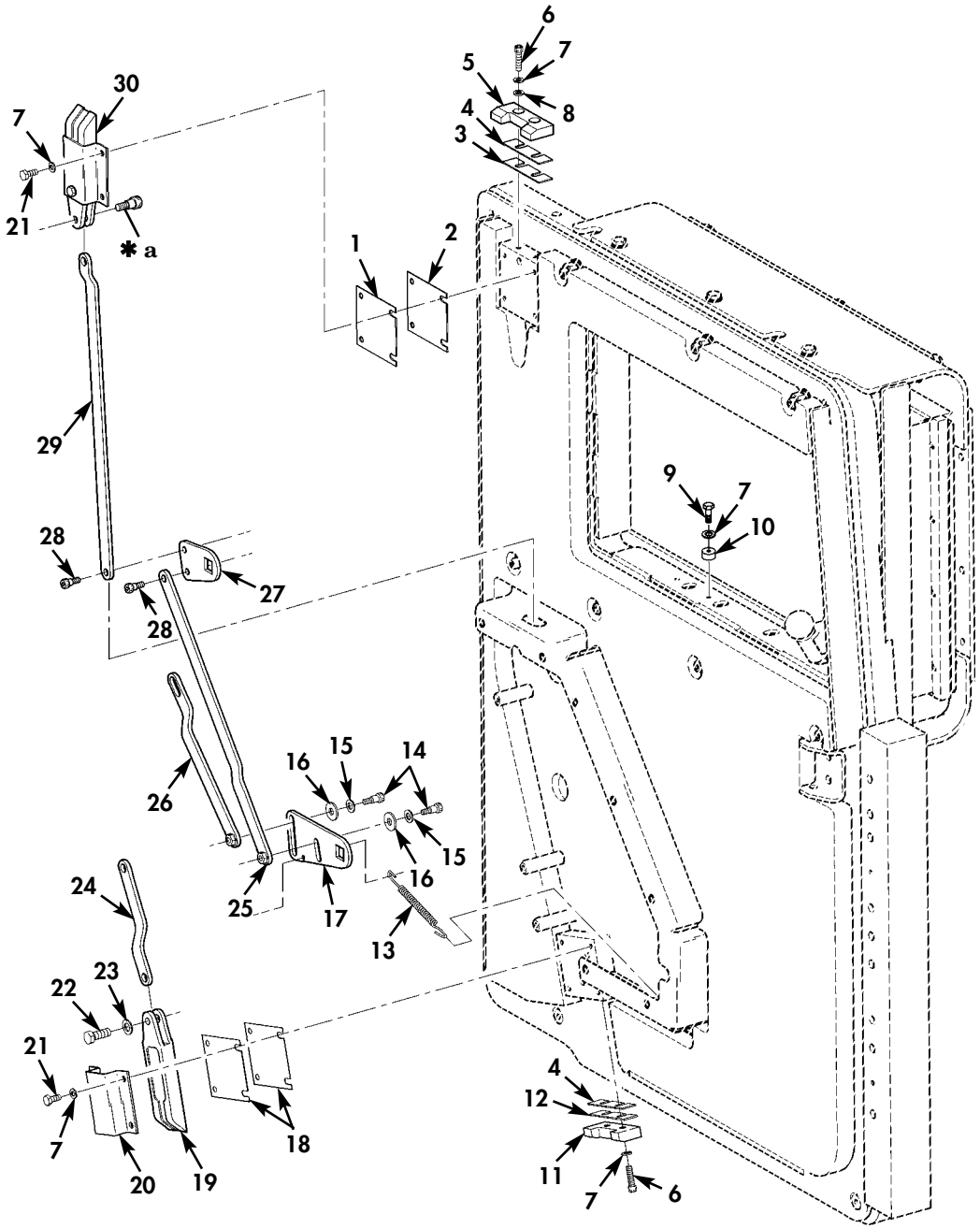

✱ QUANTITY SHOWN
REFLECTS ONE DOOR

✱ **a** PART OF ITEM 30

Figure 167I. Frag 5 Front and Rear Door Combat Lock Lever Assembly.

(1) ITEM NO	(2) SMR CODE	(3) NSN	(4) CAGEC	(5) PART NUMBER	(6) DESCRIPTION AND USABLE ON CODES(UOC)	(7) QTY
					GROUP 1801 BODY,CAB,HOOD,AND HULL ASSEMBLY	
					FIG. 167I FRAG 5 FRONT AND REAR DOOR COMBAT LOCK LEVER ASSEMBLY	
* 1	PFOZZ	5365015546601	34623	6032258	SHIM .060..... UOC:TTA,UUA,UU2	1
* 1	PFOZZ		34623	6032260	SHIM .090..... UOC:TTA,UUA,UU2	1
* 2	PFOZZ	5365015548772	34623	6030754	SHIM .048..... UOC:TTA,UUA,UU2	1
* 3	PFOZZ	5365015550821	34623	6030909	SHIM .048..... UOC:TTA,UUA,UU2	1
* 3	PFOZZ		34623	6032261	SHIM .090..... UOC:TTA,UUA,UU2	1
* 4	PFOZZ	5365015548442	34623	6030910	SHIM .060..... UOC:TTA,UUA,UU2	2
* 5	PAOZZ		34623	6030905	WEDGE,DOOR DOVETAIL..... UOC:TTA,UUA,UU2	1
* 6	PAOZZ	5305014750553	6W728	4397015-093	SCREW,CAP,SOCKET HE 1/4-20 X 1.00... UOC:TTA,UUA,UU2	4
* 7	PAOZZ	5310005825965	80205	MS35338-44	WASHER,LOCK 1/4..... UOC:TTA,UUA,UU2	13
* 8	PAOZZ	5310011023270	24617	2436161	WASHER,FLAT 1/4..... UOC:TTA,UUA,UU2	2
* 9	PAOZZ	5305000712506	80204	B1821BH025C050N	SCREW,CAP,HEXAGON H 1/4-20 X 1/2.... UOC:TTA,UUA,UU2	1
* 10	PAOZZ		34623	6034479	SPACER 1/2..... UOC:TTA,UUA,UU2	1
* 11	PAOZZ		34623	6034473	WEDGE,DOOR DOVETAIL..... UOC:TTA,UUA,UU2	1
* 12	PAOZZ	5365015548295	34623	6030908	SHIM .030..... UOC:TTA,UUA,UU2	1
* 13	PAOZZ		34623	6035273	SPRING,HELICAL,EXTE..... UOC:TTA,UUA,UU2	1
* 14	PAOZZ	5305002253843	80204	B1821BH025C100N	SCREW,CAP,HEXAGON H 1/4-20 X 1.00... UOC:TTA,UUA,UU2	2
* 15	PAOZZ	5310011191024	24617	2436162	WASHER,FLAT 5/16..... UOC:TTA,UUA,UU2	2
* 16	PAOZZ	5310000814219	96906	MS27183-12	WASHER,FLAT 5/16..... UOC:TTA,UUA,UU2	2
* 17	PAOZZ		34623	6031734	ACTUATING LEVER ARM..... UOC:TTA,UUA,UU2	1
* 18	PAOZZ	5365015546601	34623	6030753	SHIM .030..... UOC:TTA,UUA,UU2	2
* 19	PFOZZ		19220	1-5631-13-71	LATCH,DOOR VEHICULA..... UOC:TTA,UUA,UU2	1
* 20	PFOZZ		19220	5631-11-DG	BRACKET,MOUNTING..... UOC:TTA,UUA,UU2	1
* 21	PAOZZ	5305000712505	80204	B1821BH025C088N	SCREW,CAP,HEXAGON H 1/4-20 X 7/8.... UOC:TTA,UUA,UU2	8

(1) ITEM NO	(2) SMR CODE	(3) NSN	(4) CAGEC	(5) PART NUMBER	(6) DESCRIPTION AND USABLE ON CODES(UOC)	(7) QTY
* 22	PAOZZ	5305000680510	80204	B1821BH038C100N	SCREW,CAP,HEXAGON H 3/8-16 X 1.00... UOC:TTA,UUA,UU2	1
* 23	PAOZZ	5310011300517	24617	2436163	WASHER,FLAT 3/8..... UOC:TTA,UUA,UU2	1
* 24	PAOZZ		34623	6031732	CONNECTING LINK,RIG..... UOC:TTA,UUA,UU2	1
* 25	PAOZZ		34623	6031744	CONNECTING LINK,RIG..... UOC:TTA,UUA,UU2	1
* 26	PAOZZ		34623	6031751	CONNECTING LINK,RIG..... UOC:TTA,UUA,UU2	1
* 27	PAOZZ		34623	6031722	CAM,CONTROL L.H.,FRONT OR REAR..... UOC:TTA,UU2	1
* 27	PAOZZ		34623	6031722	CAM,CONTROL L.H..... UOC:UUA	1
* 27	PAOZZ		34623	6031764	CAM,CONTROL R.H..... UOC:UUA	1
* 27	PAOZZ		34623	6031764	CAM,CONTROL R.H.,FRONT OR REAR..... UOC:TTA,UU2	1
* 28	PAOZZ		34623	6029099	SCREW,CAP,SOCKET HE 1/4-20 X 0.66... UOC:TTA,UUA,UU2	2
* 29	PAOZZ		34623	6031769	CONNECTING LINK,RIG..... UOC:TTA,UUA,UU2	1
* 30	PAOZZ		19220	4A-M8639-52PK	LATCH,DOOR,VEHICULA..... UOC:TTA,UUA,UU2	1

END OF FIGURE

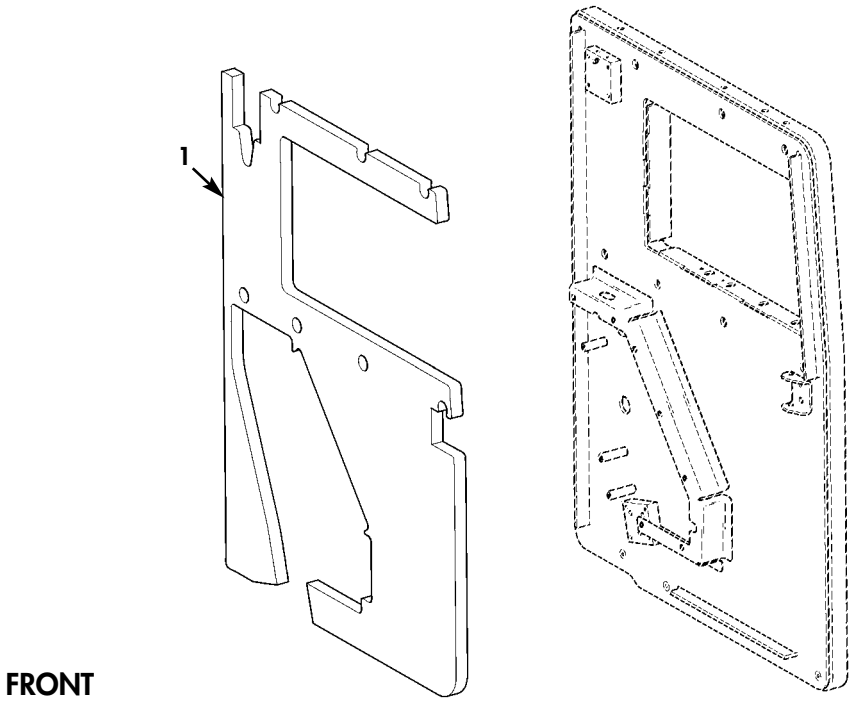

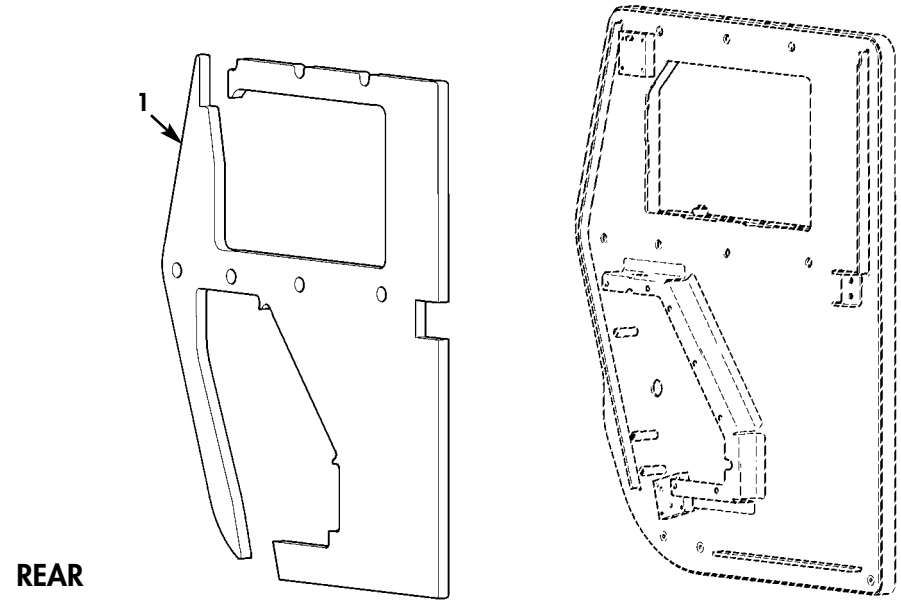

Figure 167J. Frag 5 Door Insulation.

(1) ITEM NO	(2) SMR CODE	(3) NSN	(4) CAGEC	(5) PART NUMBER	(6) DESCRIPTION AND USABLE ON CODES(UOC)	(7) QTY
					GROUP 1801 BODY,CAB,HOOD,AND HULL ASSEMBLY	
					FIG. 167J FRAG 5 DOOR INSULATION	
* 1	PAOZZ		34623	6031464	INSULATION,ACCOUSTI R.H.,FRONT..... UOC:TTA,UUA,UU2	1
* 1	PAOZZ		34623	6031463	INSULATION,ACCOUSTI L.H.,FRONT..... UOC:TTA,UUA,UU2	1
* 1	PAOZZ		34623	6031465	INSULATION,ACCOUSTI L.H.,REAR..... UOC:TTA,UU2	1
* 1	PAOZZ		34623	6031466	INSULATION,ACCOUSTI R.H.,REAR..... UOC:TTA,UU2	1

END OF FIGURE

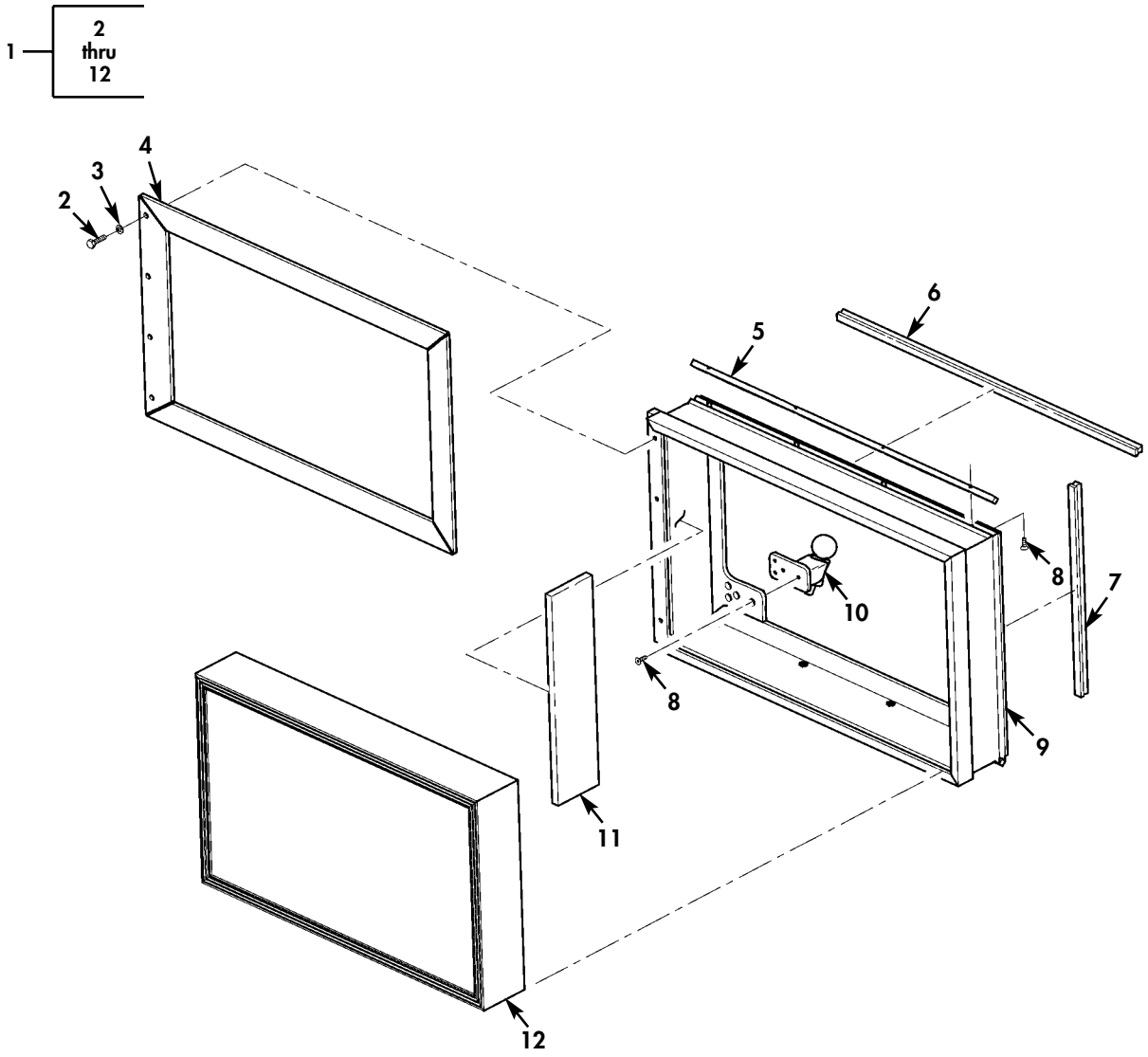

✱ QUANTITY SHOWN
REFLECTS ONE DOOR

Figure 167K. Frag 5 Window Assembly.

(1) ITEM NO	(2) SMR CODE	(3) NSN	(4) CAGEC	(5) PART NUMBER	(6) DESCRIPTION AND USABLE ON CODES(UOC)	(7) QTY
					GROUP 1801 BODY,CAB,HOOD,AND HULL ASSEMBLY	
					FIG. 167K FRAG 5 WINDOW ASSEMBLY	
* 1	PAOOF	2510015455898	34623	6030594	WINDOW,VEHICULAR L.H..... UOC:TTA,UUA,UU2	1
* 1	PAOOF	2510015455899	34623	6030595	WINDOW,VEHICULAR R.H..... UOC:TTA,UUA,UU2	1
* 2	PAOZZ	5305002253843	80204	B1821BH025C100N	.SCREW,CAP,HEXAGON H 1/4-20 X 1.00.. UOC:TTA,UUA,UU2	4
* 3	PAOZZ	5310011023270	24617	2436161	.WASHER,FLAT 1/4..... UOC:TTA,UUA,UU2	4
* 4	PAOZZ		34623	6030592	.FRAME,WINDOW,VEHICU..... UOC:TTA,UUA,UU2	1
* 5	PAOZZ		34623	6030593	.CHANNEL,WINDOW UPPER AND LOWER..... UOC:TTA,UUA,UU2	2
* 6	PAOZZ		34623	6031264	.SEAL,NONMETALIC UPPER AND LOWER.... UOC:TTA,UUA,UU2	2
* 7	PAOZZ		34623	6030760	.SEAL,NONMETALIC L.H. AND R.H..... UOC:TTA,UUA,UU2	2
* 8	PAOZZ	5305007642970	80205	MS24667-21	.SCREW,CAP,SOCKET HE 10-24 X 5/8.... UOC:TTA,UUA,UU2	12
* 9	XAOZZ		34623	6030591	.FRAME,WINDOW ASSY L.H..... UOC:TTA,UUA,UU2	1
* 9	XAOZZ		34623	6030748	.FRAME,WINDOW ASSY R.H..... UOC:TTA,UUA,UU2	1
* 10	PAOZZ	5305015542331	34623	6030597	.KNOB L.H..... UOC:TTA,UUA,UU2	1
* 10	PAOZZ	5355015542334	34623	6030759	.KNOB R.H..... UOC:TTA,UUA,UU2	1
* 11	PAOZZ		34623	6030596	.PLATE,RETAINING,WIN L.H. AND R.H... UOC:TTA,UUA,UU2	2
* 12	PAOZZ		34623	6030412	.WINDOW,VEHICULAR..... UOC:TTA,UUA,UU2	1

END OF FIGURE

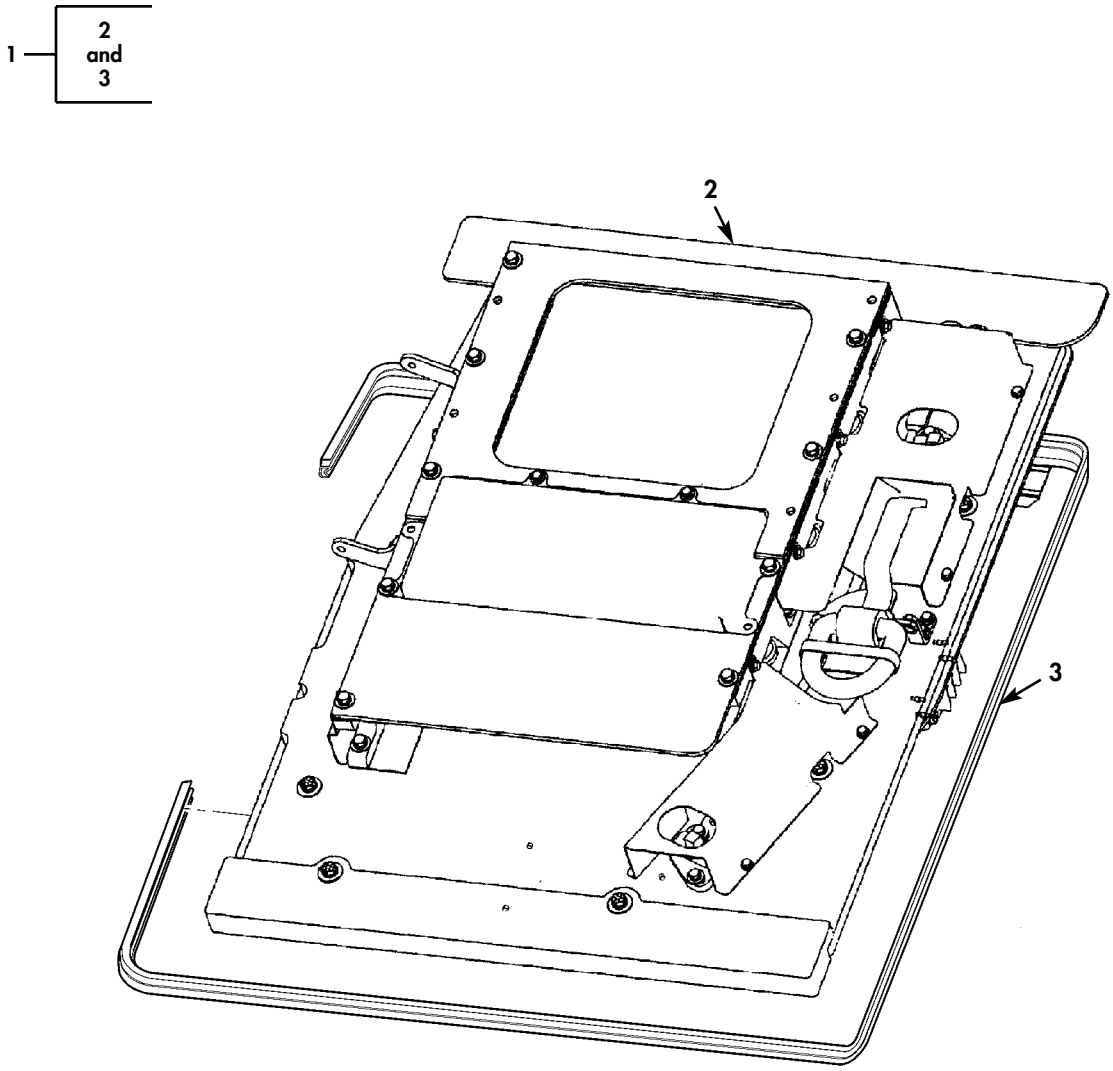

✱ QUANTITY SHOWN
REFLECTS ONE DOOR

Figure 167L. Frag 5 Kit, Front Door Assemblies (M1114).

(1) ITEM NO	(2) SMR CODE	(3) NSN	(4) CAGEC	(5) PART NUMBER	(6) DESCRIPTION AND USABLE ON CODES(UOC)	(7) QTY
					GROUP 1801 BODY,CAB,HOOD,AND HULL ASSEMBLY	
					FIG. 167L FRAG 5 KIT,FRONT DOOR ASSEMBLIES (M1114)	
* 1	PAOOF	2510015455861	6W728	6438244-200M1	DOOR,VEHICULAR WITH SEAL,L.H..... UOC:XBB	1
* 1	PAOOF	2510015455865	6W728	6438242-200M1	DOOR,VEHICULAR WITH SEAL,R.H..... UOC:XBB	1
* 2	XAOOF		6W728	6435090-200M1	.DOOR,VEHICULAR L.H.,FRONT..... UOC:XBB	1
* 2	XAOOF		6W728	6435211-200M1	.DOOR,VEHICULAR R.H.,FRONT..... UOC:XBB	1
* 3	MOOZZ		6W728	6437172-01M1	.SEAL,NONMETALLIC SP MAKE FROM SEAL. P/N 6437172-02M1,9 FEET 6 INCHES LONG..... UOC:XBB	1

END OF FIGURE

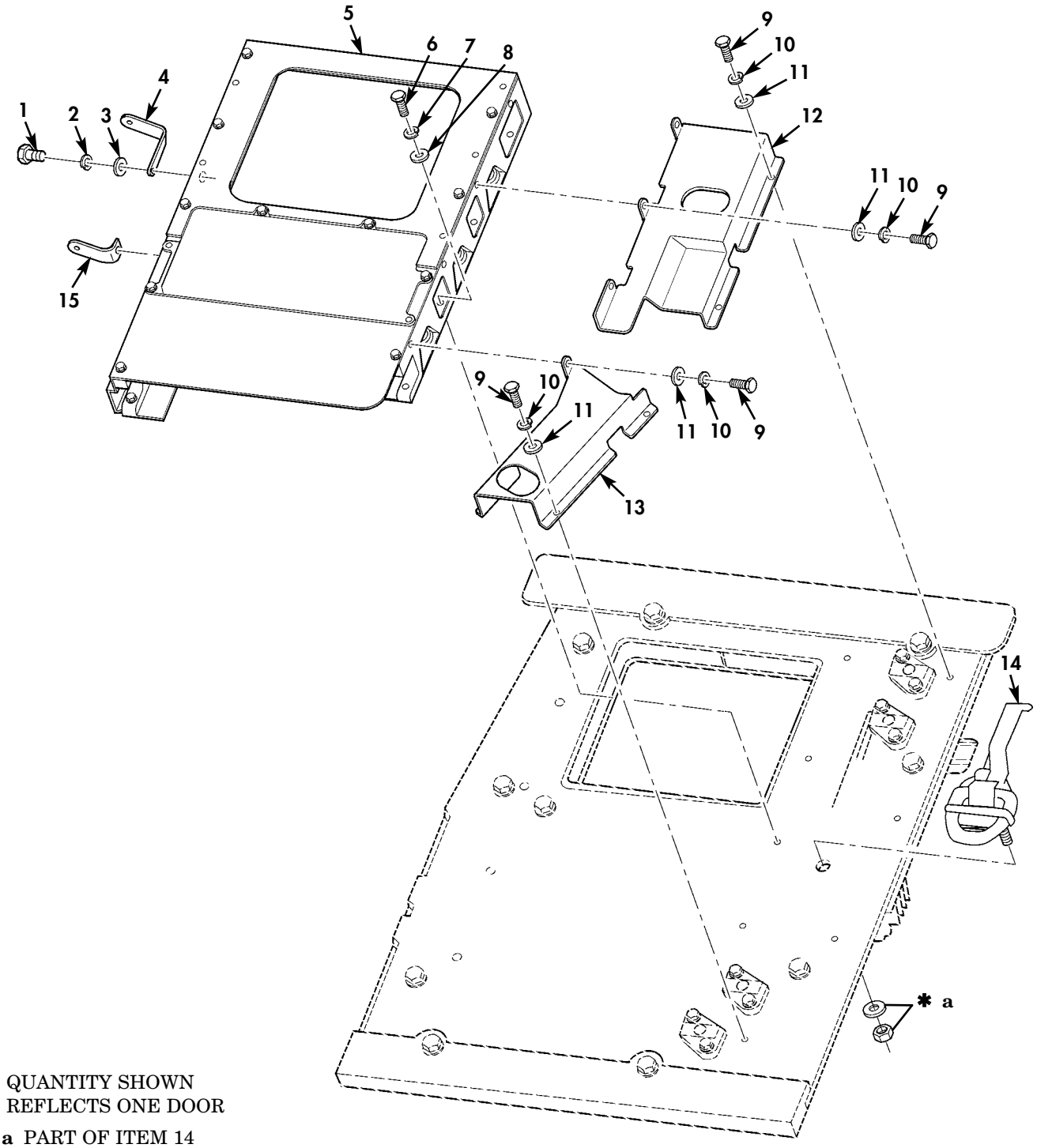

✱ QUANTITY SHOWN REFLECTS ONE DOOR

✱ **a** PART OF ITEM 14

✱ FOR BREAKDOWN OF ITEM 5 SEE FIGURE 169E

Figure 167M. Frag 5 Kit, Front Door Covers and Related Hardware (M1114).

(1) ITEM NO	(2) SMR CODE	(3) NSN	(4) CAGEC	(5) PART NUMBER	(6) DESCRIPTION AND USABLE ON CODES(UOC)	(7) QTY
					GROUP 1801 BODY,CAB,HOOD,AND HULL ASSEMBLY	
					FIG. 167M FRAG 5 KIT,FRONT DOOR COVERS AND RELATED HARDWARE (M1114)	
* 1	PAOZZ	5306014339183	6W728	4397000-036	BOLT,MACHINE 5/16-18 X 1.25..... UOC:XBB	1
* 2	PAOZZ	5310014179942	6W728	4397004-007	WASHER,LOCK 5/16..... UOC:XBB	1
* 3	PAOZZ	5310014363741	6W728	4397005-013	WASHER,FLAT 5/16..... UOC:XBB	1
* 4	PAOZZ		6W728	6436911-200M1	BRACKET,ANGLE MIRROR L.H.,UPPER..... UOC:XBB	1
* 5	PAOZZ		6W728	6435303-200M1	WINDOW ASSEMBLY,VEH R.H..... UOC:XBB	1
* 5	PAOZZ		6W728	6435092-200M1	WINDOW ASSEMBLY,VEH L.H..... UOC:XBB	1
* 6	PAOZZ	5306014339198	6W728	4397000-065	BOLT,MACHINE 3/8-16 X 1.75..... UOC:XBB	8
* 7	PAOZZ	5310014177273	6W728	4397004-008	WASHER,LOCK 3/8..... UOC:XBB	8
* 8	PAOZZ	5310014363742	6W728	4397005-015	WASHER,FLAT 3/8..... UOC:XBB	8
* 9	PAOZZ	5306014307399	6W728	4397000-006	BOLT,MACHINE 1/4-20 X 3/4..... UOC:XBB	9
* 10	PAOZZ	5310014330941	6W728	4397004-006	WASHER,LOCK 1/4..... UOC:XBB	9
* 11	PAOZZ	5310014357784	6W728	4397005-010	WASHER,FLAT 1/4..... UOC:XBB	9
* 12	PAOZZ		6W728	6435320-200M1	COVER,ACCESS R.H.,UPPER..... UOC:XBB	1
* 12	PAOZZ		6W728	6435286-200M1	COVER,ACCESS L.H.,UPPER..... UOC:XBB	1
* 13	PAOZZ		6W728	6435321-200M1	COVER,ACCESS R.H.,LOWER..... UOC:XBB	1
* 13	PAOZZ		6W728	6435287-200M1	COVER,ACCESS L.H.,LOWER..... UOC:XBB	1
* 14	PAOZZ		6W728	6435226-200M1	HANDLE,PULL L.H..... UOC:XBB	1
* 14	PAOZZ		6W728	6435205-200M1	HANDLE,PULL R.H..... UOC:XBB	1
* 15	PAOZZ	2540014180027	6W728	4668216-001	ARM,REARVIEW MIRROR L.H.,LOWER..... UOC:XBB	1

END OF FIGURE

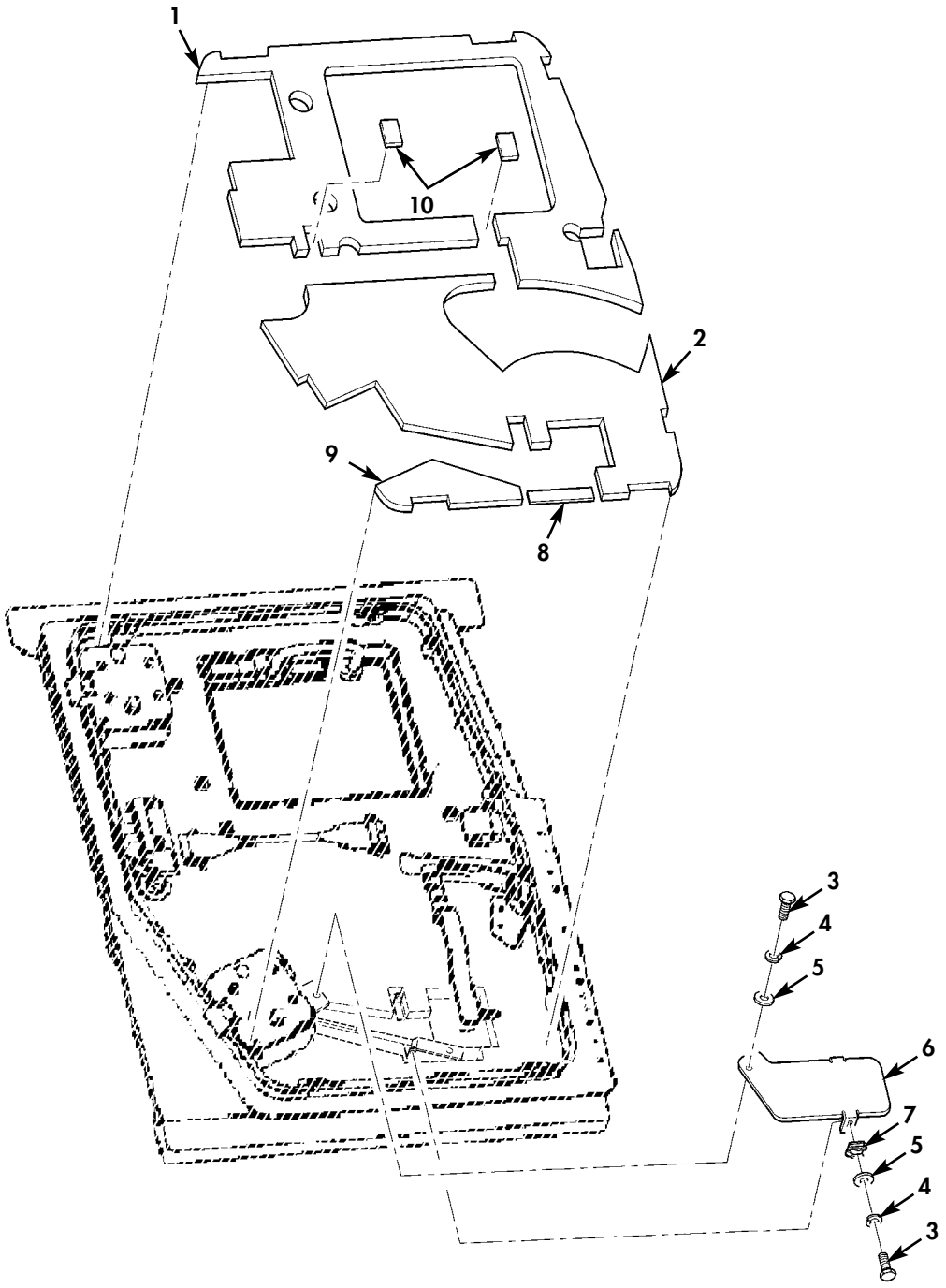

✱ QUANTITY SHOWN
REFLECTS ONE DOOR

Figure 167N. Frag 5 Kit, Front Door Insulation and Cover (M1114).

(1) ITEM NO	(2) SMR CODE	(3) NSN	(4) CAGEC	(5) PART NUMBER	(6) DESCRIPTION AND USABLE ON CODES(UOC)	(7) QTY
					GROUP 1801 BODY,CAB,HOOD,AND HULL ASSEMBLY	
					FIG. 167N FRAG 5 KIT,FRONT DOOR INSULATION AND COVER (M1114)	
* 1	PAOZZ		6W728	6435683-01M1	INSULATION,THERMAL L.H. OR R.H. UPPER..... UOC:XBB	1
* 2	PAOZZ		6W728	6435682-01M1	INSULATION,THERMAL L.H. OR R.H. MIDDLE..... UOC:XBB	1
* 3	PAOZZ	5306014307399	6W728	4397000-006	BOLT,MACHINE 1/4-20 X 3/4..... UOC:XBB	3
* 4	PAOZZ	5310014330941	6W728	4397004-006	WASHER,LOCK 1/4..... UOC:XBB	3
* 5	PAOZZ	5340014178995	6W728	4397005-011	WASHER,FLAT 1/4..... UOC:XBB	3
* 6	PAOZZ		6W728	6435318-01M1	COVER,ACCESS R.H..... UOC:XBB	1
* 6	PAOZZ		6W728	6435298-01M1	COVER,ACCESS L.H..... UOC:XBB	1
* 7	PAOZZ		39428	94850A129	NUT,CLIP ON..... UOC:XBB	2
* 8	PAOZZ		6W728	6435685-01M1	INSULATION,THERMAL L.H. OR R.H..... UOC:XBB	1
* 9	PAOZZ		6W728	6435684-01M1	INSULATION,THERMAL L.H. OR R.H. LOWER..... UOC:XBB	1
* 10	PAOZZ		6W728	6435686-01M1	INSULATION,THERMAL..... UOC:XBB	2

END OF FIGURE

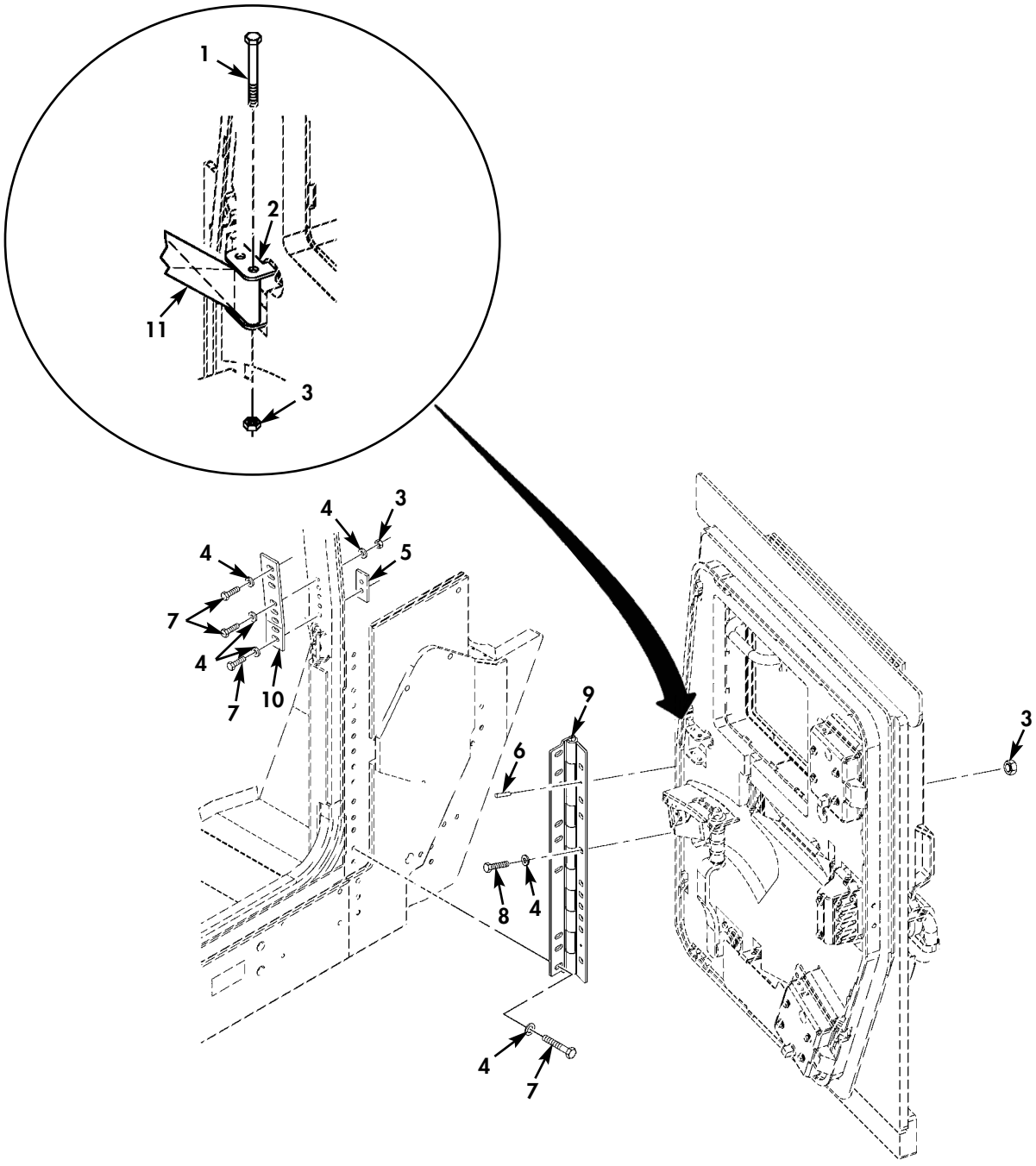

✱ QUANTITY SHOWN
REFLECTS ONE DOOR

Figure 167O. Frag 5 Kit, Front Door Hinges, Safety Strap, and Related Hardware (M1114).

(1) ITEM NO	(2) SMR CODE	(3) NSN	(4) CAGEC	(5) PART NUMBER	(6) DESCRIPTION AND USABLE ON CODES(UOC)	(7) QTY
					GROUP 1801 BODY,CAB,HOOD,AND HULL ASSEMBLY	
					FIG. 167O FRAG 5 KIT,FRONT DOOR HINGES,SAFETY STRAP,AND RELATED HARDWARE (M1114)	
* 1	PAOZZ	5306002264837	80204	B1821BH031C300N	BOLT,MACHINE 5/16-18 X 3.00..... UOC:XBB	2
* 2	PAOZZ		6W728	6435652-01M1	BRACKET,MOUNTING DOOR SAFETY STRAP.. UOC:XBB	1
* 3	PAOZZ	5310014398177	6W728	4397064-005	NUT,SELF-LOCKING,HE 3/8-16..... UOC:XBB	16
* 4	PAOZZ	5310014363742	6W728	4397005-015	WASHER,FLAT 3/8..... UOC:XBB	28
* 5	PAOZZ	5340014467449	6W728	4668219	PLATE,MOUNTING L.H. OR R.H..... UOC:XBB	1
* 6	PFOZZ		6W728	4397025-026	PIN,STRAIGHT HEADLE..... UOC:XBB	2
* 7	PAOZZ	5306014339196	6W728	4397000-060	BOLT,MACHINE 3/8-16 X 1.00..... UOC:XBB	18
* 8	PAOZZ	5305009908632	80204	B1821BH038C375N	SCREW,CAP,HEXAGON H 3/8-16 X 3.75... UOC:XBB	10
* 9	PAOZZ		6W728	6435094-01M1	HINGE,DOOR,VEHICULA L.H..... UOC:XBB	1
* 9	PAOZZ		6W728	6435234-01M1	HINGE,DOOR,VEHICULA R.H..... UOC:XBB	1
* 10	PAOZZ		6W728	6435651-01M1	PLATE,MOUNTING SAFETY STRAP,A-PILLAR L.H..... UOC:XBB	1
* 10	PAOZZ		6W728	6435651-02M1	PLATE,MOUNTING SAFETY STRAP,A-PILLAR R.H..... UOC:XBB	1
* 11	PAOZZ	5340014176474	6W728	4668245	STRAP,WEBBING..... UOC:XBB	1

END OF FIGURE

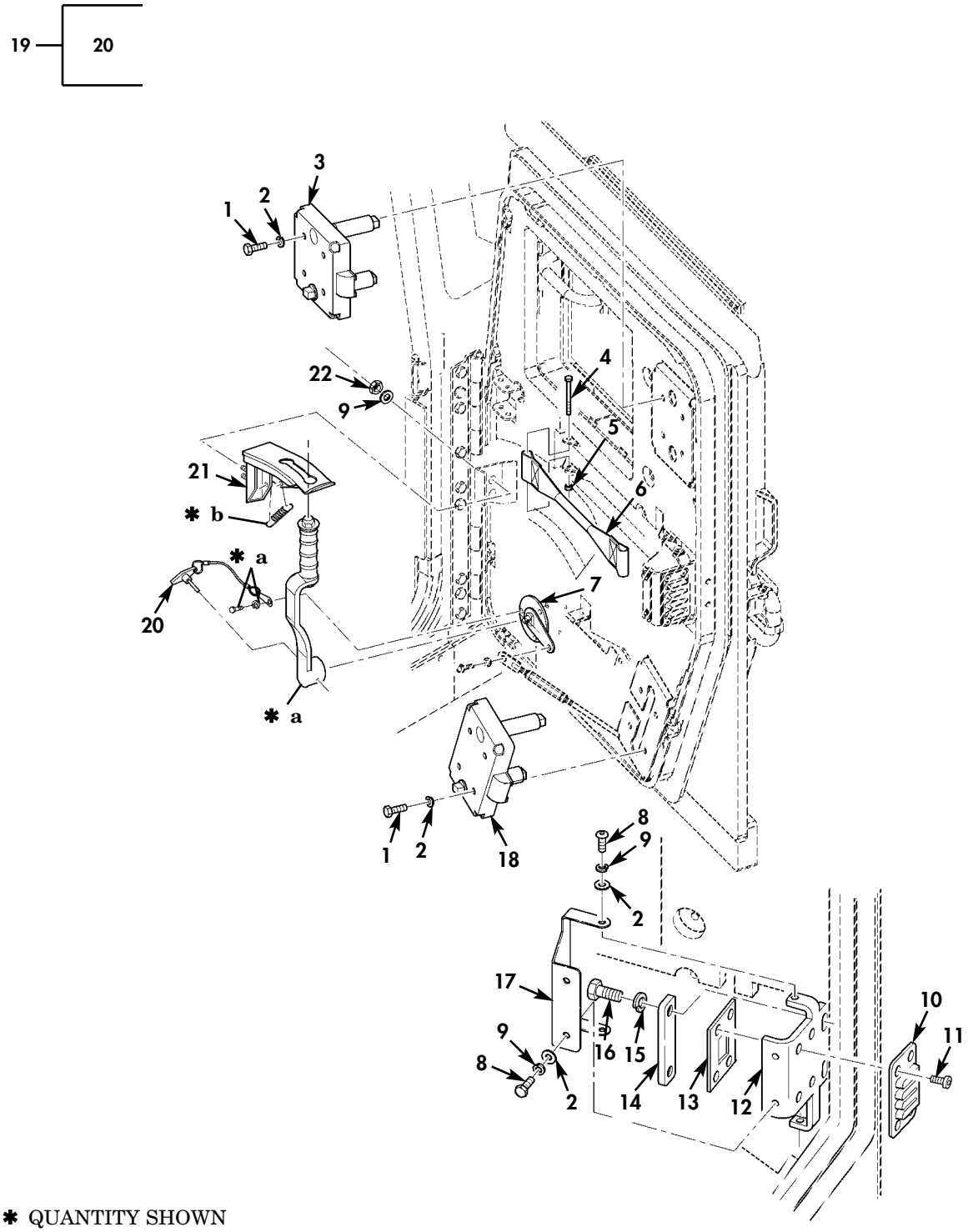

✱ QUANTITY SHOWN REFLECTS ONE DOOR

✱ **a** PART OF ITEM 19

✱ **b** PART OF ITEM 21

Figure 167P. Frag 5 Kit, Front Door Slam Latches and Related Hardware (M1114).

(1) ITEM NO	(2) SMR CODE	(3) NSN	(4) CAGEC	(5) PART NUMBER	(6) DESCRIPTION AND USABLE ON CODES(UOC)	(7) QTY
					GROUP 1801 BODY,CAB,HOOD,AND HULL ASSEMBLY	
					FIG. 167P FRAG 5 KIT,FRONT DOOR SLAM LATCHES AND RELATED HARDWARE (M1114)	
* 1	PAOZZ	5306014339187	6W728	4397000-015	BOLT,MACHINE 1/4-20 X 2.25..... UOC:XBB	8
* 2	PAOZZ	5340014178995	6W728	4397005-011	WASHER,FLAT 1/4..... UOC:XBB	14
* 3	PAOZZ		19220	16874-FTL-75	LATCH,DOOR,VEHICULA L.H.,TOP..... UOC:XBB	1
* 3	PAOZZ		19220	16874-FTR-75	LATCH,DOOR,VEHICULA R.H.,TOP..... UOC:XBB	1
* 4	PAOZZ	5306002264839	80204	B1821BH031C350N	SCREW,CAP,HEXAGON H 5/16-18 X 3.50.. UOC:XBB	2
* 5	PAOZZ	5310014398172	6W728	4397064-003	NUT,SELF-LOCKING,HE 5/16-18..... UOC:XBB	2
* 6	PAOZZ		6W728	6435629-01M1	STRAP,WEBBING..... UOC:XBB	1
* 7	PAOZZ		19220	16875-58L	CAM,CONTROL L.H..... UOC:XBB	1
* 7	PAOZZ		19220	16875-58R	CAM,CONTROL R.H..... UOC:XBB	1
* 8	PAOZZ	5305000712506	80204	B1821BH025C050N	SCREW,CAP,HEXAGON H 1/4-20 X 1/2.... UOC:XBB	4
* 9	PAOZZ	5310014330941	6W728	4397004-006	WASHER,LOCK 1/4..... UOC:XBB	6
* 10	PAOZZ		6W728	6435314-01M1	STRIKE,CATCH L.H. OR R.H..... UOC:XBB	1
* 11	PAOZZ		6W728	4397031-093	SCREW,CAP,SOCKET HE 1/4-20 X 1.00... UOC:XBB	4
* 12	PAOZZ		6W728	6435216-01M1	BRACKET,VEHICULAR C..... UOC:XBB	1
* 13	PAOZZ		6W728	6435313-01M1	PLATE,MOUNTING L.H. OR R.H..... UOC:XBB	1
* 14	PAOZZ		6W728	6435217-01M1	SPACER,PLATE L.H. OR R.H..... UOC:XBB	1
* 15	PAOZZ	5310014177273	6W728	4397004-008	WASHER,LOCK 3/8..... UOC:XBB	2
* 16	PAOZZ	5306014365393	6W728	4397001-062	BOLT,MACHINE 3/8-24 X 1.25..... UOC:XBB	2
* 17	PAOZZ		6W728	6435627-01M1	COVER,ACCESS L.H. OR R.H..... UOC:XBB	1
* 18	PAOZZ		19220	16874-FBL-75	LATCH,DOOR,VEHICULA L.H.,BOTTOM..... UOC:XBB	1
* 18	PAOZZ		19220	16874-FBR-75	LATCH,DOOR,VEHICULA R.H.,BOTTOM..... UOC:XBB	1
* 19	PAOOO		19220	16875-52L-75	LEVER,MANUAL CONTRO L.H..... UOC:XBB	1
* 19	PAOOO		19220	16875-52R-75	LEVER,MANUAL CONTRO R.H..... UOC:XBB	1

(1) ITEM NO	(2) SMR CODE	(3) NSN	(4) CAGEC	(5) PART NUMBER	(6) DESCRIPTION AND USABLE ON CODES(UOC)	(7) QTY
* 20	PAOZZ		19220	AL-16875-SS85	.PIN,QUICK RELEASE..... UOC:XBB	1
* 21	PAOZZ		6W728	6435405-01M1	LEVER,LOCK RELEASE L.H..... UOC:XBB	1
* 21	PAOZZ		6W728	6435406-01M1	LEVER,LOCK RELEASE R.H..... UOC:XBB	1
* 22	PAOZZ	5310014398173	6W728	4397064-001	NUT,SELF-LOCKING,HE 1/4-20..... UOC:XBB	2

END OF FIGURE

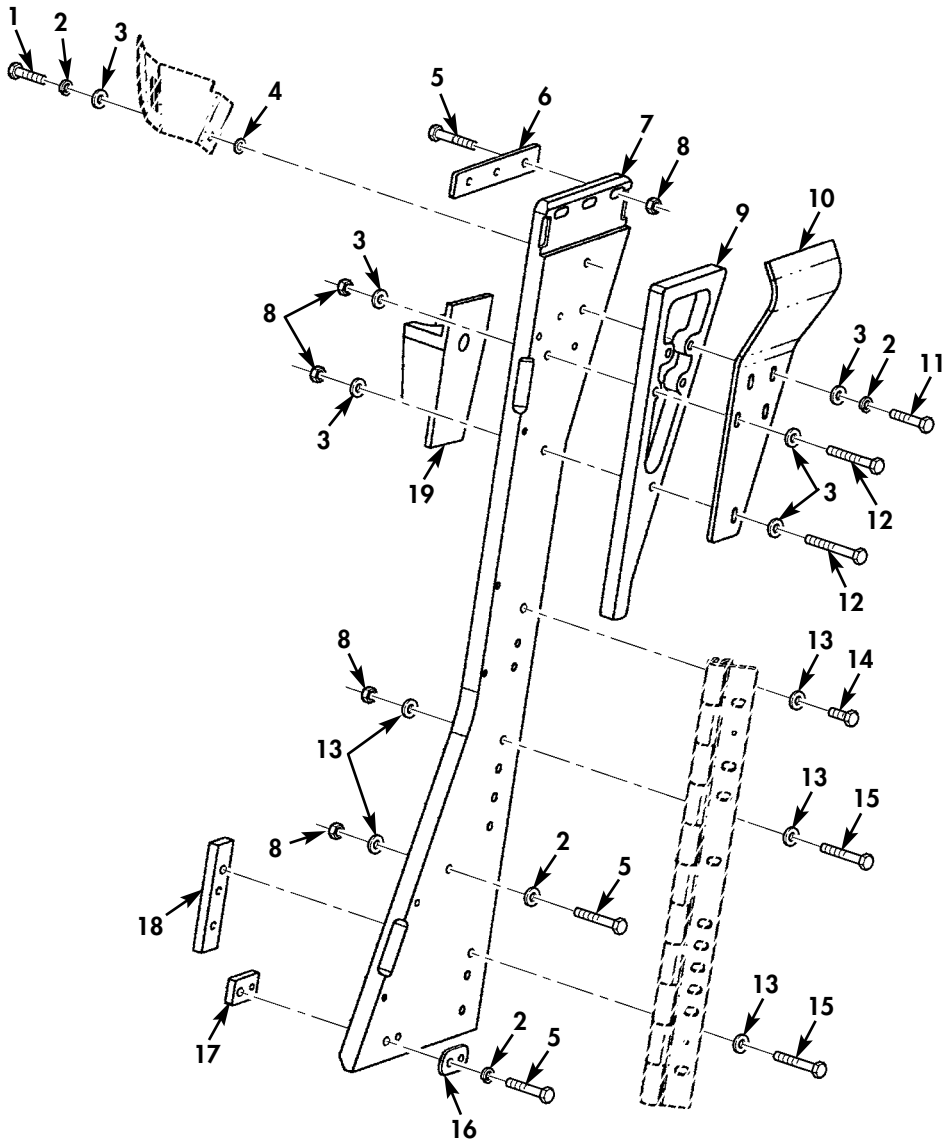

✱ QUANTITY SHOWN
REFLECTS ONE SIDE

Figure 167Q. Frag 5 Kit, B-Pillar Assembly (M1114).

(1) ITEM NO	(2) SMR CODE	(3) NSN	(4) CAGEC	(5) PART NUMBER	(6) DESCRIPTION AND USABLE ON CODES(UOC)	(7) QTY
					GROUP 1801 BODY,CAB,HOOD,AND HULL ASSEMBLY	
					FIG. 167Q FRAG 5 KIT,B-PILLAR ASSEMBLY (M1114)	
* 1	PAOZZ	5305014206637	6W728	4397000-034	SCREW,CAP,HEXAGON H 5/16-18 X 1.00.. UOC:XBB	1
* 2	PAOZZ	5310014179942	6W728	4397004-007	WASHER,LOCK 5/16..... UOC:XBB	6
* 3	PAOZZ	5310014363741	6W728	4397005-013	WASHER,FLAT 5/16..... UOC:XBB	8
* 4	PFOZZ		6W728	6430528-05M1	WASHER,LOCK,SERRATE M8..... UOC:XBB	1
* 5	PAOZZ	5305015305159	6W728	4397000-041	SCREW,CAP,HEXAGON H 5/16-18 X 2.25.. UOC:XBB	6
* 6	PAOZZ		6W728	6435490-01M1	PLATE,MOUNTING..... UOC:XBB	1
* 7	PAOZZ		6W728	6435148-200M1	ARMOR,SUPPLEMENTAL B-PILLAR,L.H..... UOC:XBB	1
* 7	PAOZZ		6W728	6435220-200M1	ARMOR,SUPPLEMENTAL B-PILLAR,R.H..... UOC:XBB	1
* 8	PAOZZ	5310014398172	6W728	4397064-003	NUT,SELF-LOCKING,HE 5/16-18..... UOC:XBB	7
* 9	PAOZZ		6W728	6437057-200M1	BRACKET,MOUNTING DEFLECTOR PLATE.... UOC:XBB	1
* 10	PAOZZ		6W728	6437068-200M1	ARMOR,SUPPLEMENTAL L.H..... UOC:XBB	1
* 10	PAOZZ		6W728	6437069-200M1	ARMOR,SUPPLEMENTAL R.H..... UOC:XBB	1
* 11	PAOZZ	5305014282938	6W728	4397000-040	SCREW,MACHINE 5/16-18 X 2.00..... UOC:XBB	2
* 12	PAOZZ	5306002264836	80204	B1821BH031C275N	BOLT,MACHINE 5/16-18 X 2.75..... UOC:XBB	3
* 13	PAOZZ	5310014363742	6W728	4397005-015	WASHER,FLAT 3/8..... UOC:XBB	12
* 14	PAOZZ	5306014339196	6W728	4397000-060	BOLT,MACHINE 3/8-16 X 1.00..... UOC:XBB	3
* 15	PAOZZ	5305014366376	6W728	4397000-067	SCREW,CAP,HEXAGON H 3/8-16 X 2.25... UOC:XBB	7
* 16	PAOZZ		6W728	6435350-200M1	PLATE,MOUNTING..... UOC:XBB	1
* 17	PAOZZ		6W728	6435630-01M1	PLATE,MOUNTING..... UOC:XBB	1
* 18	PAOZZ		6W728	6435235-01M1	PLATE,MOUNTING..... UOC:XBB	1
* 19	PAOZZ		6W728	6435193-01M1	BRACKET,MOUNTING L.H..... UOC:XBB	1
* 19	PAOZZ		6W728	6435218-01M1	BRACKET,MOUNTING R.H..... UOC:XBB	1

END OF FIGURE

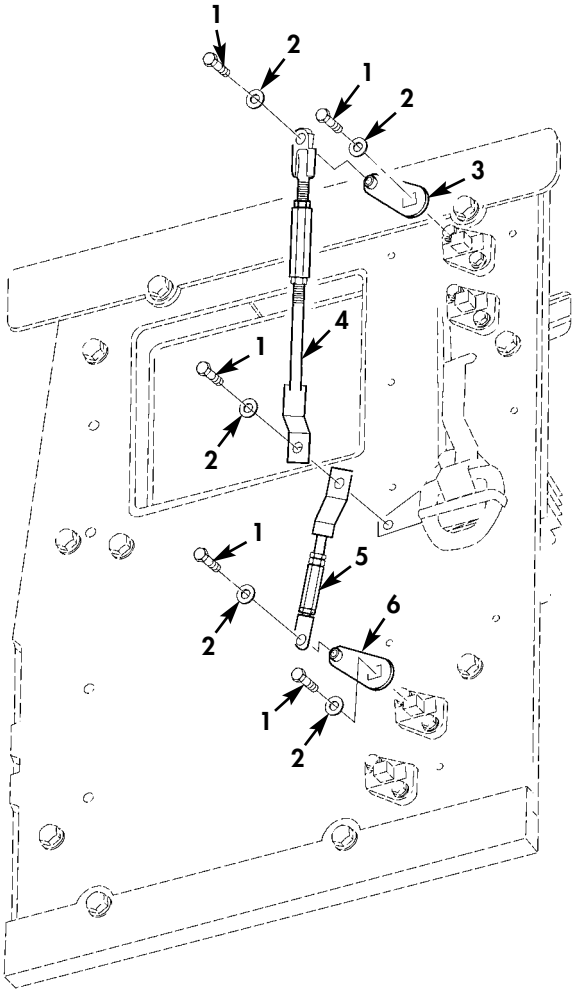

✱ QUANTITY SHOWN
REFLECTS ONE DOOR

Figure 167R. Frag 5 Kit, Front Door Linkages (M1114).

(1) ITEM NO	(2) SMR CODE	(3) NSN	(4) CAGEC	(5) PART NUMBER	(6) DESCRIPTION AND USABLE ON CODES(UOC)	(7) QTY
					GROUP 1801 BODY,CAB,HOOD,AND HULL ASSEMBLY	
					FIG. 167R FRAG 5 KIT,FRONT DOOR LINKAGES (M1114)	
1	PAOZZ	5305007215492	80204	B1821BH038C063N	SCREW,CAP,HEXAGON H 3/8-16 X 5/8... UOC:XBB	5
2	PAOZZ	5310000806004	96906	MS27183-14	WASHER,FLAT 3/8..... UOC:XBB	5
* 3	PAOZZ	3040015642311	19220	16874-64-75	CAM CONTROL TOP,L.H. OR R.H..... UOC:XBB	1
* 4	PAOZZ		19220	16874-FT-75	CONTROL ROD TOP,L.H..... UOC:XBB	1
* 4	PAOZZ	5342015641200	19220	16877-FT-75	CONTROL ROD TOP,R.H..... UOC:XBB	1
* 5	PAOZZ		19220	16877-FB-75	CONTROL ROD L.H. OR R.H.,BOTTOM..... UOC:XBB	1
* 6	PFOZZ	3040015648733	19220	16874-63B-75	CAM CONTROL L.H.,BOTTOM..... UOC:XBB	1
* 6	PFOZZ	3040015642313	19220	16874-63A-75	CAM CONTROL R.H.,BOTTOM..... UOC:XBB	1

END OF FIGURE

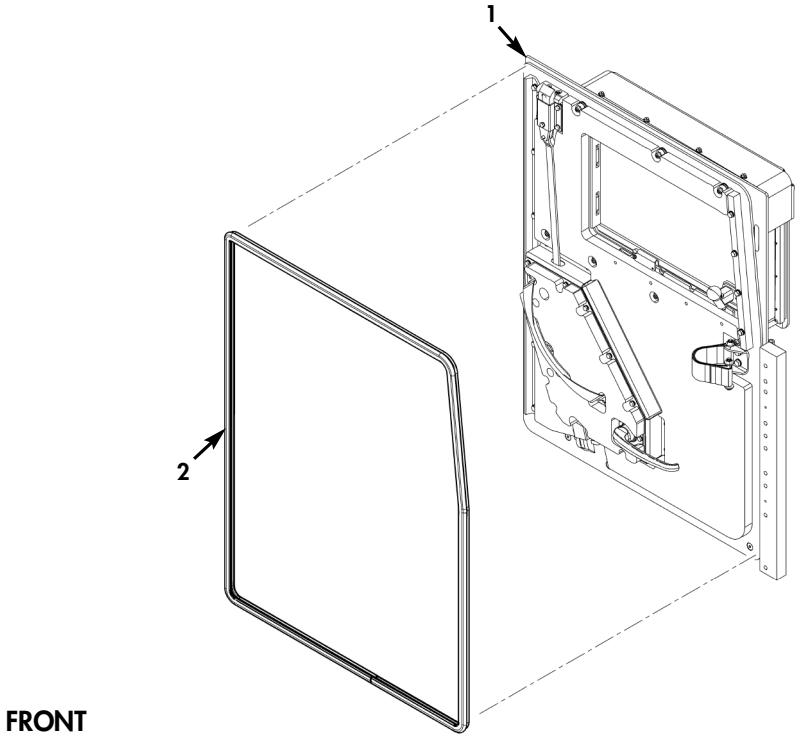

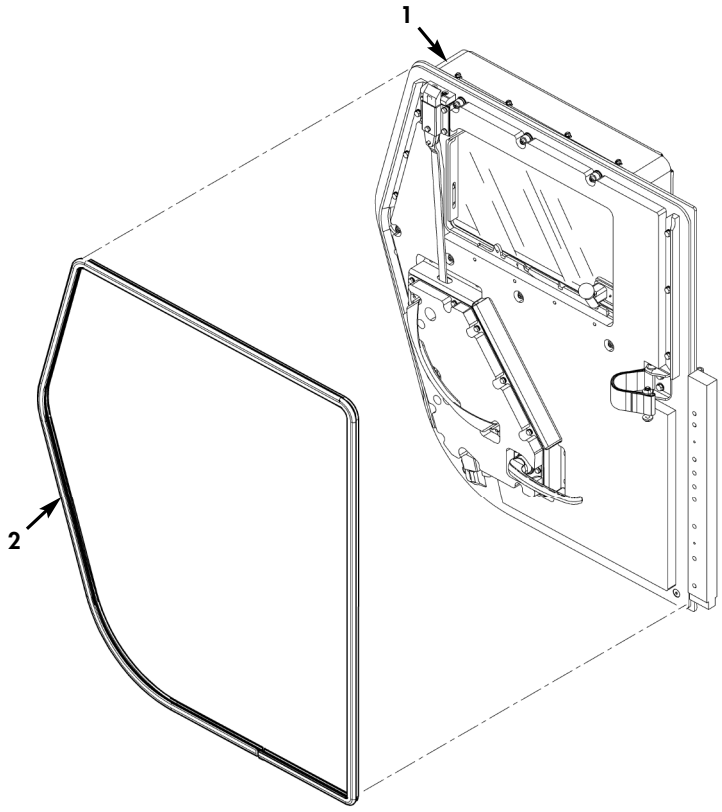

✱ QUANTITY SHOWN
REFLECTS ONE DOOR

Figure 167S. Front and Rear Standard Threat Door Assembly and Seal.

(1) ITEM NO	(2) SMR CODE	(3) NSN	(4) CAGEC	(5) PART NUMBER	(6) DESCRIPTION AND USABLE ON CODES(UOC)	(7) QTY
					GROUP 1801 BODY,CAB,HOOD AND HULL ASSEMBLY	
					FIG. 167S FRONT AND REAR STANDARD THREAT DOOR ASSEMBLY AND SEAL	
* 1	PAOOO		34623	6039324	DOOR,VEHICULAR FRONT,L.H..... UOC:TTA,TT1,UUA,UU2	1
* 1	PAOOO		34623	6039325	DOOR,VEHICULAR FRONT,R.H..... UOC:TTA,TT1,UUA,UU2	1
* 1	PAOOO		34623	6039226	DOOR,VEHICULAR REAR,L.H..... UOC:TTA,TT1,UU2	1
* 1	PAOOO		34623	6039227	DOOR,VEHICULAR REAR,R.H..... UOC:TTA,TT1,UU2	1
* 2	PFOZZ	5330015548341	34623	6033488	SEAL,NONMETALLIC..... UOC:TTA,TT1,UUA,UU2	1

END OF FIGURE

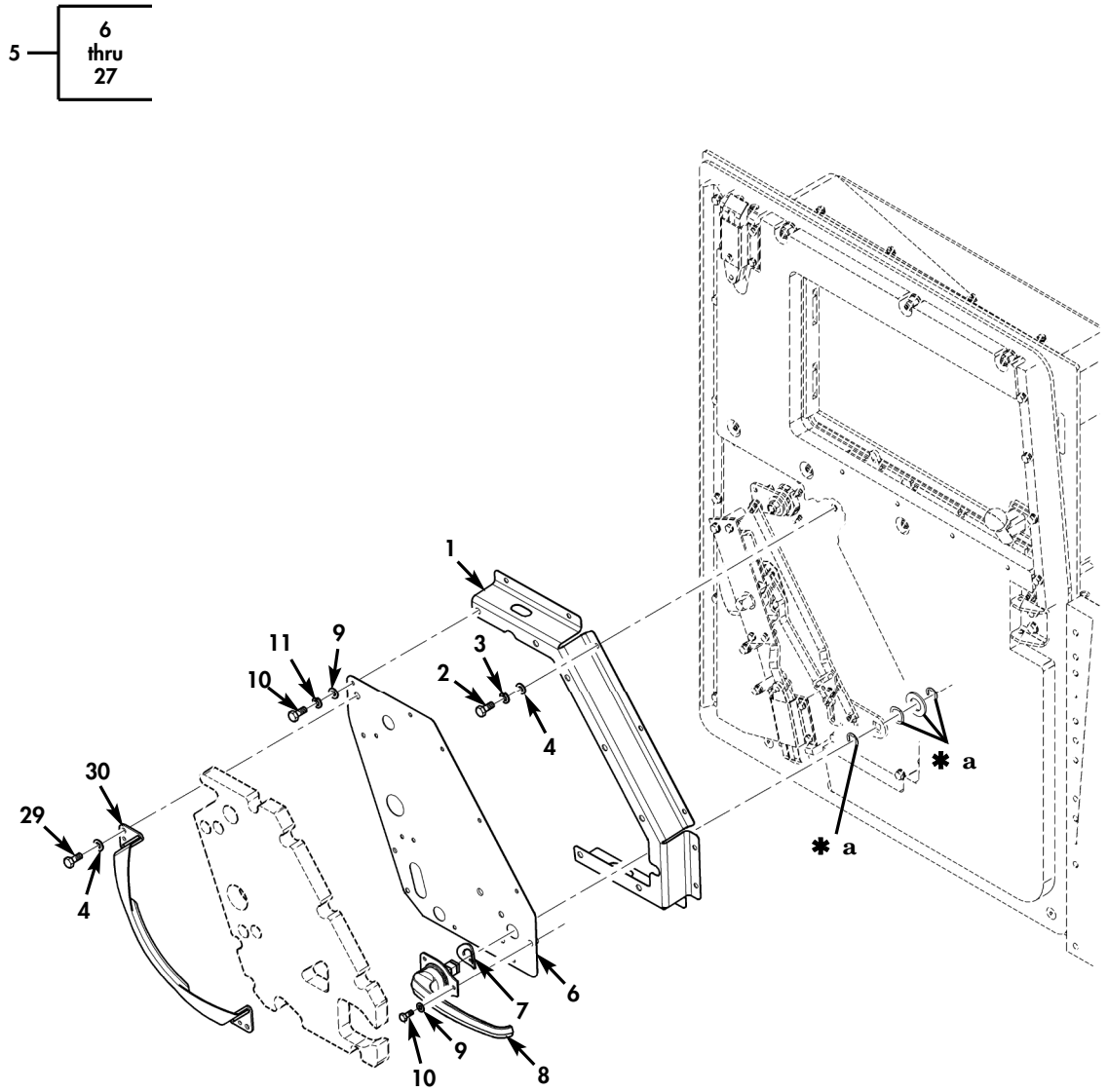

✱ QUANTITY SHOWN
REFLECTS ONE DOOR

✱ **a** PART OF ITEM 8

Figure 167T. Front Standard Threat Door Linkages and Related Parts (Sheet 1 of 2).

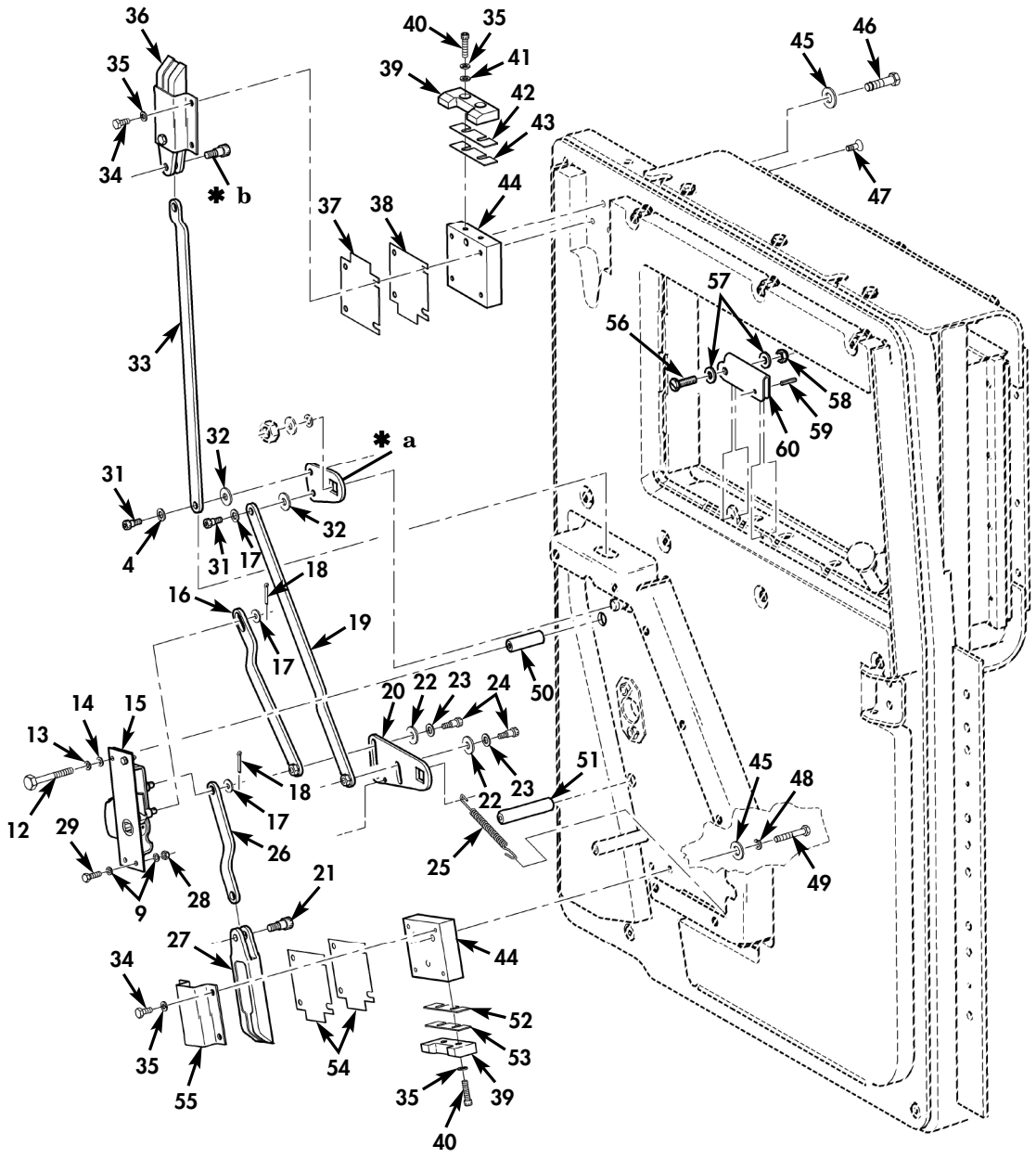

✱ QUANTITY SHOWN
REFLECTS ONE DOOR

✱ **a** PART OF ITEM 8

✱ **b** PART OF ITEM 36

Figure 167T. Front Standard Threat Door Linkages and Related Parts (Sheet 2 of 2).

(1) ITEM NO	(2) SMR CODE	(3) NSN	(4) CAGEC	(5) PART NUMBER	(6) DESCRIPTION AND USABLE ON CODES(UOC)	(7) QTY
					GROUP 1801 BODY,CAB,HOOD,AND HULL ASSEMBLY	
					FIG. 167T FRONT STANDARD THREAT DOOR LINKAGES AND RELATED PARTS	
* 1	PFOZZ	2590015688343	34623	6039195	BRACKET,VEHICULAR C, L.H..... UOC:TTA,TT1,UUA,UU2	1
* 1	PFOZZ	2590015691518	34623	6039306	BRACKET,VEHICULAR C, R.H..... UOC:TTA,TT1,UUA,UU2	1
* 2	PAOZZ	5306002264824	80204	B1821BH031C063N	BOLT,MACHINE 5/16-18 X 5/8..... UOC:TTA,TT1,UUA,UU2	9
* 3	PAOZZ	5310004079566	80205	MS35338-45	WASHER,LOCK 5/16..... UOC:TTA,TT1,UUA,UU2	7
* 4	PAOZZ	5310011191024	24617	2436162	WASHER,FLAT 5/16..... UOC:TTA,TT1,UUA,UU2	12
* 5	PAOOO		34623	6035175	LOCK,HANDLE ASSEMBL L.H..... UOC:TTA,TT1,UUA,UU2	1
* 5	PAOOO		34623	6035176	LOCK,HANDLE ASSEMBL R.H..... UOC:TTA,TT1,UUA,UU2	1
* 6	PAOZZ	5340015691336	34623	6035376	.COVER,ACCESS L.H..... UOC:TTA,TT1,UUA,UU2	1
* 6	PAOZZ	5340015687857	34623	6035377	.COVER,ACCESS R.H..... UOC:TTA,TT1,UUA,UU2	1
* 7	PFOZZ	5310015688391	34623	6039739	.WASHER,WAVE..... UOC:TTA,TT1,UUA,UU2	1
* 8	PAOZZ	2540015635843	19200	6-5624-52	.HANDLE,DOOR,VEHICUL L.H. OR R.H.,INNER..... UOC:TTA,TT1,UUA,UU2	1
* 9	PAOZZ	5310011023270	34623	2436161	.WASHER,FLAT 1/4..... UOC:TTA,TT1,UUA,UU2	16
* 10	PAOZZ	5305000687837	80204	B1821BH025C063N	.SCREW,CAP,HEXAGON H 1/4-20 X 5/8... UOC:TTA,TT1,UUA,UU2	10
* 11	PAOZZ	5310005825965	80205	MS35338-44	.WASHER,LOCK 1/4..... UOC:TTA,TT1,UUA,UU2	7
* 12	PAOZZ	5306002264836	80204	B1821BH031C275N	.BOLT,MACHINE 5/16-18 X 2.75..... UOC:TTA,TT1,UUA,UU2	3
* 13	PAOZZ	5310004079566	80205	MS35338-45	.WASHER,LOCK 5/16..... UOC:TTA,TT1,UUA,UU2	3
* 14	PAOZZ	5310011191024	24617	2436162	.WASHER,FLAT..... UOC:TTA,TT1,UUA,UU2	3
* 15	PAOZZ	2540015635043	34623	6035375	.LATCH,DOOR,VEHICULA..... UOC:TTA,TT1,UUA,UU2	1
* 16	PAOZZ	2540015635849	34623	6031751	.LATCH,DOOR,VEHICULA..... UOC:TTA,TT1,UUA,UU2	1
* 17	PAOZZ	5310014124013	24617	2436163	.WASHER,FLAT 3/8..... UOC:TTA,TT1,UUA,UU2	3
* 18	PAOZZ	5315008395821	80205	MS24665-351	.PIN,COTTER..... UOC:TTA,TT1,UUA,UU2	2
* 19	PAOZZ	3040015633761	34623	6031744	.CONNECTING LINK,RIG..... UOC:TTA,TT1,UUA,UU2	1
* 20	PAOZZ	2590015634560	34623	6031734	.BRACKT,VEHICULAR C..... UOC:TTA,TT1,UUA,UU2	1
* 21	PFOZZ	5305015684513	19200	1-2525-18NP	.SCREW,SHOULDER..... UOC:TTA,TT1,UUA,UU2	1

(1) ITEM NO	(2) SMR CODE	(3) NSN	(4) CAGEC	(5) PART NUMBER	(6) DESCRIPTION AND USABLE ON CODES(UOC)	(7) QTY
* 22	PAOZZ		39428	95630A480	.WASHER,FLAT PLASTIC..... UOC:TTA,TT1,UUA,UU2	2
* 23	PAOZZ	5310011191024	24617	2436162	.WASHER,FLAT 5/16..... UOC:TTA,TT1,UUA,UU2	2
* 24	PAOZZ	5305015227214	96547	263005026TPH-1	.SCREW,SHOULDER..... UOC:TTA,TT1,UUA,UU2	2
* 25	PFOZZ	5360015634873	34623	6035273	.SPRING,HELICAL,EXTE..... UOC:TTA,TT1,UUA,UU2	1
* 26	PAOZZ	3040015633761	34623	6031732	.CONNECTING LINK,RIG..... UOC:TTA,TT1,UUA,UU2	1
* 27	PAOZZ	5340015632356	19200	1-5631-13-71	.STRIKE,CATCH LOWER..... UOC:TTA,TT1,UUA,UU2	1
* 28	PAOZZ	5310000614650	81349	M45913/3-4CG8C	NUT,SELF-LOCKING,HE 1/4-20..... UOC:TTA,TT1,UUA,UU2	3
* 29	PAOZZ	5305000712505	80204	B1821BH025C088N	SCREW,CAP,HEXAGON H 1/4-20 X 7/8.... UOC:TTA,TT1,UUA,UU2	7
* 30	PAOZZ	2540015457418	19207	12485221	LATCH,DOOR,VEHICULA..... UOC:TTA,TT1,UUA,UU2	1
* 31	PAOZZ	5305015227214	96547	263005026TPH-1	SCREW,SHOULDER..... UOC:TTA,TT1,UU2	2
* 32	PAOZZ		39428	95630A480	WASHER,FLAT PLASTIC..... UOC:TTA,TT1,UU2	2
* 33	PAOZZ	3040015635160	34623	6031769	CONNECTING LINK,RIG..... UOC:TTA,TT1,UUA,UU2	1
* 34	PAOZZ	5305000712505	80204	B1821BH025C088N	SCREW,CAP,HEXAGON H 1/4-20 X 7/8.... UOC:TTA,TT1,UUA,UU2	8
* 35	PAOZZ	5310005825965	80205	MS35338-44	WASHER,LOCK 1/4..... UOC:TTA,TT1,UUA,UU2	12
* 36	PAOZZ	2540015642896	19200	4A-M8639-52PK	LATCH,DOOR,VEHICULA UPPER..... UOC:TTA,TT1,UUA,UU2	1
* 37	PAOZZ	5365015548772	34623	6030754	SHIM .048..... UOC:TTA,TT1,UUA,UU2	V
* 38	PFOZZ	5365015546601	34623	6032258	SHIM .030 THICK..... UOC:TTA,TT1,UUA,UU2	V
* 39	PAOZZ	5340015633273	34623	6030905	PLATE,MOUNTING UPPER..... UOC:TTA,TT1,UUA,UU2	1
* 39	PAOZZ	5340015634646	34623	6034473	PLATE,MOUNTING LOWER..... UOC:TTA,TT1,UUA,UU2	1
* 40	PFOZZ	5305014750553	6W728	4397015-093	SCREW,CAP,SOCKET HE 1/4-20 X 1.00... UOC:TTA,TT1,UUA,UU2	4
* 41	PAOZZ	5310011023270	34623	2436161	WASHER,FLAT 1/4..... UOC:TTA,TT1,UUA,UU2	2
* 42	PAOZZ	5365015548442	34623	6030910	SHIM..... UOC:TTA,TT1,UUA,UU2	V
* 43	PAOZZ	5365015550821	34623	6030909	SHIM..... UOC:TTA,TT1,UUA,UU2	V
* 44	PAOZZ	2590015691313	34623	6039250	BLOCK,MOUNTING,ACTI..... UOC:TTA,TT1,UUA,UU2	2
* 45	PAOZZ	5310014124013	24617	2436163	WASHER,FLAT 3/8..... UOC:TTA,TT1,UUA,UU2	2
* 46	PAOZZ	5305002264831	80204	B1821BH038C150N	SCREW,CAP,HEXAGON H 3/8-16 X 1.50... UOC:TTA,TT1,UUA,UU2	1
* 47	PAOZZ	5305000509215	80205	MS24667-52	SCREW, SOCKET, FLAT..... UOC:TTA,TT1,UU2	2

(1) ITEM NO	(2) SMR CODE	(3) NSN	(4) CAGEC	(5) PART NUMBER	(6) DESCRIPTION AND USABLE ON CODES(UOC)	(7) QTY
* 48	PAOZZ	5310000045033	80205	MS35338-46	WASHER,LOCK 3/8..... UOC:TTA,TT1,UUA,UU2	3
* 49	PAOZZ	5305005432866	80204	B1821BH038C250N	SCREW,CAP,HEXAGON H 3/8-16 X 2.50... UOC:TTA,TT1,UUA,UU2	3
* 50	PFOZZ	5365015683403	34623	6039219-1.86	SPACER,SLEEVE..... UOC:TTA,TT1,UUA,UU2	1
* 51	PFOZZ	5365015684001	34623	6039219-2.14	SPACER,SLEEVE..... UOC:TTA,TT1,UUA,UU2	2
* 52	PAOZZ	5365015548442	34623	6030910	SHIM..... UOC:TTA,TT1,UUA,UU2	V
* 53	PAOZZ	5365015548295	34623	6030908	SHIM..... UOC:TTA,TT1,UUA,UU2	V
* 54	PAOZZ	5365015546601	34623	6030753	SHIM..... UOC:TTA,TT1,UUA,UU2	V
* 55	PAOZZ	2590015633677	19200	5631-11-DG	BRACKET,VEHICULAR C..... UOC:TTA,TT1,UUA,UU2	1
* 56	PAOZZ	5305010056715	96906	MS51849-77	SCREW,MACHINE..... UOC:TTA,TT1,UUA,UU2	1
* 57	PAOZZ	5310004022778	24617	9416128	WASHER,FLAT..... UOC:TTA,TT1,UUA,UU2	2
* 58	PAOZZ	5310012699245	7X677	190254	NUT,SELF-LOCKING,HE..... UOC:TTA,TT1,UUA,UU2	1
* 59	PAOZZ	5315008443964	80205	MS16562-47	PIN,SPRING..... UOC:TTA,TT1,UUA,UU2	1
* 60	PFOZZ	5340015746900	34623	6035561	BRACKET,MOUNTING..... UOC:TTA,TT1,UUA,UU2	1

END OF FIGURE

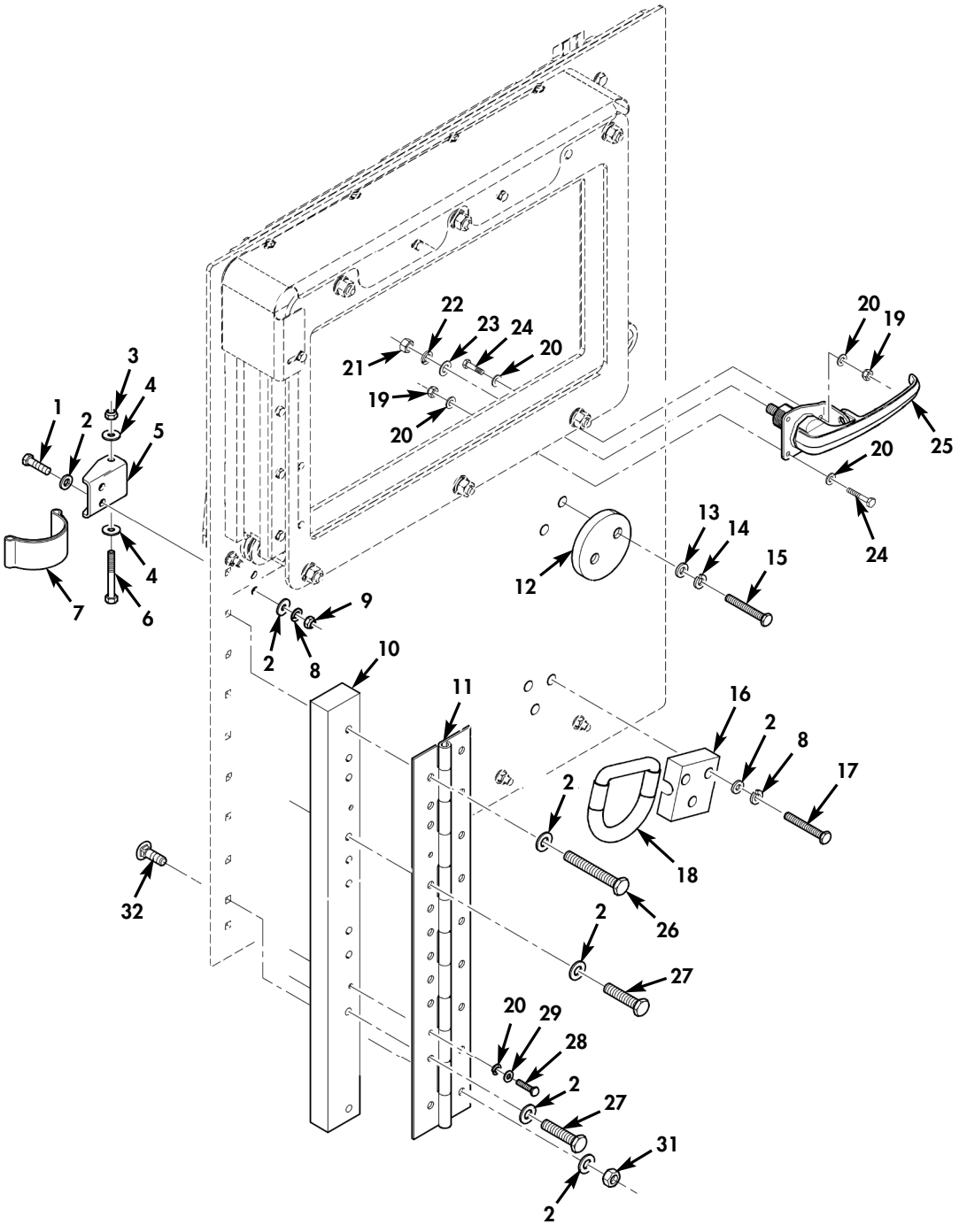

✱ QUANTITY SHOWN
REFLECTS ONE DOOR

Figure 167U. Standard Threat Door Hinges and Mounting Hardware (Sheet 1 of 2).

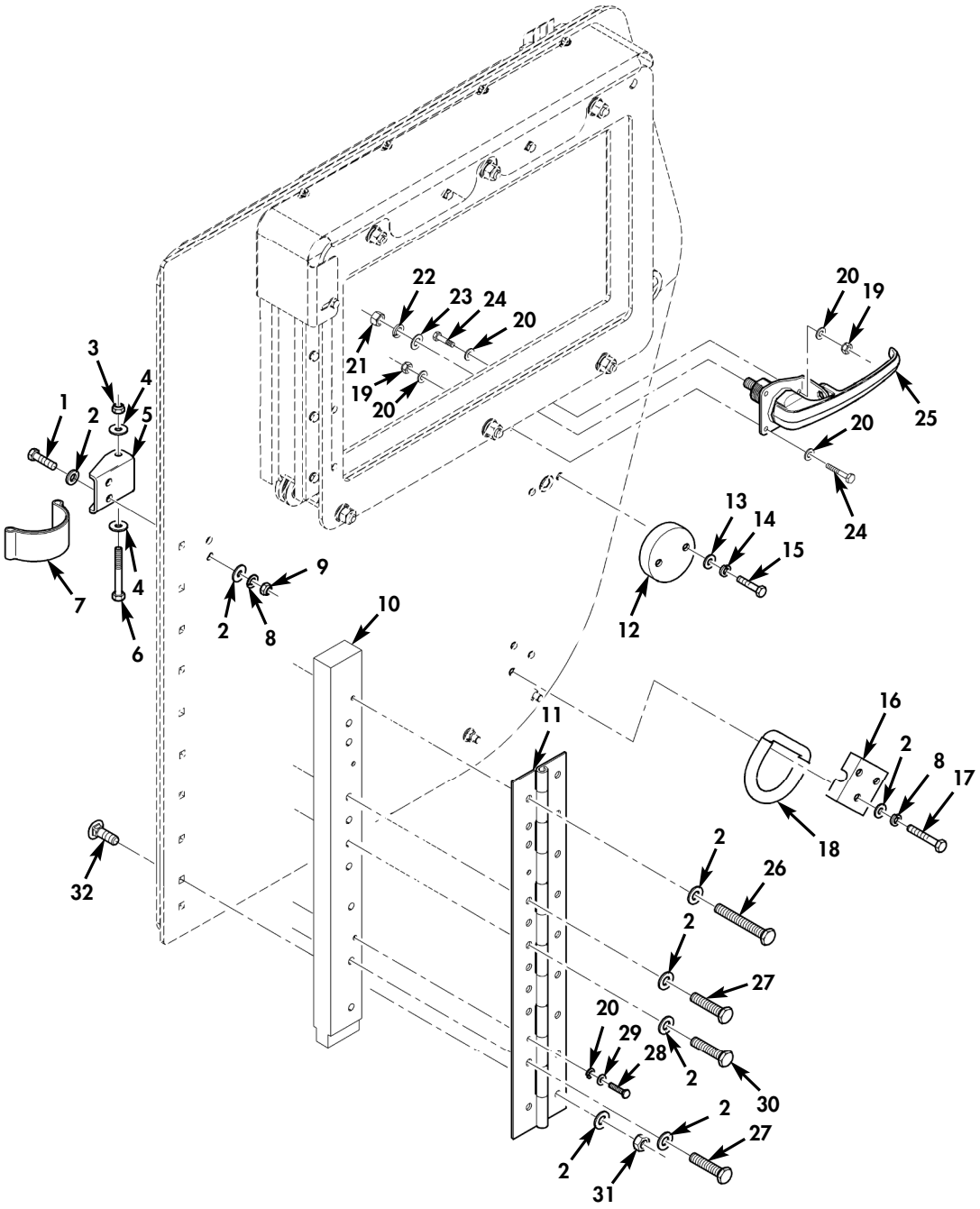

✱ QUANTITY SHOWN
REFLECTS ONE DOOR

Figure 167U. Standard Threat Door Hinges and Mounting Hardware (Sheet 2 of 2).

(1) ITEM NO	(2) SMR CODE	(3) NSN	(4) CAGEC	(5) PART NUMBER	(6) DESCRIPTION AND USABLE ON CODES(UOC)	(7) QTY
					GROUP 1801 BODY,CAB,HOOD,AND HULL ASSEMBLY	
					FIG. 167U STANDARD THREAT DOOR HINGES AND MOUNTING HARDWARE	
* 1	PAOZZ	5305002264831	80204	B1821BH038C150N	SCREW,CAP,HEXAGON H 3/8-16 X 1.50... UOC:TTA,TT1,UUA,UU2	2
* 2	PAOZZ	5310014124013	24617	2436163	WASHER,FLAT 3/8 REAR DOORS..... UOC:TTA,TT1,UUA,UU2	25
* 2	PAOZZ	5310014124013	24617	2436163	WASHER,FLAT 3/8 FRONT DOORS..... UOC:TTA,TT1,UUA,UU2	26
* 3	PAOZZ	5310008140673	81349	M45913/3-5CG8C	NUT,SELF-LOCKING,HE 5/16-18..... UOC:TTA,TT1,UUA,UU2	1
* 4	PAOZZ	5310009643415	19207	10910174-19	WASHER,FLAT 5/16..... UOC:TTA,TT1,UUA,UU2	2
* 5	PFOZZ	5340015546165	34623	6032075	BRACKET,DOUBLE ANGL L.H. OR R.H..... UOC:TTA,TT1,UUA,UU2	1
* 6	PAOZZ	5306002264838	80204	B1821BH031C325N	BOLT,MACHINE 5/16-18 X 3.25..... UOC:TTA,TT1,UUA,UU2	1
* 7	PFOZZ	5340015683829	34623	6040795	STRAP,WEBBING..... UOC:TTA,TT1,UUA,UU2	1
* 8	PAOZZ	5310000045033	80205	MS35338-46	WASHER,LOCK 3/8..... UOC:TTA,TT1,UUA,UU2	5
* 9	PFOZZ	5310015683956	3GMU7	DT 3816 AN	NUT,PLAIN,CAP 3/8-16..... UOC:TTA,TT1,UUA,UU2	2
* 10	PFOZZ	5340015690279	34623	6039228	PLATE,MOUNTING FRONT..... UOC:TTA,TT1,UUA,UU2	1
* 10	PAOZZ	5340015691330	34623	6039229	PLATE,MOUNTING REAR..... UOC:TTA,TT1,UU2	1
* 11	PAOZZ	2510015683982	34623	6035652	HINGE,DOOR,VEHICULA R.H.or L.H. FRONT OR REAR..... UOC:TTA,TT1,UUA,UU2	1
* 12	PFOZZ	5340015742171	34623	6035059	COVER,ACCESS..... UOC:TTA,TT1,UUA,UU2	1
* 13	PAOZZ	5310011191024	24617	2436162	WASHER,FLAT..... UOC:TTA,TT1,UUA,UU2	4
* 14	PAOZZ	5310004079566	80205	MS35338-45	WASHER,LOCK..... UOC:TTA,TT1,UUA,UU2	4
* 15	PAOZZ	5305007829489	80204	B1821BH038C200N	SCREW,CAP,HEXAGON H 3/8-16 X 2.00... UOC:TTA,TT1,UUA,UU2	2
* 16	PAOZZ	5340015634904	18876	PIF04510	ADAPTER,TIEDOWN FRONT OR REAR..... UOC:TTA,TT1,UUA,UU2	1
* 17	PAOZZ	5305005432866	80204	B1821BH038C250N	SCREW,CAP,HEXAGON H 3/8-16 X 2.50... UOC:TTA,TT1,UUA,UU2	3
* 18	PFOZZ	5340015634862	18876	PIF04511	HANDLE,BOW FRONT OR REAR..... UOC:TTA,TT1,UUA,UU2	1
* 19	PAOZZ	5310000614650	81349	M45913/3-4CG8C	NUT,SELF-LOCKING,HE 1/4-20..... UOC:TTA,TT1,UUA,UU2	3
* 20	PAOZZ	5310011023270	34623	2436161	WASHER,FLAT 1/4..... UOC:TTA,TT1,UUA,UU2	8

(1) ITEM NO	(2) SMR CODE	(3) NSN	(4) CAGEC	(5) PART NUMBER	(6) DESCRIPTION AND USABLE ON CODES(UOC)	(7) QTY
* 21	PAOZZ	5310014654525	24617	9418753	NUT,PLAIN,HEXAGON..... UOC:TTA,TT1,UUA,UU2	1
* 22	PAOZZ	5310005845272	80205	MS35338-48	WASHER,LOCK..... UOC:TTA,TT1,UUA,UU2	1
* 23	PAOZZ	5310011211703	24617	2436165	WASHER,FLAT..... UOC:TTA,TT1,UUA,UU2	1
* 24	PAOZZ	5305000712509	80204	B1821BH025C150N	SCREW,CAP,HEXAGON H 1/4-20 X 1.50... UOC:TTA,TT1,UUA,UU2	3
* 25	PAOZZ	2540015691135	19220	9-M8639-L	HANDLE,DOOR,VEHICUL L.H. OR R.H., FRONT OR REAR OUTER..... UOC:TTA,TT1,UUA,UU2	1
* 25	PAOZZ		19220	9-M8639-R	HANDLE,DOOR,VEHICUL L.H. OR R.H., FRONT OR REAR INNER..... UOC:TTA,TT1,UUA,UU2	1
* 26	PAOZZ	5305015690264	34623	6038458	SCREW,CAP,HEXAGON FRONT DOORS,3/8-16 X 6.00..... UOC:TTA,TT1,UUA,UU2	3
* 26	PAOZZ	5305008576886	80204	B1821BH038C450N	SCREW,CAP,HEXAGON H REAR DOORS,3/8-16 X 4.50..... UOC:TTA,TT1,UUA,UU2	4
* 27	PAOZZ	5305009640503	80204	B1821BH038C500N	SCREW,CAP,HEXAGON H FRONT DOORS,3/8-16 X 5.00..... UOC:TTA,TT1,UUA,UU2	7
* 27	PAOZZ	5305008465703	80204	B1821BH038C300N	SCREW,CAP,HEXAGON H REAR DOORS,3/8-16 X 3.00..... UOC:TTA,TT1,UUA,UU2	3
* 28	PAOZZ	5305002253843	80204	B1821BH025C100N	SCREW,CAP,HEXAGON H 1/4-20 X 1.00... UOC:TTA,TT1,UUA,UU2	2
* 29	PAOZZ	5310005825965	80205	MS35338-44	WASHER,LOCK 1/4..... UOC:TTA,TT1,UUA,UU2	5
* 30	PAOZZ	5305007813928	80204	B1821BH038C400N	SCREW,CAP,HEXAGON H 3/8-16 X 4.00,REAR DOORS ONLY..... UOC:TTA,TT1,UUA,UU2	2
* 31	PAOZZ	5310009359021	96906	MS51943-35	NUT,SELF-LOCKING,HE 3/8-16..... UOC:TTA,TT1,UUA,UU2	9
* 32	PFOZZ	5306015683377	34623	6035685	BOLT,MACHINE 3/8-16 X 1.125..... UOC:TTA,TT1,UUA,UU2	9

END OF FIGURE

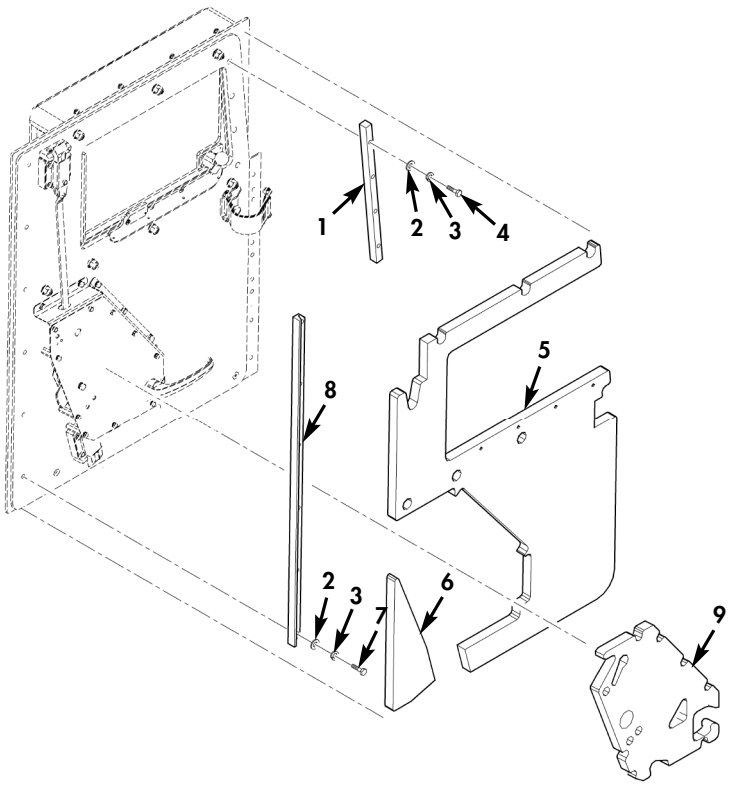

FRONT

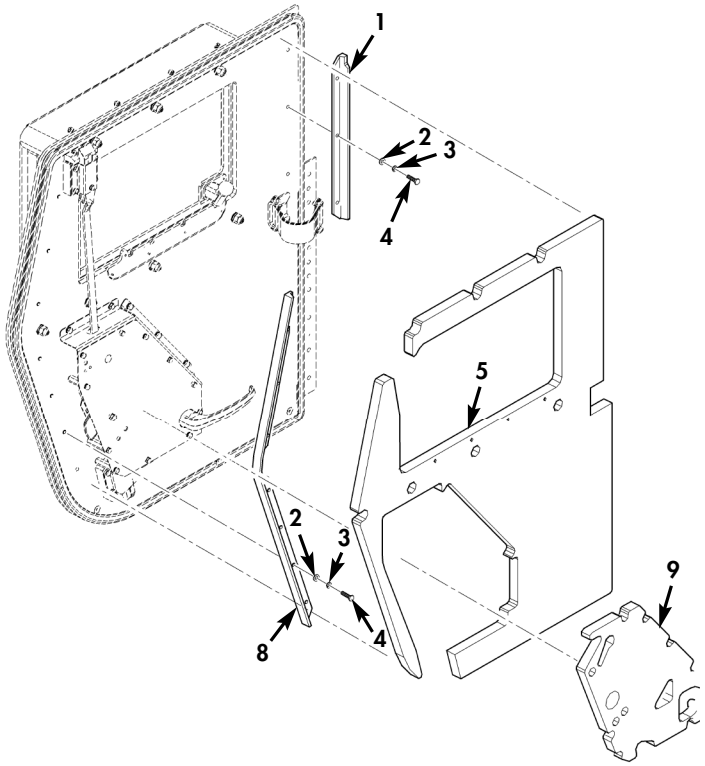

REAR

✱ QUANTITY SHOWN
REFLECTS ONE DOOR

Figure 167V. Front and Rear Standard Threat Door Insulation.

(1) ITEM NO	(2) SMR CODE	(3) NSN	(4) CAGEC	(5) PART NUMBER	(6) DESCRIPTION AND USABLE ON CODES(UOC)	(7) QTY
					GROUP 1801 BODY,CAB,HOOD,AND HULL ASSEMBLY	
					FIG. 167V FRONT AND REAR STANDARD THREAT DOOR INSULATION	
* 1	PFOZZ	5340015683976	34623	6039262	BRACKET,MOUNTING FRONT,L.H. OR R.H.. UOC:TTA,TT1,UUA,UU2	1
* 1	PFOZZ	5340015690628	34623	6039294	BRACKET,ANGLE REAR,L.H..... UOC:TTA,TT1,UU2	1
* 1	PFOZZ	5340015690641	34623	6039295	BRACKET,ANGLE REAR,R.H..... UOC:TTA,TT1,UU2	1
* 2	PAOZZ	5310011191024	24617	2436162	WASHER,FLAT 5/16..... UOC:TTA,TT1,UUA,UU2	10
* 3	PAOZZ	5310004079566	80205	MS35338-45	WASHER,LOCK 5/16..... UOC:TTA,TT1,UUA,UU2	10
* 4	PAOZZ	5306002264826	80204	B1821BH031C088N	BOLT,MACHINE REAR DOORS,5/16-18 X 7/8..... UOC:TTA,TT1,UU2	10
* 4	PAOZZ	5306002264826	80204	B1821BH031C088N	BOLT,MACHINE FRONT DOORS,5/16-18 X 7/8..... UOC:TTA,TT1,UUA,UU2	4
* 5	PFOZZ	2540015690289	34623	6039313	INSULATION,ACCOUSTI FRONT,L.H..... UOC:TTA,TT1,UUA,UU2	1
* 5	PFOZZ	2540015690659	34623	6039320	INSULATION,ACCOUSTI FRONT,R.H..... UOC:TTA,TT1,UUA,UU2	1
* 5	PFOZZ	2540015690651	34623	6039319	INSULATION,ACCOUSTI REAR,L.H..... UOC:TTA,TT1,UU2	1
* 5	PFOZZ	6510015683872	34623	6039321	INSULATION,PANEL,VE CAB REAR,R.H.... UOC:TTA,TT1,UU2	1
* 6	PAOZZ	2540015684021	34623	6039314	INSULATION,ACCOUSTI FRONT,L.H..... UOC:TTA,TT1,UUA,UU2	1
* 6	PAOZZ	2540015683395	34623	6039322	INSULATION,ACCOUSTI FRONT,R.H..... UOC:TTA,TT1,UUA,UU2	1
* 7	PAOZZ	5306002264825	80204	B1821BH031C075N	BOLT,MACHINE 5/16-18 X 3/4..... UOC:TTA,TT1,UUA,UU2	6
* 8	PFOZZ	5340015690271	34623	6039254	BRACKET,ANGLE FRONT,L.H. OR R.H..... UOC:TTA,TT1,UUA,UU2	1
* 8	PFOZZ	5340015687430	34623	6039304	BRACKET,ANGLE REAR,L.H..... UOC:TTA,TT1,UU2	1
* 8	PFOZZ	2590015683971	34623	6039305	BRACKET,ANGLE REAR,R.H..... UOC:TTA,TT1,UU2	1
* 9	PAOZZ	2540015686763	34623	6031467	INSULATION,ACCOUSTI L.H..... UOC:TTA,TT1,UUA,UU2	1
* 9	PAOZZ	2540015636892	34623	6031468	INSULATION,THERMAL R.H..... UOC:TTA,TT1,UUA,UU2	1

END OF FIGURE

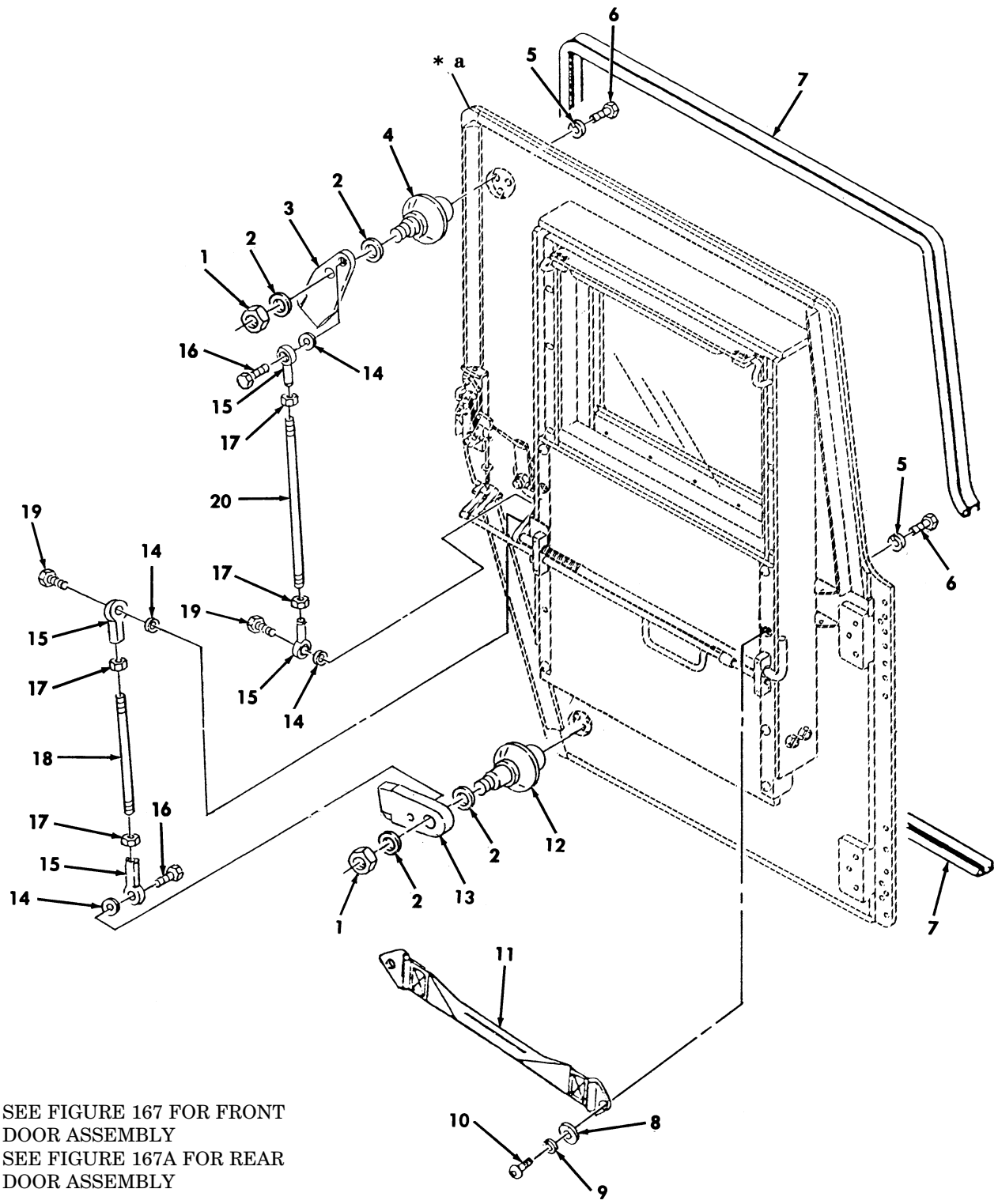

✻ **a** SEE FIGURE 167 FOR FRONT DOOR ASSEMBLY
✻ **a** SEE FIGURE 167A FOR REAR DOOR ASSEMBLY

Figure 168. Latching Mechanism, Locking Pawl, and Related Parts.

(1) ITEM NO	(2) SMR CODE	(3) NSN	(4) CAGEC	(5) PART NUMBER	(6) DESCRIPTION AND USABLE ON CODES(UOC)	(7) QTY
					GROUP 1801 BODY,CAB,HOOD AND HULL ASSEMBLY	
					FIG. 168 LATCHING MECHANISIM,LOCKING PAWL, AND RELATED PARTS	
1	PFOZZ		6W728	4397064-014	NUT,LOCK .625-18..... UOX:XBB	2
2	PAOZZ	5310014440226	6W728	4397005-046	WASHER,FLAT .750 X 1.00 X .031..... UOC"XBB	4
3	PFOZZ	3040014351358	6W728	4660895	PAWL UPPER FRONT,LEFT AND RIGHT.... UOC:XBB	1
3	PFOZZ	3040014351374	6W728	4660897	PAWL UPPER REAR,LEFT AND RIGHT..... UOC:XBB	1
4	PFOZZ	5330014354753	6W728	4660900	RING,BASE UPPER..... UOC:XBB	1
5	PAOZZ	5310014179942	6W728	4397004-007	WASHER,LOCK .312..... UOC:XBB	12
* 6	PAOZZ	5306000501238	80204	B1821BH031F075N	BOLT,MACHINE .312-24 X .75..... UOC:XBB	6
7	PAOZZ	5330014194425	6W728	4668918-000	SEAL,NONMETALLIC SP..... UOC:XBB	1
8	PAOZZ	5310014177333	6W728	4397005-008	WASHER,FLAT .219..... UOC:XBB	2
9	PAOZZ	5310014341385	6W728	4397004-005	WASHER,LOCK .190..... UOC:XBB	2
10	PAOZZ	5305014304706	6W728	4397018-074	SCREW,CAP SOCKET HE .75..... UOC:XBB	2
11	PAOZZ	5340014353792	6W728	4660941	STRAP,WEBBING..... UOC:XBB	1
12	PFOZZ	5330014353792	6W728	4660901	BASE,PIVOT FRONT LOWER,LEFT AND RIGHT..... UOC:XBB	1
* 12	PFOZZ	5330014359113	6W728	4660902	RING,BASE REAR LOWER..... UOC:XBB	1
13	PFOZZ	3040014759145	6W728	4660898	PAWL REAR.LOWER..... UOC:XBB	1
* 13	PFOZZ	3040014340720	6W728	4660896	PAWL FRONT LOWER..... UOC:XBB	1
14	PAOZZ	5310014194436	6W728	4397037-006	WASHER,LOCK .313..... UOC:XBB	4
15	PAOZZ	3120013939361	71041	CFHD-5	BEARING,PLAIN,ROD E SPHERICAL..... UOC:XBB	4
16	PAOZZ	5305000514076	80204	B1821BH031F100N	SCREW,CAP HEXAGON H 5/16-24 X 1.00. UOC:XBB	2
17	PAOZZ	5310004330940	6W728	4397003-002	NUT,PLAIN HEXAGON 5/16-24..... UOC:XBB	4
18	PFOZZ	3040014336212	6W728	4660911-012	CONNECTING LINK,RIG LOWER FRONT LEFT AND RIGHT..... UOC:XBB	1
* 18	PFOZZ	3040014336215	6W728	4660911-011	CONNECTING LINK,RIG LOWER REAR LEFT AND RIGHT..... UOC:XBB	1
* 19	PAOZZ	5306014339257	6W728	4397001-032	BOLT,MACHINE .312-24 X .75..... UOC:XBB	2

(1) ITEM NO	(2) SMR CODE	(3) NSN	(4) CAGEC	(5) PART NUMBER	(6) DESCRIPTION AND USABLE ON CODES(UOC)	(7) QTY
* 20	PFOZZ	3040014336556	6W728	4660911-014	CONNECTING LINK,RIG UPPER FRONT LEFT AND RIGHT..... UOC:XBB	1
* 20	PFOZZ	3040014336207	6W728	4660911-013	CONNECTING LINK,RIG UPPER REAR LEFT AND RIGHT..... UOC:XBB	1

END OF FIGURE

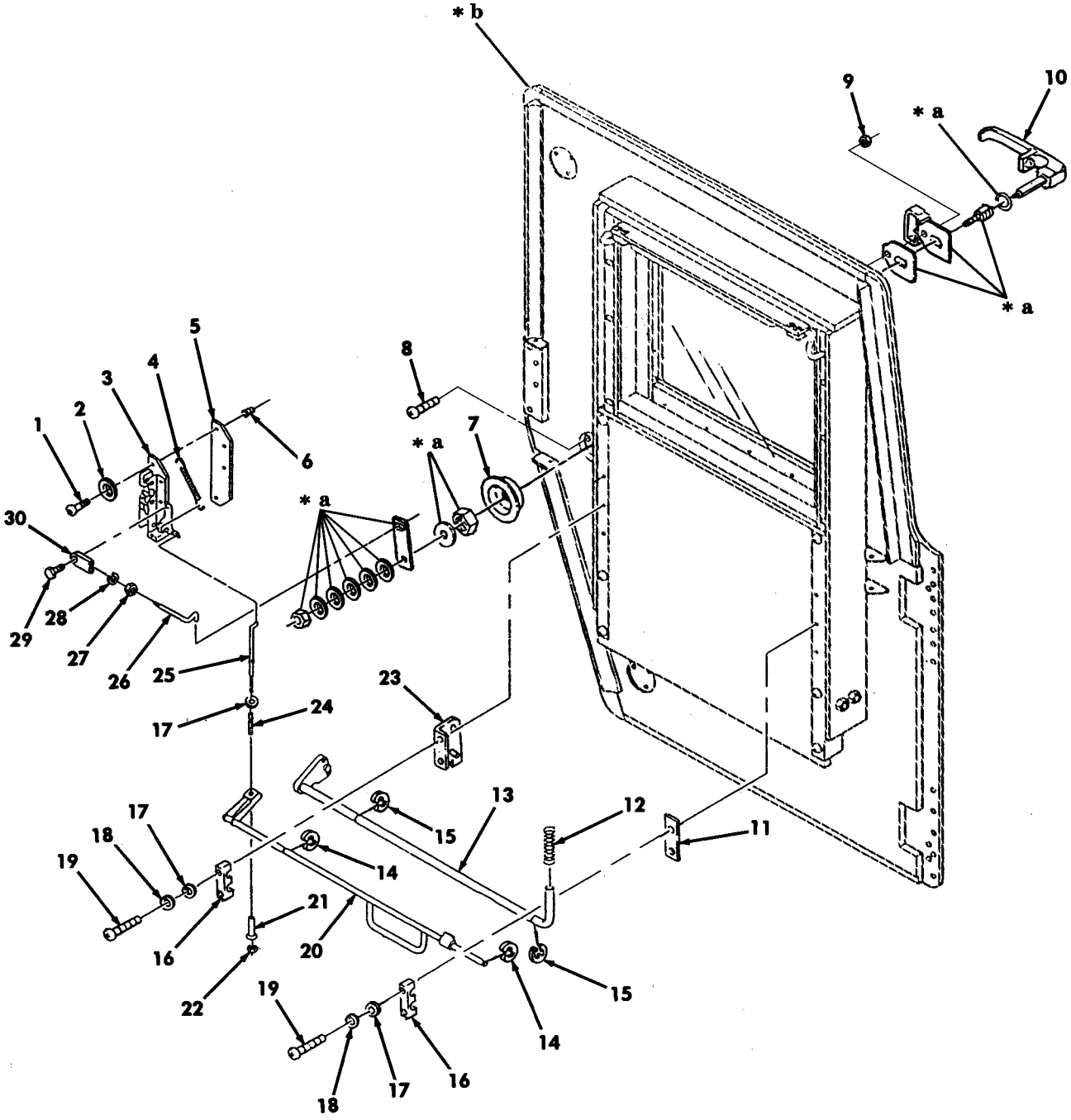

*** a** PART OF ITEM 10
*** b** SEE FIGURE 167 FOR FRONT DOOR ASSEMBLY

Figure 169. Door Handle and Related Parts.

(1) ITEM NO	(2) SMR CODE	(3) NSN	(4) CAGEC	(5) PART NUMBER	(6) DESCRIPTION AND USABLE ON CODES(UOC)	(7) QTY
					GROUP 1801 BODY,CAB,HOOD,AND HULL ASSEMBLY	
					FIG. 169 DOORHANDLE AND RELATED PARTS	
1	PAOZZ	5305014365414	6W728	4397018-094	SCREW,MACHINE 1/4-20 X 1.25..... UOC:XBB	4
2	PAOZZ	5310014330941	6W728	4397004-006	WASHER,LOCK #10..... UOC:XBB	4
3	PFOZZ	2540011974900	19220	9-300-U-L	LATCH,DOOR,VHEICUL L.H..... UOC:XBB	1
3	PFOZZ	2540011965317	19222	9-300-U-R	LOCK,DOOR,VEHICUL R.H..... UOC:XBB	1
4	PAOZZ	5306014456259	6W728	2-300-9	SPRING,HELICAL,COMP DOOR LATCH..... UOC:XBB	1
5	PFOZZ	5365014358425	6W728	4668657	SPACER,PLATE LOCK ASSEMBLY..... UOC:XBB	V
6	PAOZZ	5325013942414	78276	ALS7-420-165	INSERT,SCREW,THREAD 1/4-20..... UOC:XBB	1
7	PAOZZ	5325014177789	6W728	4668659	RING,RETAINING..... UOC:XBB	1
* 8	PAOZZ		6W728	1000349	SCREW,CAP 1/4-20 x 3/4..... UOC:XBB	1
* 9	PAOZZ	5310014398173	6W728	4397064-001	NUT,SELF-LOCKING,HE..... UOC:XBB	1
* 10	PAOZZ	2540014351329	6W728	4660310	HANDLE,DOOR,VEHICUL R.H..... UOC:XBB	2
* 10	PAOZZ	2540014351306	6W728	4660311	HANDLE,DOOR,VEHICUL L.H..... UOC:XBB	2
* 11	PAOZZ	5340014224255	6W728	4668516	PLATE,MOUNTING..... UOC:XBB	1
* 12	PAOZZ	5306014456258	6W728	4668946-005	SPRING,HELICAL,COMP 3.5 INCHES LONG UOC:XBB	2
* 13	PAOZZ	5342014353788	6W728	4660904	CONTROL,ROD L.H..... UOC:XBB	1
* 13	PAOZZ	5342014353787	6W728	4660905	CONTOLR,ROD R.H..... UOC:XBB	1
* 14	PAOZZ	5340014193312	6W728	4668945-001	CLIP,RETAINING .38 SHAFT..... UOC:XBB	2
* 15	PAOZZ	5340014449074	6W728	4668945-003	CLIP,RETAINING .50 SHAFT..... UOC:XBB	2
* 16	PFOZZ	5340014353789	6W728	4660912	CLIP-CLEVIS,ROD RET..... UOC:XBB	2
* 17	PAOZZ	5310014177333	6W728	4397005-008	WASHER,FLAT 7/32..... UOC:XBB	5
* 18	PAOZZ	5310014341385	6W728	4397004-005	WASHER,LOCK #10..... UOC:XBB	4
* 19	PAOZZ	5305014365402	6W728	4397018-077	SCREW,CAP HEXAGON H .190-24 X 1.25. UOC:XBB	4
* 20	PAOZZ	2540014349380	6W728	4660936	HANDLE,DOOR,VEHICUL FRONT,LEFT..... UOC:XBB	1
* 20	PAOZZ	2540014349382	6W728	4660937	HANDLE,DOOR,VEHICUL REAR,LEFT.....	1

(1) ITEM NO	(2) SMR CODE	(3) NSN	(4) CAGEC	(5) PART NUMBER	(6) DESCRIPTION AND USABLE ON CODES(UOC)	(7) QTY
* 20	PAOZZ	2540014349532	6W728	4660938	HANDLE,DOOR VEHICUL FRONT,RIGHT.... UOC:XBB	1
* 20	PAOZZ	2540014349639	6W728	4660939	HANDLE,DOOR VEHICUL REAR,RIGHT..... UOC:XBB	1
* 21	PAOZZ	5325014413160	6W728	4397076-001	EYELET,METALLIC..... UOC:XBB	1
* 22	PAOZZ	5310014373839	6W728	4397073-002	NUT,SELF-LOCKING,HE #10-24..... UOC:XBB	1
* 23	PFOZZ	5340014353791	6W728	4660906	BRACKET,ANGLE LEFT DETENT..... UOC:XBB	1
* 23	PFOZZ	5340014353790	6W728	4660907	BRACKET,ANGLE RIGHT DETENT..... UOC:XBB	1
* 24	PAOZZ	5306014441585	6W728	4668946-004	SPRING,HELICAL,COMP..... UOC:XBB	1
* 25	PAOZZ	3040014360894	6W728	4660944	CONNECTING LINK,RIG FRONT,LEFT AND RIGHT..... UOC:XBB	1
* 25	PAOZZ	3040014360897	6W728	4660952	CONNECTING LINK,RIG REAR,LEFT AND RIGHT..... UOC:XBB	1
* 26	PAOZZ	3040014207875	6W728	4668595	CONNECTING LINK,RIG FRONT..... UOC:XBB	1
* 26	PAOZZ	5340014192314	6W728	4668626	ROD,END THREADED REAR..... UOC:XBB	1
* 27	PAOZZ	5310014193336	6W728	4397002-022	NUT,PLAIN HEXAGON #8-32..... UOC:XBB	1
* 28	PAOZZ	5310000453299	80205	MS35338-42	WASHER,LOCK #8..... UOC:XBB	1
* 29	PAOZZ	5306014365429	6W728	4397051-037	BOLT,SHOULDER..... UOC:XBB	1
* 30	PFOZZ	5340014195185	6W728	4668596	CONNECTOR,ROD END..... UOC:XBB	1

END OF FIGURE

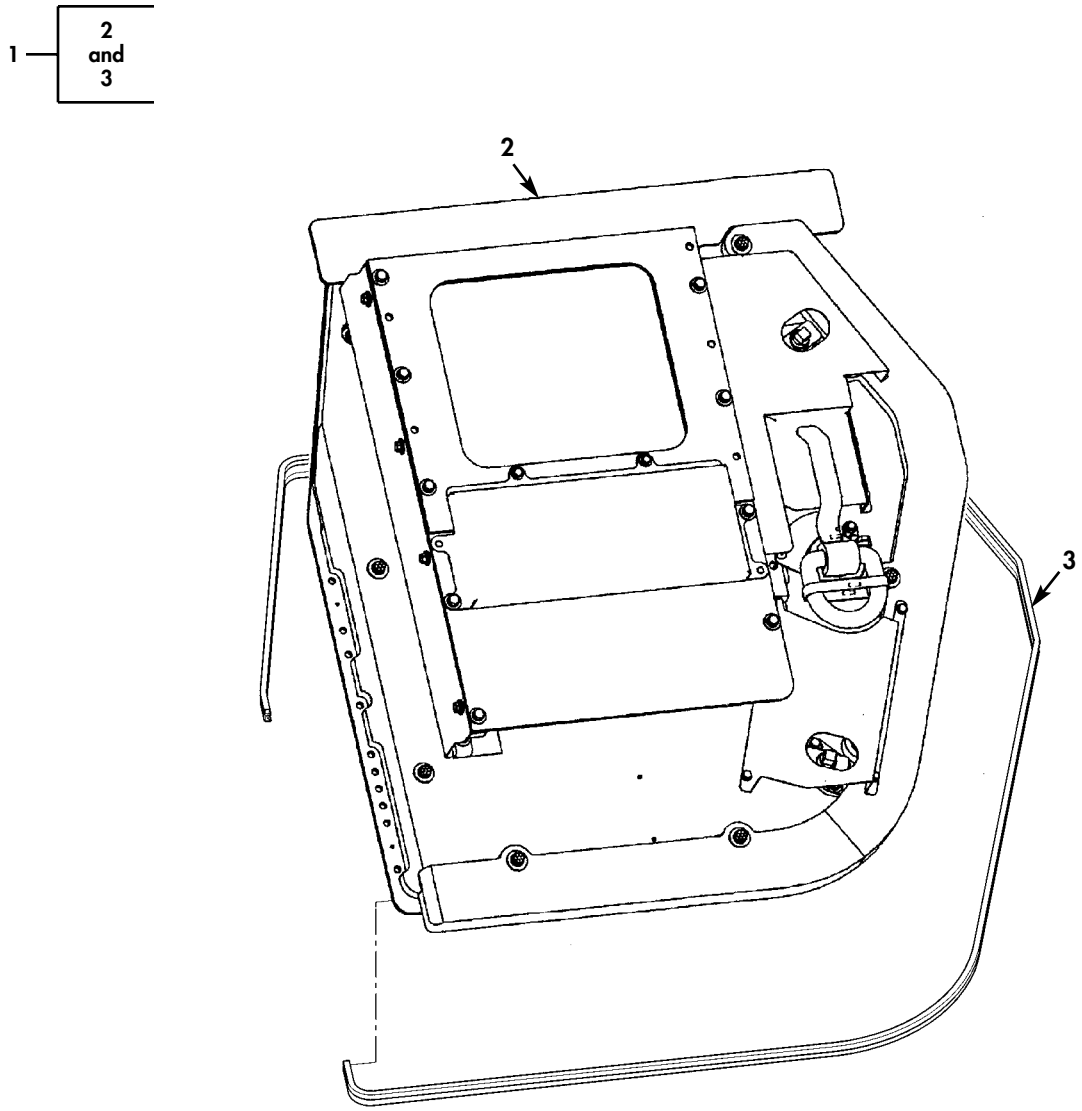

✱ QUANTITY SHOWN
REFLECTS ONE DOOR

Figure 169A. Frag 5 Kit, Rear Door Assembly (M1114).

(1) ITEM NO	(2) SMR CODE	(3) NSN	(4) CAGEC	(5) PART NUMBER	(6) DESCRIPTION AND USABLE ON CODES(UOC)	(7) QTY
					GROUP 1801 BODY,CAB,HOOD,AND HULL ASSEMBLY	
					FIG. 169A FRAG 5 KIT,REAR DOOR ASSEMBLY (M1114)	
* 1	PAOOF	2510015455859	6W728	6438245-200M1	DOOR,VEHICULAR WITH SEAL,L.H..... UOC:XBB	1
* 1	PAOOF	2510015455863	6W728	6438243-200M1	DOOR,VEHICULAR WITH SEAL,R.H..... UOC:XBB	1
* 2	XAOOF		6W728	6435095-200M1	.DOOR,VEHICULAR L.H.,REAR..... UOC:XBB	1
* 2	XAOOF		6W728	6435264-200M1	.DOOR,VEHICULAR R.H.,REAR..... UOC:XBB	1
* 3	MOOZZ		6W728	6437172-01M1	.SEAL,NONMETALLIC SP MAKE FROM SEAL,NONMETALLIC P/N 6437172-02M1,9 FEET 6 INCHES LONG..... UOC:XBB	1

END OF FIGURE

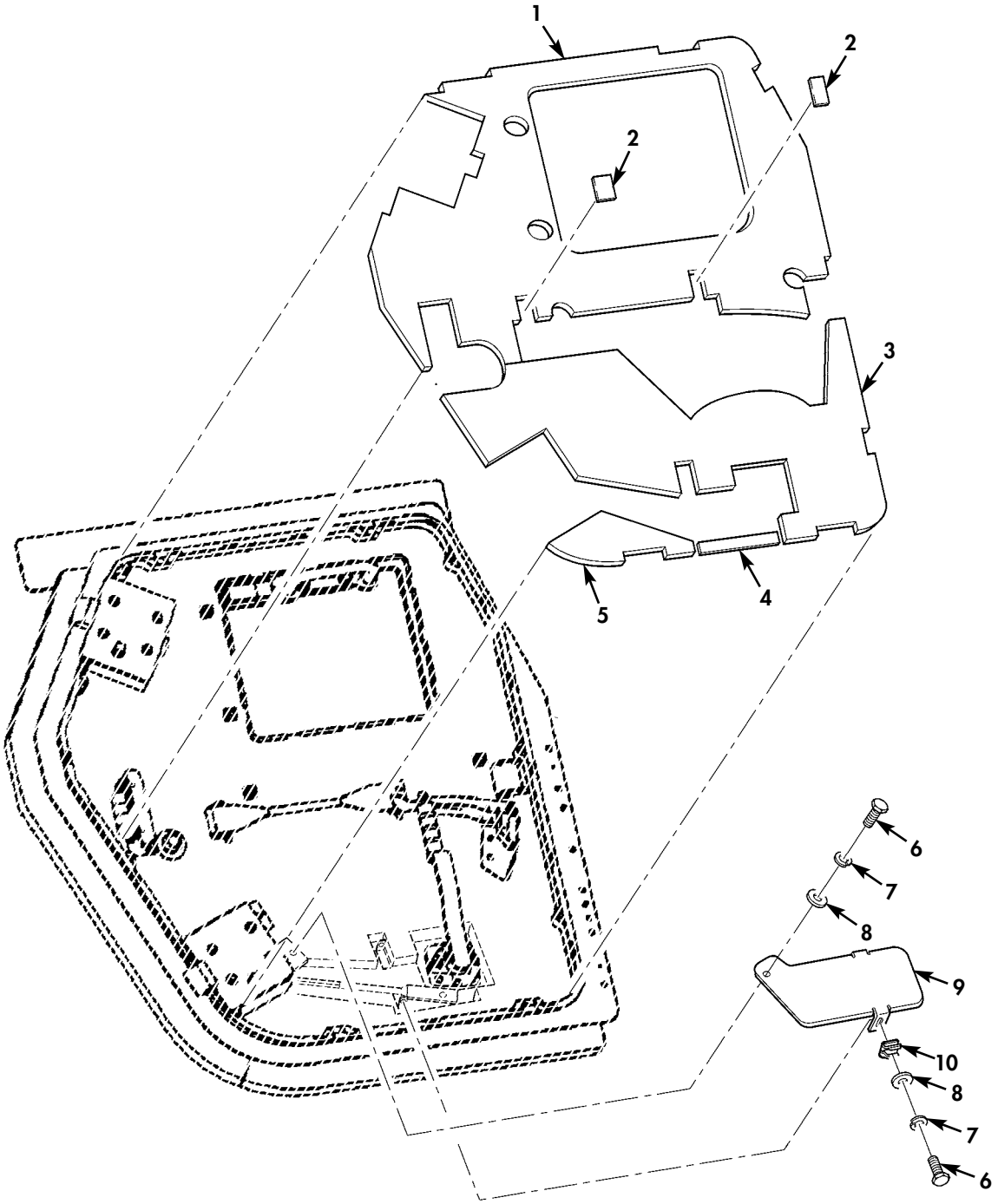

✱ QUANTITY SHOWN
REFLECTS ONE DOOR

Figure 169B. Frag 5 Kit, Rear Door Insulation and Cover (M1114).

(1) ITEM NO	(2) SMR CODE	(3) NSN	(4) CAGEC	(5) PART NUMBER	(6) DESCRIPTION AND USABLE ON CODES(UOC)	(7) QTY
					GROUP 1801 BODY,CAB,HOOD,AND HULL ASSEMBLY	
					FIG. 169B FRAG 5 KIT,REAR DOOR INSULATION AND COVER (M1114)	
* 1	PAOZZ		6W728	6435488-01M1	INSULATION,THERMAL L.H.,UPPER..... UOC:XBB	1
* 1	PAOZZ		6W728	6435688-01M1	INSULATION,THERMAL R.H.,UPPER..... UOC:XBB	1
* 2	PAOZZ		6W728	6435686-01M1	INSULATION,THERMAL FILLER..... UOC:XBB	2
* 3	PAOZZ		6W728	6435487-01M1	INSULATION,THERMAL L.H.,MIDDLE..... UOC:XBB	1
* 3	PAOZZ		6W728	6435687-01M1	INSULATION,THERMAL R.H.,MIDDLE..... UOC:XBB	1
* 4	PAOZZ		6W728	6435690-01M1	INSULATION,THERMAL L.H. OR R.H..... UOC:XBB	1
* 5	PAOZZ		6W728	6435689-01M1	INSULATION,THERMAL L.H. OR R.H LOWER..... UOC:XBB	1
* 6	PAOZZ	5306014307399	6W728	4397000-006	BOLT,MACHINE 1/4-20 X 3/4..... UOC:XBB	3
* 7	PAOZZ	5310014330941	6W728	4397004-006	WASHER,LOCK 1/4..... UOC:XBB	3
* 8	PAOZZ	5340014178995	6W728	4397005-011	WASHER,FLAT 1/4..... UOC:XBB	3
* 9	PFOZZ		6W728	6435318-01M1	COVER,ACCESS R.H..... UOC:XBB	1
* 9	PFOZZ		6W728	6435298-01M1	COVER,ACCESS L.H..... UOC:XBB	1
* 10	PAOZZ		39428	94850A129	NUT,CLIP-ON 1/4-20..... UOC:XBB	2

END OF FIGURE

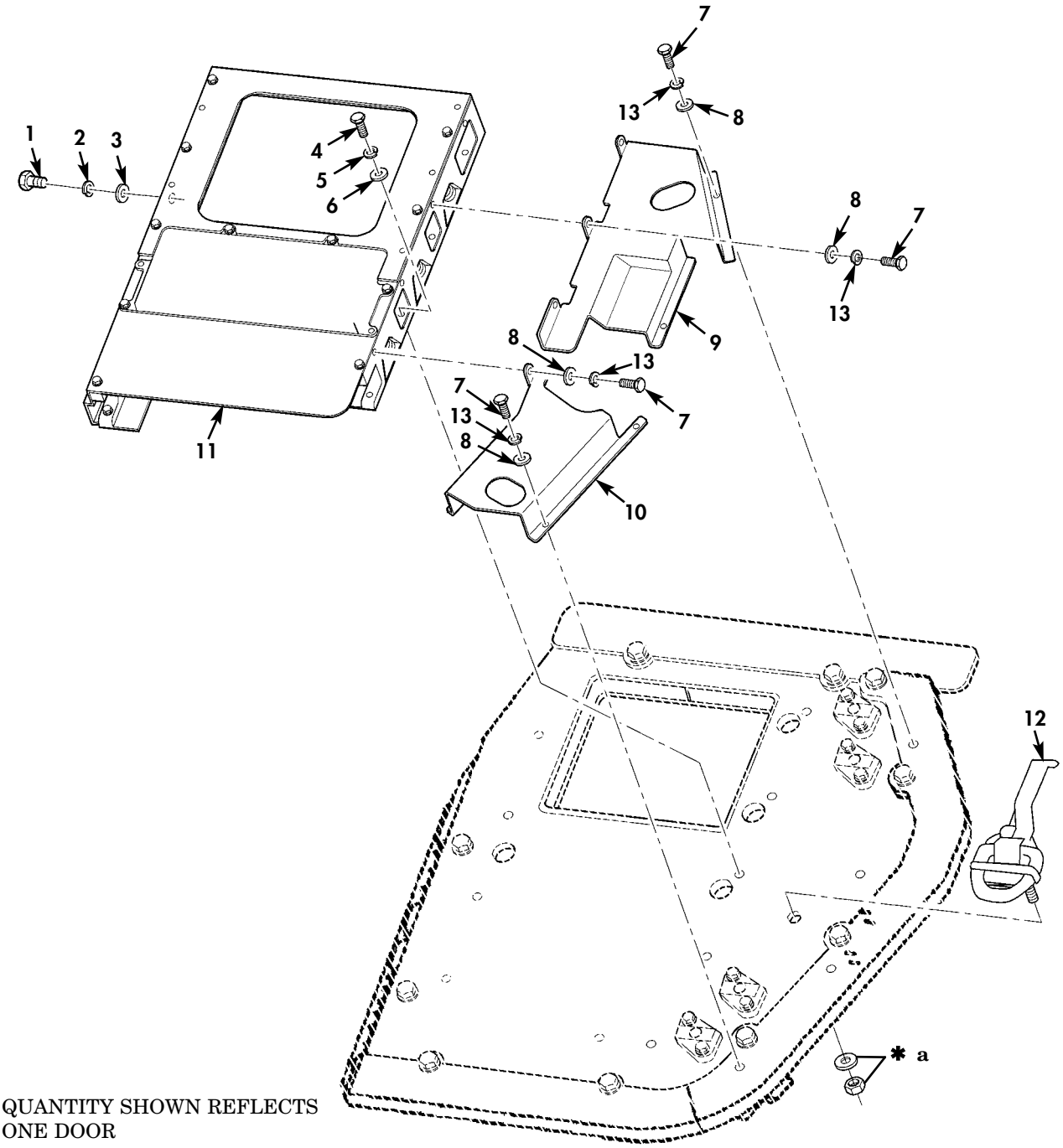

✱ QUANTITY SHOWN REFLECTS ONE DOOR

✱ **a** PART OF ITEM 12

✱ FOR BREAKDOWN OF ITEM 11 SEE FIGURE 169E

Figure 169C. Frag 5 Kit, Rear Door Covers and Related Hardware (M1114).

(1) ITEM NO	(2) SMR CODE	(3) NSN	(4) CAGEC	(5) PART NUMBER	(6) DESCRIPTION AND USABLE ON CODES(UOC)	(7) QTY
					GROUP 1801 BODY,CAB,HOOD,AND HULL ASSEMBLY	
					FIG. 169C FRAG 5 KIT,REAR DOOR COVERS AND RELATED HARDWARE (M1114)	
* 1	PAOZZ	5306002264829	80204	B1821BH031C125N	BOLT,MACHINE 5/16-18 X 1.25..... UOC:XBB	2
* 2	PAOZZ	5310014179942	6W728	4397004-007	WASHER,LOCK 5/16..... UOC:XBB	2
* 3	PAOZZ	5310014363741	6W728	4397005-013	WASHER,FLAT 5/16..... UOC:XBB	2
* 4	PAOZZ	5306014339198	6W728	4397000-065	BOLT,MACHINE 3/8-16 X 1.75..... UOC:XBB	8
* 5	PAOZZ	5310014177273	6W728	4397004-008	WASHER,LOCK 3/8..... UOC:XBB	8
* 6	PAOZZ	5310014363742	6W728	4397005-015	WASHER,FLAT 3/8..... UOC:XBB	8
* 7	PAOZZ	5306014307399	6W728	4397000-006	BOLT,MACHINE 1/4-20 X 3/4..... UOC:XBB	9
* 8	PAOZZ	5310014357784	6W728	4397005-010	WASHER,FLAT 1/4..... UOC:XBB	9
* 9	PAOZZ		6W728	6435309-200M1	COVER,ACCESS L.H.,UPPER..... UOC:XBB	1
* 9	PAOZZ		6W728	6435322-200M1	COVER,ACCESS R.H.,UPPER..... UOC:XBB	1
* 10	PAOZZ		6W728	6435310-200M1	COVER,ACCESS L.H.,UPPER..... UOC:XBB	1
* 10	PAOZZ		6W728	6435323-200M1	COVER,ACCESS R.H.,LOWER..... UOC:XBB	1
* 11	PAOZZ		6W728	6435303-200M1	WINDOW ASSEMBLY,VEH R.H..... UOC:XBB	1
* 11	PAOZZ		6W728	6435092-200M1	WINDOW ASSEMBLY,VEH L.H..... UOC:XBB	1
* 12	PAOZZ		6W728	6435226-200M1	HANDLE,PULL L.H..... UOC:XBB	1
* 12	PAOZZ		6W728	6435205-200M1	HANDLE,PULL R.H..... UOC:XBB	1
* 13	PAOZZ	5310014330941	6W728	4397004-006	WASHER,LOCK 1/4..... UOC:XBB	9

END OF FIGURE

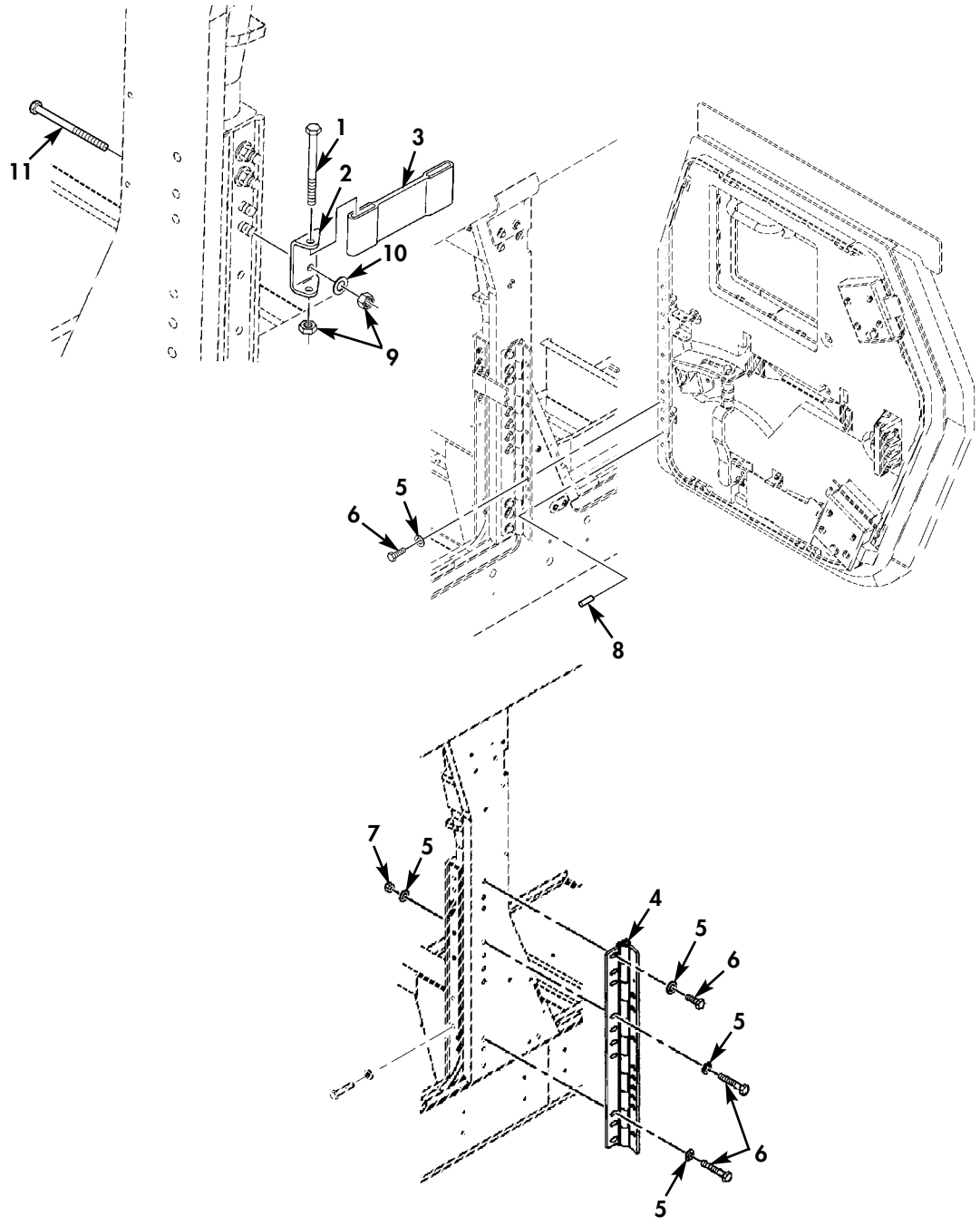

✱ QUANTITY SHOWN
REFLECTS ONE DOOR

Figure 169D. Frag 5 Kit, Rear Door Hinges, Safety Strap, and Related Hardware (M1114).

(1) ITEM NO	(2) SMR CODE	(3) NSN	(4) CAGEC	(5) PART NUMBER	(6) DESCRIPTION AND USABLE ON CODES(UOC)	(7) QTY
					GROUP 1801 BODY,CAB,HOOD,AND HULL ASSEMBLY	
					FIG. 169D FRAG 5 KIT,REAR DOOR HINGES,SAFETY STRAP,AND RELATED HARDWARE (M1114)	
* 1	PAOZZ	5306002264837	80204	B1821BH031C300N	BOLT,MACHINE 5/16-18 X 3.00..... UOC:XBB	1
* 2	PAOZZ		6W728	6435652-01M1	BRACKET,MOUNTING DOOR SAFETY STRAP.. UOC:XBB	1
* 3	PAOZZ		6W728	6435262-01M1	STRAP,WEBBING..... UOC:XBB	1
* 4	PAOZZ		6W728	6435094-01M1	HINGE,DOOR,VEHICULA L.H..... UOC:XBB	1
* 4	PAOZZ		6W728	6435234-01M1	HINGE,DOOR,VEHICULA R.H..... UOC:XBB	1
* 5	PAOZZ	5310014363742	6W728	4397005-015	WASHER,FLAT 3/8..... UOC:XBB	20
* 6	PAOZZ	5305009908632	80204	B1821BH038C375N	SCREW,CAP,HEXAGON H 3/8-16 X 3.75... UOC:XBB	20
* 7	PAOZZ	5310014398177	6W728	4397064-005	NUT,SELF-LOCKING,HE 3/8-16..... UOC:XBB	20
* 8	PFOZZ		6W728	4397025-026	PIN,STRAIGHT HEADLE..... UOC:XBB	2
* 9	PAOZZ	5310014398172	6W728	4397064-003	NUT,SELF-LOCKING,HE 5/16-18..... UOC:XBB	3
* 10	PAOZZ	5310014363741	6W728	4397005-013	WASHER,FLAT 5/16..... UOC:XBB	2
* 11	PAOZZ	5306002264843	80204	B1821BH031C450N	BOLT,MACHINE 5/16-18 X 4.50..... UOC:XBB	2

END OF FIGURE

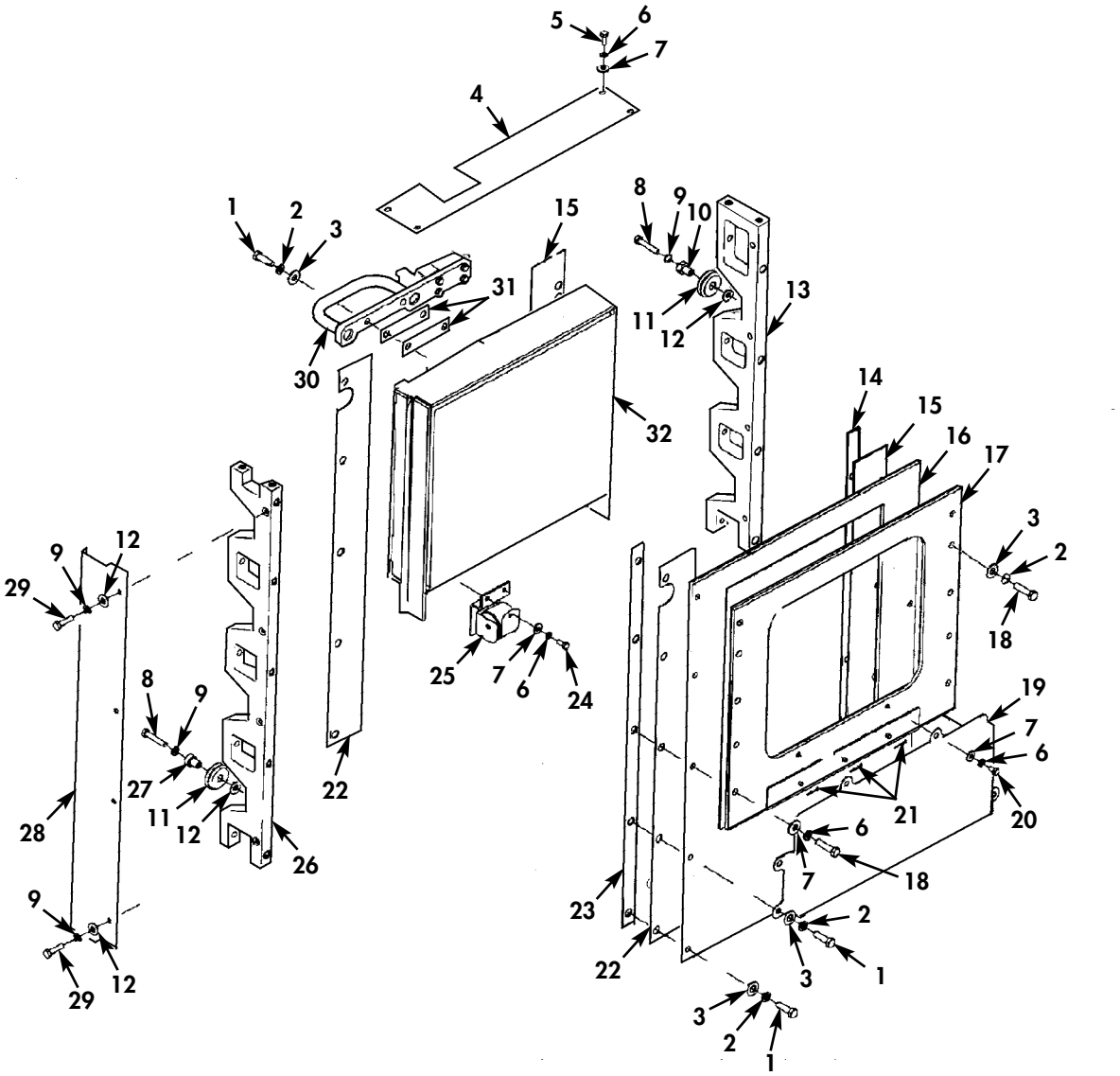

✱ QUANTITY SHOWN
REFLECTS ONE DOOR

Figure 169E. Frag 5 Kit, Window Assembly (M1114).

(1) ITEM NO	(2) SMR CODE	(3) NSN	(4) CAGEC	(5) PART NUMBER	(6) DESCRIPTION AND USABLE ON CODES(UOC)	(7) QTY
					GROUP 1801 BODY,CAB,HOOD,AND HULL ASSEMBLY	
					FIG. 169E FRAG 5 KIT,WINDOW ASSEMBLY (M1114)	
* 1	PAOZZ	5306014339197	6W728	4397000-062	BOLT,MACHINE 3/8-16 X 1.25..... UOC:XBB	6
* 2	PAOZZ	5310014177273	6W728	4397004-008	WASHER,LOCK 3/8..... UOC:XBB	11
* 3	PAOZZ	5310014363742	6W728	4397005-015	WASHER,FLAT 3/8..... UOC:XBB	11
* 4	PAOZZ		6W728	6435139-200M1	COVER,ACCESS L.H. OR R.H..... UOC:XBB	1
* 5	PAOZZ	5306014307399	6W728	4397000-006	BOLT,MACHINE 1/4-20 X 3/4..... UOC:XBB	4
* 6	PAOZZ	5310014330941	6W728	4397004-006	WASHER,LOCK 1/4..... UOC:XBB	13
* 7	PAOZZ	5340014178995	6W728	4397005-011	WASHER,FLAT 1/4..... UOC:XBB	13
* 8	PAOZZ		6W728	4397000-039	SCREW,CAP,HEXAGON H 5/16-18 X 1.75.. UOC:XBB	7
* 9	PAOZZ	5310014179942	6W728	4397004-007	WASHER,LOCK 5/16..... UOC:XBB	11
* 10	PAOZZ	3120014202257	6W728	4668956-001	BUSHING,SLEEVE..... UOC:XBB	3
* 11	PAOZZ	5340014191331	6W728	4668955	WHEEL,SOLID,METALLI..... UOC:XBB	7
* 12	PAOZZ	5310014363741	6W728	4397005-013	WASHER,FLAT 5/16..... UOC:XBB	11
* 13	PAOZZ		6W728	6435141-200M1	RAIL,SIDE LIGHT REAR..... UOC:XBB	1
* 14	XDOZZ		6W728	6437013-200M1	SHIM L.H. OR R.H.,REAR..... UOC:XBB	1
* 15	PAOZZ		6W728	6435488-200M1	GLIDE STRIP L.H. OR R.H.,FRONT..... UOC:XBB	1
* 16	XAOZZ		6W728	6435307-200M1	PLATE,RETAINER..... UOC:XBB	1
* 17	XAOZZ		6W728	6435149-200M1	FRAME,WINDOW VEHICU..... UOC:XBB	1
* 18	PAOZZ	5305014366377	6W728	4397000-064	SCREW,CAP,HEXAGON H 3/8-16 X 1.50... UOC:XBB	5
* 19	PAOZZ		6W728	6435151-200M1	COVER,ACCESS..... UOC:XBB	1
* 20	PAOZZ		6W728	4397000-003	SCREW,CAP,HEXAGON H 1/4-20 X 1/2.... UOC:XBB	2
* 21	PAOZZ	5315014338419	6W728	4397007-008	PIN,COTTER..... UOC:XBB	3
* 22	PAOZZ		6W728	6435645-200M1	GLIDE STRIP L.H. OR R.H.,REAR..... UOC:XBB	1
* 23	XDOZZ		6W728	6437012-200M1	SHIM L.H. OR R.H.,FRONT..... UOC:XBB	1
* 24	PAOZZ	5306014339180	6W728	4397000-005	BOLT,MACHINE 1/4-20 X 5/8..... UOC:XBB	6

(1) ITEM NO	(2) SMR CODE	(3) NSN	(4) CAGEC	(5) PART NUMBER	(6) DESCRIPTION AND USABLE ON CODES(UOC)	(7) QTY
* 25	PAOZZ	2540014186825	6W728	4668639	SPRING ASSEMBLY,WIN..... UOC:XBB	3
* 26	PAOZZ		6W728	6435140-200M1	RAIL,SIDE LIGHT FRONT..... UOC:XBB	1
* 27	PAOZZ	3120014199184	6W728	4668956-002	BUSHING,SLEEVE..... UOC:XBB	4
* 28	PAOZZ		6W728	6435156-200M1	COVER,ACCESS L.H. OR R.H..... UOC:XBB	1
* 29	PAOZZ	5306014339183	6W728	4397000-036	BOLT,MACHINE 5/16-18 X 1.25..... UOC:XBB	4
* 30	PAOZZ		6W728	6435157-01M1	HANDLE ASSEMBLY L.H..... UOC:XBB	1
* 30	PAOZZ		6W728	6435100-200M1	HANDLE ASSEMBLY R.H..... UOC:XBB	1
* 31	PAOZZ		6W728	6435263-200M1	SPACER,PLATE..... UOC:XBB	V
* 32	PAOZZ	2510015455856	6W728	6435146-200M1	WINDOW,VEHICULAR L.H. OR R.H..... UOC:XBB	1

END OF FIGURE

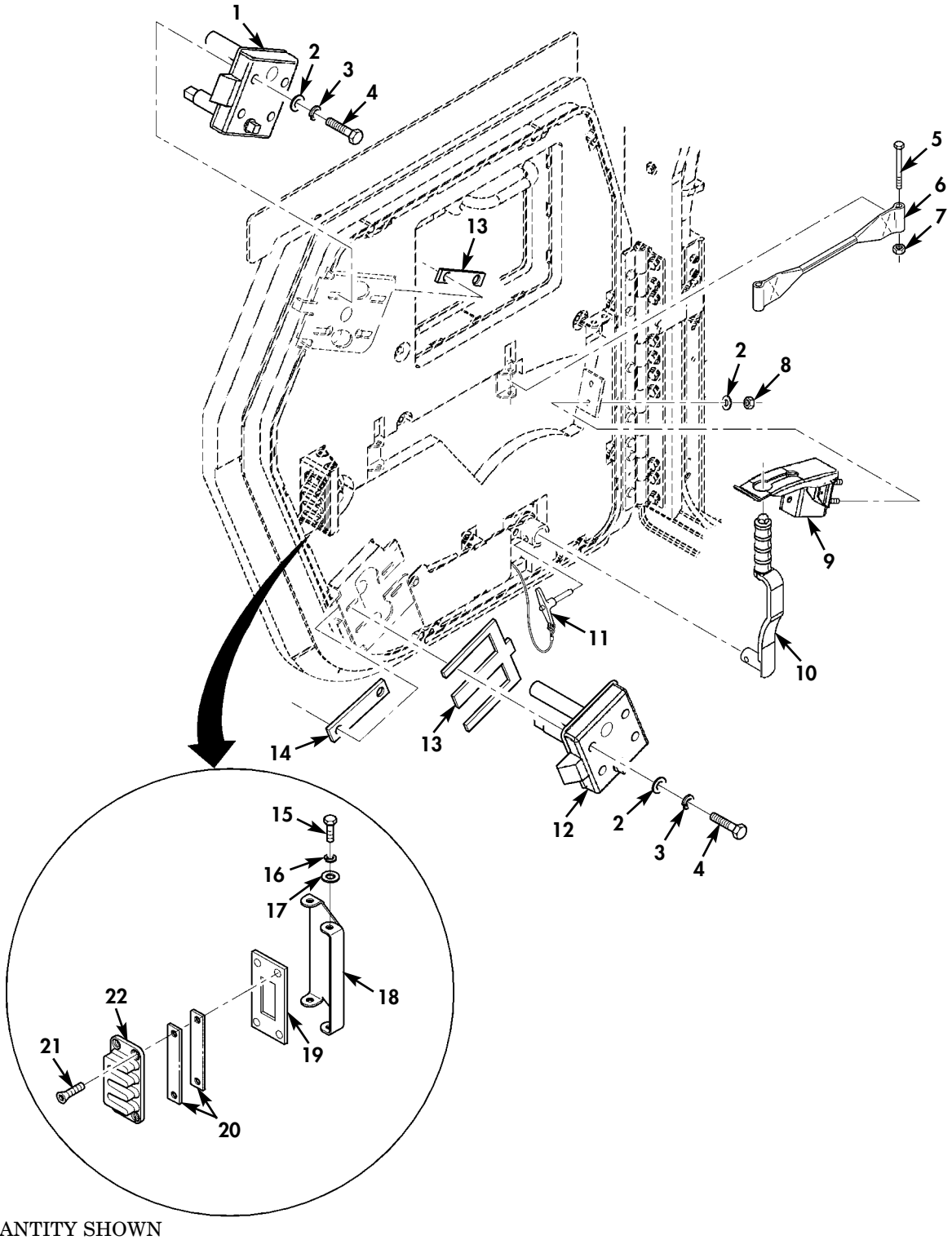

✱ QUANTITY SHOWN
REFLECTS ONE DOOR

Figure 169F. Frag 5 Kit, Rear Door Slam Latches and Related Hardware (M1114).

(1) ITEM NO	(2) SMR CODE	(3) NSN	(4) CAGEC	(5) PART NUMBER	(6) DESCRIPTION AND USABLE ON CODES(UOC)	(7) QTY
					GROUP 1801 BODY,CAB,HOOD,AND HULL ASSEMBLY	
					FIG. 169F FRAG 5 KIT,REAR DOOR SLAM LATCHES AND RELATED HARDWARE(M1114)	
* 1	PAOZZ		19220	16874-RTL-75	LATCH,DOOR,VEHICULA L.H.,TOP..... UOC:XBB	1
* 1	PAOZZ		19220	16874-RTR-75	LATCH,DOOR,VEHICULA R.H.,TOP..... UOC:XBB	1
* 2	PAOZZ	5340014178995	6W728	4397005-011	WASHER,FLAT 1/4..... UOC:XBB	10
* 3	PAOZZ	5310014330941	6W728	4397004-006	WASHER,LOCK 1/4..... UOC:XBB	8
* 4	PAOZZ	5306014339187	6W728	4397000-015	BOLT,MACHINE 1/4-20 X 2.25..... UOC:XBB	4
* 5	PAOZZ	5306002264837	80204	B1821BH031C300N	BOLT,MACHINE 5/16-18 X 3.00..... UOC:XBB	1
* 6	PAOZZ		6W728	6435629-01M1	STRAP,WEBBING..... UOC:XBB	1
* 7	PAOZZ	5310014398172	6W728	4397064-003	NUT,SELF-LOCKING,HE 5/16-18..... UOC:XBB	1
* 8	PAOZZ	5310014398173	6W728	4397064-001	NUT,SELF-LOCKING,HE 1/4-20 ..... UOC:XBB	2
* 9	PAOZZ		6W728	6435405-01M1	LEVER,LOCK ASSEMBLY..... UOC:XBB	1
* 10	PAOZZ		19220	16875-52L-75	LEVER,MANUAL CONTRO L.H..... UOC:XBB	1
* 10	PAOZZ		19220	16875-52R-75	LEVER,MANUAL CONTRO R.H..... UOC:XBB	1
* 11	PAOZZ		19220	AL-16875-SS85	PIN,QUICK RELEASE..... UOC:XBB	1
* 12	PAOZZ		19220	16874-RBR-75	LATCH,DOOR,VEHICULA R.H.,BOTTOM..... UOC:XBB	1
* 12	PAOZZ		19220	16874-RBL-75	LATCH,DOOR,VEHICULA L.H.,BOTTOM..... UOC:XBB	1
* 13	PAOZZ		6W728	6435341-01M1	SPACER,PLATE..... UOC:XBB	V
* 14	PAOZZ		6W728	6435628-01M1	SPACER,PLATE..... UOC:XBB	4
* 15	PAOZZ	5305014464660	6W728	4397018-072	SCREW,CAP,SOCKET HE .190-24 X 1/.... UOC:XBB	4
* 16	PAOZZ	5310014341385	6W728	4397004-005	WASHER,LOCK .190..... UOC:XBB	4
* 17	PAOZZ	5310014177333	6W728	4397005-008	WASHER,FLAT 1/4..... UOC:XBB	4
* 18	PAOZZ		6W728	6435317-01M1	COVER,ACCESS..... UOC:XBB	2
* 19	PAOZZ		6W728	6435313-01M1	PLATE,MOUNTING..... UOC:XBB	1
* 20	PAOZZ		6W728	6435342-01M1	SPACER,PLATE REAR DOOR GUIDE,11 GAGE UOC:XBB	V
* 21	PAOZZ		6W728	4397031-093	SCREW,CAP,SOCKET HE 1/4-20 X 1.00... UOC:XBB	4

(1) ITEM NO	(2) SMR CODE	(3) NSN	(4) CAGEC	(5) PART NUMBER	(6) DESCRIPTION AND USABLE ON CODES(UOC)	(7) QTY
* 22	PAOZZ		6W728	6435314-01M1	STRIKE,CATCH..... UOC:XBB	1

END OF FIGURE

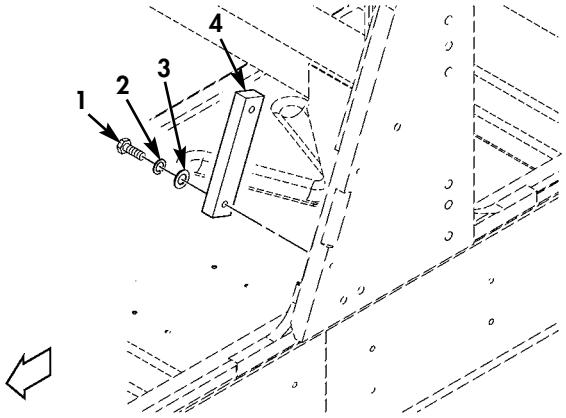

FRONT

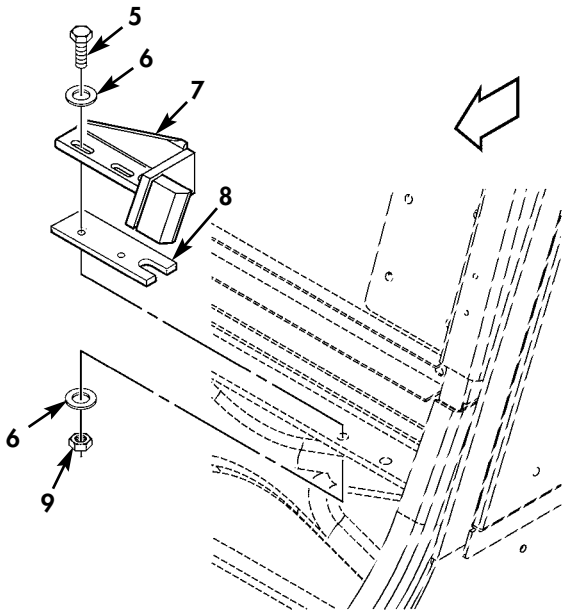

✱ QUANTITY SHOWN
REFLECTS ONE SIDE

REAR

Figure 169G. Frag 5 Kit, Door Latch Ramps and Mounting Hardware (M1114).

(1) ITEM NO	(2) SMR CODE	(3) NSN	(4) CAGEC	(5) PART NUMBER	(6) DESCRIPTION AND USABLE ON CODES(UOC)	(7) QTY
					GROUP 1801 BODY,CAB,HOOD,AND HULL ASSEMBLY	
					FIG. 169G FRAG 5 KIT,DOOR LATCH RAMPS AND MOUNTING HARDWARE (M1114)	
* 1	PAOZZ	5306014339213	6W728	4397000-038	BOLT,MACHINE 5/16-18 X 1.50..... UOC:XBB	2
* 2	PAOZZ	5310014179942	6W728	4397004-007	WASHER,LOCK 5/16..... UOC:XBB	2
* 3	PAOZZ	5310014363741	6W728	4397005-013	WASHER,FLAT 5/16..... UOC:XBB	2
* 4	PAOZZ		6W728	6435293-01M1	STRIKE,CATCH..... UOC:XBB	1
* 5	PAOZZ	5306014365392	6W728	4397000-010	BOLT,MACHINE 1/4-20 X 1.25..... UOC:XBB	2
* 6	PAOZZ	5340014178995	6W728	4397005-011	WASHER,FLAT 1/4..... UOC:XBB	4
* 7	PAOZZ		6W728	6435659-01M1	STRIKE,CATCH L.H.,LOWER..... UOC:XBB	1
* 7	PAOZZ		6W728	6435669-01M1	STRIKE,CATCH R.H.,LOWER..... UOC:XBB	1
* 8	PAOZZ		6W728	6435658-01M1	SPACER,PLATE L.H..... UOC:XBB	1
* 8	PAOZZ		6W728	6435668-01M1	SPACER,PLATE R.H..... UOC:XBB	1
* 9	PAOZZ	5310014398173	6W728	4397064-001	NUT,SELF-LOCKING,HE 1/4-20..... UOC:XBB	2

END OF FIGURE

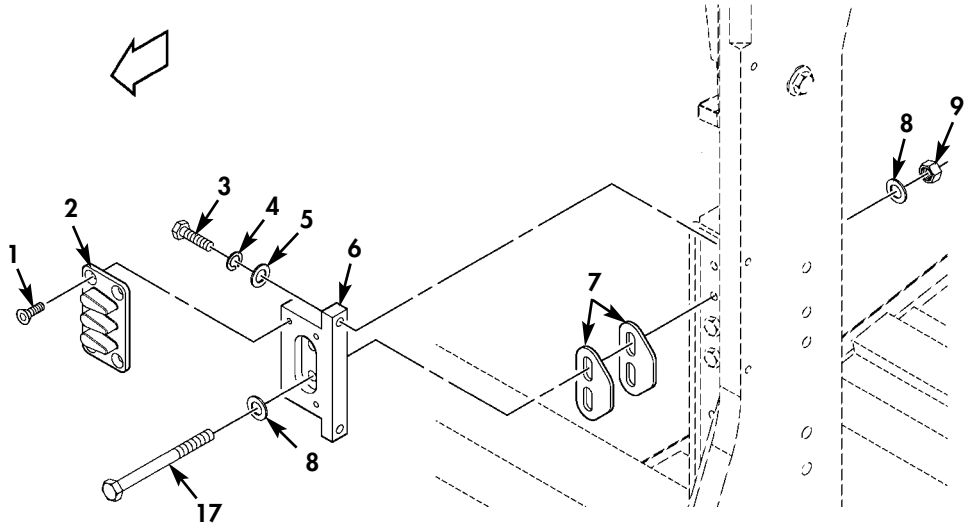

FRONT

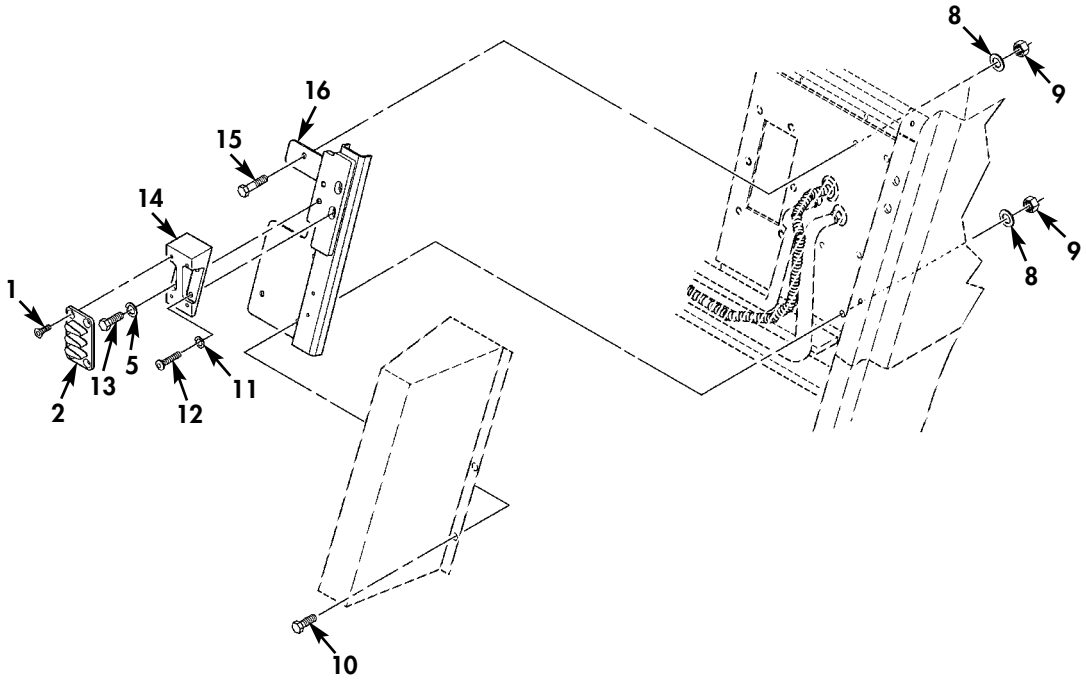

✱ QUANTITY SHOWN REFLECTS ONE DOOR

REAR

Figure 169H. Frag 5 Kit, Front and Rear Door Guides (M1114).

(1) ITEM NO	(2) SMR CODE	(3) NSN	(4) CAGEC	(5) PART NUMBER	(6) DESCRIPTION AND USABLE ON CODES(UOC)	(7) QTY
					GROUP 1801 BODY,CAB,HOOD,AND HULL ASSEMBLY	
					FIG. 169H FRAG 5 KIT, FRONT AND REAR DOOR GUIDES (M1114)	
* 1	PAOZZ		6W728	4397031-089	SCREW,SOCKET HEAD 1/4-20 X 1/2..... UOC:XBB	8
* 2	PAOZZ		6W728	6437133-01M1	STRIKE,CATCH MALE,L.H. AND R.H..... UOC:XBB	2
* 3	PAOZZ	5306002264832	80204	B1821BH031C175N	BOLT,MACHINE 5/16-18 X 1.75..... UOC:XBB	2
* 4	PAOZZ	5310014179942	6W728	4397004-007	WASHER,LOCK 5/16..... UOC:XBB	2
* 5	PAOZZ	5310014229287	6W728	4397005-012	WASHER,FLAT 5/16..... UOC:XBB	2
* 6	PAOZZ		6W728	6435228-01M1	PLATE,MOUNTING L.H. AND R.H..... UOC:XBB	2
* 7	PAOZZ	5365015248800	6W728	4668621-002	SHIM..... UOC:XBB	V
* 8	PAOZZ	5310014363741	6W728	4397005-013	WASHER,FLAT 5/16..... UOC:XBB	7
* 9	PAOZZ	5310014398172	6W728	4397064-003	NUT,SELF-LOCKING,HE 5/16-18..... UOC:XBB	5
* 10	PAOZZ	5305014206637	6W728	4397000-034	SCREW,CAP,HEXAGON H 5/16-18 X 1.00.. UOC:XBB	2
* 11	PAOZZ	5310014330941	6W728	4397004-006	WASHER,LOCK 1/4..... UOC:XBB	4
* 12	PAOZZ		6W728	4397018-096	SCREW,MACHINE 1/4-20 X 1.75..... UOC:XBB	4
* 13	PAOZZ	5305015304758	6W728	4397000-032	SCREW,CAP,HEXAGON H 5/16-18 X 3/4... UOC:XBB	4
* 14	PAOZZ		6W728	6435491-01M1	BRACKET,VEHICULAR C L.H..... UOC:XBB	1
* 14	PAOZZ		6W728	6435676-01M1	BRACKET,VEHICULAR C R.H..... UOC:XBB	1
* 15	PAOZZ	5306014339183	6W728	4397000-036	BOLT,MACHINE 5/16-18 X 1.25..... UOC:XBB	1
* 16	PAOZZ		6W728	6435680-01M1	BRACKET,VEHICULAR C L.H..... UOC:XBB	1
* 16	PAOZZ		6W728	6435679-01M1	BRACKET,VEHICULAR C R.H..... UOC:XBB	1
* 17	PAOZZ	5306002264845	80204	B1821BH031C500N	BOLT,MACHINE 5/16-18 X 5.00..... UOC:XBB	2

END OF FIGURE

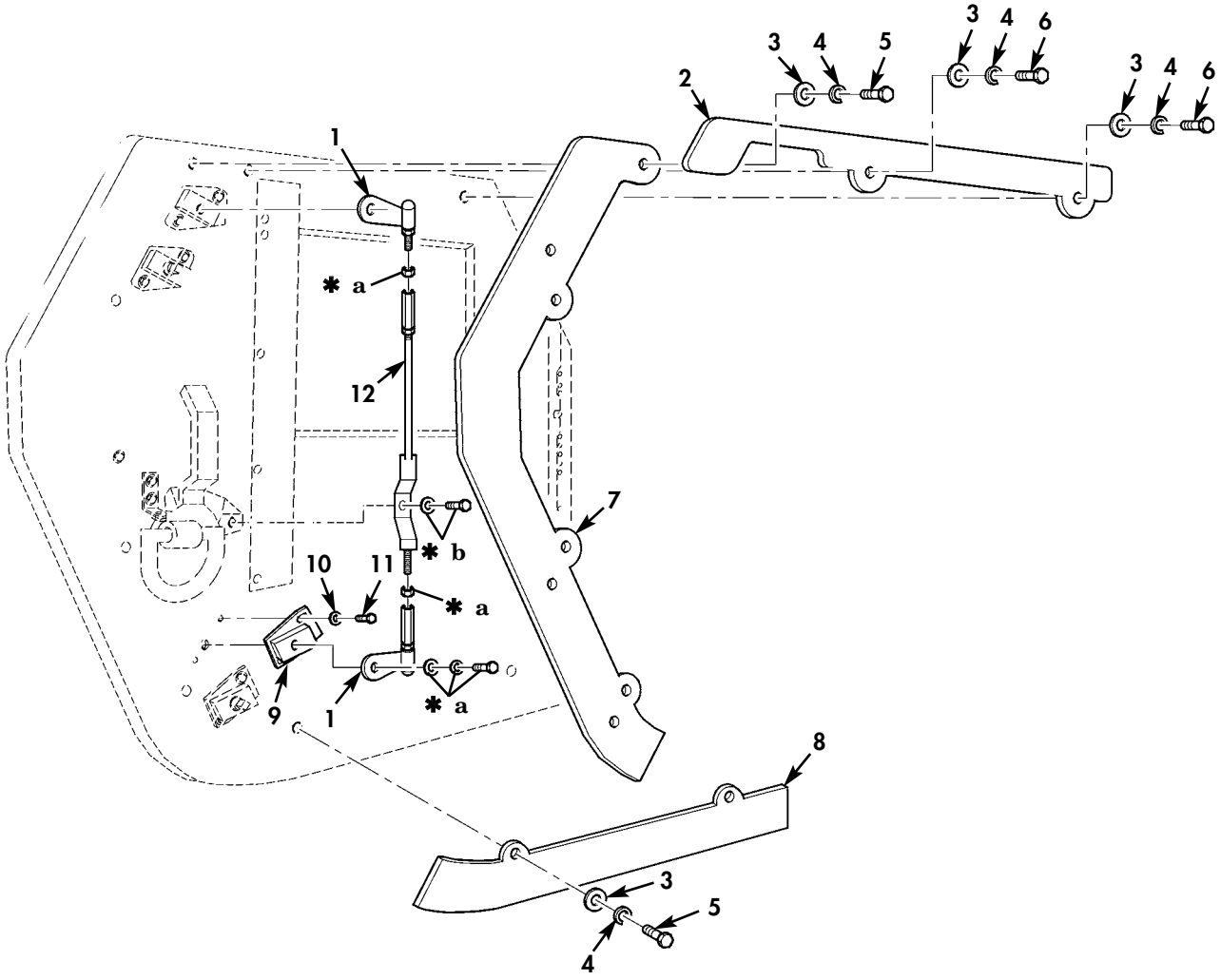

✱ QUANTITY SHOWN
REFLECTS ONE DOOR

✱ **a** PART OF ITEM 1

✱ **b** PART OF ITEM 12

Figure 169I. Frag 5 Kit, Rear Door Linkages, Armor Skirts, and Related Hardware (M1114).

(1) ITEM NO	(2) SMR CODE	(3) NSN	(4) CAGEC	(5) PART NUMBER	(6) DESCRIPTION AND USABLE ON CODES(UOC)	(7) QTY
					GROUP 1801 BODY,CAB,HOOD,AND HULL ASSEMBLY	
					FIG. 169I FRAG 5 KIT,REAR DOOR LINKAGES,ARMOR SKIRTS,AND RELATED HARDWARE (M1114)	
* 1	PAOZZ		19220	16874-63B-75	LEVER,ACTUATOR L.H.,TOP OR BOTTOM... UOC:XBB	2
* 1	PAOZZ		19220	16874-63A-75	LEVER,ACTUATOR R.H.,TOP OR BOTTOM... UOC:XBB	2
* 2	PAOZZ		6W728	6435258-200M1	ARMOR,SUPPLEMENTAL L.H. OR R.H.,TOP UOC:XBB	1
* 3	PAOZZ		6W728	4397005-017	WASHER,FLAT 7/16..... UOC:XBB	8
* 4	PAOZZ		6W728	4397004-009	WASHER,LOCK 7/16..... UOC:XBB	8
* 5	PAOZZ		6W728	4397001-390	SCREW,CAP,HEXAGON H 7/16-20 X 3.75.. UOC:XBB	6
* 6	PAOZZ		6W728	4397001-389	SCREW,CAP,HEXAGON H.7/16-20 X 3.50.. UOC:XBB	2
* 7	PAOZZ		6W728	6435101-200M1	ARMOR,SUPPLEMENTAL R.H..... UOC:XBB	1
* 7	PAOZZ		6W728	6435106-200M1	ARMOR,SUPPLEMENTAL L.H..... UOC:XBB	1
* 8	PAOZZ		6W728	6435240-200M1	ARMOR,SUPPLEMENTAL R.H..... UOC:XBB	1
* 8	PAOZZ		6W728	6435236-200M1	ARMOR,SUPPLEMENTAL L.H..... UOC:XBB	1
* 9	PAOZZ		6W728	6435643-200M1	BRACKET,VEHICULAR C L.H..... UOC:XBB	4
* 9	PAOZZ		6W728	6435644-200M1	BRACKET,VEHICULAR C R.H..... UOC:XBB	4
* 10	PAOZZ	5310014363741	6W728	4397005-013	WASHER,FLAT 5/16..... UOC:XBB	8
* 11	PAOZZ	5306014339183	6W728	4397000-036	BOLT,MACHINE 5/16-18 X 1.25..... UOC:XBB	8
* 12	PAOZZ		19220	16877-RT-75	PIN,STRAIGHT HEADLE OUTSIDE TOP..... UOC:XBB	1

END OF FIGURE

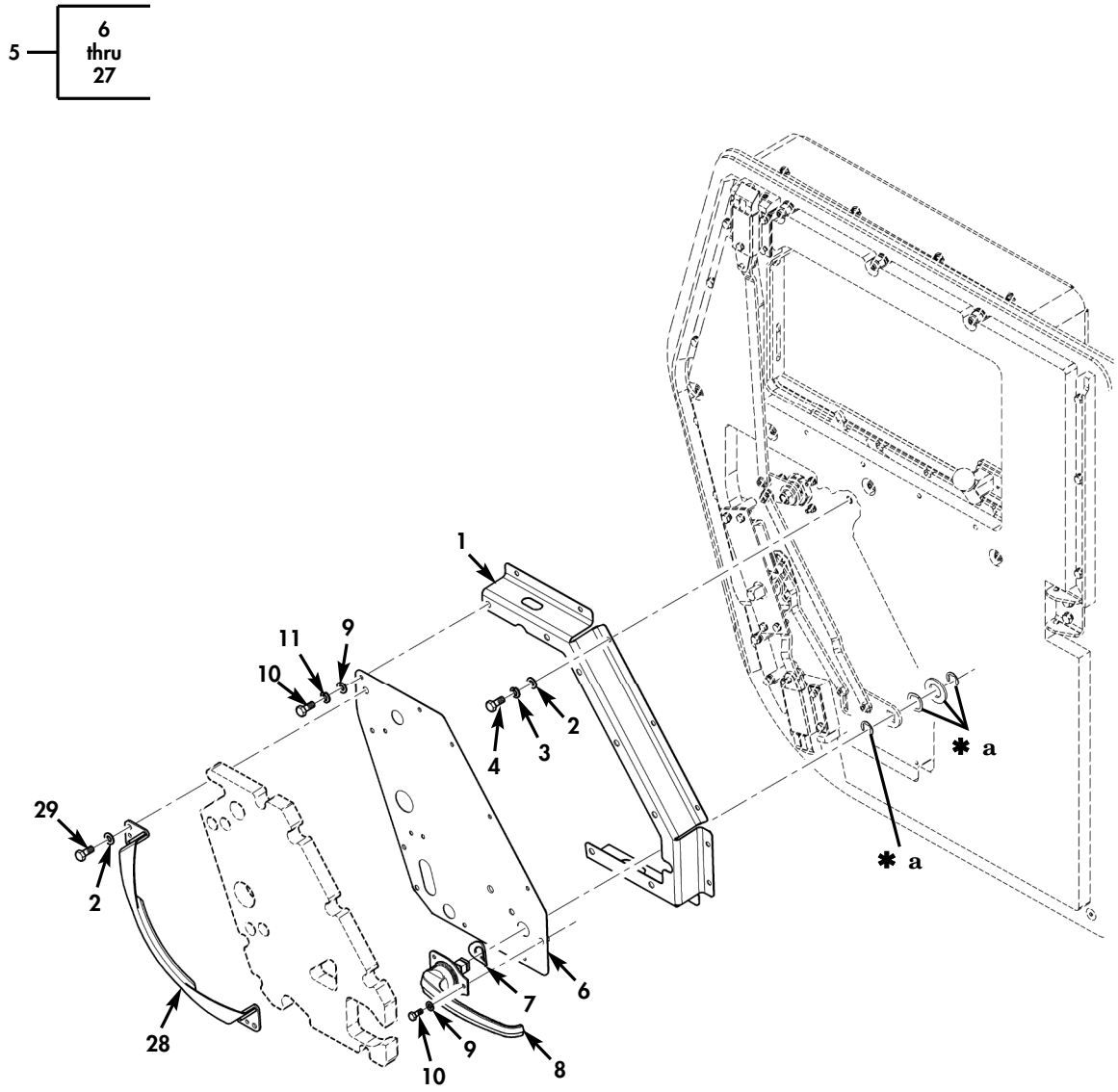

✱ QUANTITY SHOWN
REFLECTS ONE DOOR

✱ **a** PART OF ITEM 7

Figure 169J. Rear Standard Threat Door Linkages (Sheet 1 of 2).

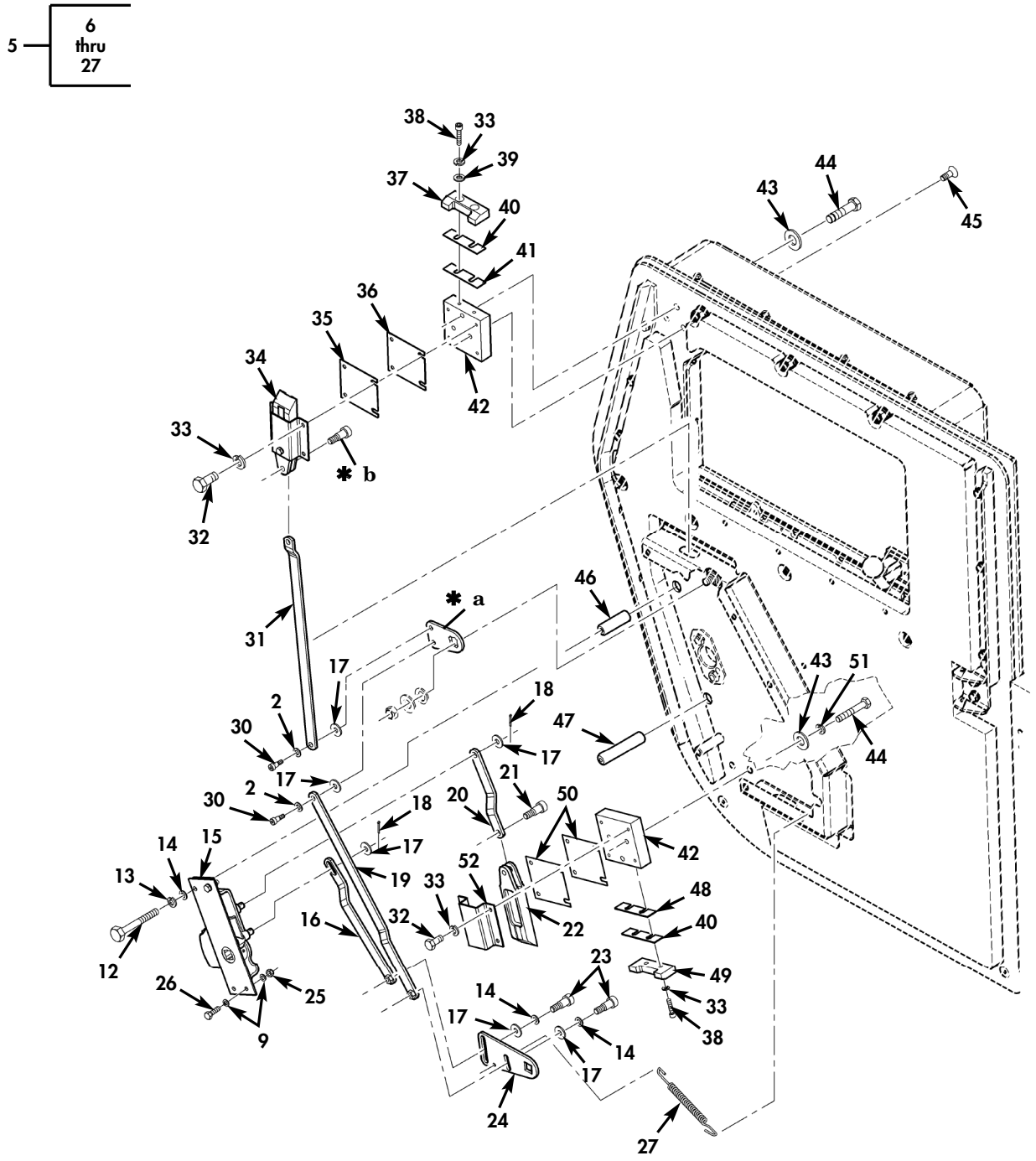

✱ QUANTITY SHOWN REFLECTS ONE DOOR

✱ **a** PART OF ITEM 8

✱ **b** PART OF ITEM 34

Figure 169J. Rear Standard Threat Door Linkages (Sheet 2 of 2).

(1) ITEM NO	(2) SMR CODE	(3) NSN	(4) CAGEC	(5) PART NUMBER	(6) DESCRIPTION AND USABLE ON CODES(UOC)	(7) QTY
					GROUP 1801 BODY,CAB,HOOD,AND HULL ASSEMBLY	
					FIG. 169J REAR STANDARD THREAT DOOR LINKAGES	
* 1	PFOZZ	2590015688343	34623	6039195	BRACKET,VEHICULAR C, L.H..... UOC:TTA,TT1,UU2	1
* 1	PFOZZ	2590015691518	34623	6039306	BRACKET,VEHICULAR C, R.H..... UOC:TTA,TT1,UU2	1
* 2	PAOZZ	5310011191024	24617	2436162	WASHER,FLAT..... UOC:TTA,TT1,UU2	11
* 3	PAOZZ	5310004079566	80205	MS35338-45	WASHER,LOCK 5/16..... UOC:TTA,TT1,UU2	7
* 4	PAOZZ	5306002264824	80204	B1821BH031C063N	BOLT,MACHINE 5/16-18 X 5/8..... UOC:TTA,TT1,UU2	9
* 5	PAOOO		34623	6035175	LOCK,HANDLE ASSEMBL L.H..... UOC:TTA,TT1,UU2	1
* 5	PAOOO		34623	6035176	LOCK,HANDLE ASSEMBL R.H..... UOC:TTA,TT1,UU2	1
* 6	PAOZZ	5340015691336	34623	6035376	.COVER,ACCESS L.H..... UOC:TTA,TT1,UU2	1
* 6	PAOZZ	5340015687857	34623	6035377	.COVER,ACCESS R.H..... UOC:TTA,TT1,UU2	1
* 7	PFOZZ	5310015688391	34623	6039739	.WASHER,SPRING TENS..... UOC:TTA,TT1,UU2	1
* 8	PAOZZ	2540015635843	19200	6-5624-52	.HANDLE,DOOR,VEHICUL L.H. OR R.H.,INNER..... UOC:TTA,TT1,UU2	1
* 9	PAOZZ	5310011023270	34623	2436161	.WASHER,FLAT 1/4..... UOC:TTA,TT1,UU2	16
* 10	PAOZZ	5305000687837	80204	B1821BH025C063N	.SCREW,CAP,HEXAGON H 1/4-20 X 5/8... UOC:TTA,TT1,UU2	10
* 11	PAOZZ	5310005825965	80205	MS35338-44	.WASHER,LOCK 1/4..... UOC:TTA,TT1,UU2	7
* 12	PAOZZ	5306002264836	80204	B1821BH031C275N	.BOLT,MACHINE 5/16-18 X 2.75..... UOC:TTA,TT1,UU2	3
* 13	PAOZZ	5310004079566	80205	MS35338-45	.WASHER,LOCK 5/16..... UOC:TTA,TT1,UU2	1
* 14	PAOZZ	5310011191024	24617	2436162	.WASHER,FLAT.5/16..... UOC:TTA,TT1,UU2	3
* 15	PAOZZ	2540015635043	34623	6035375	.LATCH,DOOR,VEHICULA..... UOC:TTA,TT1,UU2	1
* 16	PAOZZ	2540015635849	34623	6031751	.LATCH,DOOR,VEHICULA..... UOC:TTA,TT1,UU2	1
* 17	PAOZZ		39428	95630A480	.WASHER,FLAT PLASTIC..... UOC:TTA,TT1,UU2	6
* 18	PAOZZ	5315008395821	80205	MS24665-351	.PIN,COTTER..... UOC:TTA,TT1,UU2	2
* 19	PAOZZ	3040015633761	34623	6031744	.CONNECTING LINK,RIG..... UOC:TTA,TT1,UU2	1
* 20	PAOZZ	3040015633761	34623	6031732	.CONNECTING LINK,RIG..... UOC:TTA,TT1,UU2	1

(1) ITEM NO	(2) SMR CODE	(3) NSN	(4) CAGEC	(5) PART NUMBER	(6) DESCRIPTION AND USABLE ON CODES(UOC)	(7) QTY
* 21	PFOZZ	5305015684513	19200	1-2525-18NP	.SCREW,SHOULDER..... UOC:TTA,TT1,UU2	1
* 22	PAOZZ	5340015632356	19200	1-5631-13-71	.STRIKE,CATCH LOWER..... UOC:TTA,TT1,UU2	1
* 23	PAOZZ	5305015227214	96547	263005026TPH-1	.SCREW,SHOULDER..... UOC:TTA,TT1,UU2	2
* 24	PAOZZ	2590015634560	34623	6031734	.BRACKET,VEHICULAR C..... UOC:TTA,TT1,UU2	1
* 25	PAOZZ	5310000614650	81349	M45913/3-4CG8C	.NUT,SELF-LOCKING,HE 1/4-20..... UOC:TTA,TT1,UU2	3
* 26	PAOZZ	5305000712505	80204	B1821BH025C088N	.SCREW,CAP,HEXAGON H 1/4-20 X 7/8... UOC:TTA,TT1,UU2	3
* 27	PFOZZ	5360015634873	34623	6035273	.SPRING,HELICAL,EXTE..... UOC:TTA,TT1,UU2	1
* 28	PAOZZ	2540015457418	19207	12485221	LATCH,DOOR,VEHICULA..... UOC:TTA,TT1,UU2	1
* 29	PAOZZ	5306002264825	80204	B1821BH031C075N	BOLT,MACHINE 5/16-18 X 3/4..... UOC:TTA,TT1,UU2	4
* 30	PAOZZ	5305015227214	96547	263005026TPH-1	SCREW,SHOULDER..... UOC:TTA,TT1,UU2	2
* 31	PAOZZ	3040015635160	34623	6031769	CONNECTING LINK,RIG..... UOC:TTA,TT1,UU2	1
* 32	PAOZZ	5305000712505	80204	B1821BH025C088N	SCREW,CAP,HEXAGON H 1/4-20 X 7/8.... UOC:TTA,TT1,UU2	8
* 33	PAOZZ	5310005825965	80205	MS35338-44	WASHER,LOCK 1/4..... UOC:TTA,TT1,UU2	12
* 34	PAOZZ	2540015642896	19200	4A-M8639-52PK	LATCH,DOOR,VEHICULA UPPER..... UOC:TTA,TT1,UU2	1
* 35	PFOZZ	5365015546601	34623	6032258	SHIM .030 THICK..... UOC:TTA,TT1,UU2	V
* 36	PAOZZ	5365015548772	34623	6030754	SHIM .048..... UOC:TTA,TT1,UU2	V
* 37	PAOZZ	5340015633273	34623	6030905	PLATE,MOUNTING UPPER..... UOC:TTA,TT1,UU2	1
* 38	PFOZZ	5305014750553	6W728	4397015-093	SCREW,CAP,SOCKET HE 1/4-20 X 1.00... UOC:TTA,TT1,UU2	4
* 39	PAOZZ	5310011023270	34623	2436161	WASHER,FLAT 1/4..... UOC:TTA,TT1,UU2	2
* 40	PAOZZ	5365015548442	34623	6030910	SHIM..... UOC:TTA,TT1,UU2	V
* 41	PFOZZ	5365015550821	34623	6030909	SHIM..... UOC:TTA,TT1,UU2	V
* 42	PAOZZ	2590015691313	34623	6039250	BLOCK,MOUNTING,ACTI..... UOC:TTA,TT1,UU2	2
* 43	PAOZZ	5310014124013	24617	2436163	WASHER,FLAT 3/8..... UOC:TTA,TT1,UU2	4
* 44	PAOZZ	5305005432866	80204	B1821BH038C250N	SCREW,CAP,HEXAGON H 3/8-16 X 2.50... UOC:TTA,TT1,UU2	4
* 45	PAOZZ	5305000509215	80205	MS24667-52	SCREW, SOCKET, FLAT..... UOC:TTA,TT1,UU2	2
* 46	PFOZZ	5365015683403	34623	6039219-1.86	SPACER,SLEEVE..... UOC:TTA,TT1,UU2	1

(1) ITEM NO	(2) SMR CODE	(3) NSN	(4) CAGEC	(5) PART NUMBER	(6) DESCRIPTION AND USABLE ON CODES(UOC)	(7) QTY
* 47	PFOZZ	5365015684001	34623	6039219-2.14	SPACER,SLEEVE..... UOC:TTA,TT1,UU2	2
* 48	PAOZZ	5365015548295	34623	6030908	SHIM..... UOC:TTA,TT1,UU2	V
* 49	PAOZZ	5340015634646	34623	6034473	PLATE,MOUNTING LOWER..... UOC:TTA,TT1,UU2	1
* 50	PAOZZ	5365015546601	34623	6030753	SHIM..... UOC:TTA,TT1,UU2	V
* 51	PAOZZ	5310000045033	80205	MS35338-46	WASHER,LOCK 3/8..... UOC:TTA,TT1,UU2	3
* 52	PAOZZ	2590015633677	19200	5631-11-DG	BRACKET,VEHICULAR C..... UOC:TTA,TT1,UU2	1

END OF FIGURE

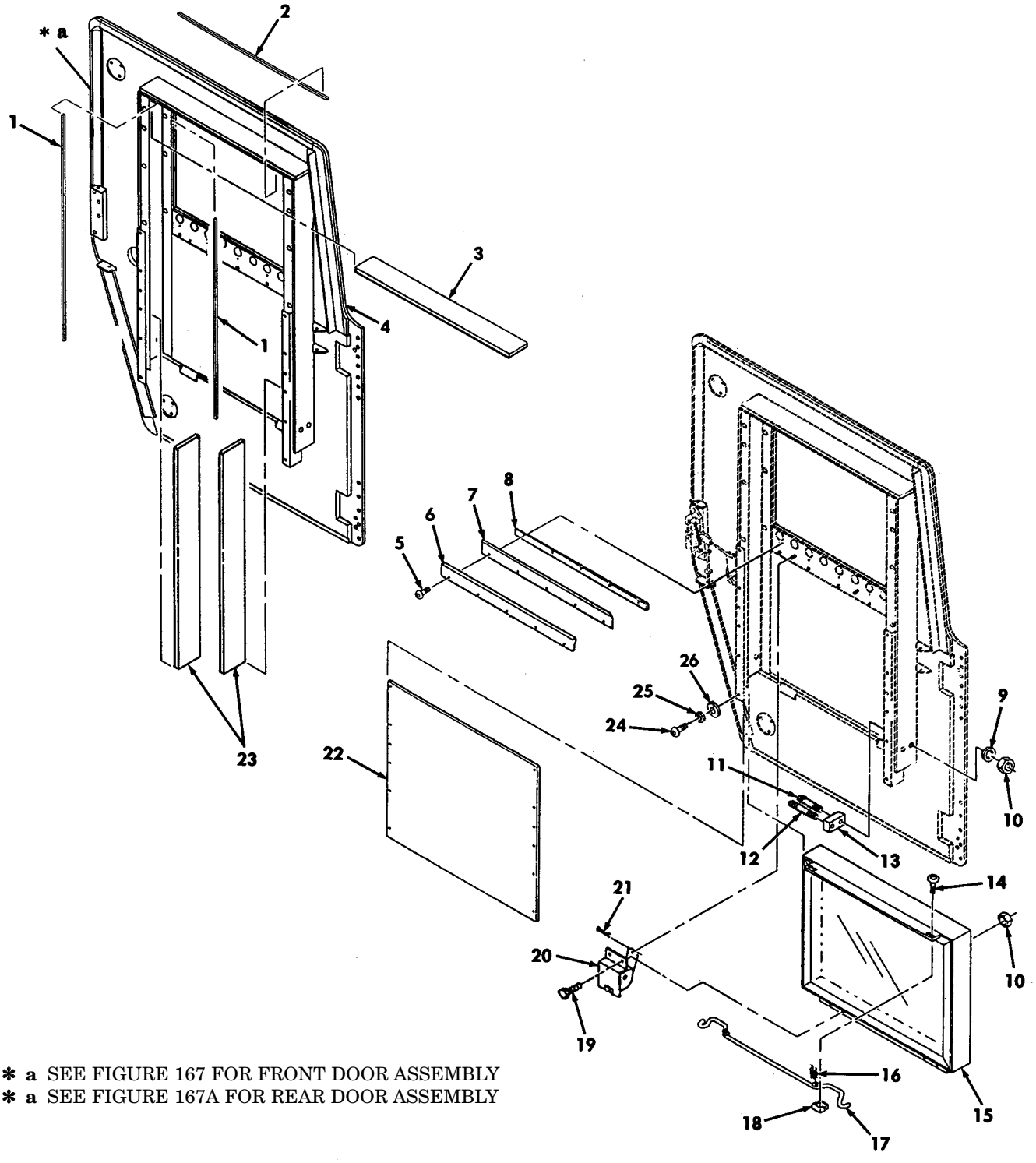

* a SEE FIGURE 167 FOR FRONT DOOR ASSEMBLY
* a SEE FIGURE 167A FOR REAR DOOR ASSEMBLY

Figure 170. Door Subassembly, Window, and Related Parts.

(1) ITEM NO	(2) SMR CODE	(3) NSN	(4) CAGEC	(5) PART NUMBER	(6) DESCRIPTION AND USABLE ON CODES(UOC)	(7) QTY
					GROUP 0801 BODY,CAB,HOOD,AND HULL ASSEMBLY	
					FIG. 170 DOOR SUBASSEMBLY,WINDOW, AND RELATED PARTS	
* 1	MOOZZ		6W728	4668948-24	SEAL,NONMETALLIC SP MAKE FROM SEAL P/N 4668948-000,24 INCHES LONG..... UOC:XBB	4
* 2	MOOZZ		6W728	4668948-016	SEAL,NONMETALLIC SP MAKE FROM SEAL P/N 4668948-000,16 INCHES LONG..... UOC:XBB	1
* 3	MOOZZ		6W728	1000214-018	SEAL,NONMETALLIC SP MAKE FROM SEAL P/N 1000214-001,18 INCHES LONG..... UOC:XBB	1
4	PBOZZ	2540014345149	6W728	4660861	ARMOR,SUPPLEMENTAL FRONT LEFT..... UOC:XBB	1
4	PBOZZ	2450014346620	6W728	4660862	ARMOR,SUPPLEMENTAL REAR LEFT..... UOC:XBB	1
4	PBOZZ	2540014345150	6W728	4660863	ARMOR,SUPPLEMENTAL FRONT RIGHT..... UOC:XBB	1
4	PBOZZ	2540014346619	6W728	4660864	ARMOR,SUPPLEMENTAL REAR RIGHT..... UOC:XBB	1
* 5	PAOZZ	5305014339259	6W728	4397008-052	SCREW,MACHINE #8-32 X 3/8..... UOC:XBB	5
* 6	PAOZZ	5365014179849	6W728	4668515	SPACER,PLATE..... UOC:XBB	1
* 7	PAOZZ	5640014753698	6W728	4660814	SEAL,PLAIN BOTTOM WONDOW..... UOC:XBB	V
* 8	PAOZZ	2540014179981	6W728	4668625	BAR,WINDOW WIPER..... UOC:XBB	1
* 9	PAOZZ	5310014357784	6W728	4397005-010	WASHER,FLAT 9/32..... UOC:XBB	4
* 10	PAOZZ	5310014398173	6W728	4397064-001	NUT,SELF-LOCKING 1/4-20..... UOC:XBB	8
* 11	PAOZZ	5305014347258	6W728	4397015-030	SCREW,CAP,HEXAGON HE 1/4-20 X 3/4.. UOC:XBB	2
* 12	PAOZZ	5305014750553	6W728	4397015-093	SCREW,CAP,SOCKET HE 1/4-20 X 1.00.. UOC:XBB	1
* 13	PAOZZ	5340014195188	39428	9306K14	BUMPER,NONMETALLIC..... UOC:XBB	2
* 14	PAOZZ	5305014339258	6W728	4397008-072	SCREW,MACHINE #10-24 X 1/2..... UOC:XBB	4
* 15	PAOZZ	25100145359692	6W728	4660202	WINDOW,VEHICULAR..... UOC:XBB	1
* 16	PAOZZ	5360014749653	56988	S731	SPRING,HELICAL COMP..... UOC:XBB	2
* 17	PAOZZ	3040014189500	6W728	4668655	CONNECTING LINK,RIG..... UOC:XBB	1
* 18	PFOZZ	5340014178996	6W728	4668633	PLATE,MOUNTING..... UOC:XBB	2
* 19	PAOZZ	5306000680514	80204	B1821BH025C088N	BOLT,MACHINE 1/4-20 X 7/8..... UOC:XBB	4

(1) ITEM NO	(2) SMR CODE	(3) NSN	(4) CAGEC	(5) PART NUMBER	(6) DESCRIPTION AND USABLE ON CODES(UOC)	(7) QTY
* 20	PFOZZ	2540014186825	6W728	4668639	SPRING ASSEMLBY, WIN..... UOC:XBB	2
* 21	PAOZZ	5315014338419	6W728	4397007-008	PIN,COTTER..... UOC:XBB	2
* 22	PFOZZ	2540014197051	6W728	4668619	ARMOR,SUPPLEMENTAL..... UOC:XBB	1
* 23	MOOZZ		6W728	1000214-024	SEAL,NONMETALLIC SP MAKE FROM SEAL P/N 1000214-001,24 INCHES LONG..... UOC:XBB	1
* 24	PAOZZ	5305014464660	6W728	4397018-072	SCREW,CAP,HEXAGON H #10-24 X 1/2... UOC:XBB	5
* 25	PAOZZ	5310014341385	6W728	4397004-005	WASHER,LOCK #10..... UOC:XBB	5
* 26	PAOZZ	5310014177333	6W728	4397005-008	WASHER,FLAT 7/32..... UOC:XBB	5

END OF FIGURE

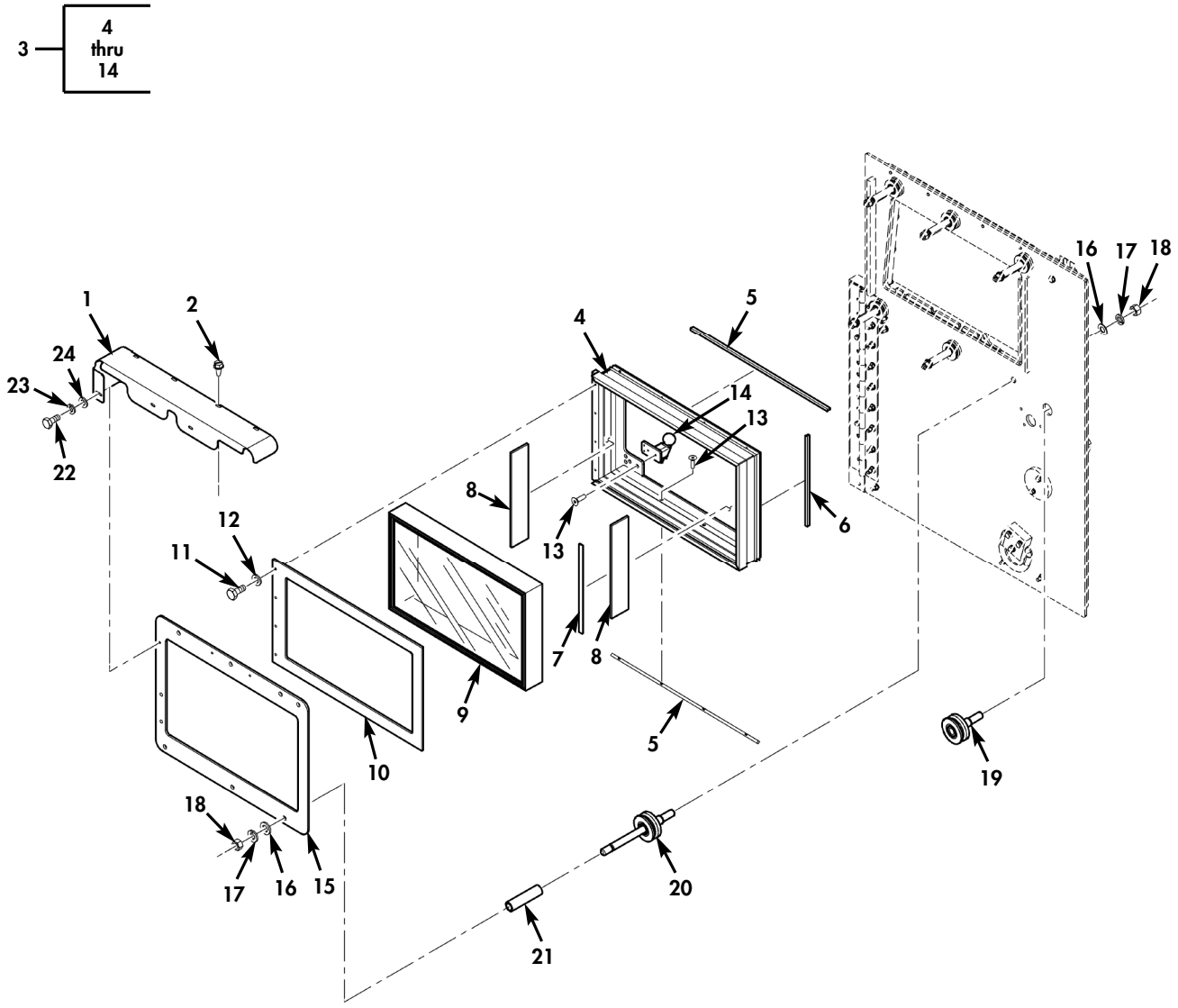

✱ QUANTITY SHOWN
REFLECTS ONE DOOR

Figure 170A. Front and Rear Standard Threat Door Window Assembly (Sheet 1 of 2).

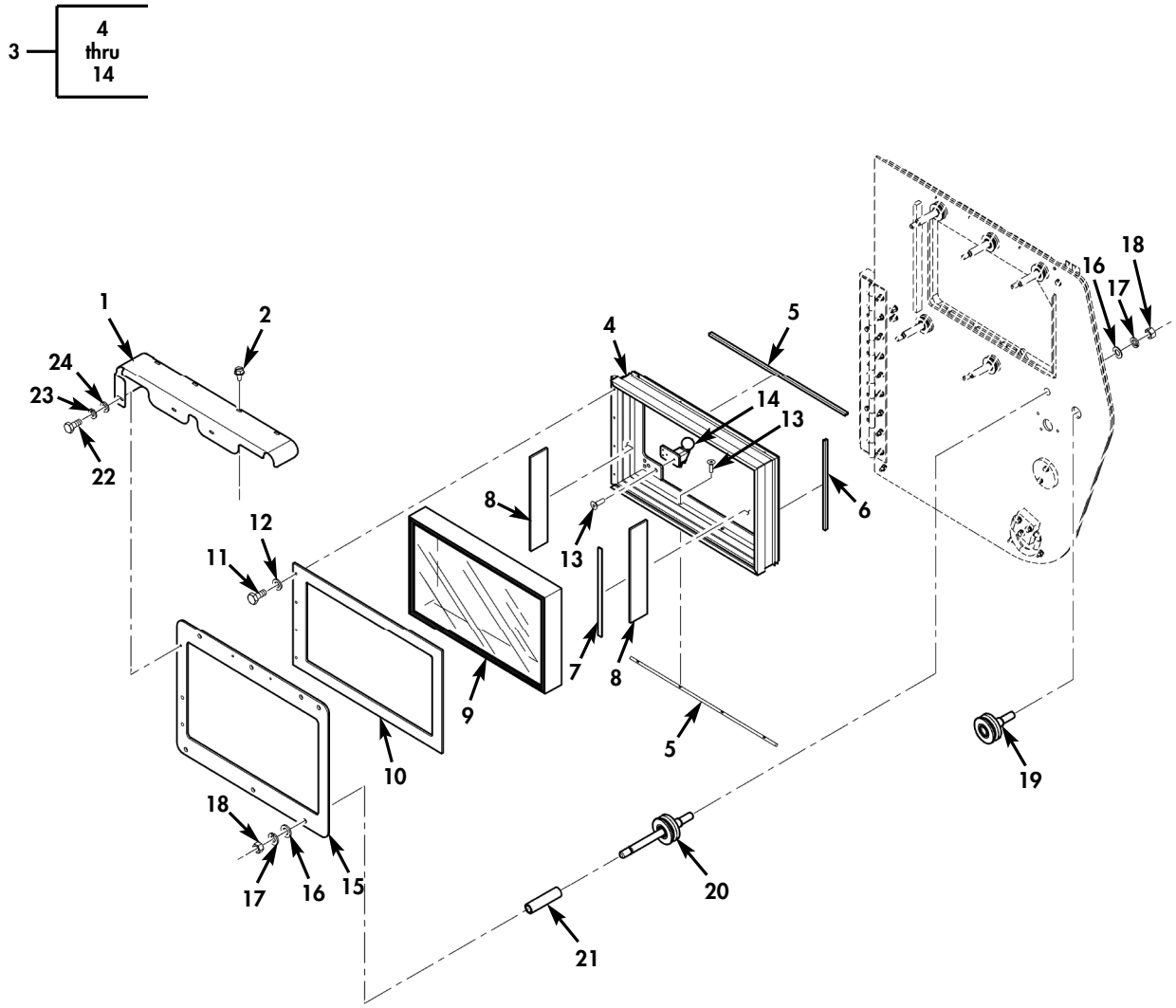

REAR

✱ QUANTITY SHOWN
REFLECTS ONE DOOR

Figure 170A. Front and Rear Standard Threat Door Window Assembly (Sheet 2 of 2).

(1) ITEM NO	(2) SMR CODE	(3) NSN	(4) CAGEC	(5) PART NUMBER	(6) DESCRIPTION AND USABLE ON CODES(UOC)	(7) QTY
					GROUP 1801 BODY,CAB,HOOD,AND HULL ASSEMBLY	
					FIG. 170A FRONT AND REAR STANDARD THREAT DOOR WINDOW ASSEMBLY	
* 1	PAOZZ	2540015690259	34623	6038444	COVER,WINDOW L.H.,FRONT OR REAR..... UOC:TTA,TT1,UUA,UU2	1
* 1	PAOZZ	2540015690402	34623	6038445	COVER,WINDOW R.H.,FRONT OR REAR..... UOC:TTA,TT1,UUA,UU2	1
* 2	PAOZZ	5305012067219	24617	9426241	SCREW,TAPPING 1/4-14 X 1/2..... UOC:TTA,TT1,UUA,UU2	4
* 3	PAOOO		34623	6034687	WINDOW,VEHICULAR L.H.,FRONT OR REAR. UOC:TTA,TT1,UUA,UU2	1
* 3	PAOOO		34623	6034688	WINDOW,VEHICULAR R.H.,FRONT OR REAR. UOC:TTA,TT1,UUA,UU2	1
* 4	PAOZZ	2510015691386	34623	6034720	.FRAME,WINDOW,VEHICU L.H..... UOC:TTA,TT1,UUA,UU2	1
* 4	PAOZZ	2510015687896	34623	6034722	.FRAME,WINDOW,VEHICU R.H..... UOC:TTA,TT1,UUA,UU2	1
* 5	PAOZZ	2510015634407	34623	6030593	.FRAME,SECTION,WINDO TRACK..... UOC:TTA,TT1,UUA,UU2	2
* 6	PAOZZ	5330015633477	34623	6030760	.SEAL,NONMETALLIC..... UOC:TTA,TT1,UUA,UU2	2
* 7	MOOZZ		34623	6039518-12	.SEAL,NONMETALLIC MAKE FROM TAPE P/N 6006217,12 INCHES LONG..... UOC:TTA,TT1,UUA,UU2	1
* 8	PAOZZ	2540015743593	34623	6035056	.ARMOR,SUPPLEMENTAL..... UOC:TTA,TT1,UUA,UU2	2
* 9	PAOZZ		34623	6034686	.WINDOW,VEHICULAR L.H. OR R.H..... UOC:TTA,TT1,UUA,UU2	1
* 10	PAOZZ	2510015687882	34623	6041100	.FRAME,WINDOW,VEHICU..... UOC:TTA,TT1,UUA,UU2	1
* 11	PAOZZ	5305002253843	80204	B1821BH025C100N	.SCREW,CAP,HEXAGON H 1/4-20 X 1.00.. UOC:TTA,TT1,UUA,UU2	4
* 12	PAOZZ	5310011023270	34623	2436161	.WASHER,FLAT 1/4..... UOC:TTA,TT1,UUA,UU2	4
* 13	PAOZZ	5305007642970	80205	MS24667-21	.SCREW,CAP,SOCKET HE..... UOC:TTA,TT1,UUA,UU2	6
* 14	PAOZZ	5305015542331	34623	6030597	.KNOB L.H..... UOC:TTA,TT1,UUA,UU2	1
* 14	PAOZZ	5355015542334	34623	6030759	.KNOB R.H..... UOC:TTA,TT1,UUA,UU2	1
* 15	PAOZZ	2510015687752	34623	6041804	FRAME,WINDOW,VEHICU..... UOC:TTA,TT1,UUA,UU2	1
* 16	PAOZZ	5310011211703	24617	2436165	WASHER,FLAT 1/2..... UOC:TTA,TT1,UUA,UU2	12
* 17	PAOZZ	5310005845272	80205	MS35338-48	WASHER,LOCK 1/2..... UOC:TTA,TT1,UUA,UU2	12
* 18	PAOZZ	5310014654525	24617	9418753	NUT,PLAIN,HEXAGON 1/2-13..... UOC:TTA,TT1,UUA,UU2	12
* 19	PAOZZ	3110015688305	50372	X-140-A	BEARING,ROLLER,TRAC..... UOC:TTA,TT1,UUA,UU2	1

(1) ITEM NO	(2) SMR CODE	(3) NSN	(4) CAGEC	(5) PART NUMBER	(6) DESCRIPTION AND USABLE ON CODES(UOC)	(7) QTY
* 20	PAOZZ	3110015689378	34623	X-139-A	BEARING,ROLLER,TRAC..... UOC:TTA,TT1,UUA,UU2	6
* 21	PFOZZ	5365015687444	34623	6034739	SPACER,SLEEVE..... UOC:TTA,TT1,UUA,UU2	6
* 22	PAOZZ	5305000687837	80204	B1821BH025C063N	SCREW,CAP,HEXAGON H 1/4-20 X 5/8.... UOC:TTA,TT1,UUA,UU2	3
* 23	PAOZZ	5310005825965	80205	MS35338-44	WASHER,LOCK 1/4..... UOC:TTA,TT1,UUA,UU2	3
* 24	PAOZZ	5310011023270	34623	2436161	WASHER,FLAT 1/4..... UOC:TTA,TT1,UUA,UU2	3

END OF FIGURE

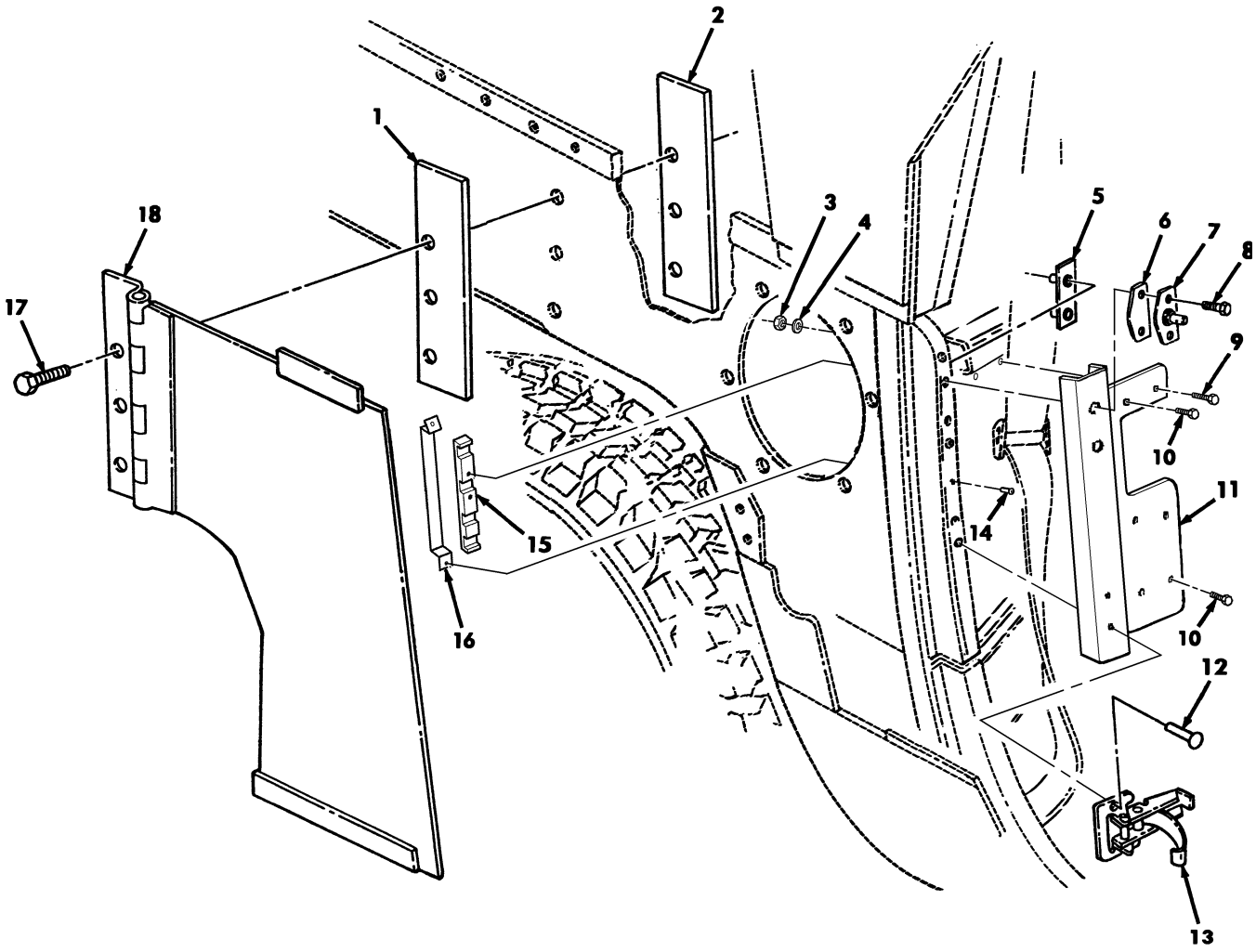

Figure 171. Fuel Door, Fuel Armor Latch, Door Latch, and Mounting Hardware.

(1) ITEM NO	(2) SMR CODE	(3) NSN	(4) CAGEC	(5) PART NUMBER	(6) DESCRIPTION AND USABLE ON CODES(UOC)	(7) QTY
					GROUP 1801 BODY,CAB,HOOD,AND HULL ASSEMBLY	
					FIG. 171 FUEL DOOR,FUEL ARMOR LATCH, DOOR LATCH,AND MOUNTING HARDWARE	
1	PAOZZ	5365014382406	6W728	4660417	SHIM,FUEL DOOR ASSMELBY..... UOC:XBB	1
2	PFOZZ	5340014342841	6W728	4660416	PLATE,MOUNTING..... UOC:XBB	1
* 3	PAOZZ	5310014398172	6W728	4397064-003	NUT,SELF-LOCKING HE 5/16-18..... UOC:XBB	12
* 4	PAOZZ	5340014178995	6W728	4397005-011	WASHER,FLAT .312 X .734..... UOC:XBB	12
* 5	PAOZZ	5310014365685	6W728	4668273	NUT,PLAIN PLATE REAR DOOR..... UOC:XBB	2
* 6	PAOZZ	5365014333995	6W728	4668622	SPACER,PLATE LATCH,REAR..... UOC:XBB	2
* 7	PAOZZ	5340014211782	19207	12339386	STRIKE,CATCH..... UOC:XBB	2
* 8	PAOZZ	5305002253843	80204	B1821BH025C100N	SCREW,CAP,HEXAGON H 1/4-20 X 1.00.. UOC:XBB	4
* 9	PAOZZ	5306014339183	6W728	4397000-036	BOLT,MACHINE PART OF KIT P/N 1000407..... UOC:XBB	6
* 10	PAOZZ	5305014206637	6W728	4397000-034	SCREW,CAP,HEXAGON H 5/16-18 X 1.25. PART OF KIT P/N 1000407..... UOC:XBB	10
* 11	PAOZZ	5340015300943	6W728	1000319-002	PLATE,MOUNTING L.H. PART OF KIT P/N 1000407..... UOC:XBB	1
* 11	PAOZZ	5340015193845	6W728	1000320-002	PLATE,MOUNTING R.H. PART OF KIT P/N 1000407..... UOC:XBB	1
* 12	PAOZZ	5320015299455	6W728	4397081-009	RIVET,BLIND PART OF KIT P/N 1000407. UOC:XBB	4
* 13	PAOZZ	5340014088508	71286	20L56-1-1AB	CATCH,CLAMPING..... UOC:XBB	1
* 14	PAOZZ	5320014732768	6W728	4397044-021	RIVET,BLIND .188 X .188 -.250..... UOC:XBB	2
* 15	PAOZZ	2510015203995	6W728	1000321-002	SCUFF PLATE,DOOR..... UOC:XBB	2
* 16	PAOZZ	5340015214569	6W728	1000322-002	STRAP,RETAINING..... UOC:XBB	2
* 17	PAOZZ	5306014343282	6W728	4397011-059	BOLT,MACHINE 3/8-24 X 7/8..... UOC:XBB	3
* 18	PAOZZ	2540014351058	6W728	4660412	ARMOR,SUPPLEMENTAL..... UOC:XBB	1

END OF FIGURE

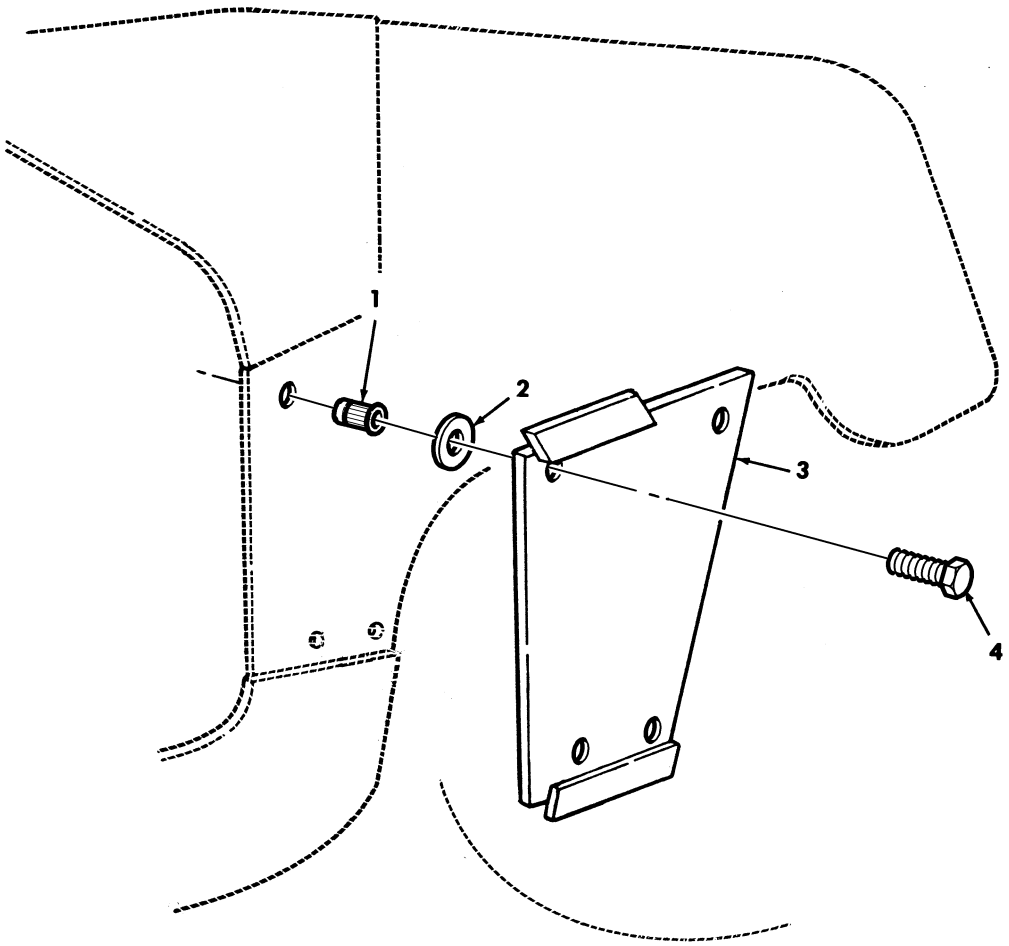

Figure 172. C-Pillar Lower Armor and Mounting Hardware.

(1) ITEM NO	(2) SMR CODE	(3) NSN	(4) CAGEC	(5) PART NUMBER	(6) DESCRIPTION AND USABLE ON CODES(UOC)	(7) QTY
					GROUP 1801 BODY,CAB,HOOD,AND HULL ASSEMBLY	
					FIG. 172 C-PILLAR LOWER ARMOR AND MOUNTING HARDWARE	
1	PAOZZ	5325013942414	78276	ALS7-420-165	INSERT,SCREW THREAD .250-20..... UOC:XBB	4
2	PAOZZ	5310014398181	6W728	4397083-001	WASHER,FLAT .387..... UOC:XBB	3
3	PFOZZ	2540014351054	6W728	4660408	ARMOR,SUPPLEMENTAL "C" PILLAR,LOWER UOC:XBB	1
4	PAOZZ	5306014376309	6W728	4397010-006	BOLT,MACHINE..... UOC:XBB	4

END OF FIGURE

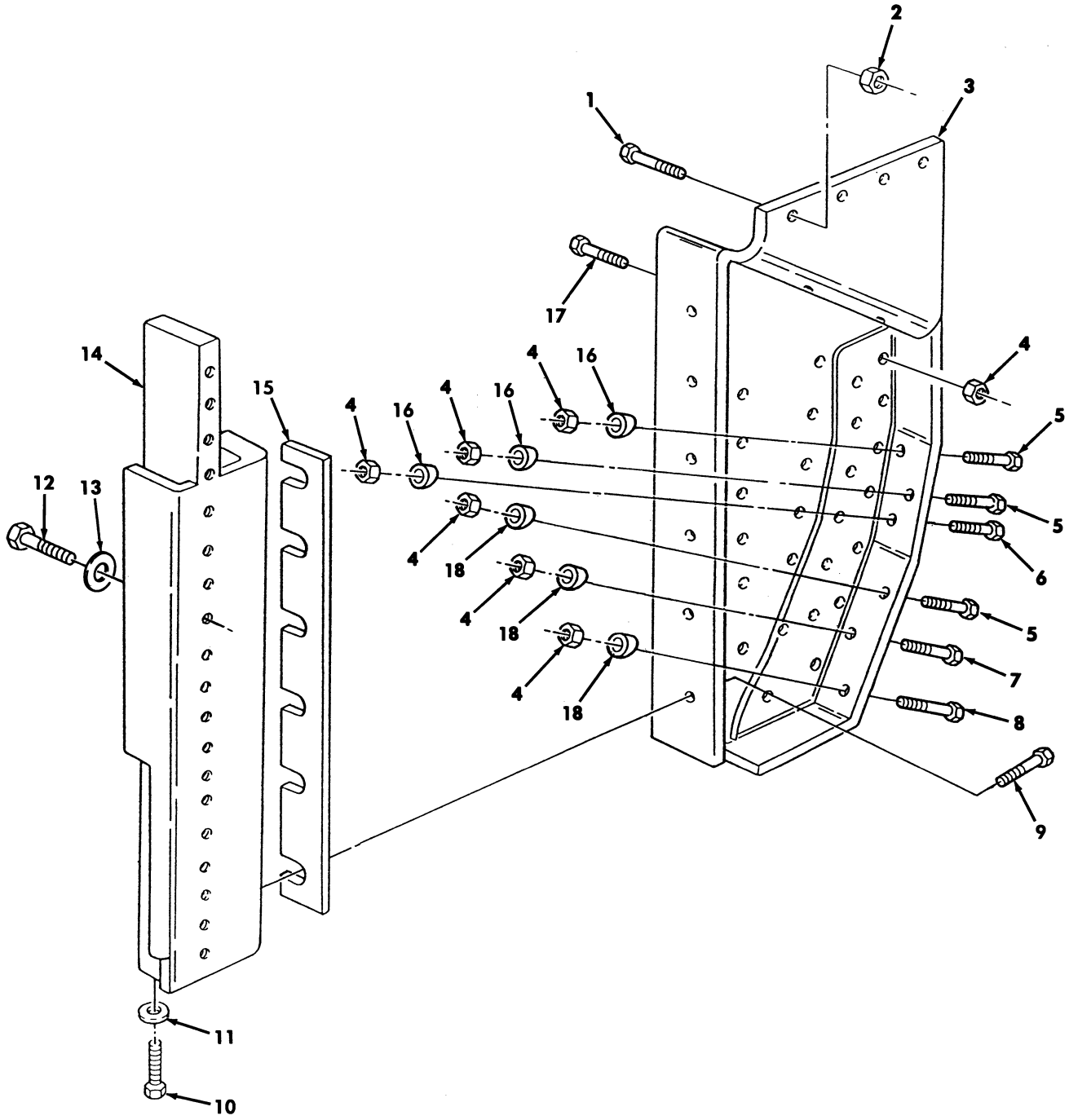

Figure 173. Driver Side Footwell Armor and Related Parts.

(1) ITEM NO	(2) SMR CODE	(3) NSN	(4) CAGEC	(5) PART NUMBER	(6) DESCRIPTION AND USABLE ON CODES(UOC)	(7) QTY
					GROUP 1801 BODY,CAB,HOOD,AND HULL ASSEMBLY	
					FIG. 173 DRIVER SIDE FOOTWELL ARMOR AND RELATED PARTS	
1	PAOZZ	5305014371324	6W728	4397008-093	SCREW,MACHINE .250-20 X 1.00..... UOC:XBB	4
2	PAOZZ	5310014398173	6W728	4397064-001	NUT,SELF-LOCKING,HE .250-20..... UOC:XBB	4
3	PAOZZ	2510014754743	6W728	4660451-002	LINER,KICK PANEL OUTER LEFT..... UOC:XBB	1
* 4	PAOZZ	5310014398177	6W728	4397064-005	NUT,SELF-LOCKING,HE .375-16..... UOC:XBB	6
* 5	PAOZZ	5305008080864	80204	B1821BH038C325N	SCREW,CAP HEXAGON H .375-16 X 3.25. UOC:XBB	3
* 6	PAOZZ	5305008465703	80204	B1821BH038C300N	SCREW,CAP HEXAGON H .375-16 X 3.00. UOC:XBB	1
* 7	PAOZZ	5305009908632	80204	B1821BH038C375N	SCREW,CAP HEXAGON H .375-16 X 3.75. UOC:XBB	1
* 8	PAOZZ	5305007813929	80204	B1821BH038C425N	SCREW,CAP HEXAGON H .375-16 X 4.25. UOC:XBB	1
* 9	PAOZZ	5305000680511	80204	B1821BH038C125N	SCREW,CAP HEXAGON H .375-16 X 1.25. UOC:XBB	6
* 10	PAOZZ	5305005434372	80204	B1821BH038C075N	SCREW,CAP HEXAGON H .375-16 X .750. UOC:XBB	2
* 11	PAOZZ	5310014192413	6W728	4397005-014	WASHER,FLAT .406..... UOC:XBB	2
* 12	PAOZZ	5305007813927	80204	B1821BH038C350N	SCREW,CAP HEXAGON H .375-16 X 3.50. UOC:XBB	16
* 13	PAOZZ	5310014363742	6W728	4397005-015	WASHER,FLAT .438..... UOC:XBB	16
* 14	XDOZZ		6W728	4660457	REINFORCEMENT LEFT..... UOC:XBB	1
* 15	PAOZZ		6W728	4660463	SPACER,COWL..... UOC:XBB	1
* 16	PAOZZ	5365014361230	6W728	4660869	SPACER,RING KICK PANEL WEDGE,SMALL. UOC:XBB	3
* 17	PAOZZ	5305007252317	80204	B1821BH038C150N	SCREW,CAP HEXAGON H 1/4-20 X 1.50.. UOC:XBB	15
* 18	PAOZZ	5365014361234	6W728	4660868	SPACER,RING KICK PANEL WEDGE,LARGE. UOC:XBB	3

END OF FIGURE

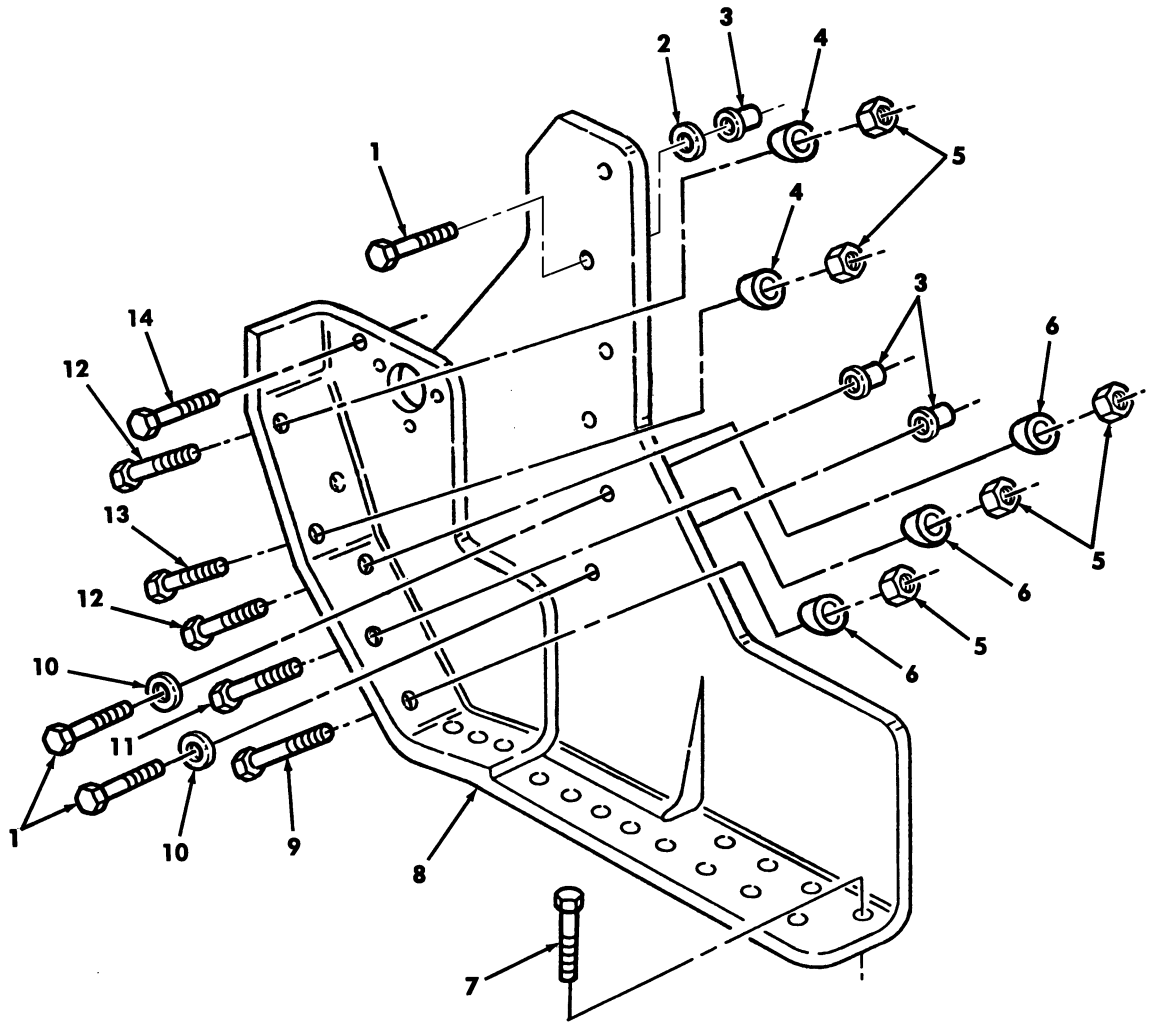

Figure 174. Driver Side Inner Armor and Mounting Hardware.

(1) ITEM NO	(2) SMR CODE	(3) NSN	(4) CAGEC	(5) PART NUMBER	(6) DESCRIPTION AND USABLE ON CODES(UOC)	(7) QTY
					GROUP 1801 BODY,CAB,HOOD,AND HULL ASSEMBLY	
					FIG. 174 DRIVER SIDE INNER ARMOR AND MOUNTING HARDWARE	
* 1	PAOZZ	5305000680511	80204	B1821BH038C125N	BOLT,MACHINE .375-16 X 1.25..... UOC:XBB	6
* 2	PAOZZ	5310014398181	6W728	4397083-001	WASHER,FLAT..... UOC:XBB	1
* 3	PAOZZ	5325014595008	78276	ALS4-616-312	INSERT,SCREW THREAD .375-16..... UOC:XBB	6
* 4	PAOZZ	5365014361230	6W728	4660869	SPACER,RING KICK PANEL WEDGE,SMALL. UOC:XBB	3
* 5	PAOZZ	5310014398177	6W728	4397064-005	NUT,SELF-LOCKING,HE .375-16..... UOC:XBB	10
* 6	PAOZZ	5365014361234	6W728	4660868	SPACER,RING KICK PANEL WEDGE,LARGE. UOC:XBB	3
* 7	PAOZZ	5305007252317	80204	B1821BH038C150N	SCREW,CAP HEXAGON H .375-16 X 1.50. UOC:XBB	15
* 8	PAOZZ	2510014754735	6W728	4660453-002	LINER,KICK PANEL INNER LEFT..... UOC:XBB	1
* 9	PAOZZ	5305007813929	80204	B1821BH038C425N	SCREW,CAP HEXAGON H .375-16 X 4.25. UOC:XBB	1
* 10	PAOZZ	5310014357791	6W728	4397005-075	WASHER,FLAT .406..... UOC:XBB	2
* 11	PAOZZ	5305009908632	80204	B1821BH038C375N	SCREW,CAP HEXAGON H .375-16 X 3.75. UOC:XBB	1
* 12	PAOZZ	5305008080864	80204	B1821BH038C325N	SCREW,CAP HEXAGON H .375-16 X 3.25. UOC:XBB	3
* 13	PAOZZ	5305008465703	80204	B1821BH038C300N	BOLT,MACHINE .375-16 X 3.00..... UOC:XBB	1
* 14	PAOZZ	5306014206635	6W728	4397000-012	BOLT,MACHINE 1/4-20 X 1.50..... UOC:XBB	4

END OF FIGURE

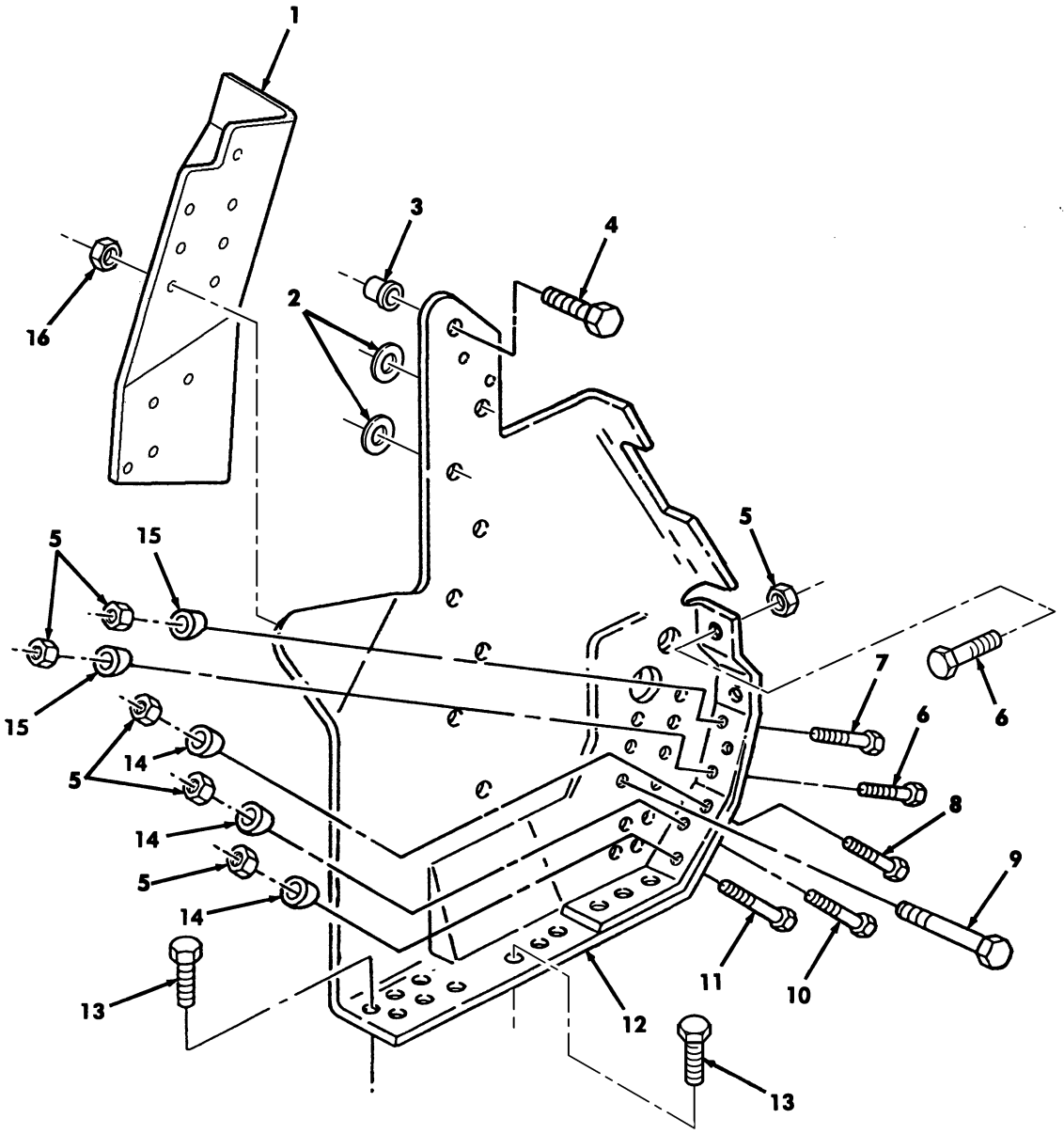

Figure 175. Passenger Side Inner Kick Panel and Mounting Hardware.

(1) ITEM NO	(2) SMR CODE	(3) NSN	(4) CAGEC	(5) PART NUMBER	(6) DESCRIPTION AND USABLE ON CODES(UOC)	(7) QTY
					GROUP 1801 BODY,CAB,HOOD,AND HULL ASSEMBLY	
					FIG. 175 PASSANGER SIDE INNER KICK PANEL AND MOUNTING HARDWARE	
* 1	PAOZZ	2540014436459	6W728	4660464	ARMOR,SUPPELMENTAL INNER-OUTER RIGHT COWL..... UOC:XBB	1
* 2	PAOZZ	5310014398181	6W728	4397083-001	WASHER,FLAT..... UOC:XBB	2
* 3	PAOZZ		6W728	4397050-052	NUT,UPSET LONG 3/8-16..... UOC:XBB	8
* 4	PAOZZ	5305000680511	80204	B1821BH038C125N	SCREW,CAP HEXAGON H .375-16 1.25... UOC:XBB	14
5	PAOZZ	5310014398177	6W728	4397064-005	NUT,SELF-LOCKING,HE .375-16..... UOC:XBB	18
* 6	PA0ZZ	5305000845703	80204	B1821BH038C300N	SCREW,CAP HEXAGON H .375-16 X 3.00. UOC:XBB	2
* 7	PAOZZ	5305014750404	6W728	4397000-072	SCREW,CAP HEXAGON H .375-16 X 3.50. UOC:XBB	1
* 8	PAOZZ	5305008080864	80204	B1821BH038C325N	SCREW,CAP HEXAGON H .376-16 X 3.525 UOC:XBB	2
* 9	PAOZZ	5306014485073	6W728	4397000-066	SCREW,CAP HEXAGON H .375-16 X 2.00. UOC:XBB	11
* 10	PAOZZ	5305009908632	80204	B1821BH038C375N	SCREW,CAP HEXAGON H .375-16 X 3.75. UOC:XBB	1
* 11	PAOZZ	5305008576886	80204	B1821BH038C450N	SCREW,CAP HEXAGON H .375-16 X 4.50. UOC:XBB	1
* 12	XAFZZ		6W728	4660452	LINER,KICK PANEL INNER RIGHT..... UOC:XBB	1
* 13	PAOZZ	5305007252317	80204	B1821BH038C150N	SCREW,CAP HEXAGON H .375-16 X 1.50. UOC:XBB	6
* 14	PAOZZ	5365014361234	6W728	4660868	SPACER,RING KICK PANEL WEDGE LARGE UOC:XBB	3
* 15	PAOZZ	5365014361230	6W728	4660869	SPACER,RING KICK PANEL WEDGE,SMALL. UOC:XBB	3
* 16	PAOZZ	5325014595008	78276	ALS7-616-312	NUT,SELF-LOCKING,UP .375-16..... UOC:XBB	20

END OF FIGURE

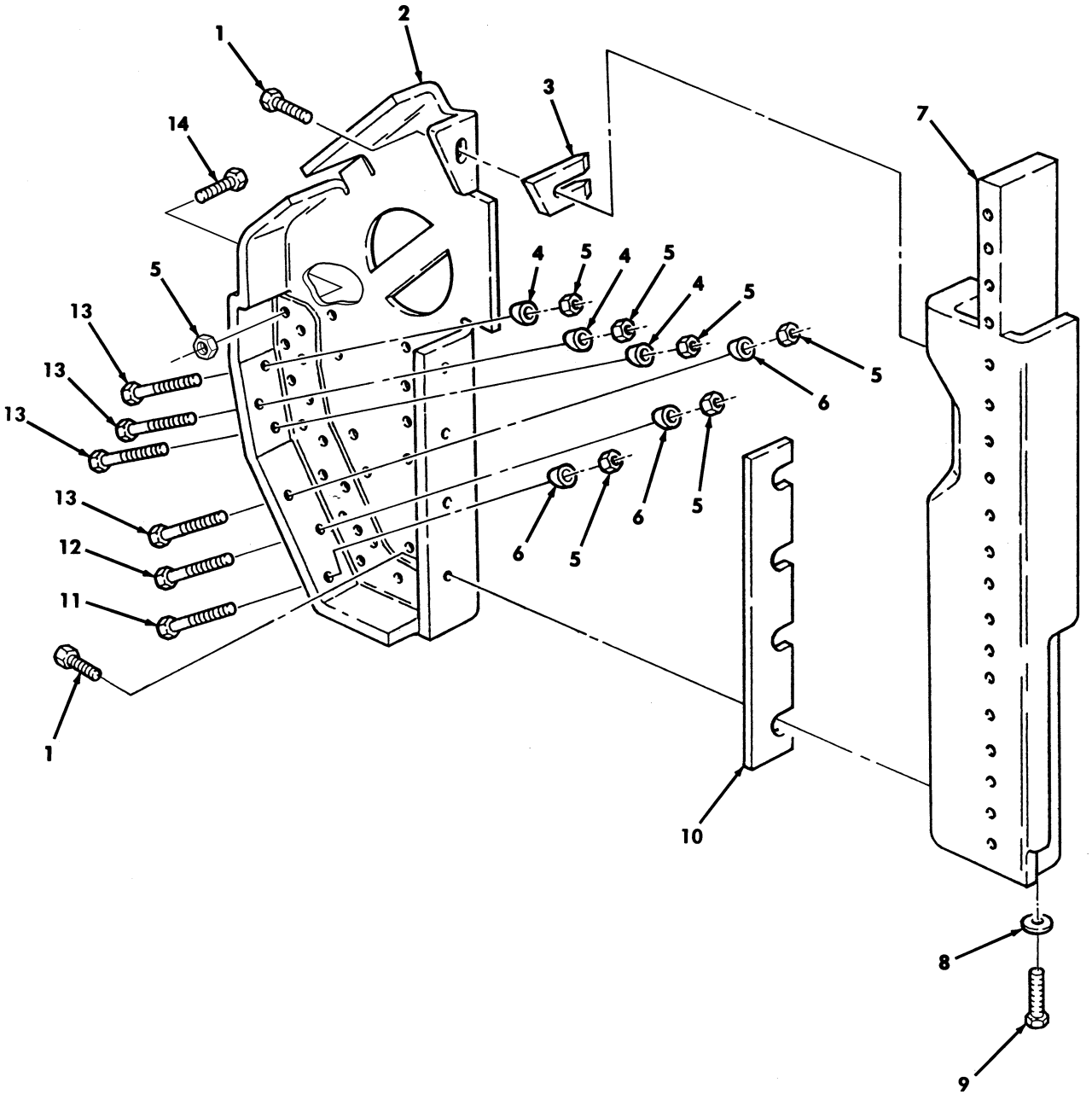

Figure 176. Passenger Side Footwell Armor and Related Parts.

(1) ITEM NO	(2) SMR CODE	(3) NSN	(4) CAGEC	(5) PART NUMBER	(6) DESCRIPTION AND USABLE ON CODES(UOC)	(7) QTY
					GROUP 1801 BODY,CAB,HOOD,AND HULL ASSEMBLY	
					FIG. 176 PASSANGER SIDE FOOTWELL ARMOR AND RELATED PARTS	
* 1	PAOZZ	5305000680511	80204	B1821BH038C125N	SCREW,CAP HEXAGON H .375-16 X 1.25. UOC:XBB	5
2	XAFZZ		6W728	4660450	LINER,KICK PANEL OUTER RIGHT..... UOC:XBB	1
3	PFOZZ	5365014362535	6W728	4660466	SPACER,PLATE UPPER RIGHT..... UOC:XBB	1
4	PAOZZ	5365014361230	6W728	4660869	SPACER,RING KICK PANEL WEDGE,SMALL. UOC:XBB	3
* 5	PAFZZ	5310014398177	6W728	4397064-005	NUT,SELF-LOCKING,HE .375-16..... UOC:XBB	15
6	PAOZZ	5365014361324	6W728	4660868	SPACER,RING KICK PANEL WEDGE,LARGE. UOC:XBB	3
* 7	XDFZZ		6W728	4660456	REINFORCEMENT "A" PILLAR RIGHT SIDE UOC:XBB	1
8	PAOZZ	5310014192143	6W728	4397005-014	WASHER,FLAT .406..... UOC:XBB	2
* 9	PAOZZ	5305005434372	80204	B1821BH038C075N	SCREW,CAP HEXAGON H .375-16 X .750. UOC:XBB	2
10	PFOZZ	5365014362533	6W728	4660465	SPACER,PLATE LOWER RIGHT..... UOC:XBB	1
* 11	PAOZZ	5305007813928	80204	B1821BH038C400N	SCREW,CAP HEXAGON H .375-16 X 4.00. UOC:XBB	1
12	PAOZZ	5305014750404	6W728	4397000-072	SCREW,CAP HEXAGON H .375-16 X 3.50. UOC:XBB	1
* 13	PAOZZ	5305008465703	80204	B1821BH038C300N	SCREW,CAP HEXAGON H .375-16 X 3.00. UOC:XBB	4
* 14	PAOZZ	5325007252317	80204	B1821BH038C150N	SCREW,CAP HEXAGON H .375-16 X 1.50.. UOC:XBB	15

END OF FIGURE

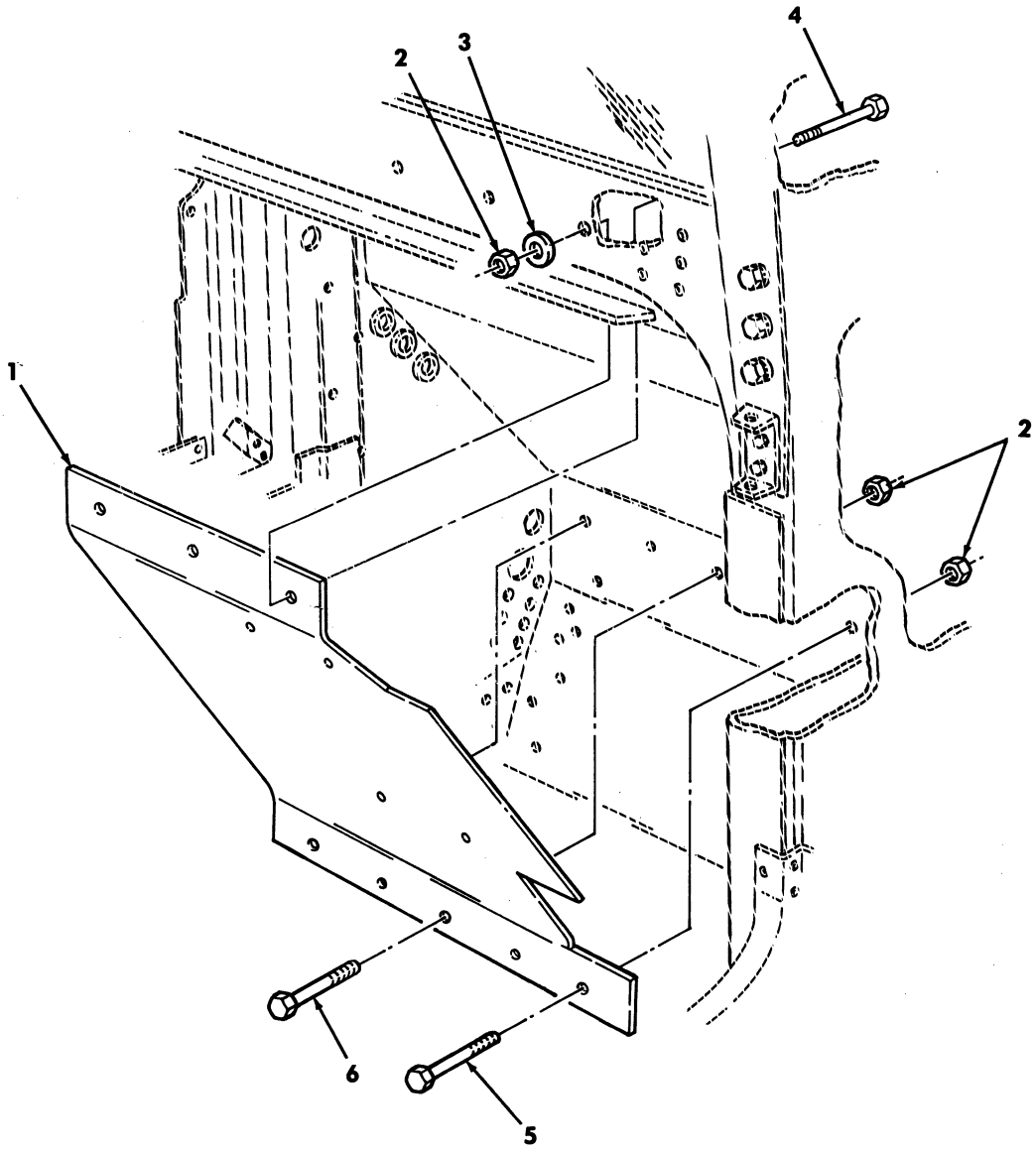

Figure 177. Passenger Side Upper Cowl Assembly and Mounting Hardware.

(1) ITEM NO	(2) SMR CODE	(3) NSN	(4) CAGEC	(5) PART NUMBER	(6) DESCRIPTION AND USABLE ON CODES(UOC)	(7) QTY
					GROUP 1801 BODY,CAB,HOOD,AND HULL ASSEMBLY	
					FIG. 177 PASSENGER SIDE UPPER COWL ASSEMBLY AND MOUNTING HARDWARE	
* 1	XDFZZ		6W728	4660462	LINER,COWL UPPER RIGHT..... UOC:XBB	1
* 2	PAOZZ	5310014398177	6W728	4397064-005	NUT,SELF-LOCKING,HE .375-16..... UOC:XBB	8
3	PAOZZ	5310014192413	6W728	4397005-014	WASHER,FLAT .406..... UOC:XBB	3
* 4	PAOZZ	5305014753158	80204	B1821BH038C650N	SCREW,CAP,HEXAGON H .375-16 X 6.50. UOC:XBB	3
* 5	PAOZZ	5305014366377	6W728	4397000-064	SCREW,CAP HEXAGON H .375-16 X 1.50. UOC:XBB	1
* 6	PAOZZ	5305007813926	80204	B1821BH038C225N	SCREW,CAP,HEXAGON H...375-16 X 2.25. UOC:XBB	3

END OF FIGURE

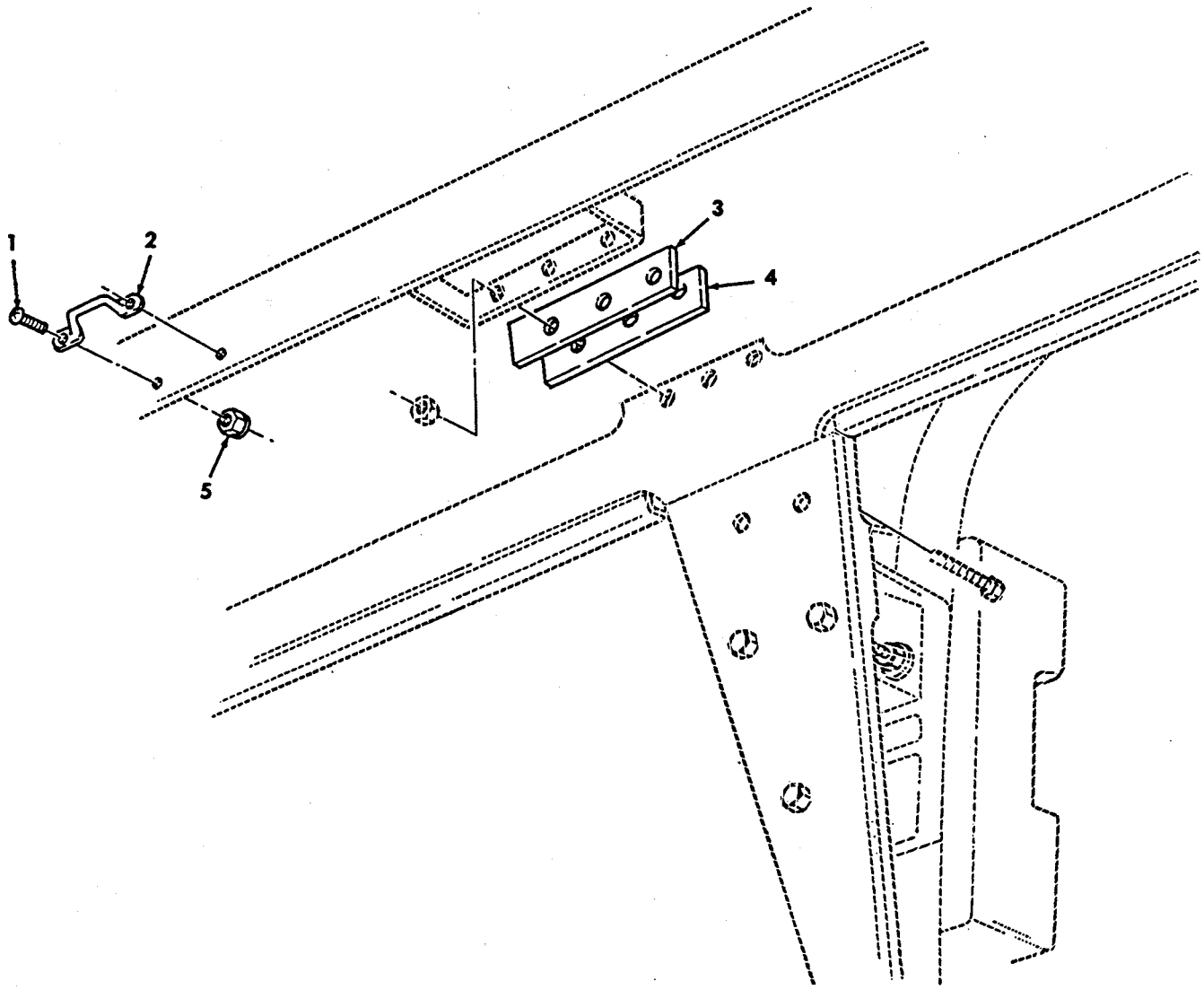

Figure 178. Roof Shims, Footman Loops, and Mounting Hardware.

(1) ITEM NO	(2) SMR CODE	(3) NSN	(4) CAGEC	(5) PART NUMBER	(6) DESCRIPTION AND USABLE ON CODES(UOC)	(7) QTY
					GROUP 1801 BODY,CAB,HOOD,AND HULL ASSEMBLY	
					FIG. 178 ROOF SHIMS,FOOTMAN LOOPS, AND MOUNTING HARDWARE	
1	PAOZZ	5305014403673	6W728	4397062-071	SCREW,MACHINE .190-32 X .438..... UOC:XBB	4
2	PAOZZ	2510011995748	19207	12338839-8	LOOP,FOOTMAN,FLAT..... UOC:XBB	2
3	PAOZZ	5365014333729	6W728	4660899-011	SHIM .030..... UOC:XBB	2
4	PAOZZ	5365014333728	6W728	4660899-012	SHIM .060..... UOC:XBB	2
5	PAOZZ	5310014398180	6W728	4397073-003	NUT,SELF-LOCKING,HE .190-32..... UOC:XBB	4

END OF FIGURE

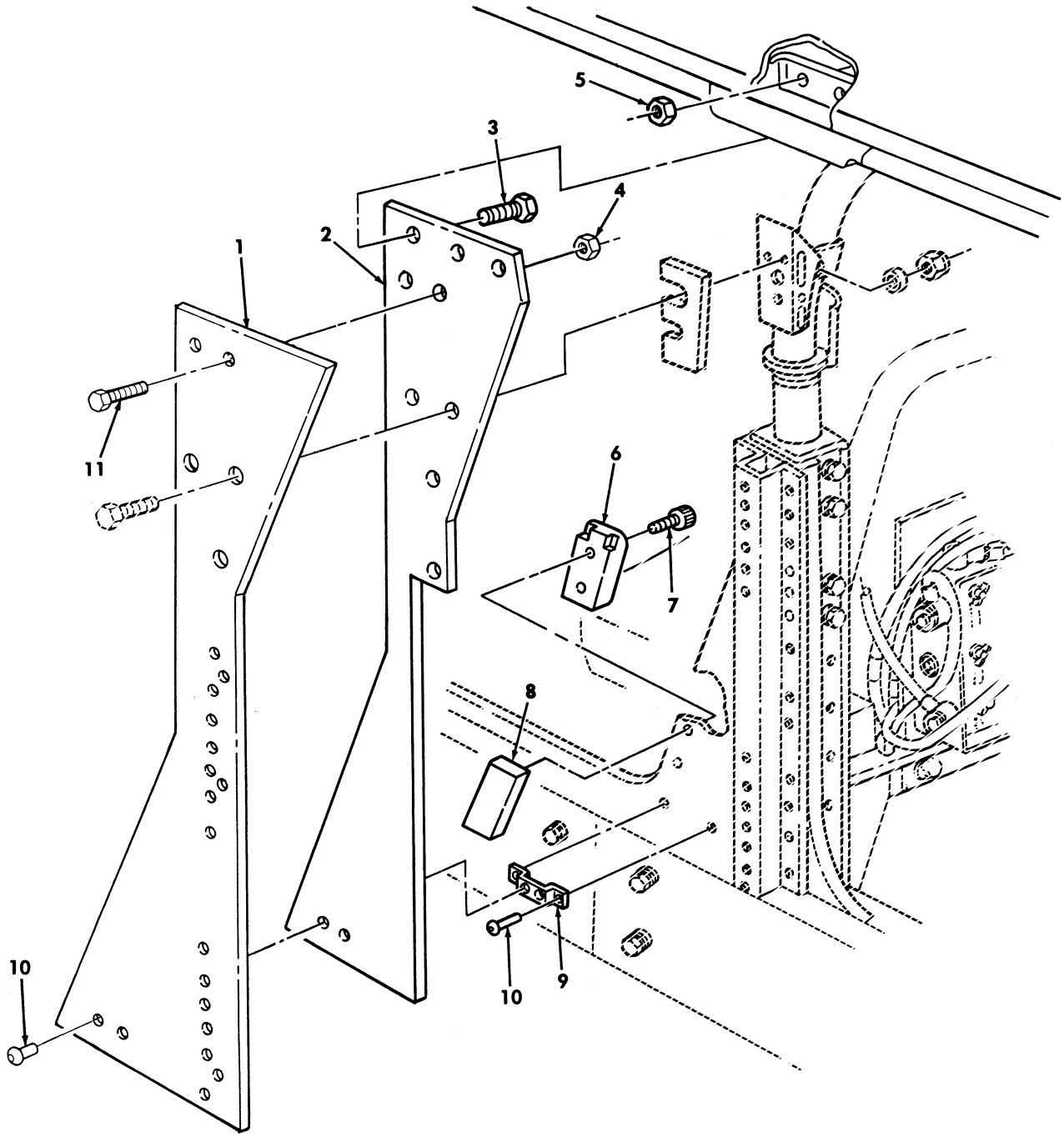

Figure 179. B-Pillar Armor and Mounting Hardware.

(1) ITEM NO	(2) SMR CODE	(3) NSN	(4) CAGEC	(5) PART NUMBER	(6) DESCRIPTION AND USABLE ON CODES(UOC)	(7) QTY
					GROUP 1801 BODY,CAB,HOOD,AND HULL ASSEMBLY	
					FIG. 179 B-PILLAR ARMOR AND MOUNTING HARDWARE	
1	PBOZZ	2540014360770	6W728	4660865	ARMOR,SUPPLEMENTAL LEFT SIDE..... UOC:XBB	1
1	PBOZZ	2540014357696	6W728	4660866	ARMOR,SUPPLEMENTAL RIGHT SIDE..... UOC:XBB	1
2	PBOZZ	2540014455929	6W728	4660334	ARMOR,SUPPLEMENTAL B-PILLAR,RIGHT.. UOC:XBB	1
2	PBOZZ	2540014446368	6W728	4660335	ARMOR,SUPPLEMENTAL B-PILLAR,LEFT... UOC:XBB	1
* 3	PAOZZ	5305002264831	80204	B1821BH031C150N	SCREW,CAP HEXAGON H .313-18 X 1.50. UOC:XBB	3
4	PAOZZ	5310014398173	6W728	4397064-001	NUT,SELF-LOCKING,HE .250-20..... UOC:XBB	4
5	PAOZZ	5310014398172	6W728	4397064-003	NUT,SELF-LOCKING,HE .313-18..... UOC:XBB	3
6	PAOZZ	5340014364350	6W728	4660914	PLATE,MOUNTING FRONT,LOWER..... UOC:XBB	2
7	PAOZZ	5305014750878	6W728	4397071-030	SCREW,CAP,SOCKET HE .250-20 X .750. UOC:XBB	4
8	PAOZZ	5365014361232	6W728	4660915	SPACER,RING FRONT LOWER..... UOC:XBB	2
9	PAOZZ	5340014342861	6W728	4660404	BRACKET,MULTIPLE AN "B" PILLAR..... UOC:XBB	2
* 10	PAOZZ	5320011509681	05693	SSPV-810	RIVET,BLIND .250 X .350-.625..... UOC:XBB	8
* 11	PAOZZ	5305002253843	80204	B1821BH025C100N	SCREW,CAP,HEXAGON H .250-20 X 1.00. UOC:XBB	4

END OF FIGURE

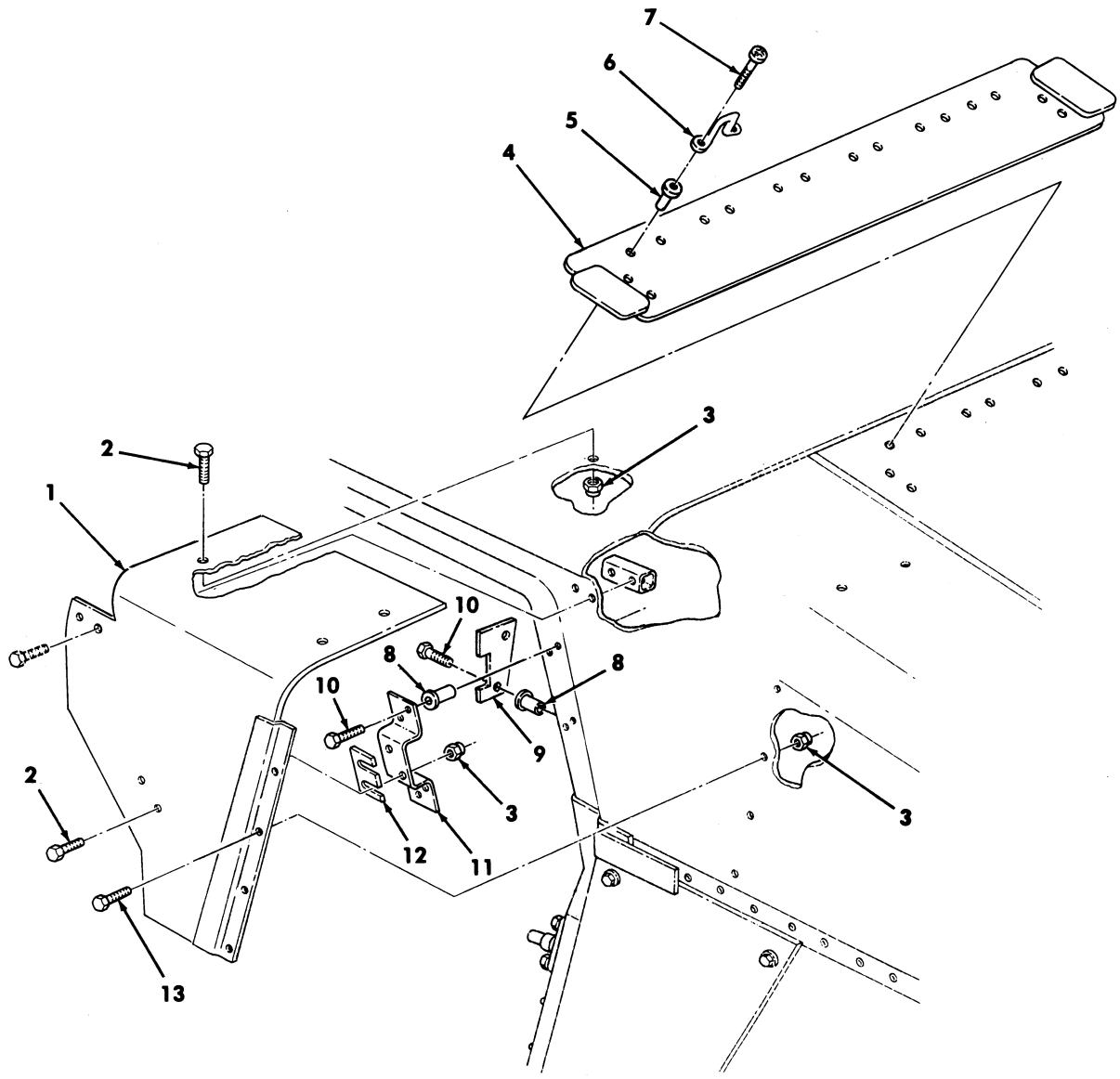

Figure 180. C-Pillar Armor and Related Parts.

(1) ITEM NO	(2) SMR CODE	(3) NSN	(4) CAGEC	(5) PART NUMBER	(6) DESCRIPTION AND USABLE ON CODES(UOC)	(7) QTY
					GROUP 1801 BODY,CAB,HOOD,AND HULL ASSEMBLY	
					FIG. 180 C-PILLAR ARMOR AND RELATED PARTS	
1	PBOZZ	2540014356303	6W728	4660440	ARMOR,SUPPLEMENTAL, UPPER-RIGHT.... UOC:XBB	1
1	PBOZZ	2540014356299	6W728	4660441	ARMOR,SUPPLEMENTAL, UPPER-LEFT..... UOC:XBB	1
* 2	PAOZZ	5305000680509	80204	B1821BH025C125N	SCREW,CAP HEXAGON H .250-20 X 1.25. UOC:XBB	6
3	PAOZZ	5310014398173	6W728	4397064-001	NUT,SELF-LOCKING,HE .250-20..... UOC:XBB	10
4	PFOZZ	2540014350466	6W728	4660405	ARMOR,SUPPLEMENTAL,..... UOC:XBB	1
5	PAOZZ	5325014110066	78276	ALS4-1024-130	INSERT,SCREW THREAD..... UOC:XBB	16
6	PAOZZ	5340013145957	19207	12338839-1	LOOP,STRAP FASTENER..... UOC:XBB	8
7	PAOZZ	5305014403664	6W728	4397062-076	SCREW,MACHINE OVL HD LKG .190-24 X 1.00..... UOC:XBB	16
8	PAOZZ	5325013942414	78276	ALS7-420-165	INSERT,SCREW THREAD .250-20..... UOC:XBB	12
9	PFOZZ	2540014346623	6W728	4660312	ARMOR,SUPPLEMENTAL,..... UOC:XBB	2
10	PAOZZ	5306014376309	6W728	4397010-006	BOLT,MACHINE .250-20 X .750..... UOC:XBB	12
11	PFOZZ	5340014342842	6W728	4660418	BRACKET,MULTIPLE AN..... UOC:XBB	2
12	PAOZZ	5365014387025	6W728	4660963-011	SHIM .063..... UOC:XBB	1
12	PAOZZ	5365014387026	6W728	4660963-012	SHIM .125..... UOC:XBB	1
* 13	PAOZZ	5305000687837	80204	B1821BH025C063N	SCREW,CAP HEXAGON H .250-20 X .625. UOC:XBB	4

END OF FIGURE

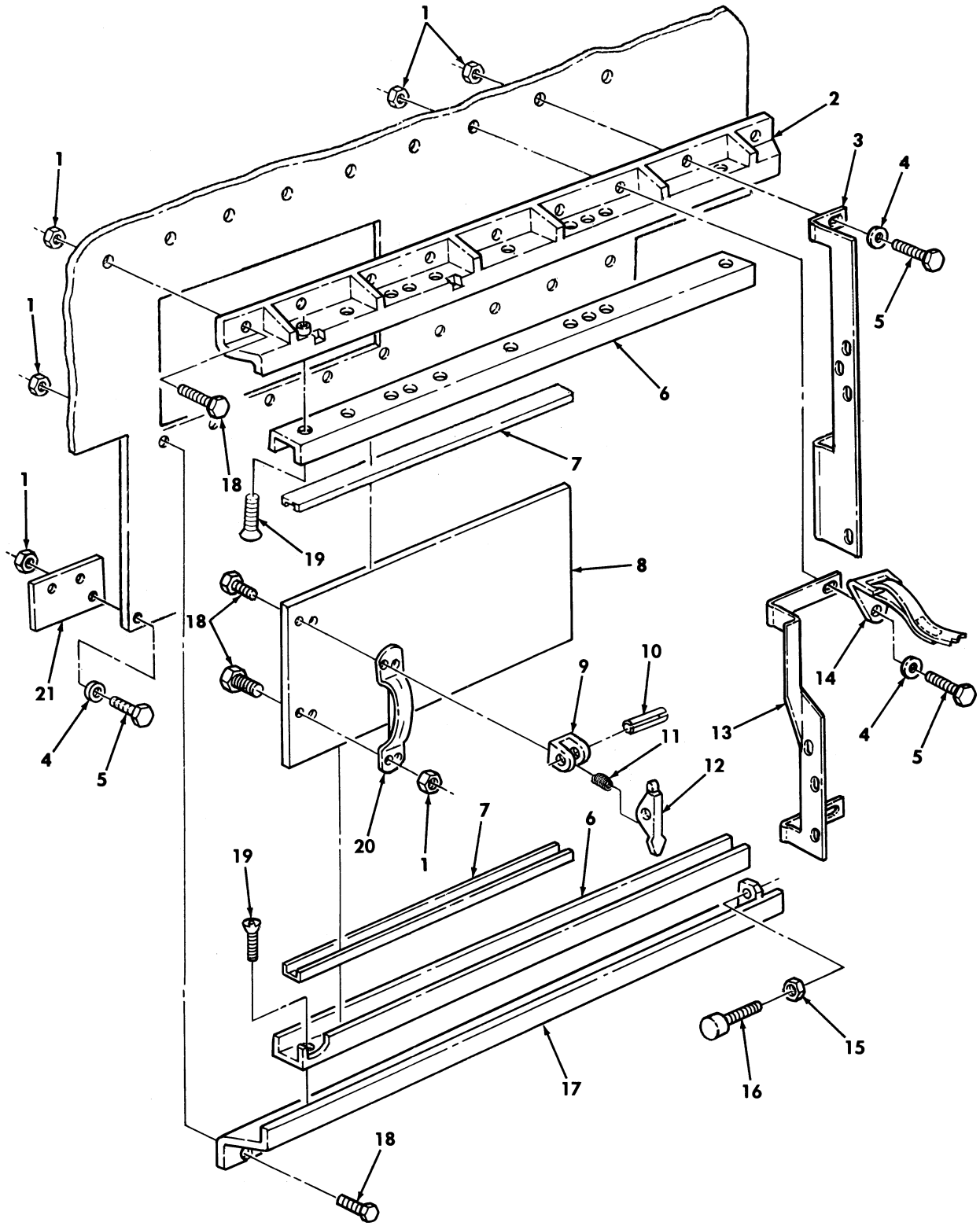

Figure 181. Rear Partition and Related Parts.

(1) ITEM NO	(2) SMR CODE	(3) NSN	(4) CAGEC	(5) PART NUMBER	(6) DESCRIPTION AND USABLE ON CODES(UOC)	(7) QTY
					GROUP 1801 BODY,CAB,HOOD,AND HULL ASSEMBLY	
					FIG. 181 REAR PARTITION AND RELATED PARTS	
1	PAFZZ	5310014398173	6W728	4397064-001	NUT,SELF-LOCKING,HE 1/4-20..... UOC:XBB	26
2	PFFZZ	2590014345241	6W728	4660542	MOLDING,METAL UPPER..... UOC:XBB	1
3	PAFZZ	5340014746310	6W728	55-04057	BRACKET,MOUNTING REAR A/C MOUNT, L.H..... UOC:XBB	1
4	PAFZZ	5310014357784	6W728	4397005-010	WASHER,FLAT 9/32..... UOC:XBB	5
5	PAFZZ	5305000680509	80204	B1821BH025C125N	SCREW,CAP,HEXAGON H 1/4-20 X 1.25.. UOC:XBB	7
6	PAFZZ	2590014345239	6W728	4660541	MOLDING,METAL..... UOC:XBB	2
7	PAFZZ	2590014345240	6W728	4660540	MOLDING,METAL..... UOC:XBB	2
8	PBFZZ	2540014350082	6W728	4660566	ARMOR,SUPPLEMENTAL..... UOC:XBB	1
9	PFFZZ	2540014345242	6W728	4660557	BASE PLATE,BODY..... UOC:XBB	1
10	PAFZZ	5315000589808	80205	MS16562-253	PIN,SPRING..... UOC:XBB	1
* 11	PAFZZ	5360014749653	56988	S731	SPRING,HELICAL,COMP..... UOC:XBB	1
12	PFFZZ	2540014345244	6W728	4660560	LATCH,DOOR,VEHICULA..... UOC:XBB	1
13	PAFZZ	5340014746310	6W728	55-04056	BRACKET,MOUNTING REAR A/C MOUNT, R.H..... UOC:XBB	1
14	PAFZZ	5340014336115	6W728	4660530	STRAP,WEBBING..... UOC:XBB	1
15	PAFZZ	5310014179042	6W728	4397002-002	NUT,PLAIN,HEXAGON #8-32..... UOC:XBB	1
16	PAFZZ	5340014191255	6W728	4668950	BUMPER,NONMETALLIC..... UOC:XBB	1
17	PAFZZ	2540014350578	6W728	4660803	ARMOR,SUPPLEMENTAL..... UOC:XBB	1
18	PAFZZ	5306000680514	80204	B1821BH025C088N	SCREW,CAP,HEXAGON H 1/4-20 X 7/8... UOC:XBB	21
19	PAFZZ	5305014403664	6W728	4397062-76	SCREW,MACHINE..... UOC:XBB	14
20	PAFZZ	5340014401428	6W728	4397079	HANDLE,BOW..... UOC:XBB	1
21	PAFZZ	5340014753668	6W728	4660567-002	COVER,ACCESS CABLE..... UOC:XBB	1

END OF FIGURE

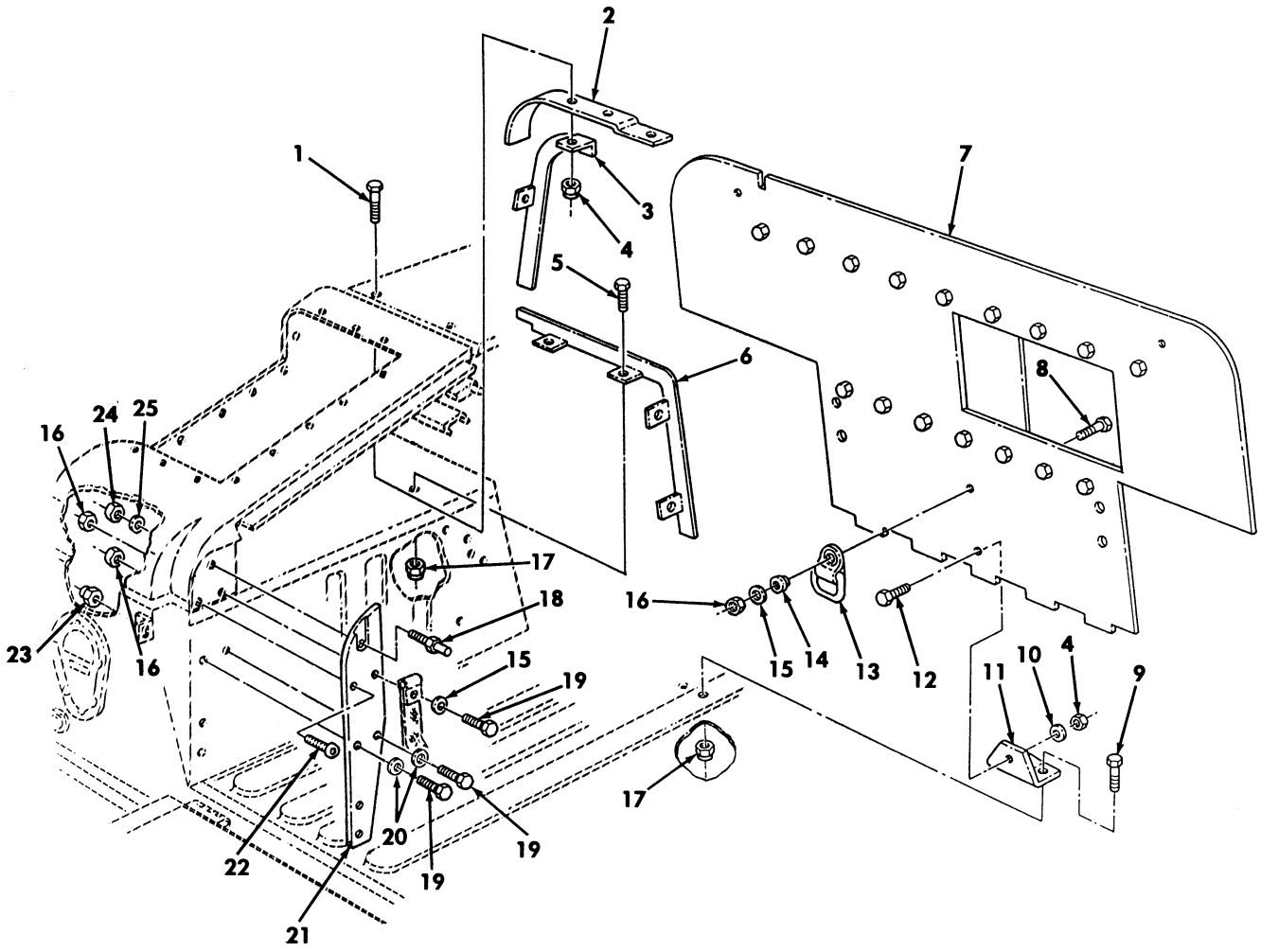

Figure 182. Rear Partition Assembly.

(1) ITEM NO	(2) SMR CODE	(3) NSN	(4) CAGEC	(5) PART NUMBER	(6) DESCRIPTION AND USABLE ON CODES(UOC)	(7) QTY
					GROUP 1801 BODY,CAB,HOOD,AND HULL ASSEMBLY	
					FIG. 182 REAR PARTITION ASSEMBLY	
* 1	PAFZZ	5305000680508	80204	B1821BH025C075N	SCREW,CAP HEXAGON H .250-20 X .750. UOC:XBB	4
2	PFFZZ	2540014350470	6W728	4660429	ARMOR,SUPPLEMENTAL LEFT..... UOC:XBB	1
2	PFFZZ	2540014350984	6W728	4660430	ARMOR,SUPPLEMENTAL RIGHT..... UOC:XBB	1
3	PAFZZ	5365014340107	6W728	4660562	SPACER,SPECIAL SHAP LEFT..... UOC:XBB	1
3	PAFZZ	2590014345152	6W728	4660564	BRACKET,VEHICULAR C RIGHT..... UOC:XBB	1
4	PAFZZ	5310014398173	6W728	4397064-001	NUT,SELF-LOCKING,HE .250-20..... UOC:XBB	7
5	PAFZZ	5306014376309	6W728	4397010-006	BOLT,MACHINE..... UOC:XBB	8
6	PFFZZ	5365014340105	6W728	4660561	SPACER,SPECIAL SHAP LOWER RIGHT.... UOC:XBB	1
6	PAFZZ	2590014345151	6W728	4660563	BRACKET,VEHICULAR C LOWER LEFT..... UOC:XBB	1
7	PBFZZ	2540014346624	6W728	4660565	ARMOR,SUPPLEMENTAL C-PARTITION..... UOC:XBB	1
8	PAFZZ	5305014366377	6W728	4397000-064	SCREW,CAP,HEXAGON H .375-16 X 1.50. UOC:XBB	3
* 9	PAOZZ	5305002253843	80204	B1821BH025C100N	SCREW,CAP HEXAGON H .250-20 X 1.00. UOC:XBB	2
10	PAFZZ	5310014357784	6W728	4397005-010	WASHER,FLAT .281..... UOC:XBB	1
11	PAFZZ	5340014353806	6W728	4660508	BRACKET,MOUNTING..... UOC:XBB	1
* 12	PAFZZ	2540014346624	80204	B1821BH025C088N	SCREW,CAP HEXAGON H .250-20 X .875. UOC:XBB	1
13	PAFZZ	3990014325370	19207	12446987	TIE DOWN,CARGO,VEHI..... UOC:XBB	3
14	PAFZZ	5365014340856	6W728	4660525	SPACER,RING..... UOC:XBB	3
15	PAFZZ	5310014192413	6W728	4397005-014	WASHER,FLAT..... UOC:XBB	5
16	PAFZZ	5310014398177	6W728	4397064-005	NUT,SELF-LOCKING,HE .375-16..... UOC:XBB	7
17	PAFZZ		6W728	4397050-025	NUT,SELF-LOCKING .250-20..... UOC:XBB	10
18	PAFZZ	5340014401435	34623	5596198	STUD,FRICTION CATCH..... UOC:XBB	2
* 19	PAFZZ	5305000680511	80204	B1821BH038C125N	SCREW,CAP HEXAGON H .375-16 X 1.25. UOC:XBB	10
20	PAFZZ	5310014363742	6W728	4397005-015	WASHER,FLAT .438..... UOC:XBB	8
21	PFFZZ	2540012523386	34623	12339610-2	PLATE,STRIKER,MOUNT R.H..... UOC:XBB	1

(1) ITEM NO	(2) SMR CODE	(3) NSN	(4) CAGEC	(5) PART NUMBER	(6) DESCRIPTION AND USABLE ON CODES(UOC)	(7) QTY
21	PFFZZ	2540012528460	19207	12339610-1	PLATE,STRIKER,MOUNT L.H..... UOC:XBB	1
22	PAFZZ	5305014491001	19207	12342675	SCREW,CAP SOCKET HE..... UOC:XBB	2
* 23	PAFZZ	5325014749732	78276	ALS7-616-150	INSERT,SCREW THREAD .375-16..... UOC:XBB	6
24	PAFZZ	5310014398179	6W728	4397064-013	NUT,SELF-LOCKING,HE .625-11..... UOC:XBB	2
25	PAFZZ	5310011971100	19207	12339599	WASHER,FLAT .625..... UOC:XBB	2

END OF FIGURE

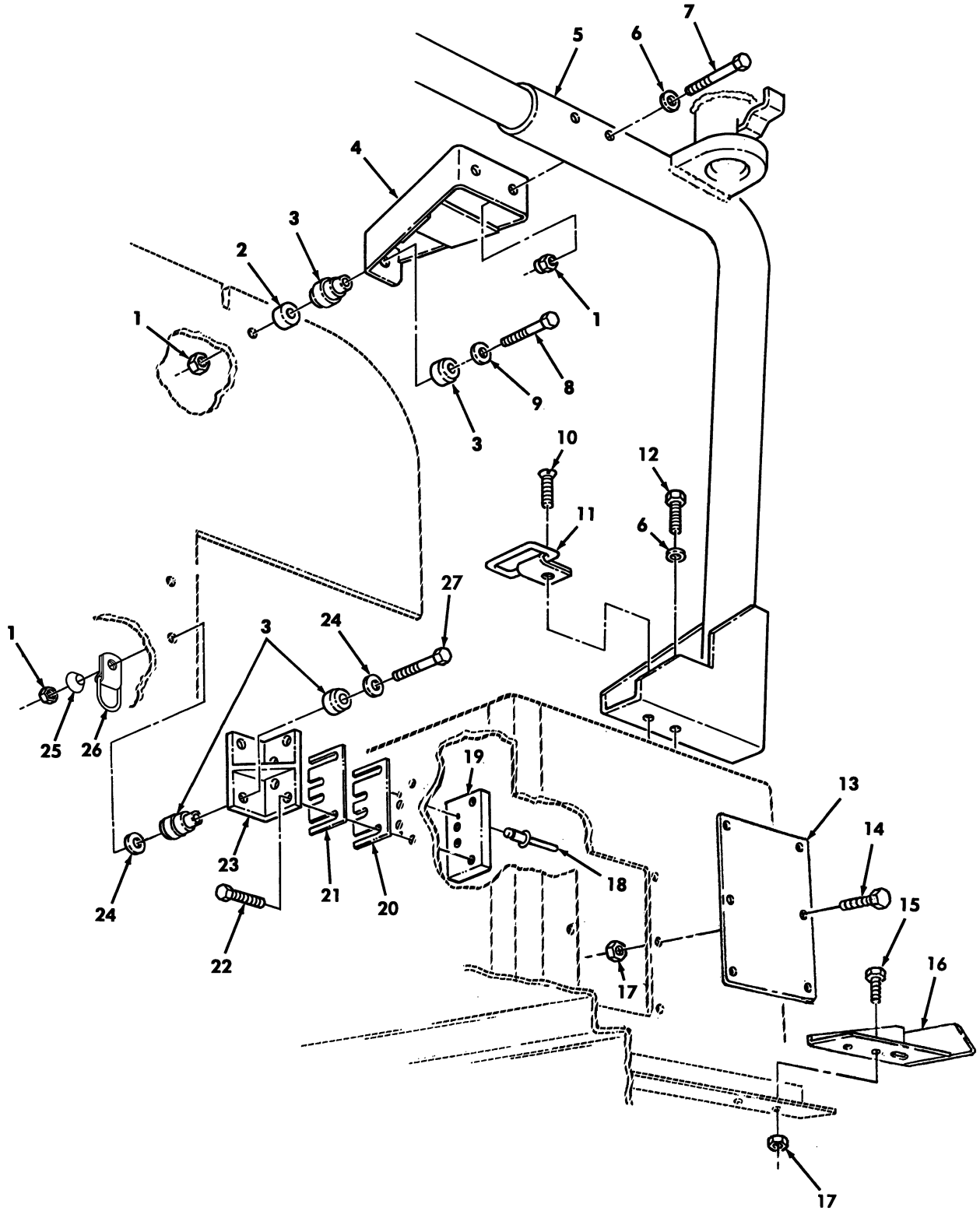

Figure 183. Rear Partition Mounting Hardware.

(1) ITEM NO	(2) SMR CODE	(3) NSN	(4) CAGEC	(5) PART NUMBER	(6) DESCRIPTION AND USABLE ON CODES(UOC)	(7) QTY
					GROUP 1801 BODY,CAB,HOOD,AND HULL ASSEMBLY	
					FIG. 183 REAR PARTITION MOUNTING HARDWARE	
1	PAFZZ	5310014398177	6W728	4397064-005	NUT,SELF-LOCKING,HE .375-16..... UOC:XBB	10
2	PFFZZ	5365014340104	6W728	4660523	SPACER,SLEEVE..... UOC:XBB	2
* 3	PAFZZ	5365014177792	6W728	4668958-002	BUSHING,NONMETALLIC..... UOC:XBB	6
4	PAFZZ	2540014345243	6W728	4660521	ARMOR,SUPPLEMENTAL RIGHT..... UOC:XBB	1
4	PAFZZ	5340014352844	6W728	4660522	BRACKET,MOUNTING LEFT..... UOC:XBB	1
5	PAFZZ	4710014346627	6W728	4660711	TUBE,STRUCTURAL..... UOC:XBB	1
6	PAFZZ	5310014192413	6W728	4397005-014	WASHER,FLAT .406..... UOC:XBB	6
7	PAFZZ	5305008080864	80204	B1821BH038C325N	SCREW,CAP,HEXAGON H .375-16 X 3.25. UOC:XBB	4
* 8	PAFZZ	5305008465703	80204	B1821BH038C300N	SCREW,CAP HEXAGON H .375-16 X 3.00. UOC:XBB	2
9	PAFZZ	5310014363742	6W728	4397005-015	WASHER,FLAT .438..... UOC:XBB	2
10	PAFZZ	5305014403669	6W728	4397066-147	SCREW,MACHINE .438-20 X 1.75..... UOC:XBB	3
11	PAFZZ	3990014325370	19207	12446987	TIE DOWN,CARGO,VEHI..... UOC:XBB	3
* 12	PAFZZ	5305007252317	80204	B1821BH038C150N	SCREW,CAP HEXAGON H .375-16 X 1.50. UOC:XBB	2
13	PAFZZ	5340014364351	6W728	4660945	COVER,ACCESS..... UOC:XBB	1
* 14	PAFZZ	5305002253843	80204	B1821BH025C100N	SCREW,CAP,HEXAGON H .250-20 X 1.00. UOC:XBB	6
15	PAFZZ	5306014376309	6W728	4397010-006	BOLT,MACHINE .250-20 X .750..... UOC:XBB	2
16	PAFZZ	5340014403804	6W728	4660909	BRACKET,MOUNTING L.H..... UOC:XBB	1
16	PAFZZ	5340014364349	6W728	4660910	BRACKET,MOUNTING R.H..... UOC:XBB	1
* 17	PAFZZ	5325013942414	78276	ALS7-420-165	NUT,UPSET .250-20..... UOC:XBB	10
18	PAFZZ	5320014365552	6W728	4397042-621	RIVET,BLIND .188 X .376-.500..... UOC:XBB	4
19	PAFZZ	5310014341377	6W728	4660544	PLATE,LOWER..... UOC:XBB	2
20	PAFZZ	5365014396498	6W728	4660545-012	SHIM,LOWER .060..... UOC:XBB	V
21	PAFZZ	5365014376323	6W728	4660545-011	SHIM,LOWER .030..... UOC:XBB	V
22	PAFZZ	5305002253843	80204	B1821BH025C100N	BOLT,MACHINE 1/4-20 X 1.00.....	8

(1) ITEM NO	(2) SMR CODE	(3) NSN	(4) CAGEC	(5) PART NUMBER	(6) DESCRIPTION AND USABLE ON CODES(UOC)	(7) QTY
					UOC:XBB	
23	PAFZZ	5340014339281	6W728	4660520	BRACKET,MOUNTING.....	2
					UOC:XBB	
24	PAFZZ	5310014357791	6W728	4397005-075	WASHER,FLAT.....	4
					UOC:XBB	
25	PAFZZ	5365014340856	6W728	4660525	SPACER,RING.....	2
					UOC:XBB	
26	PAFZZ	2590013366271	19207	12342371	BRACKET,VEHICULAR C.....	2
					UOC:XBB	
* 27	PAFZZ	5305006388920	80204	B1821BH038C225N	SCREW,CAP,HEXAGON H UPPER,.375-16 X 2.25.....	2
					UOC:XBB	
* 27	PAFZZ	5305004322866	80204	B1821BH038C250N	SCREW,CAP,HEXAGON H LOWER,.375-16 X 2.50.....	2
					UOC:XBB	

END OF FIGURE

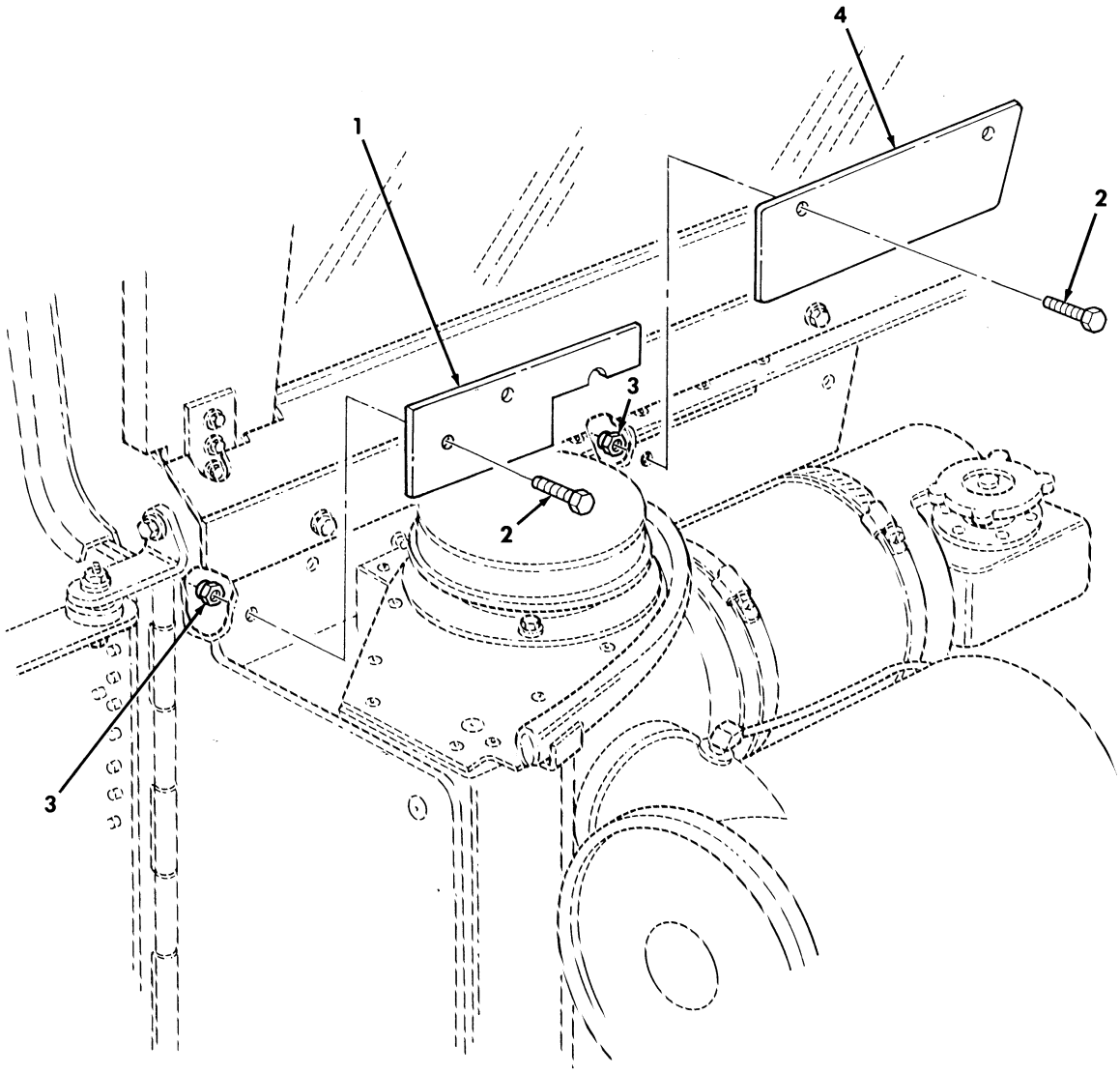

Figure 184. Firewall Armor and Mounting Hardware.

(1) ITEM NO	(2) SMR CODE	(3) NSN	(4) CAGEC	(5) PART NUMBER	(6) DESCRIPTION AND USABLE ON CODES(UOC)	(7) QTY
					GROUP 1801 BODY,CAB,HOOD,AND HULL ASSEMBLY	
					FIG. 184 FIREWALL ARMOR AND MOUNTING HARDWARE	
1	PBOZZ	2540014203823	6W728	4668507	ARMOR,SUPPLEMENTAL, FIREWALL RIGHT FRONT UPPER..... UOC:XBB	1
* 2	PAOZZ	5305002253843	80204	B1821BH025C100N	SCREW,CAP HEXAGON H .250-20 X 1.00. UOC:XBB	4
3	PAOZZ	5325013942414	78276	ALS7-420-165	INSERT,SCREW THREAD .250-20..... UOC:XBB	4
4	PAOZZ	2540014203824	6W728	4668517	ARMOR,SUPPLEMENTAL, FIREWALL CENTER UPPER..... UOC:XBB	1

END OF FIGURE

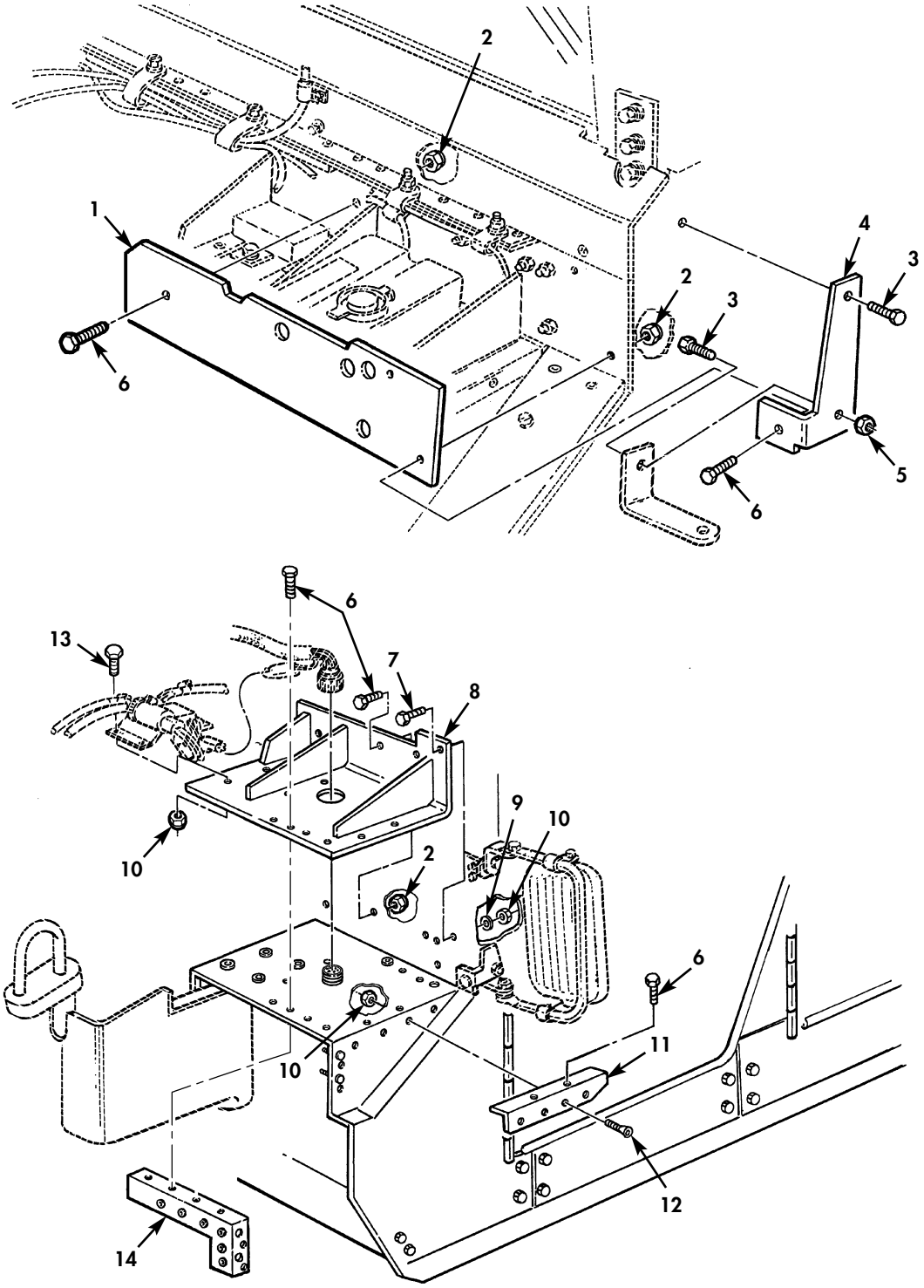

Figure 185. Firewall Armor, Side Mirror Bracket, and Related Parts.

(1) ITEM NO	(2) SMR CODE	(3) NSN	(4) CAGEC	(5) PART NUMBER	(6) DESCRIPTION AND USABLE ON CODES(UOC)	(7) QTY
					GROUP 1801 BODY,CAB,HOOD,AND HULL ASSEMBLY	
					FIG. 185 FIREWALL ARMOR,SIDE MIRROR BRACKET,AND RELATED PARTS	
1	PBOZZ	2540014203822	6W728	4668502	ARMOR,SUPPLEMENTAL LEFT FRONT-UPPER..... UOC:XBB	1
2	PAOZZ	5325013942414	78276	ALS7-420-165	INSERT,SCREW THREAD 1/4-20..... UOC:XBB	3
3	PAOZZ	5305014206637	6W728	4397000-034	SCREW,CAP,HEXAGON H 5/16-18 x 1.00 UOC:XBB	2
4	PAOZZ	2540014357698	6W728	4660951	ARM,REARVIEW MIRROR LEFT LOWER..... UOC:XBB	1
5	PAOZZ	5310014398172	6W728	4397064-003	NUT,SELF-LOCKING,HE 5/16-18..... UOC:XBB	1
* 6	PAOZZ	5305002253843	80204	B1821BH025C100N	SCREW,CAP,HEXAGON H 1/4-20 X 1.00.. UOC:XBB	11
7	PAOZZ	5306014307399	6W728	4397000-006	BOLT,MACHINE 1/4-20 X 3/4..... UOC:XBB	2
* 8	PAOZZ		6W728	4660929	SUPPORT,FRAME..... UOC:XBB	1
9	PAOZZ	5310014398181	6W728	4397083-001	WASHER,FLAT .387..... UOC:XBB	2
10	PAOZZ	5310014398173	6W728	4397064-001	NUT,SELF-LOCKING,HE 1/4-20..... UOC:XBB	6
11	PAOZA	5340014338426	6W728	4660813	BRACKET,ANGLE LEFT FRONT..... UOC:XBB	1
* 12	PAOZZ		6W728	4397056-094	SCREW,MACHINE 1/4-20 X 1.25..... UOC:XBB	4
13	PAOZZ	5325014203005	78276	ALS7-1032-130	INSERT,SCREW THREAD #10-32..... UOC:XBB	4
* 14	PAOZZ	5340014338422	6W728	4660812	BRACKET,ANGLE LEFT..... UOC:XBB	1

END OF FIGURE

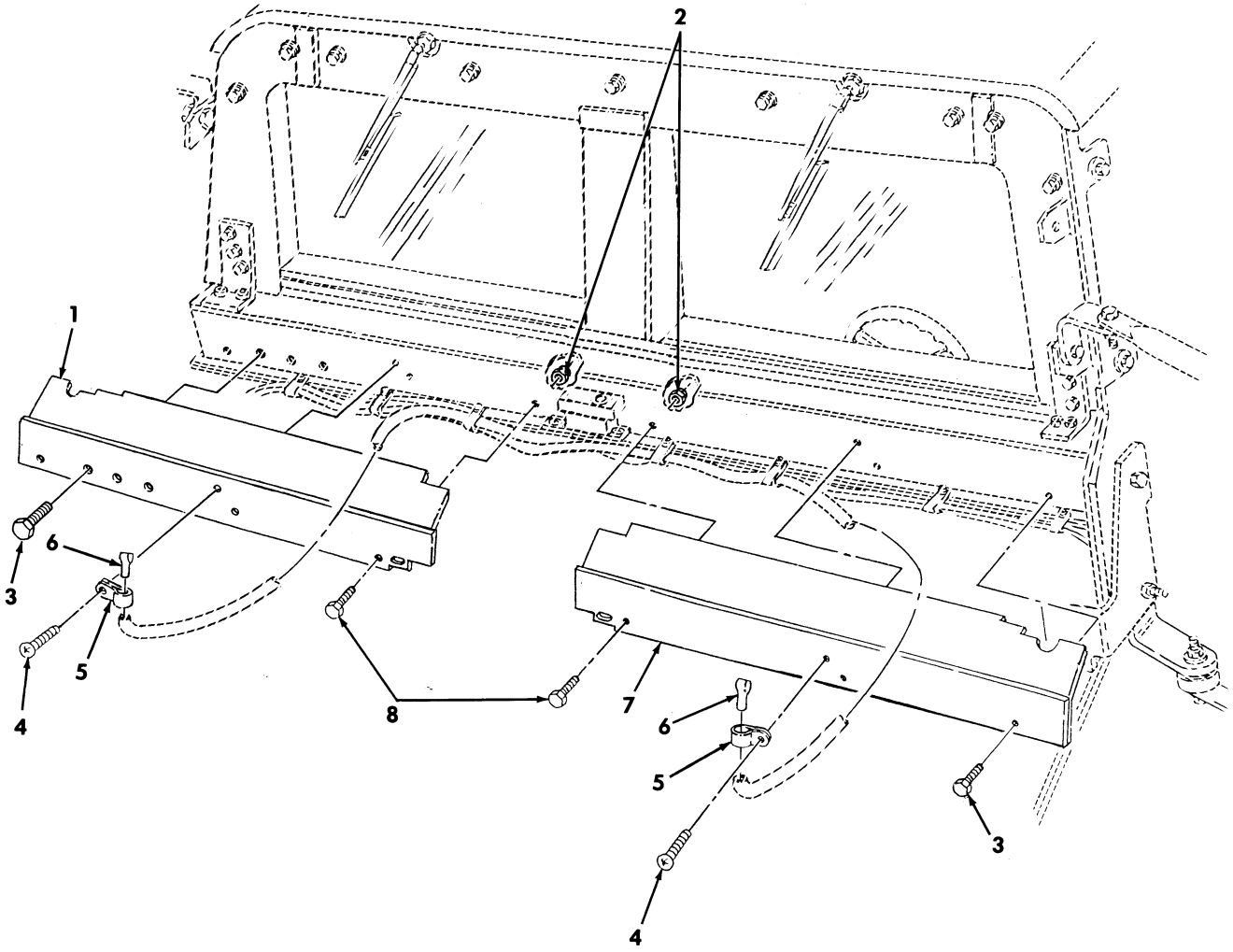

Figure 186. Windshield Deflector Subassemblies and Related Parts.

(1) ITEM NO	(2) SMR CODE	(3) NSN	(4) CAGEC	(5) PART NUMBER	(6) DESCRIPTION AND USABLE ON CODES(UOC)	(7) QTY
					GROUP 1801 BODY,CAB,HOOD,AND HULL ASSEMBLY	
					FIG. 186 WINDSHIELD DEFLECTOR SUBASSEMBLIES AND RELATED PARTS	
1	PBOZZ	2540014343995	6W728	4660843	ARMOR,SUPPLEMENTAL, R.H..... UOC:XBB	1
2	PAOZZ	5325013942414	78276	ALS7-420-165	INSERT,SCREW THREAD .250-20..... UOC:XBB	6
* 3	PAOZZ	5305002253843	80204	B1821BH025C100N	SCREW,CAP,HEXAGON H .250-20 X 1.00. UOC:XBB	2
4	PAOZZ	5305014750290	6W728	4397089-054	SCREW,MACHINE .164-32 X .50..... UOC:XBB	2
5	PAOZZ	5340011345937	70655	9382	CLAMP,LOOP CLAMP STEEL INSULATED CLOSED .312 ID..... UOC:XBB	2
6	PAOZZ	2540014364236	6W728	4668243	NOZZLE,WINDSHIELD W..... UOC:XBB	2
* 7	PBOZZ	2530014201883	6W728	4668563	ARMOR,SUPPLEMENTAL L.H..... UOC:XBB	1
8	PAOZZ	5305000680509	80204	B1821BH025C125N	SCREW,CAP,HEXAGON H .250-20 X 1.25. UOC:XBB	5

END OF FIGURE

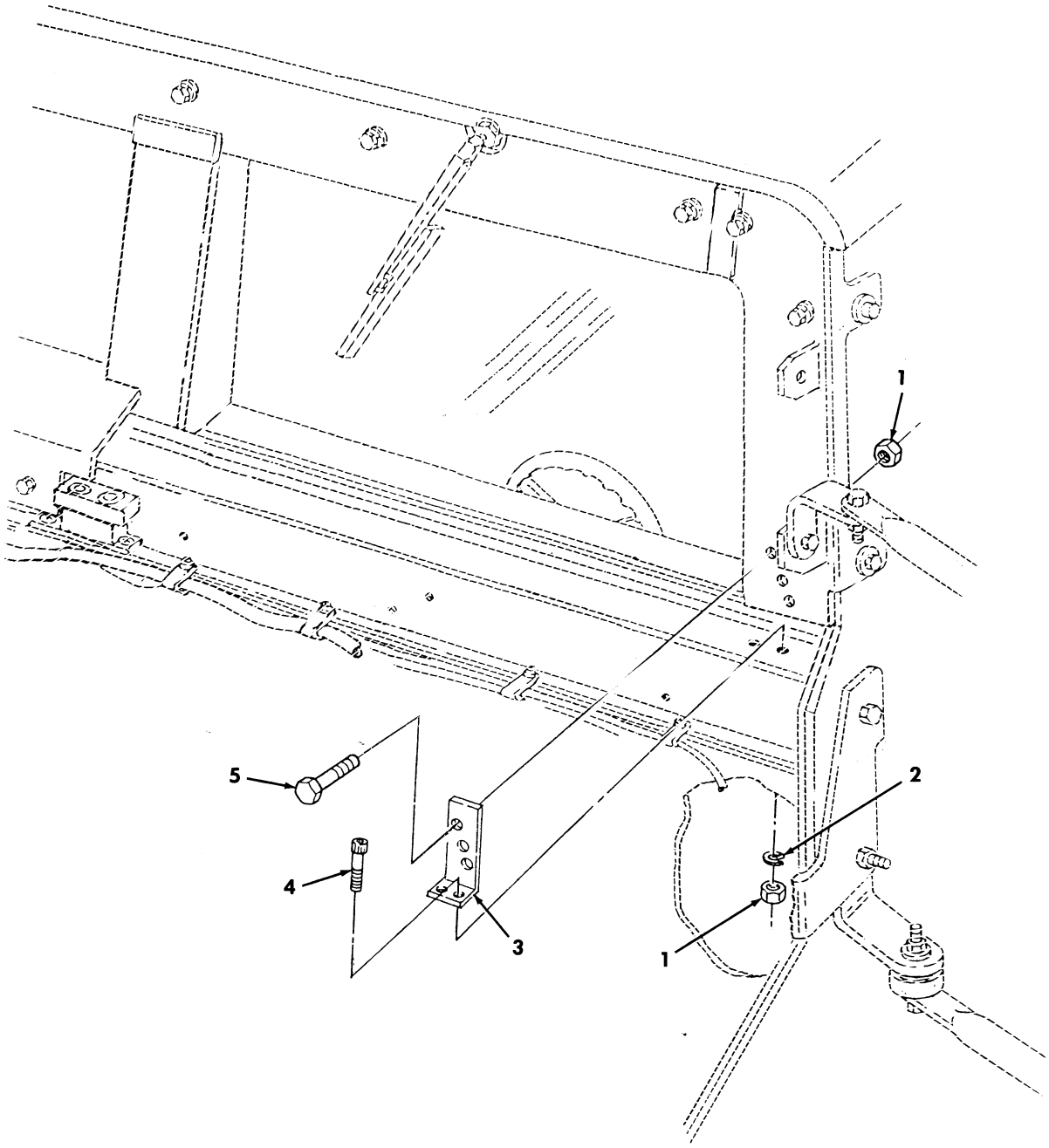

Figure 187. Windshield Support Bracket and Mounting Hardware.

(1) ITEM NO	(2) SMR CODE	(3) NSN	(4) CAGEC	(5) PART NUMBER	(6) DESCRIPTION AND USABLE ON CODES(UOC)	(7) QTY
					GROUP 1801 BODY,CAB,HOOD,AND HULL ASSEMBLY	
					FIG. 187 WINDSHIELD SUPPORT BRACKET AND MOUNTING HARDWARE	
1	PAOZZ	5310014398172	6W728	4397064-003	NUT,SELF-LOCKING,HE .313-18..... UOC:XBB	10
2	PAOZZ	5310014194436	6W728	4397037-006	WASHER,LOCK .313..... UOC:XBB	4
3	PAOZZ	5340014195189	6W728	4668571	BRACKET,MOUNTING L.H..... UOC:XBB	1
3	PAOZZ	5340014195190	6W728	4668570	BRACKET,MOUNTING R.H..... UOC:XBB	1
4	PAOZZ	5305014750608	6W728	4397015-109	SCREW,CAP,SOCKET HE .313-18 X 1.25. UOC:XBB	4
5	PAOZZ	5305014206637	6W728	4397000-034	SCREW,CAP,HEXAGON H .313-18 X 1.00. UOC:XBB	6

END OF FIGURE

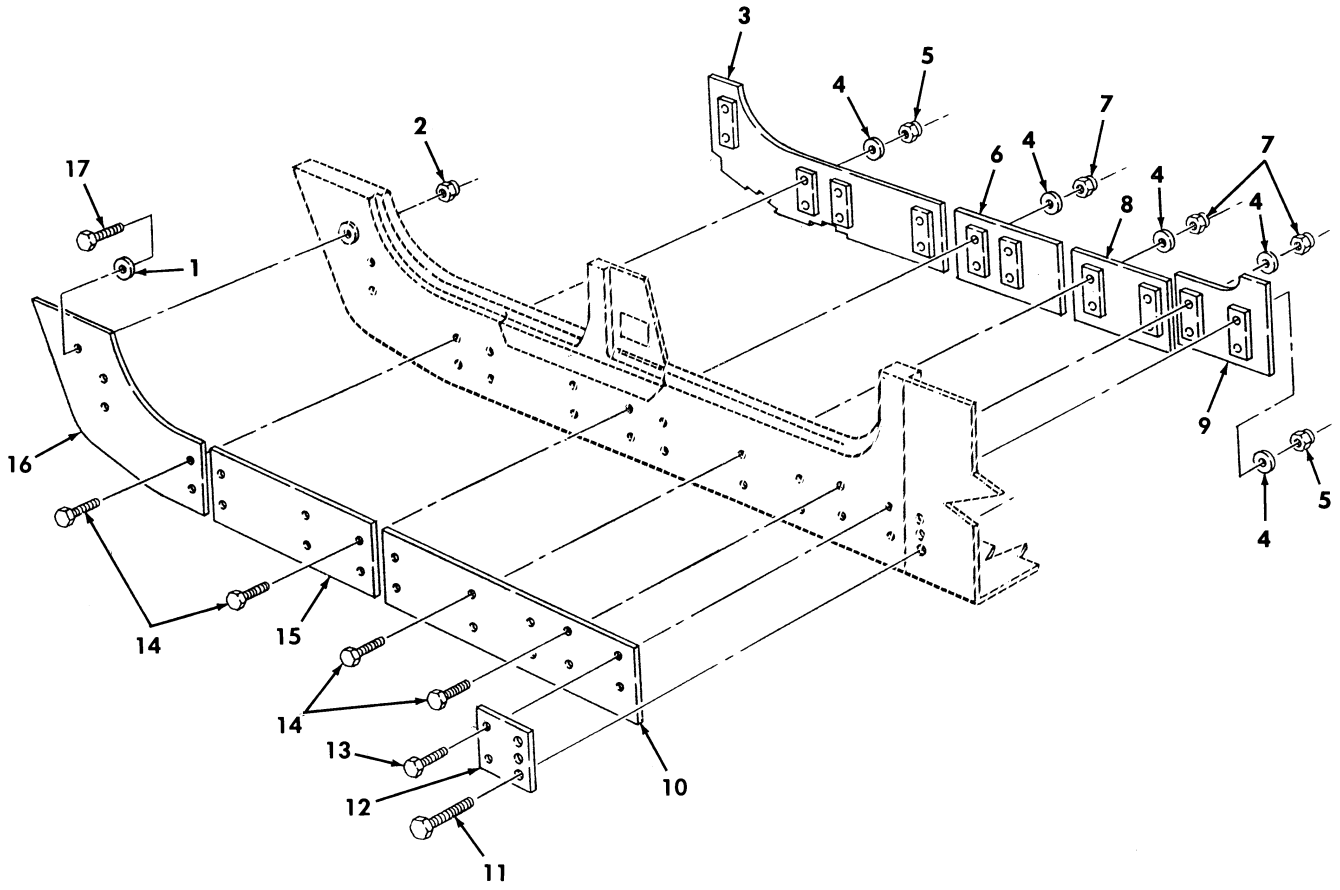

Figure 188. Passenger Side Rocker Panel Armor and Mounting Hardware.

(1) ITEM NO	(2) SMR CODE	(3) NSN	(4) CAGEC	(5) PART NUMBER	(6) DESCRIPTION AND USABLE ON CODES(UOC)	(7) QTY
					GROUP 1801 BODY,CAB,HOOD,AND HULL ASSEMBLY	
					FIG. 188 PASSENGER SIDE ROCKER PANEL ARMOR AND MOUNTING HARDWARE	
1	PAOZZ	5310014398181	6W728	4397083-001	WASHER,FLAT .387..... UOC:XBB	1
2	PAOZZ	5325013942414	78276	ALS7-420-165	INSERT,SCREW THREAD .250-20..... UOC:XBB	1
* 3	XDOZZ		6W728	4660458	LINER,ROCKER RIGHT,REAR..... UOC:XBB	1
4	PAOZZ	5310014357784	6W728	4397005-010	WASHER,FLAT .281..... UOC:XBB	20
5	PAOZZ	5310014398173	6W728	4397064-001	NUT,SELF-LOCKING,HE .250-20..... UOC:XBB	10
* 6	XDOZZ		6W728	4660461	LINER,ROCKER RIGHT,REAR..... UOC:XBB	1
7	PAOZZ	5310014398177	6W728	4397064-005	NUT,SELF-LOCKING,HE .375-16..... UOC:XBB	10
* 8	XDOZZ		6W728	4660460	LINER,ROCKER RIGHT,FRONT..... UOC:XBB	1
* 9	XDOZZ		6W728	4660454	LINER,ROCKER RIGHT,FRONT..... UOC:XBB	1
10	PBOZZ	2540014351061	6W728	4660420	ARMOR,SUPPLEMENTAL FRONT,RIGHT..... UOC:XBB	1
* 11	PAOZZ	5305009908632	80204	B1821BH038C375N	SCREW,CAP HEXAGON H .375-16 X 3.75. UOC:XBB	3
12	PAOZZ	5340014364352	6W728	4660870	PLATE,MOUNTING..... UOC:XBB	1
13	PAOZZ	5306014339187	6W728	4397000-015	BOLT,MACHINE .250-20 X 2.25..... UOC:XBB	2
* 14	PAOZZ	5305000712511	80204	B1821BH025C200N	SCREW,CAP HEXAGON H .250-20 X 2.00. UOC:XBB	18
15	PBOZZ	2540014350455	6W728	4660422	ARMOR,SUPPLEMENTAL CENTER,RIGHT.... UOC:XBB	1
16	PBOZZ	2540014350573	6W728	4660424	ARMOR,SUPPLEMENTAL RIGHT,REAR..... UOC:XBB	1
* 17	PAOZZ	5305002253843	80204	B1821BH025C100N	SCREW,CAP HEXAGON H .250-20 X 1.00. UOC:XBB	1

END OF FIGURE

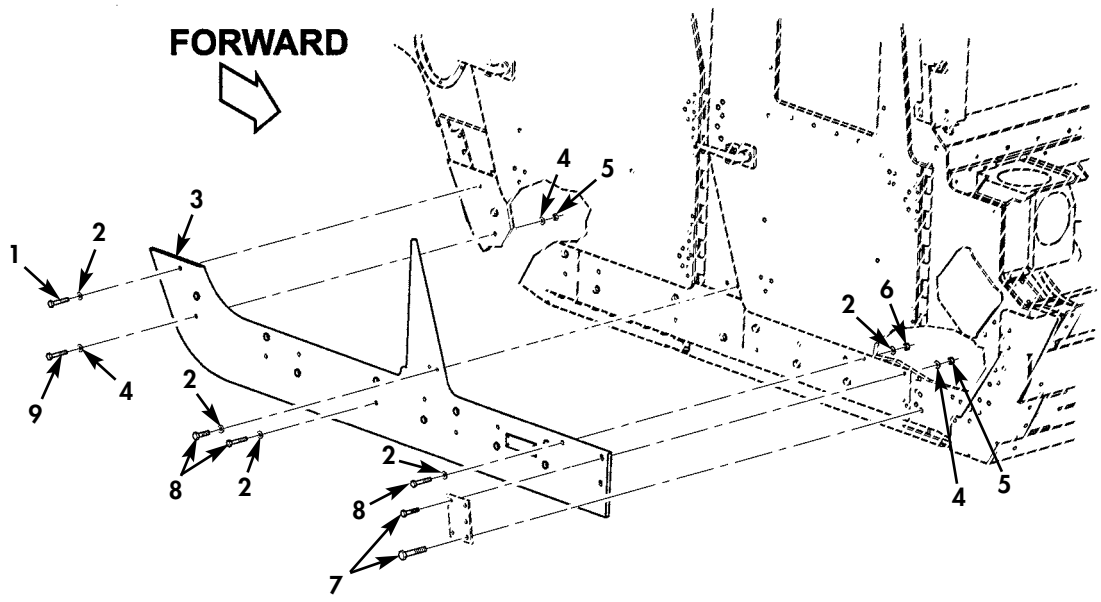

✱ QUANTITY SHOWN
REFLECTS ONE SIDE

Figure 188A. Frag 1 Kit, Right-Hand Rocker Panel Overlay and Mounting Hardware.

(1) ITEM NO	(2) SMR CODE	(3) NSN	(4) CAGEC	(5) PART NUMBER	(6) DESCRIPTION AND USABLE ON CODES(UOC)	(7) QTY
					GROUP 1801 BODY,CAB,HOOD,AND HULL ASSEMBLY	
					FIG. 188A FRAG 1 KIT,RIGHT-HAND ROCKER PANEL OVERLAY AND MOUNTING HARDWARE	
* 1	PAOZZ	5306014339185	6W728	4397000-013	BOLT,MACHINE 1/4-20 X 1.75..... UOC:XBB	1
* 2	PAOZZ	5310014357784	6W728	4397005-010	WASHER,FLAT 1/4..... UOC:XBB	11
* 3	PAOZZ	2540015425421	6W728	6432864-200M1	ARMOR,SUPPLEMENTAL..... UOC:XBB	1
* 4	PAOZZ	5310014192413	6W728	4397005-014	WASHER,FLAT 3/8..... UOC:XBB	11
* 5	PAOZZ	5310014398177	6W728	4397064-005	NUT,SELF-LOCKING,HE 3/8-16..... UOC:XBB	7
* 6	PAOZZ	5310014398173	6W728	4397064-001	NUT,SELF-LOCKING,HE 1/4-20..... UOC:XBB	5
* 7	PAOZZ	5305014750361	6W728	4397000-074	SCREW,CAP,HEXAGON H 3/8-16 X 4.00... UOC:XBB	3
* 8	PAOZZ	5306014339188	6W728	4397000-017	BOLT,MACHINE 1/4-20 X 2.75..... UOC:XBB	5
* 9	PAOZZ	5305015420550	6W728	4397000-069	SCREW,CAP,HEXAGON H 3/8-16 X 2.75... UOC:XBB	4

END OF FIGURE

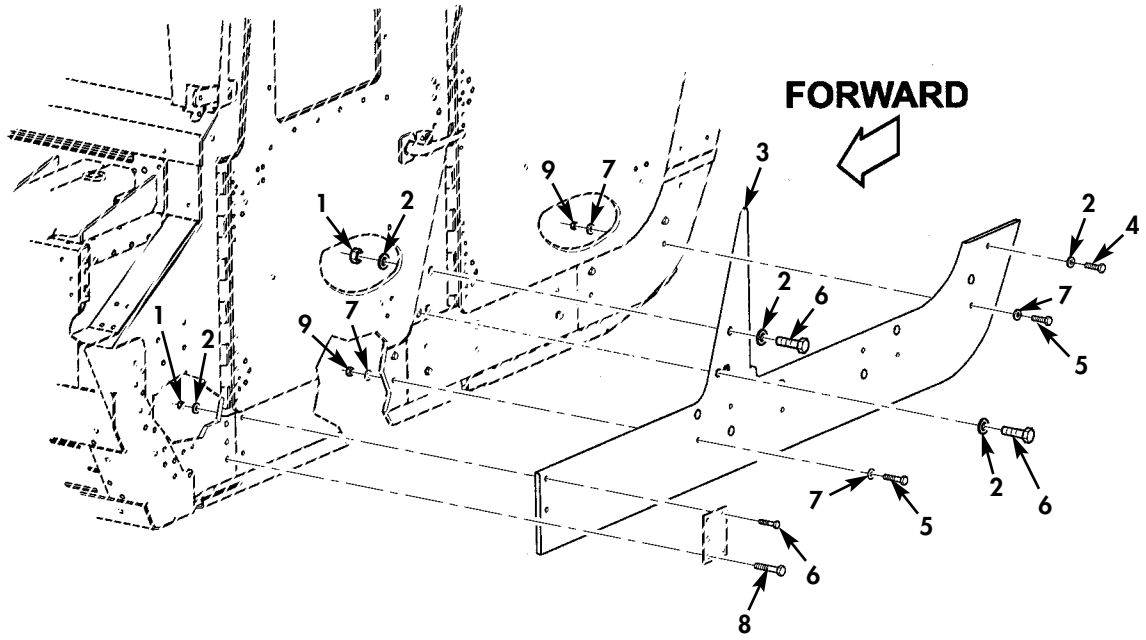

✱ QUANTITY SHOWN
REFLECTS ONE SIDE

Figure 188B. Frag 1 Kit, Left-Hand Rocker Panel Overlay and Mounting Hardware.

(1) ITEM NO	(2) SMR CODE	(3) NSN	(4) CAGEC	(5) PART NUMBER	(6) DESCRIPTION AND USABLE ON CODES(UOC)	(7) QTY
					GROUP 1801 BODY,CAB,HOOD,AND HULL ASSEMBLY	
					FIG. 188B FRAG 1 KIT,LEFT-HAND ROCKER PANEL OVERLAY AND MOUNTING HARDWARE	
* 1	PAOZZ	5310014398173	6W728	4397064-001	NUT,SELF-LOCKING,HE 1/4-20..... UOC:XBB	2
* 2	PAOZZ	5310014357784	6W728	4397005-010	WASHER,FLAT 1/4..... UOC:XBB	6
* 3	PAOZZ	2540015428249	6W728	6432865-200M1	ARMOR,SUPPLEMENTAL..... UOC:XBB	1
* 4	PAOZZ	5306014339185	6W728	4397000-013	BOLT,MACHINE 1/4-20 X 1.75..... UOC:XBB	1
* 5	PAOZZ	5305015420550	6W728	4397000-069	SCREW,CAP,HEXAGON H 3/8-16 X 2.75... UOC:XBB	4
* 6	PAOZZ	5306014339188	6W728	4397000-017	BOLT,MACHINE 1/4-20 X 2.75..... UOC:XBB	3
* 7	PAOZZ	5310014192413	6W728	4397005-014	WASHER,FLAT 3/8..... UOC:XBB	6
* 8	PAOZZ	5305014750361	6W728	4397000-074	SCREW,CAP,HEXAGON H 3/8-16 X 4.00... UOC:XBB	3
* 9	PAOZZ	5310014398177	6W728	4397064-005	NUT,SELF-LOCKING,HE 3/8-16..... UOC:XBB	4

END OF FIGURE

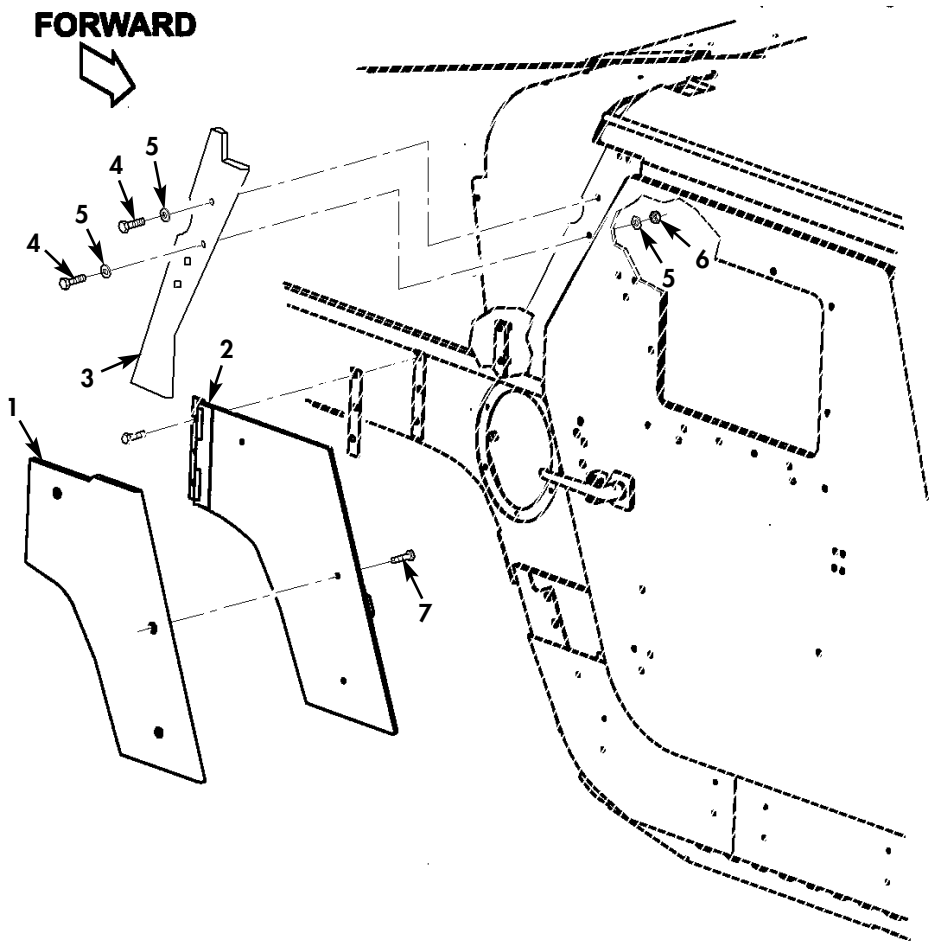

Figure 188C. Frag 1 Kit, Right-Hand Fuel Filler Access Cover, C-Pillar Overlay, and Mounting Hardware.

(1) ITEM NO	(2) SMR CODE	(3) NSN	(4) CAGEC	(5) PART NUMBER	(6) DESCRIPTION AND USABLE ON CODES(UOC)	(7) QTY
					GROUP 1801 BODY,CAB,HOOD,AND HULL ASSEMBLY	
					FIG. 188C FRAG 1 KIT,RIGHT HAND FUEL FILLER ACCESS COVER,C-PILLAR OVERLAY AND MOUNTING HARDWARE	
* 1	PAOZZ	2540015425996	6W728	6432894-200M1	ARMOR,SUPPLEMENTAL..... UOC:XBB	1
* 2	PAOZZ	2540015472665	6W728	6432924-200M1	ARMOR,SET SUPPLEMEN..... UOC:XBB	1
* 3	PAOZZ		6W728	6432911	ARMOR,SUPPLEMENTAL C-PILLAR,UPPER.. UOC:XBB	1
* 4	PAOZZ	5306014339186	6W728	4397000-014	BOLT,MACHINE 1/4-20 X 2.00..... UOC:XBB	2
* 5	PAOZZ	5310014357784	6W728	4397005-010	WASHER,FLAT 1/4..... UOC:XBB	4
* 6	PAOZZ	5310014398173	6W728	4397064-001	NUT,SELF-LOCKING,HE 1/4-20..... UOC:XBB	2
* 7	PAOZZ	5306014307399	6W728	4397000-006	BOLT,MACHINE 1/4-20 X 3/4..... UOC:XBB	3

END OF FIGURE

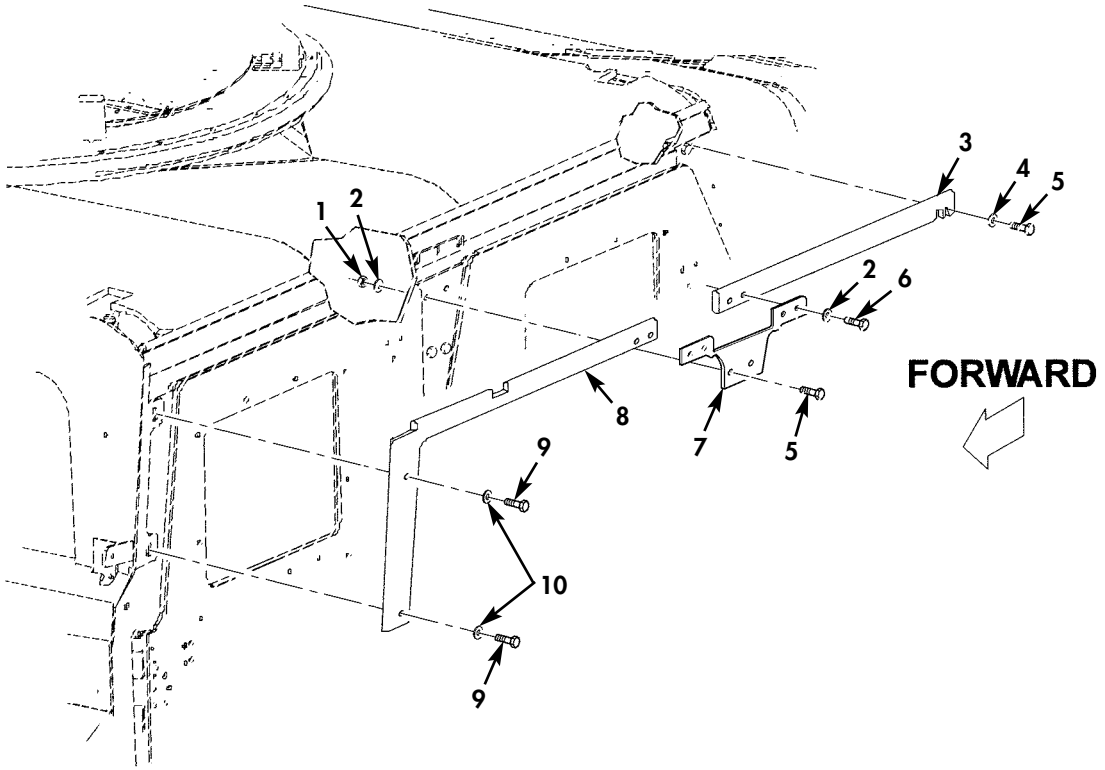

✱ QUANTITY SHOWN
REFLECTS ONE SIDE

Figure 188D. Frag 1 Kit, Door Header Overlays and Mounting Hardware.

(1) ITEM NO	(2) SMR CODE	(3) NSN	(4) CAGEC	(5) PART NUMBER	(6) DESCRIPTION AND USABLE ON CODES(UOC)	(7) QTY
					GROUP 1801 BODY,CAB,HOOD,AND HULL ASSEMBLY	
					FIG. 188D FRAG 1 KIT,DOOR HEADER OVERLAYS AND MOUNTING HARDWARE	
* 1	PAOZZ	5310014398173	6W728	4397064-001	NUT,SELF-LOCKING,HE 1/4-20..... UOC:XBB	2
* 2	PAOZZ	5310014229287	6W728	4397005-012	WASHER,FLAT 5/16..... UOC:XBB	6
* 3	PAOZZ	2540015425777	6W728	6432875-200M1	ARMOR,SUPPLEMENTAL L.H. OR R.H., REAR..... UOC:XBB	1
* 4	PAOZZ	5340014178995	6W728	4397005-011	WASHER,FLAT 1/4..... UOC:XBB	1
* 5	PAOZZ	5306014339185	6W728	4397000-013	BOLT,MACHINE 1/4-20 X 1.75..... UOC:XBB	3
* 6	PAOZZ	5305015304758	6W728	4397000-032	SCREW,CAP,HEXAGON H 5/16-18 X 3/4... UOC:XBB	4
* 7	PAOZZ	2540015426032	6W728	6432915-200M1	ARMOR,SUPPLEMENTAL L.H. OR R.H., CENTER..... UOC:XBB	1
* 8	PAOZZ	2540015425768	6W728	6432872-200M1	ARMOR,SUPPLEMENTAL L.H. OR R.H., FRONT..... UOC:XBB	1
* 9	PAOZZ	5306014339198	6W728	4397000-065	BOLT,MACHINE 3/8-16 X 1.75..... UOC:XBB	2
* 10	PAOZZ	5310014363742	6W728	4397005-015	WASHER,FLAT 3/8..... UOC:XBB	2

END OF FIGURE

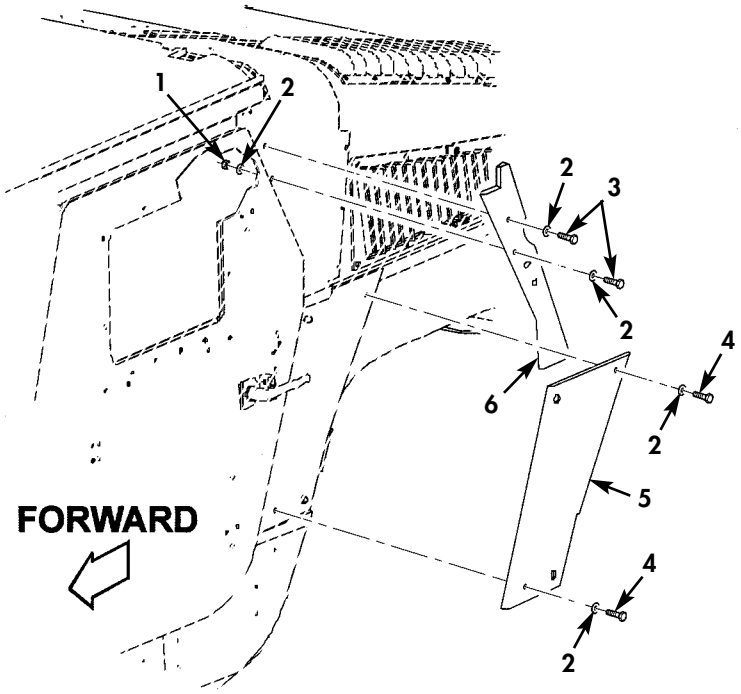

Figure 188E. Frag 1 Kit, Left-Hand C-Pillar Overlay and Mounting Hardware.

(1) ITEM NO	(2) SMR CODE	(3) NSN	(4) CAGEC	(5) PART NUMBER	(6) DESCRIPTION AND USABLE ON CODES(UOC)	(7) QTY
					GROUP 1801 BODY,CAB,HOOD,AND HULL ASSEMBLY	
					FIG. 188E FRAG 1 KIT,LEFT-HAND C-PILLAR OVERLAY AND MOUNTING HARDWARE	
* 1	PAOZZ	5310014398173	6W728	4397064-001	NUT,SELF-LOCKING,HE 1/4-20..... UOC:XBB	2
* 2	PAOZZ	5310014357784	6W728	4397005-010	WASHER,FLAT 1/4..... UOC:XBB	6
* 3	PAOZZ	5306014339186	6W728	4397000-014	BOLT,MACHINE 1/4-20 X 2.00..... UOC:XBB	2
* 4	PAOZZ	5306014339185	6W728	4397000-013	BOLT,MACHINE 1/4-20 X 1.75..... UOC:XBB	2
* 5	PAOZZ	2540015464279	6W728	6432889-200M1	ARMOR,SUPPLEMENTAL L.H.,LOWER..... UOC:XBB	1
* 6	PAOZZ	2540015464286	6W728	6432911-200M1	ARMOR,SUPPLEMENTAL C-PILLAR,UPPER.. UOC:XBB	1

END OF FIGURE

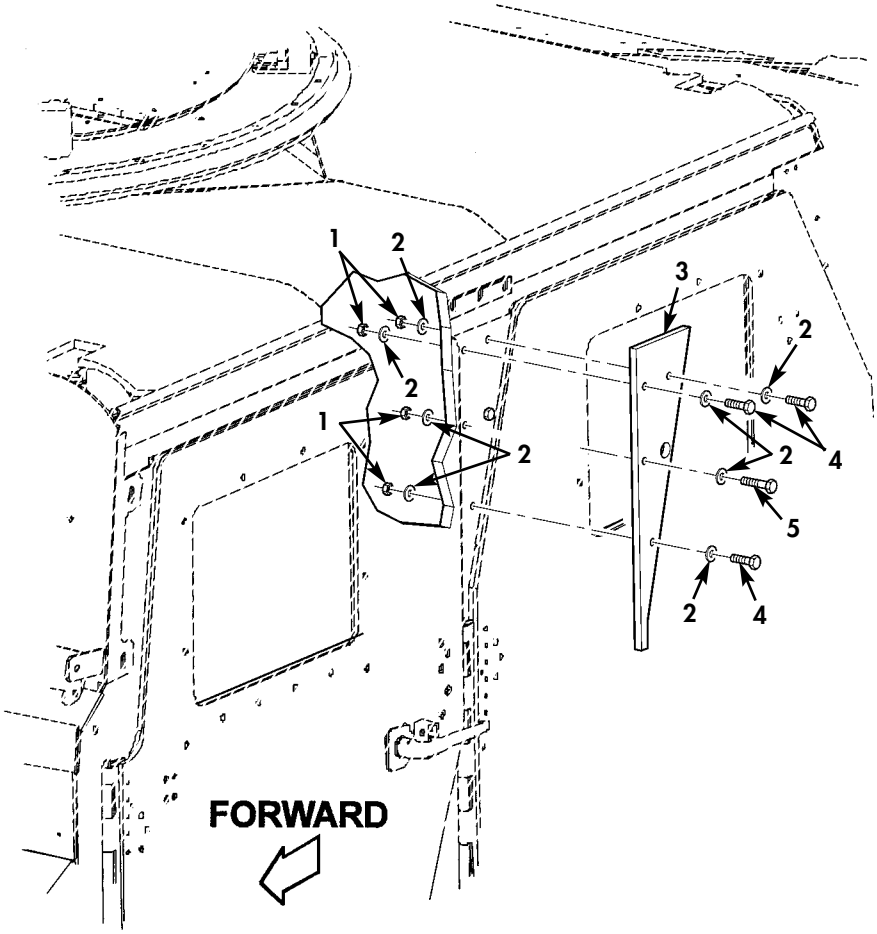

✱ QUANTITY SHOWN
REFLECTS ONE SIDE

Figure 188F. Frag 1 Kit, B-Pillar Overlay and Mounting Hardware.

(1) ITEM NO	(2) SMR CODE	(3) NSN	(4) CAGEC	(5) PART NUMBER	(6) DESCRIPTION AND USABLE ON CODES(UOC)	(7) QTY
					GROUP 1801 BODY,CAB,HOOD,AND HULL ASSEMBLY	
					FIG. 188F FRAG 1 KIT,B-PILLAR OVERLAY AND MOUNTING HARDWARE	
* 1	PAOZZ	5310014398172	6W728	4397064-003	NUT,SELF-LOCKING,HE 5/16-18..... UOC:XBB	4
* 2	PAOZZ	5310014229287	6W728	4397005-012	WASHER,FLAT 5/16..... UOC:XBB	8
* 3	PAOZZ	2540015424973	6W728	6432874-200M1	ARMOR,SUPPLEMENTAL B-PILLAR,L.H. OR R.H.,UPPER..... UOC:XBB	1
* 4	PAOZZ	5305015305159	6W728	4397000-041	SCREW,CAP,HEXAGON H 5/16-18 X 2.25.. UOC:XBB	3
* 5	PAOZZ	5305014282938	6W728	4397000-040	SCREW,MACHINE 5/16-18 X 2.00..... UOC:XBB	1

END OF FIGURE

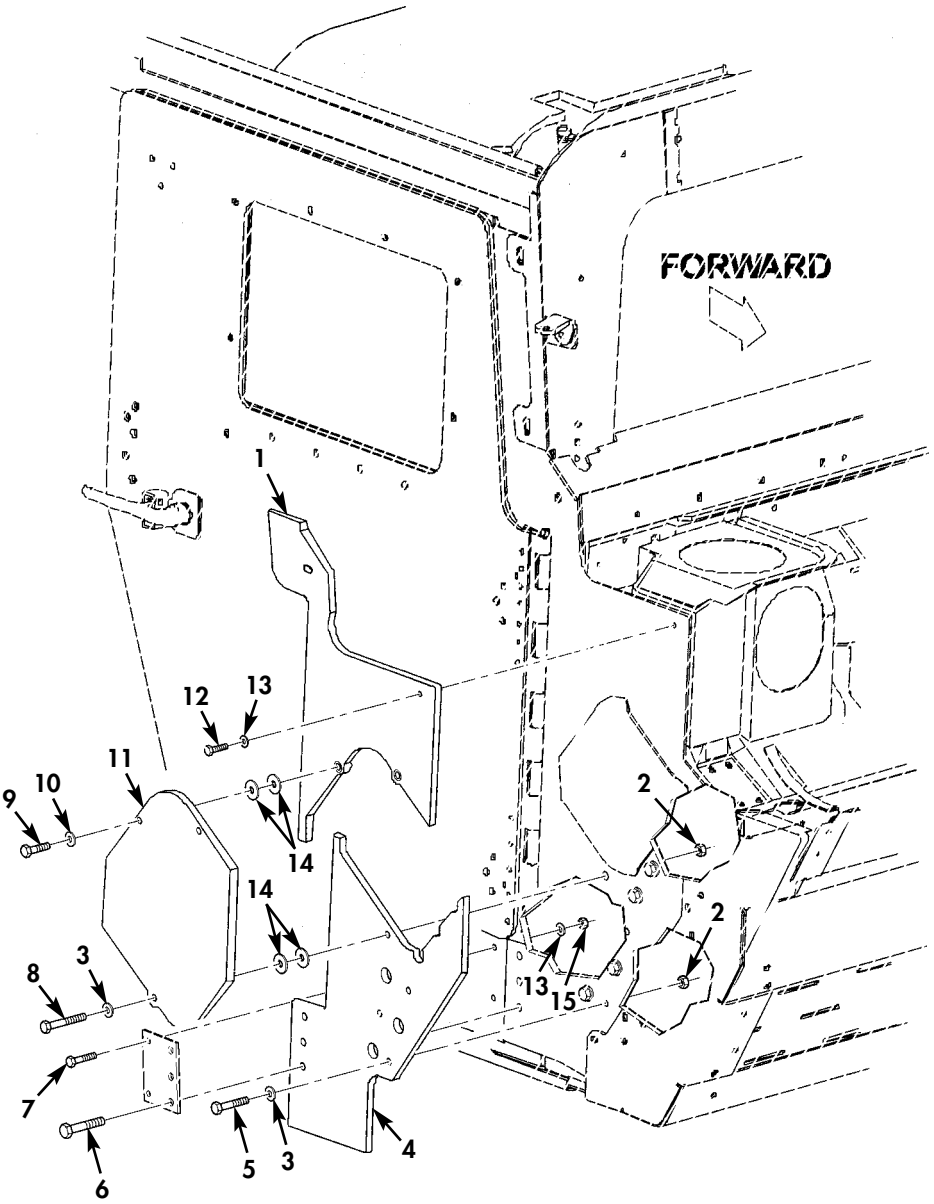

Figure 188G. Frag 1 Kit, Right-Hand A-Pillar Overlay and Mounting Hardware.

(1) ITEM NO	(2) SMR CODE	(3) NSN	(4) CAGEC	(5) PART NUMBER	(6) DESCRIPTION AND USABLE ON CODES(UOC)	(7) QTY
					GROUP 1801 BODY,CAB,HOOD,AND HULL ASSEMBLY	
					FIG. 188G FRAG 1 KIT,RIGHT-HAND A-PILLAR OVERLAY AND MOUNTING HARDWARE	
* 1	PAOZZ	2540015428219	6W728	6432868-200M1	ARMOR,SUPPLEMENTAL UPPER..... UOC:XBB	1
* 2	PAOZZ	5310014398177	6W728	4397064-005	NUT,SELF-LOCKING,HE 3/8-16..... UOC:XBB	4
* 3	PAOZZ	5310014192413	6W728	4397005-014	WASHER,FLAT 3/8..... UOC:XBB	4
* 4	PAOZZ	2540015425492	6W728	6432866-200M1	ARMOR,SUPPLEMENTAL LOWER..... UOC:XBB	1
* 5	PAOZZ	5306014485073	6W728	4397000-066	BOLT,MACHINE 3/8-16 X 2.00..... UOC:XBB	3
* 6	PAOZZ	5305002693249	80204	B1821BH038F375N	SCREW,CAP,HEXAGON H 3/8-24 X 3.75... UOC:XBB	3
* 7	PAOZZ	5306014339187	6W728	4397000-015	BOLT,MACHINE 1/4-20 X 2.25..... UOC:XBB	2
* 8	PAOZZ	5305015420550	6W728	4397000-069	SCREW,CAP,HEXAGON H 3/8-16 X 2.75... UOC:XBB	1
* 9	PAOZZ	5306014339183	6W728	4397000-036	BOLT,MACHINE 5/16-18 X 1.25..... UOC:XBB	2
* 10	PAOZZ	5310014229287	6W728	4397005-012	WASHER,FLAT 5/16..... UOC:XBB	2
* 11	PAOZZ	2540015425533	6W728	6432869	ARMOR,SUPPLEMENTAL BREATHER COVER... UOC:XBB	1
* 12	PAOZZ	5306014206635	6W728	4397000-012	BOLT,MACHINE 1/4-20 X 1.50..... UOC:XBB	2
* 13	PAOZZ	5310014357784	6W728	4397005-010	WASHER,FLAT 1/4..... UOC:XBB	4
* 14	PAOZZ	5310014398181	6W728	4397083-001	WASHER,FLAT 3/8 X 1/8 THICK..... UOC:XBB	4
* 15	PAOZZ	5310014398173	6W728	4397064-001	NUT,SELF-LOCKING HE 1/4-20..... UOC:XBB	2
					END OF FIGURE	

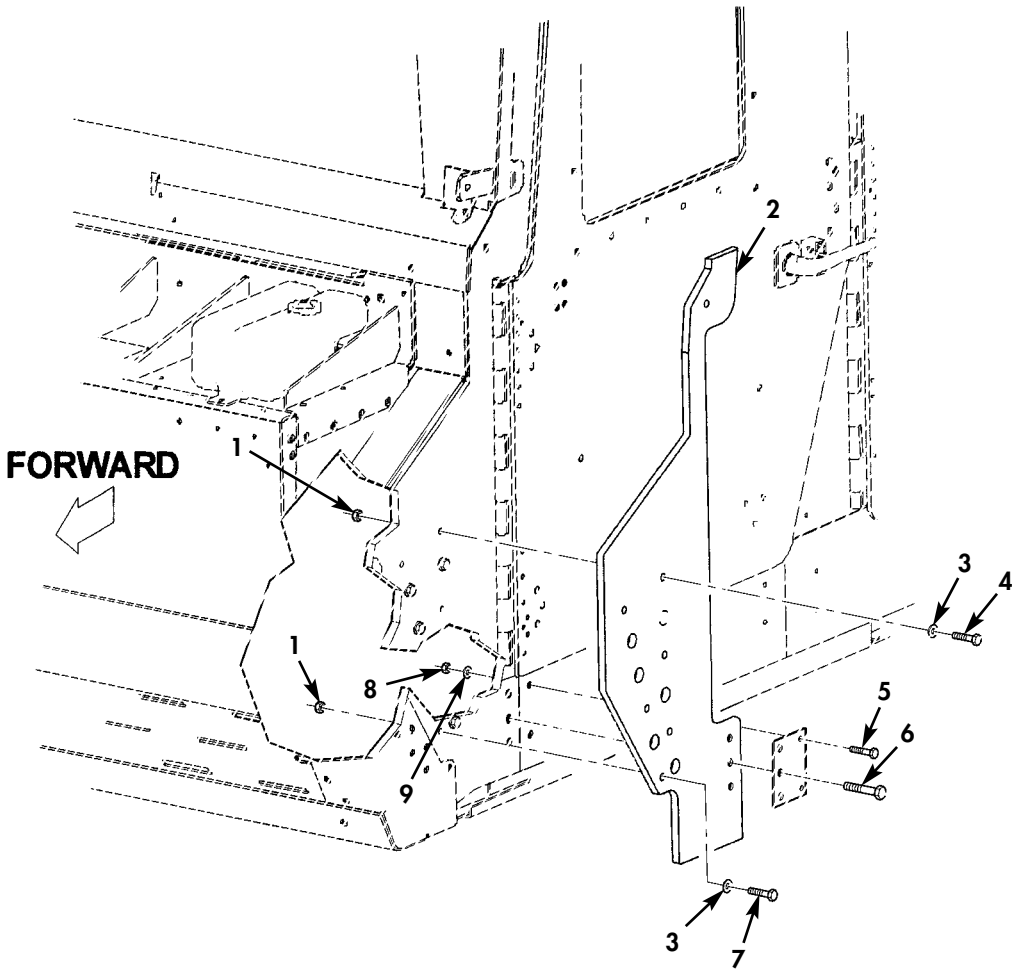

Figure 188H. Frag 1 Kit, Left-Hand A-Pillar Overlay and Related Hardware.

(1) ITEM NO	(2) SMR CODE	(3) NSN	(4) CAGEC	(5) PART NUMBER	(6) DESCRIPTION AND USABLE ON CODES(UOC)	(7) QTY
					GROUP 1801 BODY,CAB,HOOD,AND HULL ASSEMBLY	
					FIG. 188H FRAG 1 KIT,LEFT-HAND A-PILLAR OVERLAY AND RELATED HARDWARE	
* 1	PAOZZ	5310014398177	6W728	4397064-005	NUT,SELF-LOCKING,HE 3/8-16..... UOC:XBB	6
* 2	PAOZZ	2540015426059	6W728	6432867-200M1	ARMOR,SUPPLEMENTAL..... UOC:XBB	1
* 3	PAOZZ	5310014192413	6W728	4397005-014	WASHER,FLAT 3/8..... UOC:XBB	6
* 4	PAOZZ	5306014485073	6W728	4397000-066	BOLT,MACHINE 3/8-16 X 2.00..... UOC:XBB	5
* 5	PAOZZ	5306014339188	6W728	4397000-017	BOLT,MACHINE 1/4-20 X 2.75..... UOC:XBB	2
* 6	PAOZZ	5305014750361	6W728	4397000-074	SCREW,CAP,HEXAGON H 3/8-16 X 4.00... UOC:XBB	3
* 7	PAOZZ	5305014366376	6W728	4397000-067	SCREW,CAP,HEXAGON H 3/8-16 X 2.25... UOC:XBB	1
* 8	PAOZZ	5310014398173	6W728	4397064-001	NUT,SELF-LOCKING,HE 1/4-20..... UOC:XBB	2
* 9	PAOZZ	5310014357784	6W728	4397005-010	WASHER,FLAT 1/4..... UOC:XBB	2

END OF FIGURE

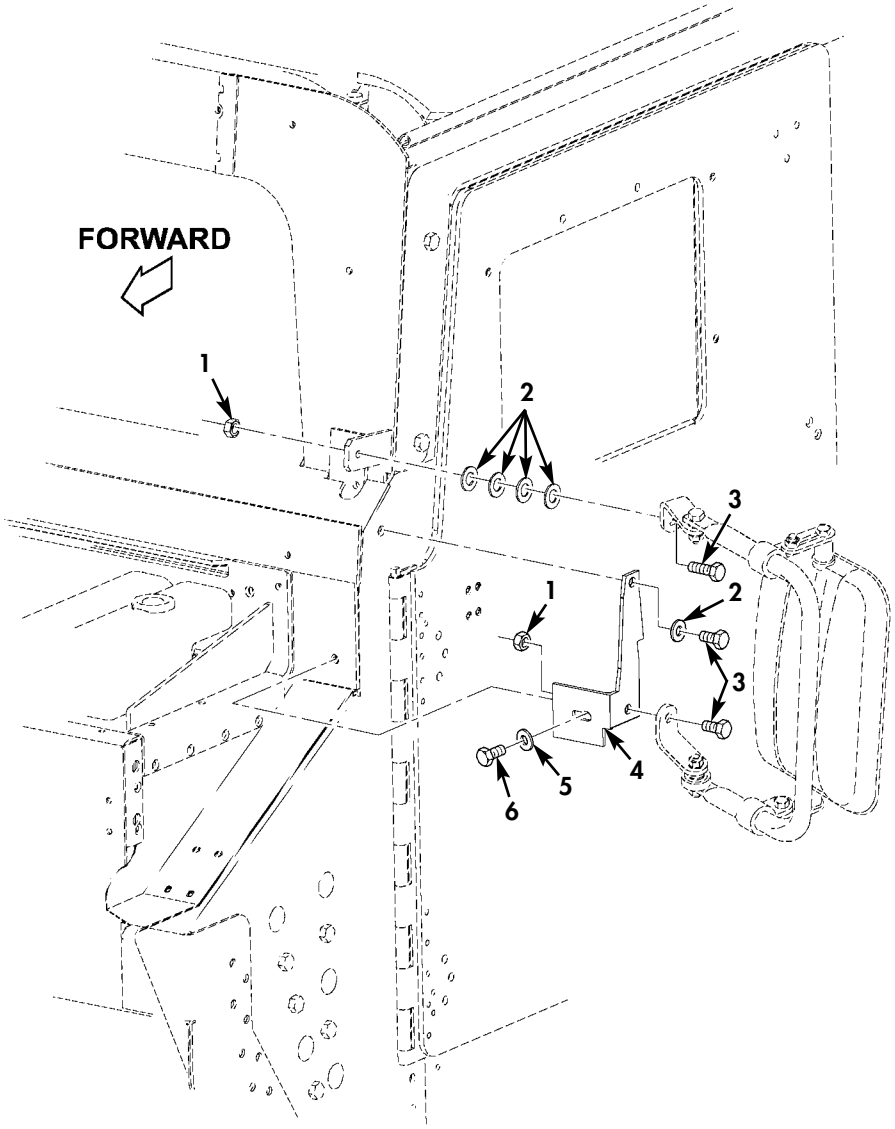

Figure 188I. Frag 1 Kit, Left-Hand Mirror Mounting Bracket and Related Parts.

(1) ITEM NO	(2) SMR CODE	(3) NSN	(4) CAGEC	(5) PART NUMBER	(6) DESCRIPTION AND USABLE ON CODES(UOC)	(7) QTY
					GROUP 1801 BODY,CAB,HOOD,AND HULL ASSEMBLY	
					FIG. 188I FRAG 1 KIT,LEFT-HAND MIRROR MOUNTING BRACKET AND RELATED PARTS	
* 1	PAOZZ	5310014398172	6W728	4397064-003	NUT,SELF-LOCKING,HE 5/16-18..... UOC:XBB	2
* 2	PAOZZ	5310014398181	6W728	4397083-001	WASHER,FLAT 3/8 X 1/8 THICK..... UOC:XBB	5
* 3	PAOZZ	5306014339213	6W728	4397000-038	BOLT,MACHINE 5/16-18 X 1.50..... UOC:XBB	3
* 4	PAOZZ	5340015420506	6W728	6433499-200M1	BRACKET,MOUNTING..... UOC:XBB	1
* 5	PAOZZ	5310014357784	6W728	4397005-010	WASHER,FLAT 1/4..... UOC:XBB	1
* 6	PAOZZ	5306014365392	6W728	4397000-010	BOLT,MACHINE 1/4-20 X 1.25..... UOC:XBB	1

END OF FIGURE

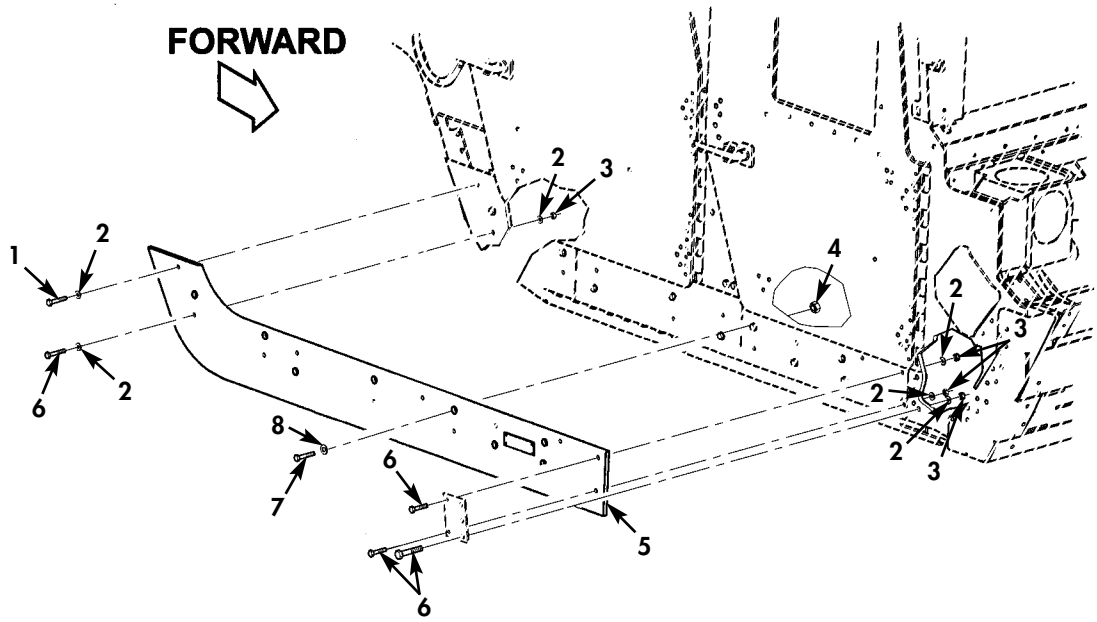

Figure 188J. Frag 1A Kit, Right-Hand Rocker Panel Overlay and Mounting Hardware.

(1) ITEM NO	(2) SMR CODE	(3) NSN	(4) CAGEC	(5) PART NUMBER	(6) DESCRIPTION AND USABLE ON CODES(UOC)	(7) QTY
					GROUP 1801 BODY,CAB,HOOD,AND HULL ASSEMBLY	
					FIG. 188J FRAG 1A KIT,RIGHT-HAND ROCKER PANEL OVERLAY AND MOUNTING HARDWARE	
* 1	PAOZZ	5305000712513	80204	B1821BH025C250N	SCREW,CAP,HEXAGON H 1/4-20 X 2.50... UOC:XBB	2
* 2	PAOZZ	5310014357784	6W728	4397005-010	WASHER,FLAT 1/4..... UOC:XBB	14
* 3	PAOZZ	5310014398173	6W728	4397064-001	NUT,SELF-LOCKING,HE 1/4-20..... UOC:XBB	10
* 4	PAOZZ	5310014373845	6W728	4397064-006	NUT,SELF-LOCKING,HE 3/8-24..... UOC:XBB	2
* 5	PAOZZ		6W728	6435007-200M1	ARMOR,SUPPLEMENTAL ROCKER PANEL..... UOC:XBB	1
* 6	PAOZZ	5305000712517	80204	B1821BH025C350N	SCREW,CAP,HEXAGON H 1/4-20 X 3.50... UOC:XBB	6
* 7	PAOZZ	5305002693248	80204	B1821BH038F350N	SCREW,CAP,HEXAGON H 3/8-24 X 3.50... UOC:XBB	2
* 8	PAOZZ	5310014192413	6W728	4397005-014	WASHER,FLAT 3/8..... UOC:XBB	2

END OF FIGURE

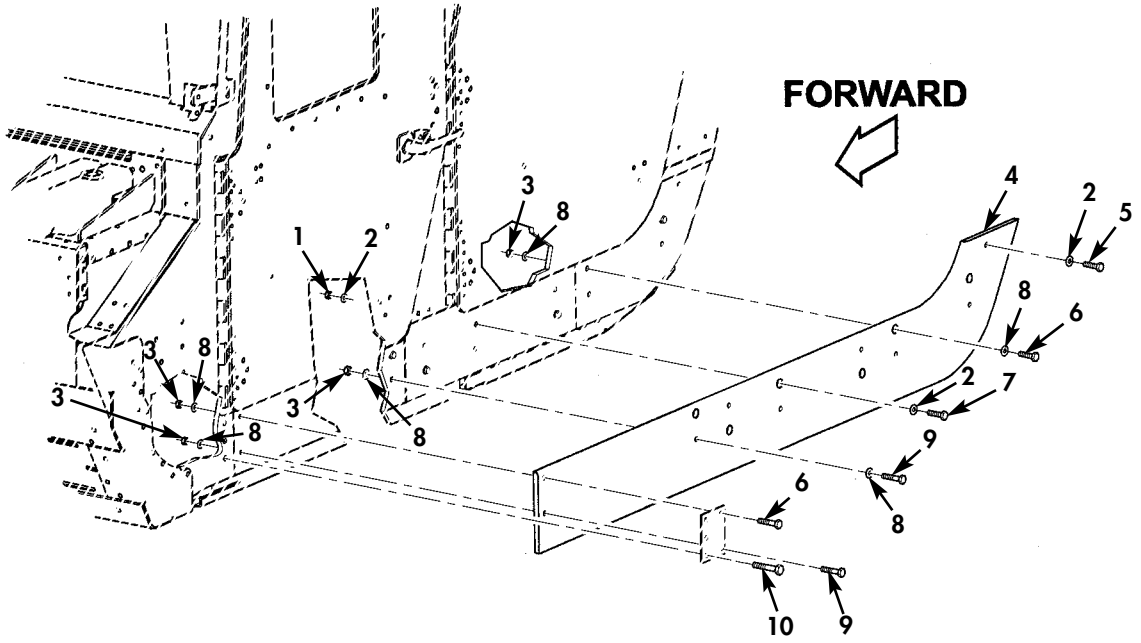

Figure 188K. Frag 1A Kit, Left-Hand Rocker Panel Overlay and Mounting Hardware.

(1) ITEM NO	(2) SMR CODE	(3) NSN	(4) CAGEC	(5) PART NUMBER	(6) DESCRIPTION AND USABLE ON CODES(UOC)	(7) QTY
					GROUP 1801 BODY,CAB,HOOD,AND HULL ASSEMBLY	
					FIG. 188K FRAG 1A KIT,LEFT-HAND ROCKER PANEL OVERLAY AND MOUNTING HARDWARE	
* 1	PAOZZ	5310014398173	6W728	4397064-001	NUT,SELF-LOCKING,HE 1/4-20..... UOC:XBB	3
* 2	PAOZZ	5310014357784	6W728	4397005-010	WASHER,FLAT 1/4..... UOC:XBB	7
* 3	PAOZZ	5310014373845	6W728	4397064-006	NUT,SELF-LOCKING,HE 3/8-24..... UOC:XBB	8
* 4	PAOZZ		6W728	6435008-200M1	ARMOR,SUPPLEMENTAL ROCKER PANEL..... UOC:XBB	1
* 5	PAOZZ	5305000712513	80204	B1821BH025C250N	SCREW,CAP,HEXAGON H 1/4-20 X 2.50... UOC:XBB	1
* 6	PAOZZ	5305002693249	80204	B1821BH038F375N	SCREW,CAP,HEXAGON H 3/8-24 X 3.75... UOC:XBB	2
* 7	PAOZZ	5305000712517	80204	B1821BH025C350N	SCREW,CAP,HEXAGON H 1/4-20 X 3.50... UOC:XBB	3
* 8	PAOZZ	5310014192413	6W728	4397005-014	WASHER,FLAT 3/8..... UOC:XBB	8
* 9	PAOZZ	5305002693248	80204	B1821BH038F350N	SCREW,CAP,HEXAGON H 3/8-24 X 3.50... UOC:XBB	3
* 10	PAOZZ	5305007813930	80204	B1821BH038C475N	SCREW,CAP,HEXAGON H 3/8-16 X 4.75... UOC:XBB	3

END OF FIGURE

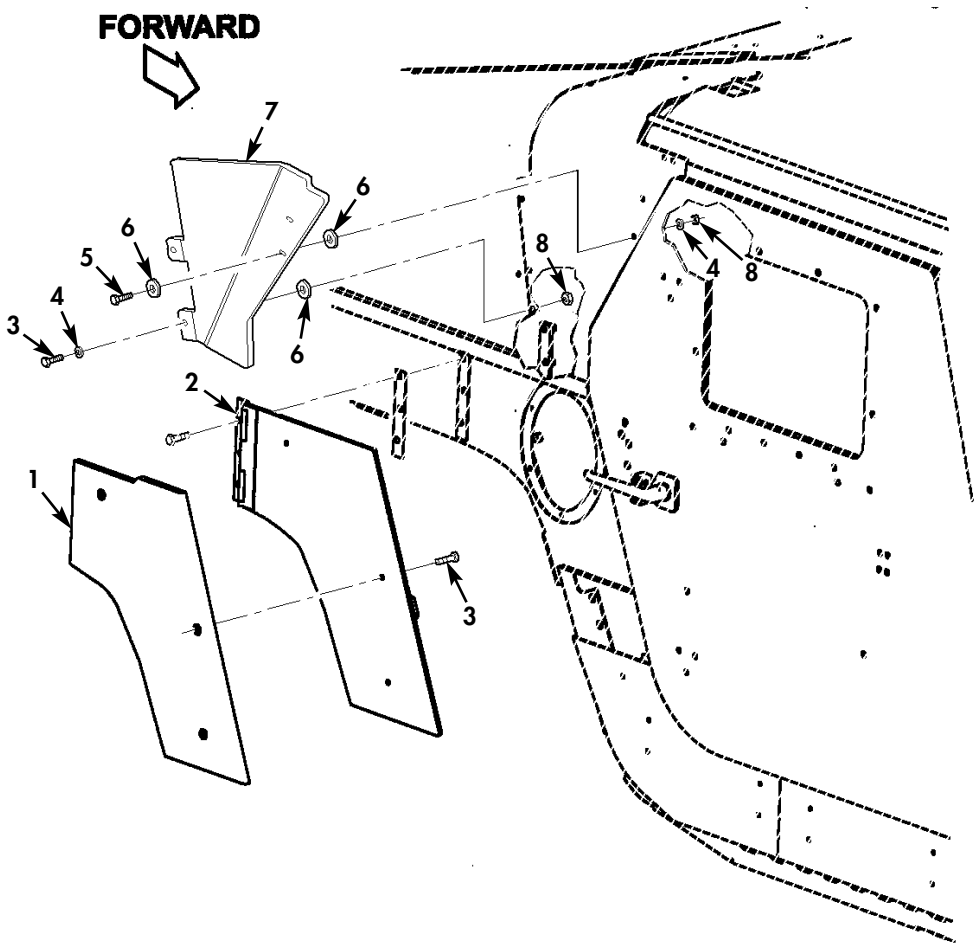

Figure 188L. Frag 1A Kit, Right-Hand Fuel Filler Access Cover, C-Pillar Overlay, and Mounting Hardware.

(1) ITEM NO	(2) SMR CODE	(3) NSN	(4) CAGEC	(5) PART NUMBER	(6) DESCRIPTION AND USABLE ON CODES(UOC)	(7) QTY
					GROUP 1801 BODY,CAB,HOOD,AND HULL ASSEMBLY	
					FIG. 188L FRAG 1A KIT,RIGHT HAND FUEL FILLER ACCESS COVER,C-PILLAR OVERLAY AND MOUNTING HARDWARE	
* 1	PAOZZ		6W728	6435016-200M1	ARMOR,SUPPLEMENTAL..... UOC:XBB	1
* 2	PFOZZ	2540014351058	6W728	4660412	ARMOR,SUPPLEMENTAL..... UOC:XBB	1
* 3	PAOZZ	5306014206635	6W728	4397000-012	BOLT,MACHINE 1/4-20 X 1.50..... UOC:XBB	5
* 4	PAOZZ	5340014178995	6W728	4397005-011	WASHER,FLAT 1/4..... UOC:XBB	4
* 5	PAOZZ	5306014339186	6W728	4397000-014	BOLT,MACHINE 1/4-20 X 2.00..... UOC:XBB	2
* 6	PAOZZ	5310014398181	6W728	4397083-001	WASHER,FLAT 3/8 X 1/8 THICK..... UOC:XBB	V
* 7	PAOZZ		6W728	6435223-200M1	ARMOR,SUPPLEMENTAL R.H.,UPPER..... UOC:XBB	1
* 8	PAOZZ	5310014398173	6W728	4397064-001	NUT,SELF-LOCKING,HE 1/4-20..... UOC:XBB	4

END OF FIGURE

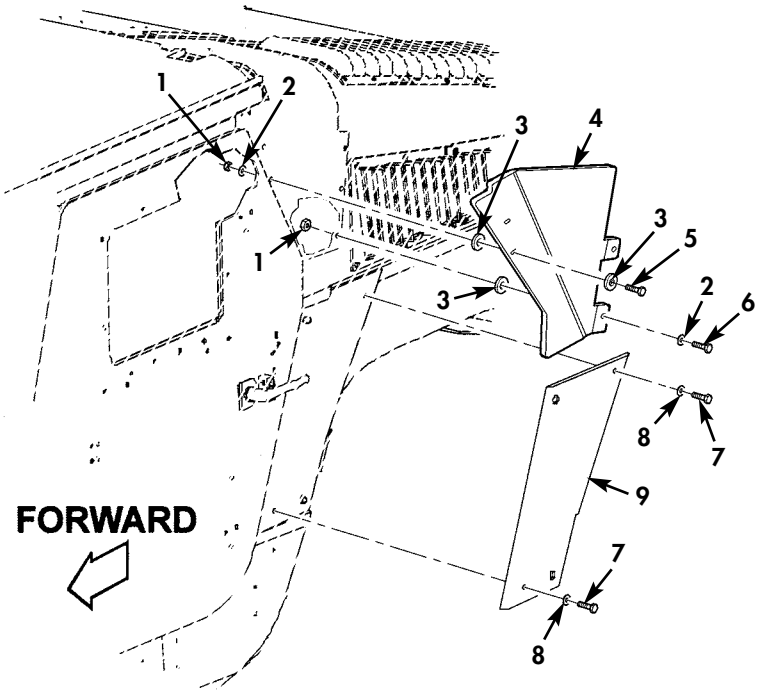

Figure 188M. Frag 1A Kit, Left-Hand C-Pillar Overlay and Mounting Hardware.

(1) ITEM NO	(2) SMR CODE	(3) NSN	(4) CAGEC	(5) PART NUMBER	(6) DESCRIPTION AND USABLE ON CODES(UOC)	(7) QTY
					GROUP 1801 BODY,CAB,HOOD,AND HULL ASSEMBLY	
					FIG. 188M FRAG 1A KIT,LEFT HAND C-PILLAR OVERLAY AND MOUNTING HARDWARE	
* 1	PAOZZ	5310014398173	6W728	4397064-001	NUT,SELF-LOCKING,HE 1/4-20..... UOC:XBB	4
* 2	PAOZZ	5340014178995	6W728	4397005-011	WASHER,FLAT 1/4..... UOC:XBB	6
* 3	PAOZZ	5310014398181	6W728	4397083-001	WASHER,FLAT 3/8 X 1/8 THICK..... UOC:XBB	V
* 4	PAOZZ		6W728	6435222-200M1	ARMOR,SUPPLEMENTAL L.H.,UPPER..... UOC:XBB	1
* 5	PAOZZ	5306014339186	6W728	4397000-014	BOLT,MACHINE 1/4-20 X 2.00..... UOC:XBB	2
* 6	PAOZZ	5306014206635	6W728	4397000-012	BOLT,MACHINE 1/4-20 X 1.50..... UOC:XBB	2
* 7	PAOZZ	5306014339187	6W728	4397000-015	BOLT,MACHINE 1/4-20 X 2.25..... UOC:XBB	4
* 8	PAOZZ	5310014357784	6W728	4397005-010	WASHER,FLAT 1/4..... UOC:XBB	4
* 9	PAOZZ		6W728	6435015-200M1	ARMOR,SUPPLEMENTAL C-PILLAR.L.H., LOWER..... UOC:XBB	1

END OF FIGURE

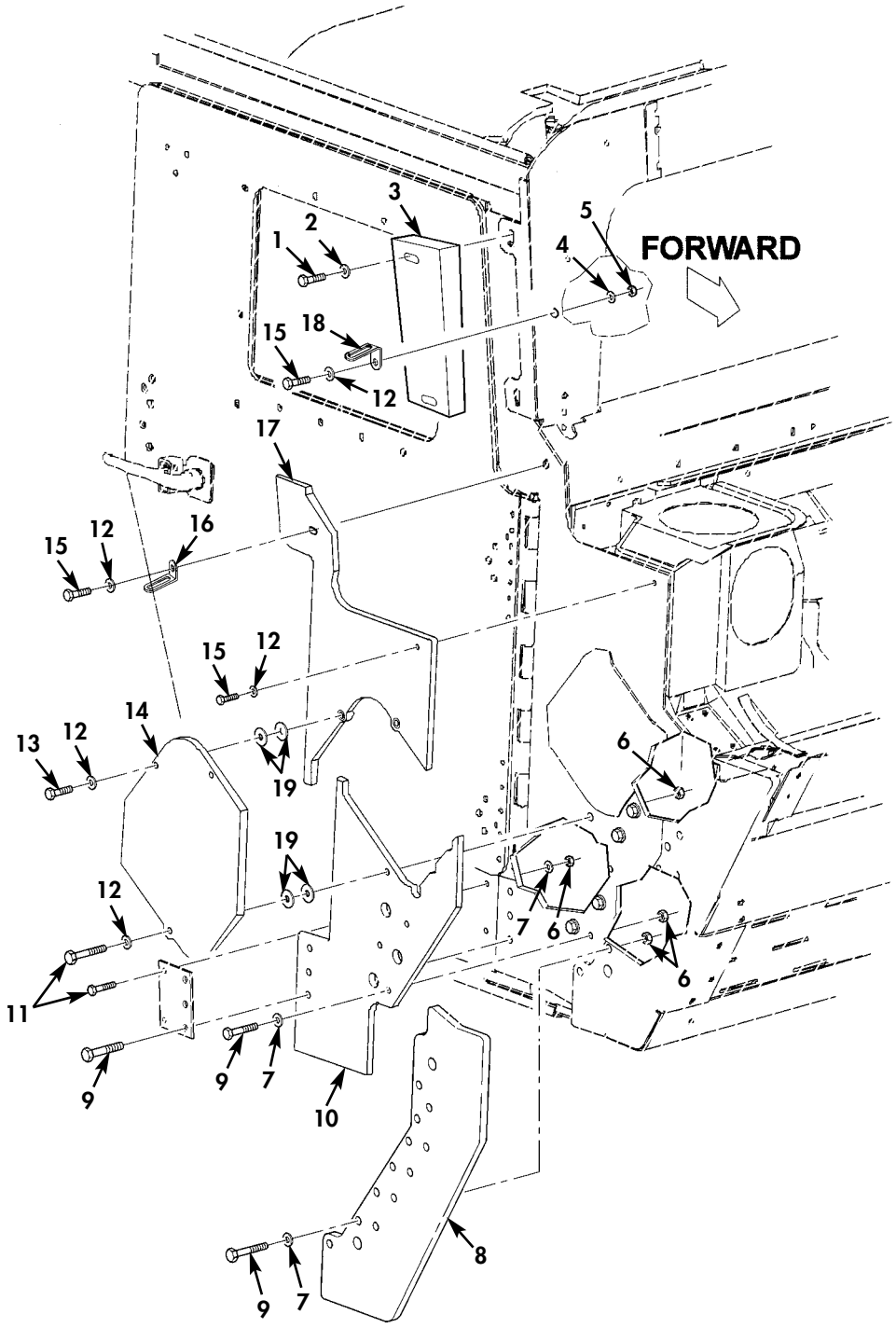

Figure 188N. Frag 1A Kit, Right-Hand A-Pillar Overlay and Mounting Hardware.

(1) ITEM NO	(2) SMR CODE	(3) NSN	(4) CAGEC	(5) PART NUMBER	(6) DESCRIPTION AND USABLE ON CODES(UOC)	(7) QTY
					GROUP 1801 BODY,CAB,HOOD,AND HULL ASSEMBLY	
					FIG. 188N FRAG 1A KIT,RIGHT-HAND A-PILLAR OVERLAY AND MOUNTING HARDWARE	
* 1	PAOZZ	5305014366375	6W728	4397000-068	SCREW,CAP,HEXAGON H 3/8-16 X 2.50... UOC:XBB	2
* 2	PAOZZ	5310014363742	6W728	4397005-015	WASHER,FLAT 3/8..... UOC:XBB	2
* 3	PAOZZ		6W728	6435017-200M1	ARMOR,SUPPLEMENTAL A-PILLAR,UPPER... UOC:XBB	1
* 4	PAOZZ	5310014229287	6W728	4397005-012	WASHER,FLAT 5/16..... UOC:XBB	1
* 5	PAOZZ	5310014398172	6W728	4397064-003	NUT,SELF-LOCKING,HE 5/16-18..... UOC:XBB	1
* 6	PAOZZ	5310014398177	6W728	4397064-005	NUT,SELF-LOCKING,HE 3/8-16..... UOC:XBB	16
* 7	PAOZZ	5310014192413	6W728	4397005-014	WASHER,FLAT 3/8..... UOC:XBB	15
* 8	PAOZZ		6W728	6435224-200M1	ARMOR,SUPPLEMENTAL..... UOC:XBB	1
* 9	PAOZZ	5305015420550	6W728	4397000-069	SCREW,CAP,HEXAGON H 3/8-16 X 2.75... UOC:XBB	17
* 10	PAOZZ		6W728	6435011-200M1	ARMOR,SUPPLEMENTAL A-PILLAR ,LOWER. UOC:XBB	1
* 11	PAOZZ	5305007813930	80204	B1821BH038C475N	SCREW,CAP,HEXAGON H 3/8-16 X 4.75... UOC:XBB	3
* 12	PAOZZ	5310014363741	6W728	4397005-013	WASHER,FLAT 5/16..... UOC:XBB	6
* 13	PAOZZ	5305014750404	6W728	4397000-072	SCREW,CAP,HEXAGON H 3/8-16 X 3.50... UOC:XBB	2
* 14	PAOZZ		6W728	6435013-200M1	ARMOR,SUPPLEMENTAL BREATHER COVER... UOC:XBB	1
* 15	PAOZZ	5305015305159	6W728	4397000-041	SCREW,CAP,HEXAGON H 5/16-18 X 2.25.. UOC:XBB	3
* 16	PAOZZ		6W728	6435019-200M1	BRACKET,ANGLE LOWER MIRROR MOUNT.... UOC:XBB	1
* 17	PAOZZ		6W728	6435012-200M1	ARMOR,SUPPLEMENTAL A-PILLAR,UPPER... UOC:XBB	1
* 18	PAOZZ		6W728	6435489-200M1	BRACKET,ANGLE UPPER MIRROR MOUNT.... UOC:XBB	1
* 19	PAOZZ	5310014398181	6W728	4397083-001	WASHER,FLAT 3/8 X 1/8 THICK..... UOC:XBB	4

END OF FIGURE

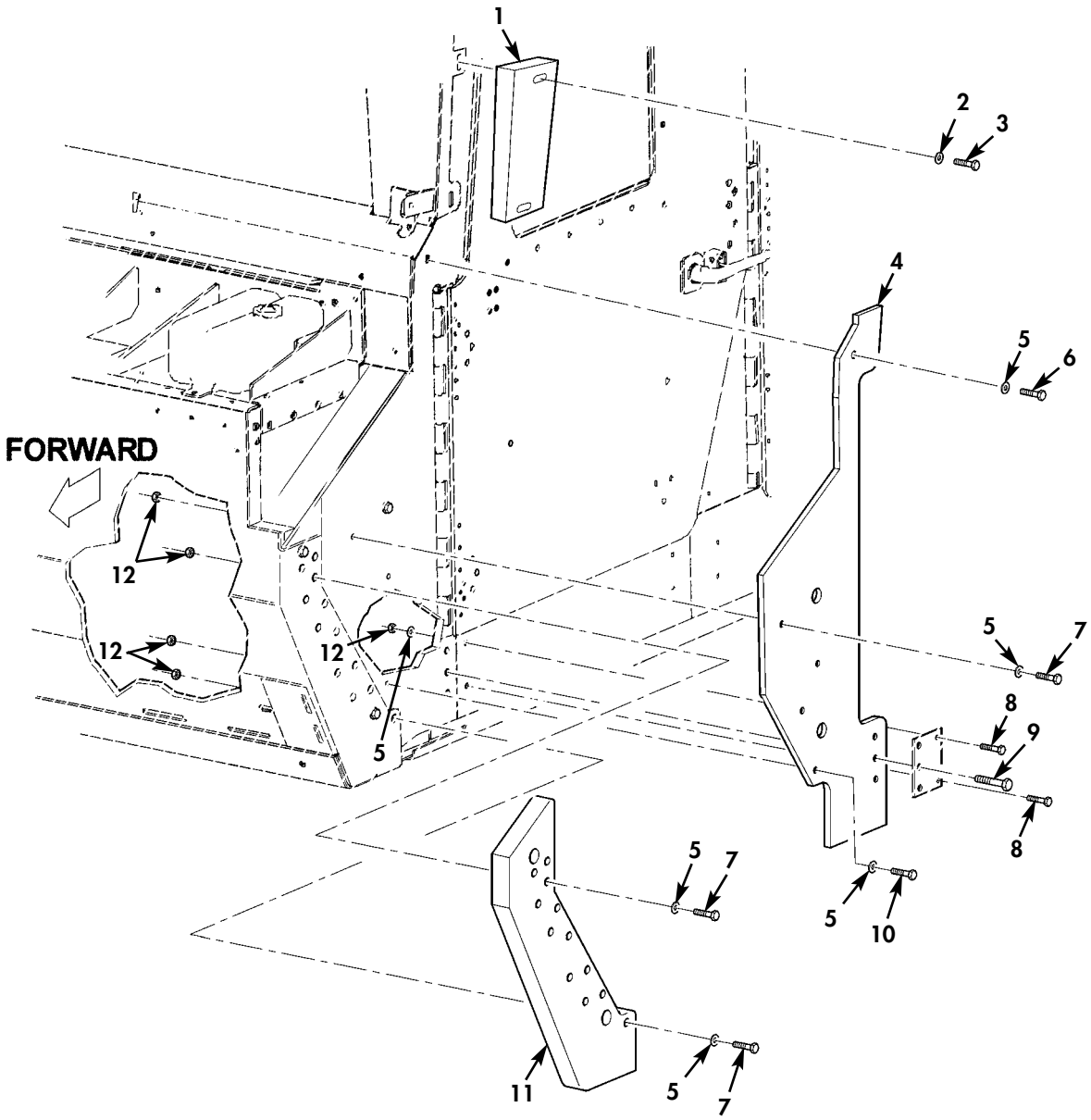

Figure 188O. Frag 1A Kit, Left-Hand A-Pillar Overlay and Related Hardware.

(1) ITEM NO	(2) SMR CODE	(3) NSN	(4) CAGEC	(5) PART NUMBER	(6) DESCRIPTION AND USABLE ON CODES(UOC)	(7) QTY
					GROUP 1801 BODY,CAB,HOOD,AND HULL ASSEMBLY	
					FIG. 188O FRAG 1A KIT,LEFT-HAND A-PILLAR OVERLAY AND RELATED HARDWARE	
* 1	PAOZZ		6W728	6435017-200M1	ARMOR,SUPPLEMENTAL UPPER..... UOC:XBB	1
* 2	PAOZZ	5310014363742	6W728	4397005-015	WASHER,FLAT 3/8..... UOC:XBB	2
* 3	PAOZZ	5305014366375	6W728	4397000-068	SCREW,CAP,HEXAGON H 3/8-16 X 2.50... UOC:XBB	2
* 4	PAOZZ		6W728	6435010-200M1	ARMOR,SUPPLEMENTAL IED OVERLAY..... UOC:XBB	1
* 5	PAOZZ	5310014363741	6W728	4397005-013	WASHER,FLAT 5/16..... UOC:XBB	20
* 6	PAOZZ	5305015305159	6W728	4397000-041	SCREW,CAP,HEXAGON H 5/16-18 X 2.25.. UOC:XBB	1
* 7	PAOZZ	5305015420550	6W728	4397000-069	SCREW,CAP,HEXAGON H 3/8-16 X 2.75... UOC:XBB	13
* 8	PAOZZ	5305007813930	80204	B1821BH038C475N	SCREW,CAP,HEXAGON H 3/8-16 X 4.75... UOC:XBB	12
* 9	PAOZZ	5305002693249	80204	B1821BH038F375N	SCREW,CAP,HEXAGON H 3/8-24 X 3.75... UOC:XBB	3
* 10	PAOZZ	5305008465703	80204	B1821BH038C300N	SCREW,CAP,HEXAGON H 3/8-16 X 3.00... UOC:XBB	1
* 11	PAOZZ		6W728	6435225-200M1	ARMOR,SUPPLEMENTAL IED OVERLAY..... UOC:XBB	1
* 12	PAOZZ	5310014398177	6W728	4397064-005	NUT,SELF-LOCKING,HE 3/8-16..... UOC:XBB	15

END OF FIGURE

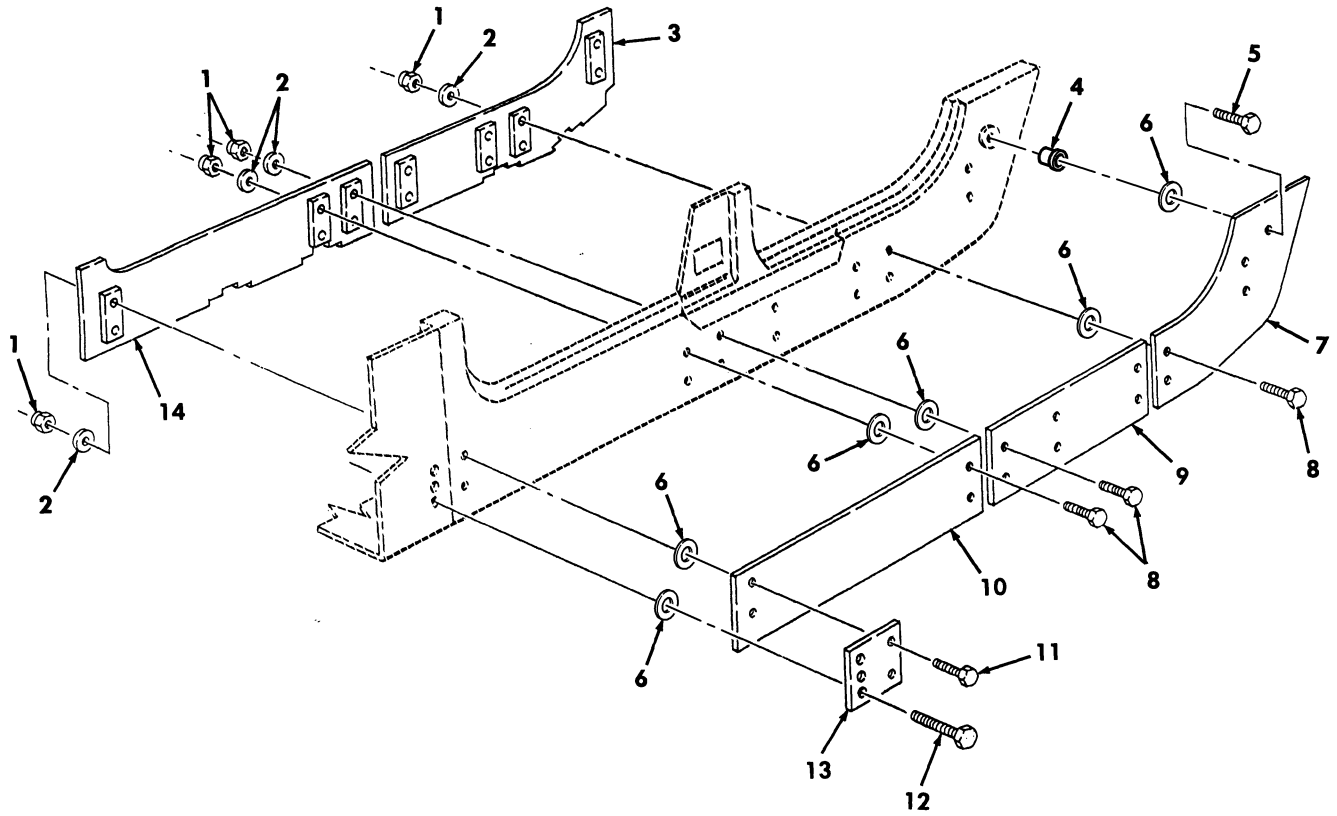

Figure 189. Driver Side Rocker Panel Armor and Mounting Hardware.

(1) ITEM NO	(2) SMR CODE	(3) NSN	(4) CAGEC	(5) PART NUMBER	(6) DESCRIPTION AND USABLE ON CODES(UOC)	(7) QTY
					GROUP 1801 BODY,CAB,HOOD,AND HULL ASSEMBLY	
					FIG. 189 DRIVER SIDE ROCKER PANEL ARMOR AND MOUNTING HARDWARE	
1	PAOZZ	5310014398173	6W728	4397064-001	NUT,SELF-LOCKING,HE .250-20..... UOC:XBB	14
2	PAOZZ	5310014357784	6W728	4397005-010	WASHER,FLAT .281..... UOC:XBB	14
* 3	PAOZZ	2540015433219	6W728	4660459-002	ARMOR,SUPPLEMENTAL REAR,LEFT..... UOC:XBB	1
4	PAOZZ	5325013942414	78276	ALS7-420-165	INSERT,SCREW THREAD .250-20..... UOC:XBB	1
5	PAOZZ	5305002253843	80204	B1821BH025C100N	SCREW,CAP HEXAGON H .250-20 X 1.00. UOC:XBB	1
6	PAOZZ	5310014398181	6W728	4397083-001	WASHER,FLAT .387..... UOC:XBB	15
7	PBOZZ	2540014350981	6W728	4660423	ARMOR,SUPPLEMENTAL REAR,LEFT..... UOC:XBB	1
8	PAOZZ	5305000712511	80204	B1821BH025C200N	SCREW,CAP HEXAGON H .250-20 X 2.00. UOC:XBB	12
9	PBOZZ	2540014357211	6W728	4660443	ARMOR,SUPPLEMENTAL CENTER,LEFT..... UOC:XBB	1
10	PBOZZ	2540014350570	6W728	4660421	ARMOR,SUPPLEMENTAL FRONT,LEFT..... UOC:XBB	1
11	PAOZZ	5306014339187	6W728	4397000-015	BOLT,MACHINE .250-20 X 2.25..... UOC:XBB	2
12	PAOZZ	5305014750798	6W728	4397010-013	SCREW,CAP,HEXAGON H .375-16 X 3.75. UOC:XBB	3
13	PAOZZ	5340014364352	6W728	4660870	PLATE,MOUNTING..... UOC:XBB	1
* 14	PAOZZ	2540015429650	6W728	4660455-002	LINER,ROCKER FRONT,LEFT..... UOC:XBB	1

END OF FIGURE

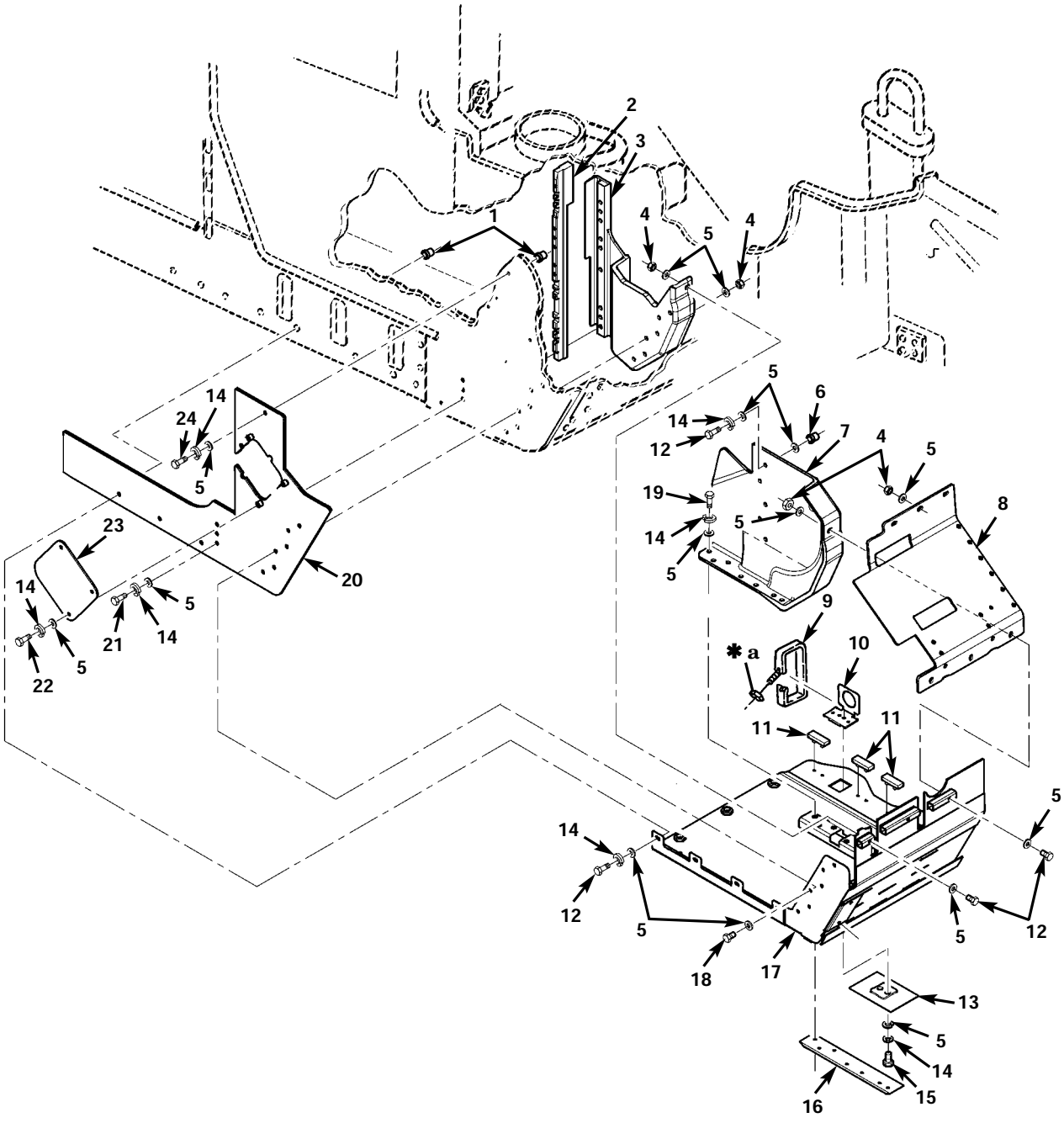

✱**a** PART OF ITEM 9

Figure 189A. Right Front Underbody Armor (Serial Number 241953 and Below).

(1) ITEM NO	(2) SMR CODE	(3) NSN	(4) CAGEC	(5) PART NUMBER	(6) DESCRIPTION AND USABLE ON CODES(UOC)	(7) QTY
					GROUP 1801 BODY,CAB,HOOD,AND HULL ASSEMBLY	
					FIG. 189A RIGHT FRONT UNDERBODY ARMOR(SERIAL NUMBER 241953 AND BELOW)	
* 1	PAOZZ	5325014704625	34623	6001247	INSERT,SCREW THREAD 3/8-16..... UOC:TTA,UUA,UU2	1
* 2	PAOZZ	9515015442303	6W728	6432288-200M1	REINFORCEMENT "A" PILLAR,TAN..... UOC:TTA,UUA,UU2	1
* 3	PAOZZ	9515015442282	6W728	6432285-200M1	CASTING,KICKPANEL OUTER,R.H.,TAN... UOC:TTA,UUA,UU2	1
* 4	PAOZZ	5310009359021	96906	MS51943-35	NUT,SELF-LOCKING 3/8-16..... UOC:TTA,UUA,UU2	9
* 5	PAOZZ	5310014124013	24617	2436163	WASHER,FLAT 3/8..... UOC:TTA,UUA,UU2	48
* 6	PAOZZ	5325014088466	78276	AKS4-420-165	INSERT,SCREW THREAD 3/8-16..... UOC:TTA,UUA,UU2	4
* 7	PAOZZ	9515015442299	6W728	6432287-200M1	CASTING,KICKPANEL INNER,R.H.,TAN... UOC:TTA,UUA,UU2	1
* 8	PAOZZ	2540015383523	6W728	6432362-200M1	LINER,COWL UPPER,TAN..... UOC:TTA,UUA,UU2	1
* 9	PAOZZ	5340014563917	14242	ST1536	BAND,RETAINING..... UOC:TTA,UUA,UU2	4
* 10	PAOZZ	5340015360557	6W728	4660639	BRACKET,MOUNTING..... UOC:TTA,UUA,UU2	2
* 11	PAOZZ	5340015357729	6W728	6432550-200M1	BUMPER,NONMETALLIC TAN..... UOC:TTA,UUA,UU2	4
* 12	PAOZZ	5305007252317	80204	B1821BH038C150N	SCREW,CAP,HEXAGON H 3/8-16 X 1.50.. UOC:TTA,UUA,UU2	11
* 13	PAOZZ	5340015603953	6W728	6432495-01M1	PLATE,RETAINER UNDERBODY,TAN..... UOC:TTA,UUA,UU2	2
* 14	PAOZZ	5310013344710	80205	MS35338-46	WASHER,LOCK 3/8..... UOC:TTA,UUA,UU2	26
* 15	PAOZZ	5305002693238	80204	B1821BH038F125N	SCREW,CAP,HEXAGON H 3/8-24 X 1.25.. UOC:TTA,UUA,UU2	4
* 16	PAOZZ	9515015442269	6W728	6430680-200M1	RETAINER,KICKPANEL R.H.,TAN..... UOC:TTA,UUA,UU2	1
* 17	PAOZZ	5340015364269	6W728	6432702-200M1	PLATE,MOUNTING R.H.,FRONT,TAN..... UOC:TTA,UUA,UU2	1
* 18	PAOZZ	5305007829489	80204	B1821BH038C200N	SCREW,CAP,HEXAGON H 3/8-16 X 2.00.. UOC:TTA,UUA,UU2	6
* 19	PAOZZ	5305008465703	80204	B1821BH038C300N	SCREW,CAP,HEXAGON H 3/8-16 X 3.00.. UOC:TTA,UUA,UU2	7
* 20	PAOZZ	2540015383550	6W728	6432650-200M1	"A" PILLAR,LOWER R.H.,TAN..... UOC:TTA,UUA,UU2	1
* 21	PAOZZ	5305007813928	80204	B1821BH038C400N	SCREW,CAP,HEXAGON H 3/8-16 X 4.00.. UOC:TTA,UUA,UU2	3
* 22	PAOZZ	5305000680510	05047	B1821BH038C100N	SCREW,CAP,HEXAGON H 3/8-16 X 1.00.. UOC:TTA,UUA,UU2	3

(1) ITEM NO	(2) SMR CODE	(3) NSN	(4) CAGEC	(5) PART NUMBER	(6) DESCRIPTION AND USABLE ON CODES(UOC)	(7) QTY
* 23	PAOZZ	2540015417309	6W728	6432630-200M1	SUBASSEMBLY,VENT CO TAN..... UOC:TTA,UUA,UU2	1
* 24	PAOZZ	5305000680511	80204	B1821BH038C125N	SCREW,CAP,HEXAGON H 3/8-16 X 1.25.. UOC:TTA,UUA,UU2	1

END OF FIGURE

UNIT, DIRECT SUPPORT, AND GENERAL SUPPORT MAINTENANCE
REPAIR PARTS AND SPECIAL TOOLS LIST

TRUCK, UTILITY: S250 SHELTER CARRIER, 4X4, M1113 (2320-01-412-0143),
TRUCK, UTILITY: UP-ARMORED CARRIER, 4X4, M1114 (2320-01-413-3739),
TRUCK, UTILITY: EXPANDED CAPACITY, ARMAMENT CARRIER, 4X4, M1151 (2320-01-518-7330),
TRUCK, UTILITY: EXPANDED CAPACITY, ENHANCED, 4X4, M1152 (2320-01-518-7332)

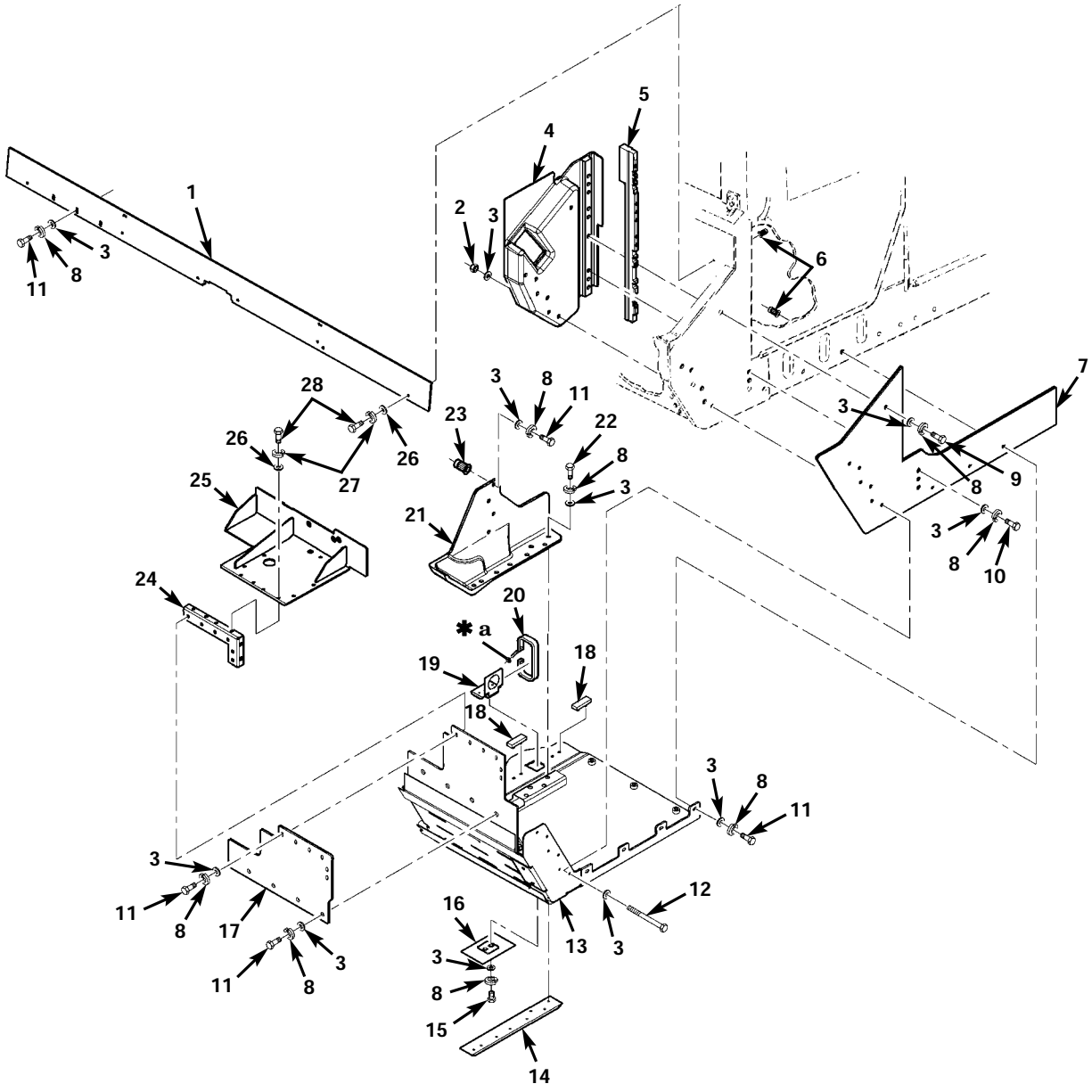

✱a PART OF ITEM 20

Figure 189B. Left Front Underbody Armor (Serial Number 241953 and Below).

(1) ITEM NO	(2) SMR CODE	(3) NSN	(4) CAGEC	(5) PART NUMBER	(6) DESCRIPTION AND USABLE ON CODES(UOC)	(7) QTY
					GROUP 1801 BODY,CAB,HOOD,AND HULL ASSEMBLY	
					FIG. 189B LEFT FRONT UNDERBODY ARMOR(SERIAL NUMBER 241953 AND BELOW)	
* 1	PAOZZ	2540015383499	6W728	6432438-200M1	CAPPING RING LOWER, TAN..... UOC:TTA,UUA,UU2	1
* 2	PAOZZ	5310009359021	96906	MS51943-35	NUT,SELF-LOCKING 3/8-16..... UOC:TTA,UUA,UU2	6
* 3	PAOZZ	5310014124013	24617	2436163	WASHER,FLAT 3/8..... UOC:TTA,UUA,UU2	49
* 4	PAOZZ	9515015442279	6W728	6432284-200M1	CASTING,KICKPANEL OUTER,L.H.,TAN... UOC:TTA,UUA,UU2	1
* 5	PAOZZ	9515015442303	6W728	6432288-200M1	REINFORCEMENT "A" PILLAR,TAN..... UOC:TTA,UUA,UU2	1
* 6	PAOZZ	5325014704625	34623	6001247	INSERT,SCREW,THREAD 3/8-16..... UOC:TTA,UUA,UU2	5
* 7	PAOZZ	2540015383535	6W728	6432610-200M1	SUBASSEMBLY "A" PILLAR,LOWER,TAN... UOC:TTA,UUA,UU2	1
* 8	PAOZZ	5310013344710	80205	MS35338-46	WASHER,LOCK 3/8..... UOC:TTA,UUA,UU2	37
* 9	PAOZZ	5310008213869	80204	B1821BH038C175N	SCREW,CAP,HEXAGON H 3/8-16 X 1.75.. UOC:TTA,UUA,UU2	1
* 10	PAOZZ	5305007813928	80204	B1821BH038C400N	SCREW,CAP,HEXAGON H 3/8-16 X 4.00.. UOC:TTA,UUA,UU2	3
* 11	PAOZZ	5305007252317	80204	B1821BH038C150N	SCREW,CAP,HEXAGON H 3/8-16 X 1.50.. UOC:TTA,UUA,UU2	21
* 12	PAOZZ	5305007829489	80204	B1821BH038C200N	SCREW,CAP,HEXAGON H 3/8-16 X 2.00.. UOC:TTA,UUA,UU2	6
* 13	PAOZZ	2540015361485	6W728	6432255-200M1	UNDERBODY L.H.,FRONT,TAN..... UOC:TTA,UUA,UU2	1
* 14	PAOZZ	9515015442262	6W728	6430679-200M1	RETAINER,UNDERBODY L.H.,FRONT,TAN.. UOC:TTA,UUA,UU2	1
* 15	PAOZZ	5305002693238	80204	B1821BH038F125N	SCREW,CAP,HEXAGON H 3/8-24 X 1.25.. UOC:TTA,UUA,UU2	4
* 16	PAOZZ	5340015603953	6W728	6432495-01M1	PLATE,RETAINER TAN..... UOC:TTA,UUA,UU2	2
* 17	PAOZZ	2540015383506	6W728	6432361-200M1	PLATE,UNDERBODY EXTE L.H.,FRONT,TAN UOC:TTA,UUA,UU2	1
* 18	PAOZZ	5340015357729	6W728	6432550-200M1	BUMPER,RUBBER TAN..... UOC:TTA,UUA,UU2	4
* 19	PAOZZ	5340015360557	6W728	4660639	BRACKET,MOUNTING..... UOC:TTA,UUA,UU2	2
* 20	PAOZZ	5340014563917	14242	ST1536	BAND,RETAINING..... UOC:TTA,UUA,UU2	4
* 21	PAOZZ	9515015442295	6W728	6432286-200M1	CASTING,KICKPANEL INNER,L.H.,TAN... UOC:TTA,UUA,UU2	1
* 22	PAOZZ	5305008465703	80204	B1821BH038C300N	SCREW,CAP,HEXAGON H 3/8-16 X 3.00.. UOC:TTA,UUA,UU2	8
* 23	PAOZZ	5325014088466	78276	AKS4-420-165	INSERT,SCREW THREAD 3/8-16..... UOC:TTA,UUA,UU2	4
* 24	PAOZZ	5340015358780	6W728	6430718-200M1	BRACKET,ANGLE L.H.,FRONT,TAN.....	1

(1) ITEM NO	(2) SMR CODE	(3) NSN	(4) CAGEC	(5) PART NUMBER	(6) DESCRIPTION AND USABLE ON CODES(UOC)	(7) QTY
					UOC:TTA,UUA,UU2	
* 25	PAOZZ	5340015360607	6W728	6430681-200M1	BRACKET,MOUNTING L.H.,FRONT,TAN....	1
					UOC:TTA,UUA,UU2	
* 26	PAOZZ	5310011023270	24617	2436161	WASHER,FLAT 1/4.....	6
					UOC:TTA,UUA,UU2	
* 27	PAOZZ	5310005825965	80205	MS35338-44	WASHER,LOCK 1/4.....	6
					UOC:TTA,UUA,UU2	
* 28	PAOZZ	5305002253843	80204	B1821BH025C100N	SCREW,CAP,HEXAGON H 1/4-20 X 1.00..	6
					UOC:TTA,UUA,UU2	

END OF FIGURE

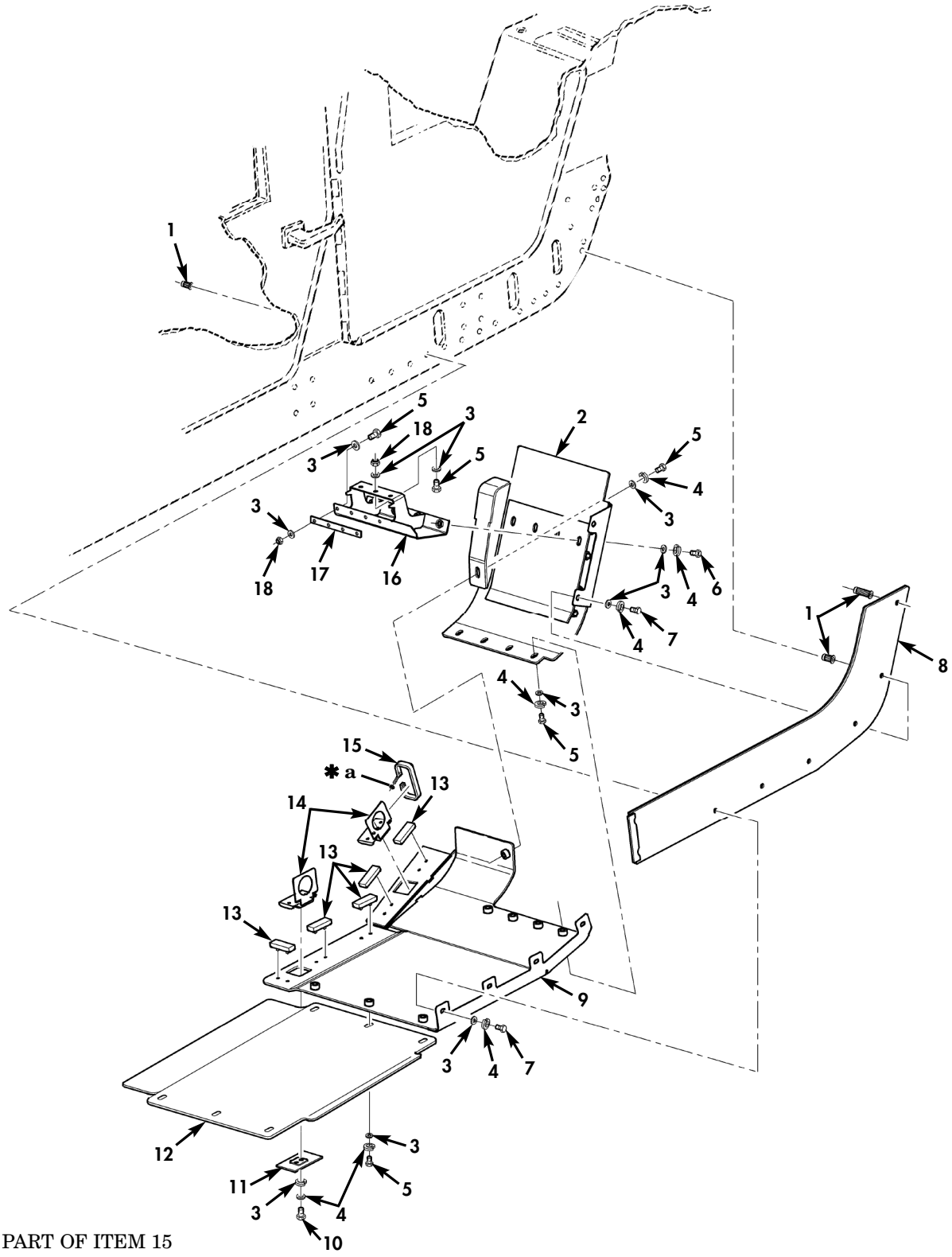

✱a PART OF ITEM 15

Figure 189C. Left Rear Underbody Armor (Serial Number 241953 and Below).

(1) ITEM NO	(2) SMR CODE	(3) NSN	(4) CAGEC	(5) PART NUMBER	(6) DESCRIPTION AND USABLE ON CODES(UOC)	(7) QTY
					GROUP 1801 BODY,CAB,HOOD,AND HULL ASSEMBLY	
					FIG. 189C LEFT REAR UNDERBODY ARMOR (SERIAL NUMBER 241953 AND BELOW)	
* 1	PAOZZ	5325014704625	34623	6001247	INSERT,SCREW THREAD 3/8-16..... UOC:TTA,UUA,UU2	8
* 2	PAOZZ	9515015442736	6W728	6432599-200M1	UNDERBODY ARMOR L.H.,REAR UPPER,TAN UOC:TTA,UUA,UU2	1
* 3	PAOZZ	5310014124013	24617	2436163	WASHER,FLAT 3/8..... UOC:TTA,UUA,UU2	20
* 4	PAOZZ	5310013344710	80205	MS35338-46	WASHER,LOCK 3/8..... UOC:TTA,UUA,UU2	22
* 5	PAOZZ	5305000680511	80204	B1821BH038C125N	SCREW,CAP,HEXAGON H 3/8-16 X 1.25.. UOC:TTA,UUA,UU2	15
* 6	PAOZZ	5305000680510	80204	B1821BH038C100N	SCREW,CAP,HEXAGON H 3/8-16 X 1.00.. UOC:TTA,UUA,UU2	4
* 7	PAOZZ	5305007252317	80204	B1821BH038C150N	SCREW,CAP,HEXAGON H 3/8-16 X 1.50.. UOC:TTA,UUA,UU2	6
* 8	PAOZZ	2540015383560	6W728	6432634-200M1	SUBASSEMBLY,ROCKER L.H.,TAN..... UOC:TTA,UUA,UU2	1
* 9	PAOZZ	9515015442256	6W728	6432310-200M1	UNDERBODY ARMOR L.H.,REAR,LOWER TAN UOC:TTA,UUA,UU2	1
* 10	PAOZZ	5305002693238	80204	B1821BH038F125N	SCREW,CAP,HEXAGON H 3/8-24 X 1.25.. UOC:TTA,UUA,UU2	4
* 11	PAOZZ	5340015603953	6W728	6432495-01M1	PLATE,RETAINER TAN..... UOC:TTA,UUA,UU2	2
* 12	PAOZZ	9515015361111	6W728	6432591	PLATE,UNDERBODY EX TAN..... UOC:TTA,UUA,UU2	1
* 13	PAOZZ	5340015357729	6W728	6432550-200M1	BUMPER,RUBBER TAN..... UOC:TTA,UUA,UU2	5
* 14	PAOZZ	5340015360557	6W728	4660639	BRACKET,MOUNTING..... UOC:TTA,UUA,UU2	2
* 15	PAOZZ	5340014563917	6W728	4668988	BAND CLAMP..... UOC:TTA,UUA,UU2	4
* 16	PAOZZ	5340015358707	6W728	6432565-200M1	BRACKET,MOUNTING L.H.,REAR,TAN..... UOC:TTA,UUA,UU2	1
* 17	PAOZZ	5340015364269	6W728	6432702-200M1	PLATE,MOUNTING,REAR UNDERDOBY,TAN.. UOC:TTA,UUA,UU2	1
* 18	PAOZZ	5310009359021	96906	MS51943-35	NUT,SELF-LOCKING 3/8-16..... UOC:TTA,UUA,UU2	7

END OF FIGURE

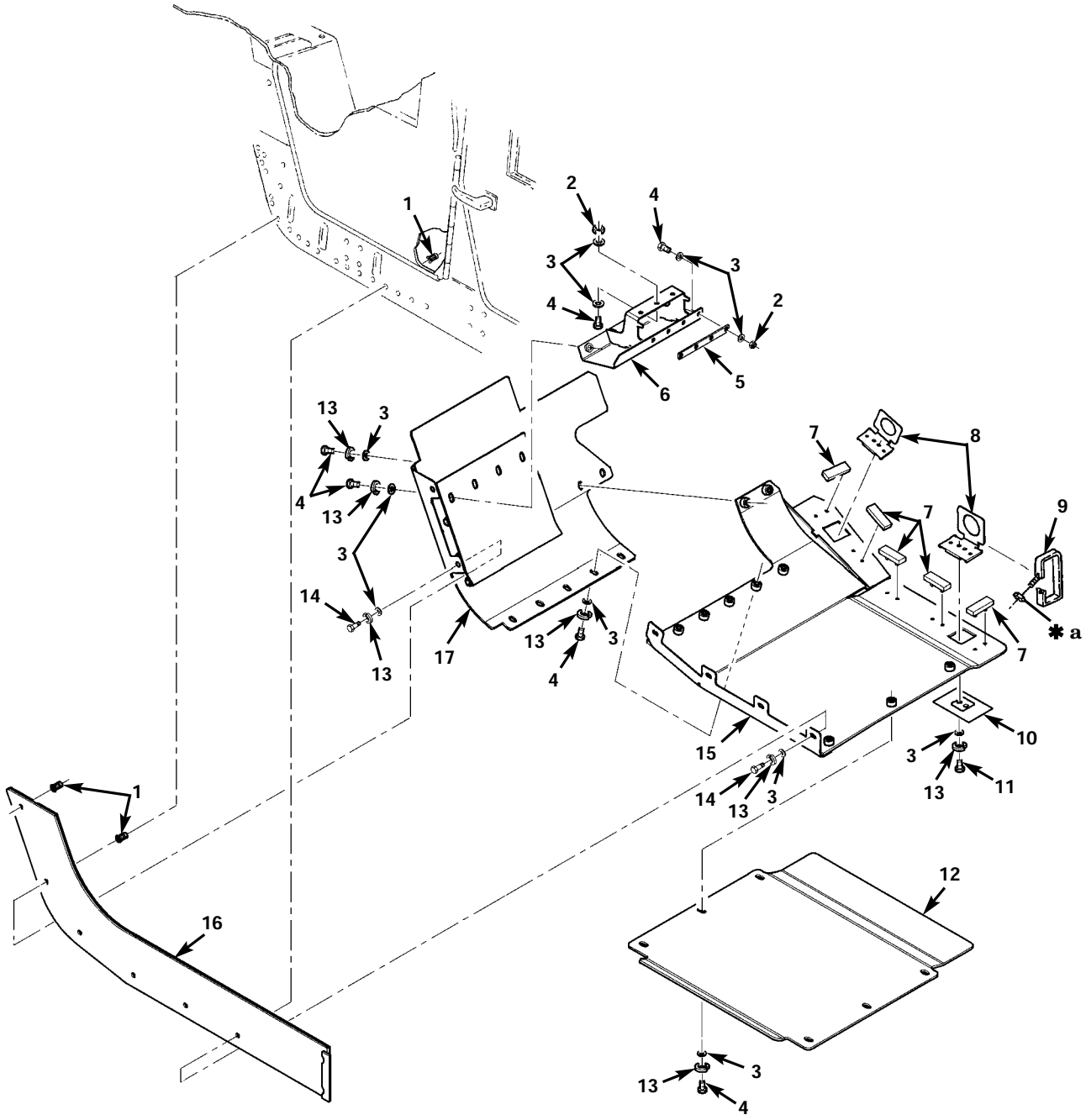

✱**a** PART OF ITEM 9

Figure 189D. Right Rear Underbody Armor (Serial Number 241953 and Below).

(1) ITEM NO	(2) SMR CODE	(3) NSN	(4) CAGEC	(5) PART NUMBER	(6) DESCRIPTION AND USABLE ON CODES(UOC)	(7) QTY
					GROUP 1801 BODY,CAB,HOOD,AND HULL ASSEMBLY	
					FIG. 189D RIGHT REAR UNDERBODY ARMOR (SERIAL NUMBER 241953 AND BELOW)	
* 1	PAOZZ	5325014704625	34623	6001247	INSERT,SCREW,THREAD 3/8-16..... UOC:TTA,UUA,UU2	6
* 2	PAOZZ	5310009359021	96906	MS51943-35	NUT,SELF-LOCKING 3/8-16..... UOC:TTA,UUA,UU2	7
* 3	PAOZZ	5310014124013	24617	2436163	WASHER,FLAT 3/8..... UOC:TTA,UUA,UU2	34
* 4	PAOZZ	5305000680511	80204	B1821BH038C125N	SCREW,CAP,HEXAGON H 3/8-16 X 1.25.. UOC:TTA,UUA,UU2	23
* 5	PAOZZ	5340015364269	6W728	6432702-200M1	PLATE,MOUNTING REAR,TAN..... UOC:TTA,UUA,UU2	1
* 6	PAOZZ	5340015364636	6W728	6432564-200M1	BRACKET,MOUNTING R.H.,REAR,TAN..... UOC:TTA,UUA,UU2	1
* 7	PAOZZ	5340015357729	6W728	6432550-200M1	BUMPER,NONMETALLIC TAN..... UOC:TTA,UUA,UU2	5
* 8	PAOZZ	5340015360557	6W728	4660639-000	WELDMENT,BRACKET..... UOC:TTA,UUA,UU2	2
* 9	PAOZZ	5340014563917	14242	ST1536	BAND,RETAINING..... UOC:TTA,UUA,UU2	4
* 10	PAOZZ	5340015603953	6W728	6432495-01M1	PLATE,RETAINER..... UOC:TTA,UUA,UU2	2
* 11	PAOZZ	5305002693238	80204	B1821BH038F125N	SCREW,CAP,HEXAGON H 3/8-24 X 1.25.. UOC:TTA,UUA,UU2	4
* 12	PAOZZ	9515015361111	6W728	6432591	PLATE,UNDERBODY EXTENSION,TAN..... UOC:TTA,UUA,UU2	1
* 13	PAOZZ	5310013344710	80205	MS35338-46	WASHER,LOCK 3/8..... UOC:TTA,UUA,UU2	20
* 14	PAOZZ	5305007252317	80204	B1821BH038C150N	SCREW,CAP,HEXAGON H 3/8-16 X 1.50.. UOC:TTA,UUA,UU2	6
* 15	PAOZZ	9515015361262	6W728	6432309	UNDERBODY R.H.,REAR,LOWER,TAN..... UOC:TTA,UUA,UU2	1
* 16	PAOZZ	2540015383564	6W728	6432639-200M1	SUBASSEMBLY,ROCKER R.H.,TAN..... UOC:TTA,UUA,UU2	1
* 17	PAOZZ	9515005360617	6W728	6432600	UNDERBODY R.H.,REAR,UPPER,TAN..... UOC:TTA,UUA,UU2	1

END OF FIGURE

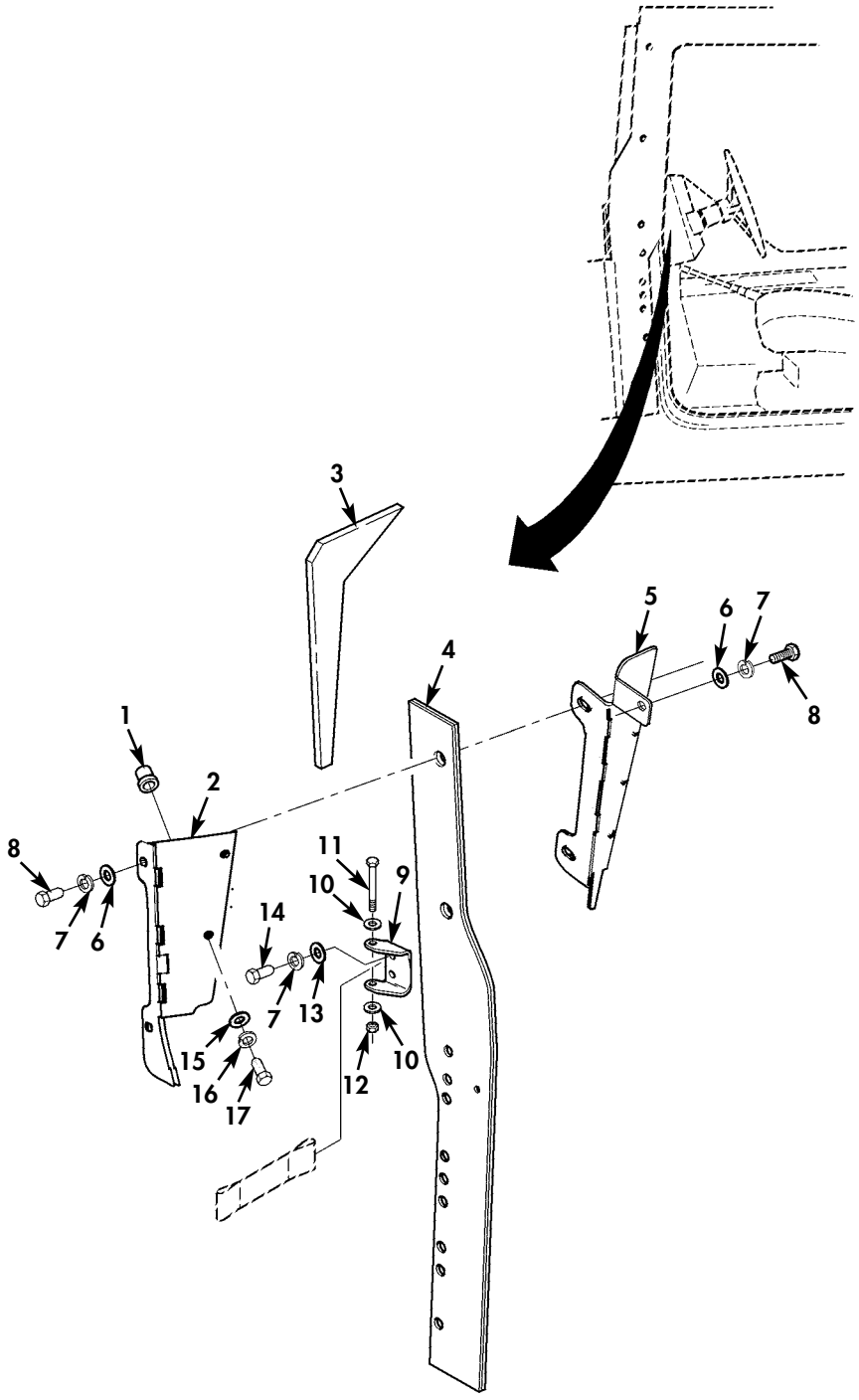

✱ QUANTITY SHOWN
REFLECTS ONE SIDE

Figure 189E. A-Pillar Perimeter Armor.

(1) ITEM NO	(2) SMR CODE	(3) NSN	(4) CAGEC	(5) PART NUMBER	(6) DESCRIPTION AND USABLE ON CODES(UOC)	(7) QTY
					GROUP 1801 BODY,CAB,HOOD,AND HULL ASSEMBLY	
					FIG. 189E A-PILLAR PERIMETER ARMOR	
* 1	PAOZZ	5310015212135	6W728	4397050-025	NUT,PLAIN,BLIND RIV 1/4-20..... UOC:TTA,UUA,UU2	2
* 2	PAOZZ	9515015382319	6W728	6432718-200M1	ARMOR,PLATE R.H..... UOC:TTA,UUA,UU2	1
* 2	PAOZZ	9515015383217	6W728	6432673-200M1	ARMOR,PLATE L.H..... UOC:TTA,UUA,UU2	1
* 3	PAOZZ		34623	6023955	INSULATION,THERMAL L.H. OR R.H..... UOC:TTA,UUA,UU2	1
* 4	PAOZZ		34623	6030365	ARMOR,PLATE L.H.,A-PILLAR UPPER..... FRAG-1 UOC:TTA,UU2	1
* 4	PAOZZ		34623	6030366	ARMOR,PLATE R.H.,A-PILLAR UPPER..... FRAG-1 UOC:TTA,UU2	1
* 4	PAOZZ	9515015383201	6W728	6432641-200M1	ARMOR,PLATE L.H.,UPPER..... UOC:TTA,UUA,UU2	1
* 4	PAOZZ	9515015383205	6W728	6432646-200M1	ARMOR,PLATE R.H.,UPPER..... UOC:TTA,UUA,UU2	1
* 5	PAOZZ	5340015355700	6W728	6432772-200M1	BRACKET,MULTIPLE AN GAP,L.H..... UOC:TTA,UUA,UU2	1
* 5	PAOZZ	5340015360653	6W728	6432773-200M1	BRACKET,MOUNTING GAP,R.H..... UOC:TTA,UUA,UU2	1
* 6	PAOZZ	5310009643415	19207	10910174-19	WASHER,FLAT 5/16..... UOC:TTA,UUA,UU2	4
* 7	PAOZZ	5310004079566	80205	MS35338-45	WASHER,LOCK 5/16..... UOC:TTA,UUA,UU2	6
* 8	PAOZZ	5305002264831	80204	B1821BH031C150N	SCREW,CAP,HEXAGON H 5/16-18 X 1.50.. UOC:TTA,UUA,UU2	4
* 9	PAOZZ		34623	6031663	BRACKET,VEHICULAR C CHECK STRAP..... UOC:TTA,UUA,UU2	1
* 9	PAOZZ		34623	6032075	BRACKET,DOUBLE ANGL A-PILLAR DOOR STRAP,FRAG-1..... UOC:TTA,UU2	1
* 10	PAOZZ	5310011191024	24617	2436162	WASHER,FLAT 5/16..... UOC:TTA,UUA,UU2	4
* 11	PAOZZ	5306002264838	80204	B1821BH031C325N	BOLT,MACHINE 5/16-18 X 3.25..... UOC:TTA,UUA,UU2	1
* 12	PAOZZ	5310008140673	81349	M45913/3-5CG8C	NUT,SELF-LOCKING,HE 5/16-18..... UOC:TTA,UUA,UU2	1
* 13	PAOZZ	5310000814219	96906	MS27183-12	WASHER,FLAT 5/16..... UOC:TTA,UUA,UU2	2
* 14	PAOZZ	5306002264826	80204	B1821BH031C088N	BOLT,MACHINE 5/16-18 X 7/8..... UOC:TTA,UUA,UU2	2
* 15	PAOZZ	5310000581305	19200	10910174-20	WASHER,FLAT 1/4..... UOC:TTA,UUA,UU2	2
* 16	PAOZZ	5310005825965	80205	MS35338-44	WASHER,LOCK 1/4..... UOC:TTA,UUA,UU2	2
* 17	PAOZZ	5305000712509	80204	B1821BH025C150N	SCREW,CAP,HEXAGON H 1/4-20 X 1.50... UOC:TTA,UUA,UU2	2

END OF FIGURE

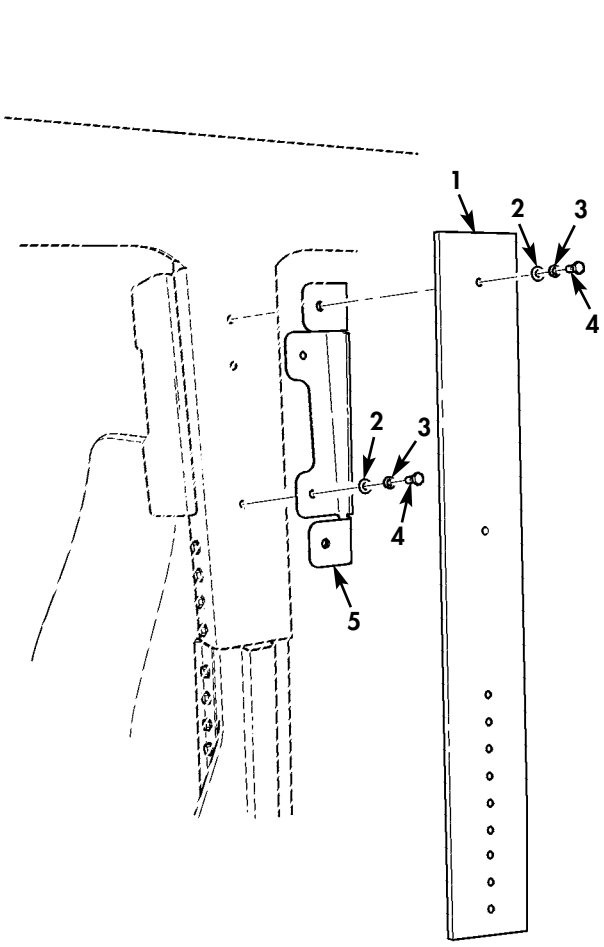

M1152A1/M1165A1

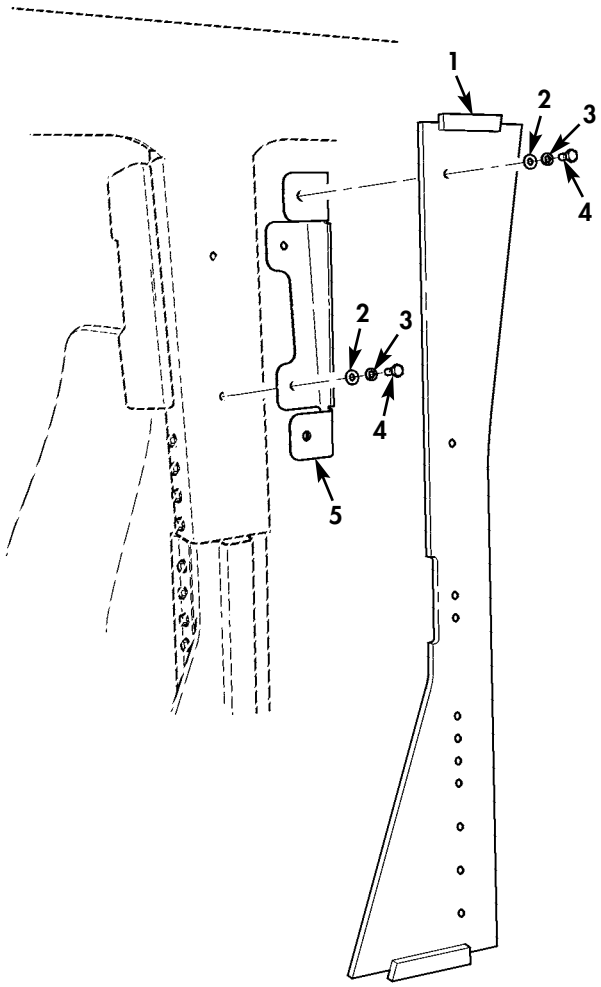

M1151A1

✱ QUANTITY SHOWN
REFLECTS ONE SIDE

Figure 189F. B-Pillar Perimeter Armor.

(1) ITEM NO	(2) SMR CODE	(3) NSN	(4) CAGEC	(5) PART NUMBER	(6) DESCRIPTION AND USABLE ON CODES(UOC)	(7) QTY
					GROUP 1801 BODY,CAB,HOOD,AND HULL ASSEMBLY	
					FIG. 189F B-PILLAR PERIMETER ARMOR	
* 1	PAOZZ		34623	6030337	ARMOR PLATE L.H. OR R.H..... UOC:UUA,UU2	1
* 1	PAOZZ	9515015383531	6W728	6432617-200M1	ARMOR,PLATE L.H..... UOC:TTA	1
* 1	PAOZZ	9515015383565	6W728	6432623-200M1	ARMOR,PLATE R.H..... UOC:TTA	1
* 2	PAOZZ	5310009871294	19200	10910174-16	WASHER,FLAT 3/8..... UOC:TTA,UUA,UU2	4
* 3	PAOZZ	5310006379541	65035	P49866-11	WASHER,LOCK 3/8..... UOC:TTA,UUA,UU2	4
* 4	PAOZZ	5305000680511	80204	B1821BH038C125N	SCREW,CAP,HEXAGON H 3/8-16 X 1.25... UOC:UUA,UU2	4
* 4	PAOZZ	5305007252317	80204	B1821BH038C150N	SCREW,CAP,HEXAGON H 3/8-16 X 1.50... UOC:TTA	4
* 5	PAOZZ		34623	6023771	BRACKET,VEHICULAR C..... UOC:TTA	1
* 5	PAOZZ	5340015364362	6W728	6432624-200M1	BRACKET,MOUNTING..... UOC:UUA,UU2	1

END OF FIGURE

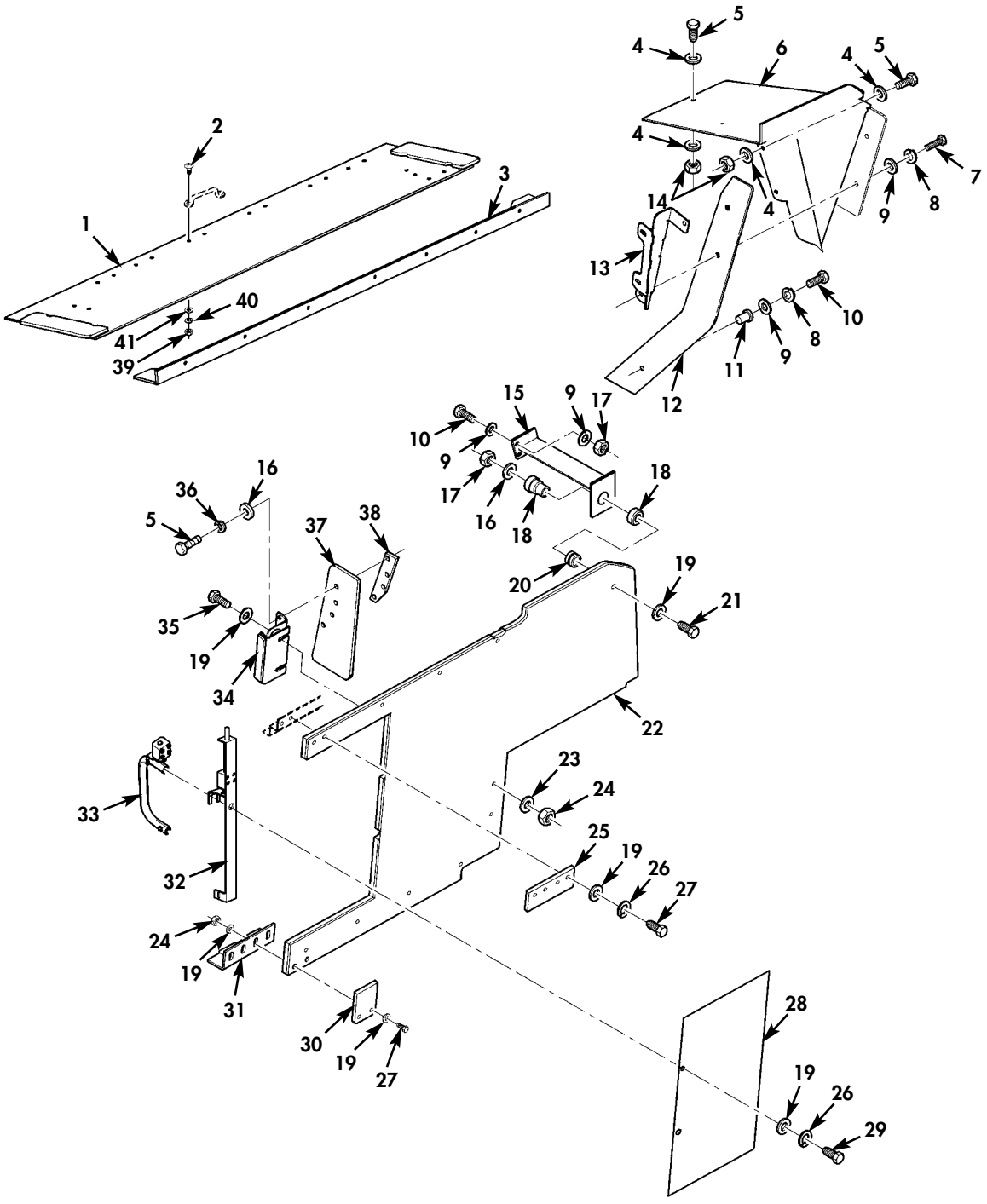

✱ QUANTITY SHOWN
REFLECTS ONE SIDE

Figure 189G. C-Partition, C-Pillar Armor, and Related Hardware.

(1) ITEM NO	(2) SMR CODE	(3) NSN	(4) CAGEC	(5) PART NUMBER	(6) DESCRIPTION AND USABLE ON CODES(UOC)	(7) QTY
					GROUP 1801 BODY,CAB,HOOD,AND HULL ASSEMBLY	
					FIG. 189G C-PARTITION,C-PILLAR ARMOR,AND RELATED HARDWARE	
* 1	PAOZZ	9515015384301	6W728	6432783-200M1	ARMOR,PLATE..... UOC:TTA	1
* 2	PAOZZ	5305009585247	80204	ANSI B18.6.3	SCREW,MACHINE 10-24 X 1.25..... UOC:TTA	16
* 3	PAOZZ	9515015384310	6W728	6432786-200M1	ARMOR,PLATE CENTER..... UOC:TTA	1
* 4	PAOZZ	5310011023270	24617	2436161	WASHER,FLAT 1/4..... UOC:TTA	10
* 5	PAOZZ	5305000680509	80204	B1821BH025C125N	SCREW,CAP,HEXAGON H 1/4-20 X 1.25... UOC:TTA	9
* 6	PAOZZ	9515015384337	6W728	6432429-200M1	ARMOR,PLATE C-PILLAR,L.H..... UOC:TTA	1
* 6	PAOZZ	9515015364092	6W728	6432430-200M1	ARMOR,PLATE C-PILLAR,R.H..... UOC:TTA	1
* 7	PAOZZ	5305008213869	80204	B1821BH038C175N	SCREW,CAP,HEXAGON H 3/8-16 X 1.75... UOC:TTA	2
* 8	PAOZZ	5310006379541	65035	P49866-11	WASHER,LOCK 3/8..... UOC:TTA	3
* 9	PAOZZ	5310009871294	19200	10910174-16	WASHER,FLAT 3/8..... UOC:TTA	7
* 10	PAOZZ	5305007252317	80204	B1821BH038C150N	SCREW,CAP,HEXAGON H 3/8-16 X 1.50... UOC:TTA	3
* 11	PAOZZ	5325014749732	78276	ALS7-616-150	INSERT,SCREW THREAD 3/8-16..... UOC:TTA	1
* 12	PAOZZ	9515015383570	6W728	6432769-200M1	ARMOR,PLATE R.H..... UOC:TTA	1
* 12	PAOZZ	9501015383566	6W728	6432768-200M1	ARMOR,PLATE L.H..... UOC:TTA	1
* 13	PAOZZ	5340015358280	6W728	6432625-200M1	BRACKET,MOUNTING GAP,R.H..... UOC:TTA	1
* 13	PAOZZ	5340015360547	6W728	6432658-200M1	BRACKET,MOUNTING GAP,L.H..... UOC:TTA	1
* 14	PAOZZ	5310014398173	6W728	4397064-001	NUT,SELF-LOCKING,HE 1/4-20..... UOC:TTA	5
* 15	PAOZZ	5340015360480	6W728	6432434-200M1	BRACKET,MULTIPLE AN L.H..... UOC:TTA	1
* 15	PAOZZ	5340015358682	6W728	6432570-200M1	BRACKET,MULTIPLE AN R.H..... UOC:TTA	1
* 16	PAOZZ	5310012113811	24617	9417793	WASHER,FLAT 3/8..... UOC:TTA	1
* 17	PAOZZ	5310009359021	96906	MS51943-35	NUT,SELF-LOCKING,HE 3/8-16..... UOC:TTA	3
* 18	PAOZZ	5365014177792	6W728	4668958	BUSHING,NONMETALLIC..... UOC:TTA	1
* 19	PAOZZ	5310014192413	6W728	4397005-014	WASHER,FLAT 3/8..... UOC:TTA	11
* 20	PAOZZ	5365014340104	6W728	4660523	SPACER,SLEEVE..... UOC:TTA	1

(1) ITEM NO	(2) SMR CODE	(3) NSN	(4) CAGEC	(5) PART NUMBER	(6) DESCRIPTION AND USABLE ON CODES(UOC)	(7) QTY
* 21	PAOZZ	5305014750404	6W728	4397000-072	SCREW,CAP,HEXAGON H 3/8-16 X 3.50... UOC:TTA	1
* 22	PAOZZ	2540015363021	6W728	6432428-200M1	ARMOR,SUPPLEMENTAL L.H..... UOC:TTA	1
* 22	PAOZZ	2540015364078	6W728	6432427-200M1	ARMOR,SUPPLEMENTAL R.H..... UOC:TTA	1
* 23	PAOZZ	5310014357791	6W728	4397005-075	WASHER,FLAT 3/8..... UOC:TTA	2
* 24	PAOZZ	5310014398177	6W728	4397064-005	NUT,SELF-LOCKING,HE 3/8-16..... UOC:TTA	4
* 25	PAOZZ	9515015366163	6W728	6432670-200M1	ARMOR,PLATE C-PARTITION..... UOC:TTA	1
* 26	PAOZZ	5310014177273	6W728	4397004-008	WASHER,LOCK 3/8..... UOC:TTA	4
* 27	PAOZZ	5306014485073	6W728	4397000-066	BOLT,MACHINE 3/8-16 X 2.00..... UOC:TTA	4
* 28	PAOZZ	2510015371092	6W728	6432585-200M1	DOOR,HATCH,VEHICLE L.H..... UOC:TTA	1
* 28	PAOZZ	2510015363001	6W728	6432588-200M1	DOOR,HATCH,VEHICLE R.H..... UOC:TTA	1
* 29	PAOZZ	5305006388920	80204	B1821BH038C225N	SCREW,CAP,HEXAGON H 3/8-16 X 2.25... UOC:TTA	2
* 30	PAOZZ	9515015364210	6W728	6432661-200M1	ARMOR,PLATE..... UOC:TTA	1
* 31	PAOZZ	5340015360605	6W728	6432572-200M1	BRACKET,ANGLE..... UOC:TTA	1
* 32	PAOZZ	2540015359671	6W728	6432713-200M1	LATCH,DOOR,VEHICLE R.H..... UOC:TTA	1
* 32	PAOZZ	2540015361442	6W728	6432714-200M1	LATCH,DOOR,VEHICLE L.H..... UOC:TTA	1
* 33	PAOZZ	5340015355662	6W728	6431639-200M1	HANDLE,BOW..... UOC:TTA	1
* 34	PAOZZ	5340014339281	6W728	4660520	BRACKET,MOUNTING..... UOC:TTA	1
* 35	PAOZZ	5306014464661	6W728	4397000-070	SCREW,CAP,HEXAGON H 3/8-16 X 3.00... UOC:TTA	2
* 36	PAOZZ	5310014330941	6W728	4397004-006	WASHER,LOCK 1/4..... UOC:TTA	4
* 37	PAOZZ	9515015364108	6W728	6432722-200M1	ARMOR,PLATE..... UOC:TTA	1
* 38	PAOZZ	5340015314949	6W728	4660656-000	COVER STRIP..... UOC:TTA	1
* 39	PAOZZ	5310009349758	96906	MS35649-202	NUT,PLAIN,HEXAGON #10-24..... UOC:TTA	4
* 40	PAOZZ	5310000453296	80205	MS35338-43	WASHER,LOCK #10..... UOC:TTA	4
* 41	PAOZZ	5310000120391	24617	120391	WASHER,FLAT #10..... UOC:TTA	4

END OF FIGURE

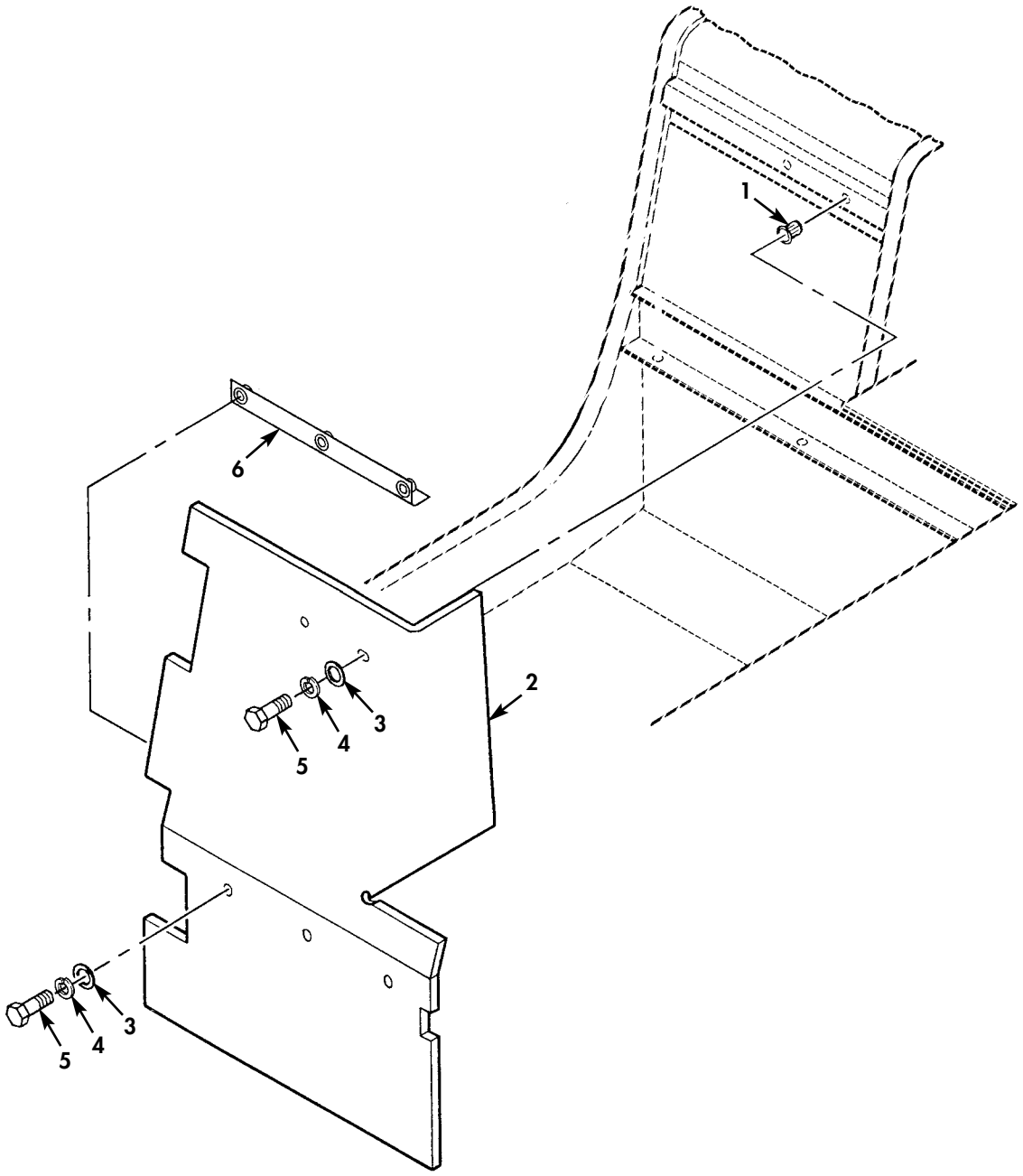

✱ QUANTITY SHOWN
REFLECTS ONE SIDE

Figure 189H. Rear Seat Backing.

(1) ITEM NO	(2) SMR CODE	(3) NSN	(4) CAGEC	(5) PART NUMBER	(6) DESCRIPTION AND USABLE ON CODES(UOC)	(7) QTY
					GROUP 1801 BODY,CAB,HOOD,AND HULL ASSEMBLY	
					FIG. 189H REAR SEAT BACKING	
* 1	PAOZZ	5325014749732	78276	ALS7-616-150	INSERT,SCREW THREAD..... UOC:TTA,TT1,UU2	2
* 2	PAOZZ	9515015382884	6W728	6432432-200M1	ARMOR,PLATE L.H.,REAR SEAT BACKING.. UOC:TTA,TT1,UU2	1
* 2	PAOZZ	9515015383042	6W728	6432433-200M1	ARMOR,PLATE R.H.,REAR SEAT BACKING.. UOC:TTA,TT1,UU2	1
* 3	PAOZZ	5310009871294	19200	10910174-16	WASHER,FLAT 3/8..... UOC:TTA,TT1,UU2	5
* 4	PAOZZ	5310000045033	80205	MS35338-46	WASHER,LOCK 3/8..... UOC:TTA,TT1,UU2	5
* 5	PAOZZ	5305007252317	80204	B1821BH038C150N	SCREW,CAP,HEXAGON H 3/8-16 X 1.50... UOC:TTA,TT1,UU2	5
* 6	PAOZZ		6W728	4660680-001	BRACKET,VEHICULAR C L.H. OR R.H..... UOC:TTA,TT1,UU2	1

END OF FIGURE

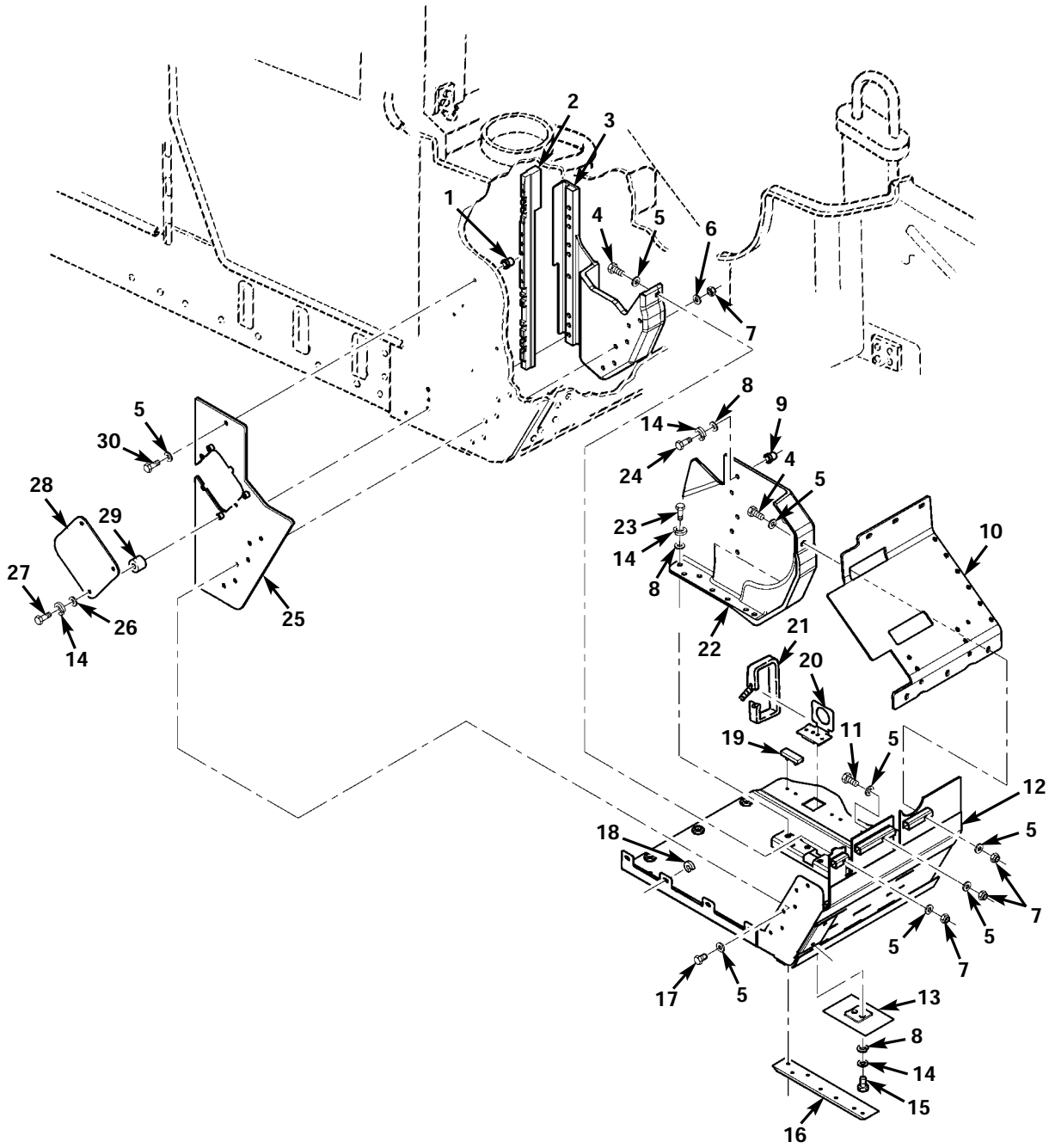

Figure 189I. Right Front Underbody Enhanced IAP Armor (Serial Number 241954 and Above).

(1) ITEM NO	(2) SMR CODE	(3) NSN	(4) CAGEC	(5) PART NUMBER	(6) DESCRIPTION AND USABLE ON CODES(UOC)	(7) QTY
					GROUP 1801 BODY,CAB,HOOD,AND HULL ASSEMBLY	
					FIG. 189I RIGHT FRONT UNDERBODY ENHANCED IAP ARMOR(SERIAL NUMBER 241954 AND ABOVE)	
* 1	PAOZZ	5325014704625	34623	6001247	INSERT,SCREW THREAD 3/8-16..... UOC:TTA,TT1,UUA,UU2	1
* 2	PAOZZ	9515015363579	6W728	6432288	STRIP,METAL A-PILLAR..... UOC:TTA,TT1,UUA,UU2	1
* 3	PAOZZ	9515015361114	6W728	6432285	PLATE,METAL..... UOC:TTA,TT1,UUA,UU2	1
* 4	PAOZZ	5305008080864	80204	B1821BH038C325N	SCREW,CAP,HEXAGON H 3/8-16 X 3.25.. UOC:TTA,TT1,UUA,UU2	2
* 5	PAOZZ	5310009871294	19200	10910174-16	WASHER,FLAT 3/8..... UOC:TTA,TT1,UUA,UU2	13
* 6	PAOZZ	5310012866077	19207	12341856	WASHER,FLAT 3/8..... UOC:TTA,TT1,UUA,UU2	6
* 7	PAOZZ	5310009359021	96906	MS51943-35	NUT,SELF-LOCKING,HE 3/8-16..... UOC:TTA,TT1,UUA,UU2	9
* 8	PAOZZ	5310014124013	24617	2436163	WASHER,FLAT 3/8..... UOC:TTA,TT1,UUA,UU2	14
* 9	PAOZZ	5325015634618	78276	ALS9B-616-312	INSERT,SCREW THREAD 3/8-16..... UOC:TTA,TT1,UUA,UU2	5
* 10	PAOZZ	9515015383523	6W728	6432362-200M1	ARMOR,PLATE UPPER..... UOC:TTA,TT1,UUA,UU2	1
* 11	PAOZZ	5305007813926	80204	B1821BH038C275N	SCREW,CAP,HEXAGON H 3/8-16 X 2.75.. UOC:TTA,TT1,UUA,UU2	1
* 12	PAOZZ	9515015361260	6W728	6432253	PLATE,FLOOR,METAL..... UOC:TTA,TT1,UUA,UU2	1
* 13	PAOZZ	5340015603953	6W728	6432495-01M1	PLATE,MOUNTING..... UOC:TTA,TT1,UUA,UU2	1
* 14	PAOZZ	5310006379541	65035	P49866-11	WASHER,LOCK 3/8..... UOC:TTA,TT1,UUA,UU2	17
* 15	PAOZZ	5305002693236	80204	B1821BH038F100N	SCREW,CAP,HEXAGON H 3/8-24 X 1.00.. UOC:TTA,TT1,UUA,UU2	2
* 16	PAOZZ	9515015360928	6W728	6430680	STRIP,METAL..... UOC:TTA,TT1,UUA,UU2	1
* 17	PAOZZ	5305006388920	80204	B1821BH038C225N	SCREW,CAP,HEXAGON H 3/8-16 X 2.25.. UOC:TTA,TT1,UUA,UU2	6
* 18	PAOZZ		34623	6030828	SPACER..... UOC:TTA,TT1,UUA,UU2	2
* 19	PAOZZ	5340015357729	6W728	6432550-200M1	BUMPER,RUBBER..... UOC:TTA,TT1,UUA,UU2	5
* 20	PAOZZ	5340015360557	6W728	4660639	BRACKET,MOUNTING..... UOC:TTA,TT1,UUA,UU2	1
* 21	PAOZZ	5340014563917	6W728	4668988-000	BAND,RETAINING..... UOC:TTA,TT1,UUA,UU2	1
* 22	PAOZZ	9515015361070	6W728	6432287	PLATE,METAL..... UOC:TTA,TT1,UUA,UU2	1
* 23	PAOZZ	5305008465703	80204	B1821BH038C300N	SCREW,CAP,HEXAGON H 3/8-16 X 3.00.. UOC:TTA,TT1,UUA,UU2	7

(1) ITEM NO	(2) SMR CODE	(3) NSN	(4) CAGEC	(5) PART NUMBER	(6) DESCRIPTION AND USABLE ON CODES(UOC)	(7) QTY
* 24	PAOZZ	5305007252317	80204	B1821BH038C150N	SCREW,CAP,HEXAGON H 3/8-16 X 1.50.. UOC:TTA,TT1,UUA,UU2	5
* 25	PAOZZ		34623	6034235	ARMOR,PLATE A-PILLAR,R.H.,LOWER.... UOC:TTA,TT1,UUA,UU2	1
* 26	PAOZZ	5310008775972	19200	10910174-3	WASHER,FLAT 3/8..... UOC:TTA,TT1,UUA,UU2	3
* 27	PAOZZ	5305000680510	80204	B1821BH038C100N	SCREW,CAP,HEXAGON H 3/8-16 X 1.00.. UOC:TTA,TT1,UUA,UU2	3
* 28	PAOZZ	2540015546785	34623	6030380	ARMOR,PLATE BREATHER COVER..... UOC:TTA,TT1,UUA,UU2	1
* 29	PAOZZ		6W728	6432651-200M1	SPACER..... UOC:TTA,TT1,UUA,UU2	3
* 30	PAOZZ	5305008213869	80204	B1821BH038C175N	SCREW,CAP,HEXAGON H 3/8-16 X 1.75.. UOC:TTA,TT1,UUA,UU2	1

END OF FIGURE

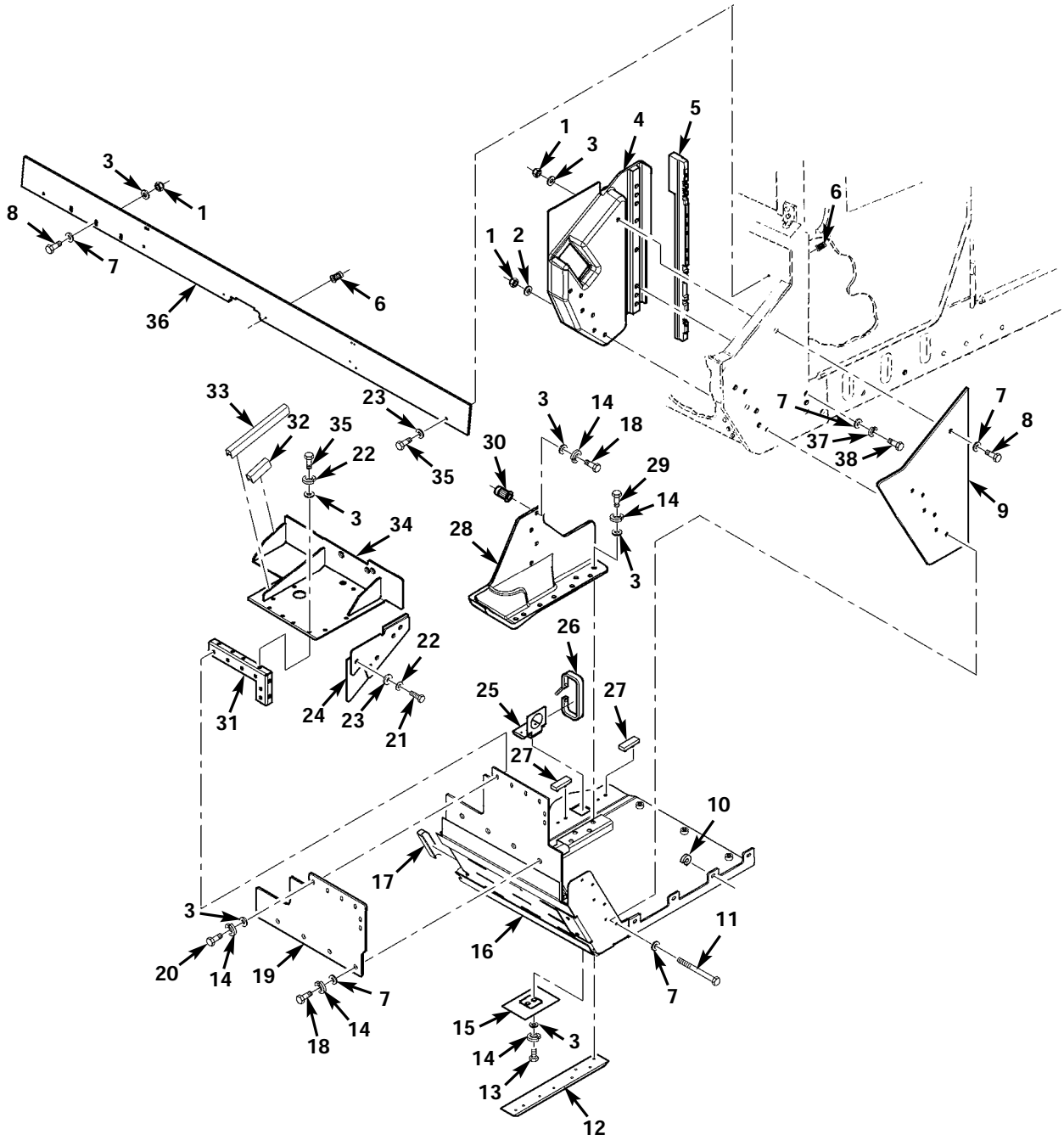

Figure 189J. Left Front Underbody Enhanced IAP Armor (Serial Number 241954 and Above).

(1) ITEM NO	(2) SMR CODE	(3) NSN	(4) CAGEC	(5) PART NUMBER	(6) DESCRIPTION AND USABLE ON CODES(UOC)	(7) QTY
					GROUP 1801 BODY,CAB,HOOD,AND HULL ASSEMBLY	
					FIG. 189J LEFT FRONT UNDERBODY ENHANCED IAP ARMOR(SERIAL NUMBER 241954 AND ABOVE)	
* 1	PAOZZ	5310009359021	96906	MS51943-35	NUT,SELF-LOCKING,HE 3/8-16..... UOC:TTA,TT1,UUA,UU2	11
* 2	PAOZZ	5310012866077	19207	12341856	WASHER,FLAT 3/8..... UOC:TTA,TT1,UUA,UU2	6
* 3	PAOZZ	5310014124013	24617	2436163	WASHER,FLAT 3/8..... UOC:TTA,TT1,UUA,UU2	33
* 4	PAOZZ	9515015361261	6W728	6432284	PLATE,METAL..... UOC:TTA,TT1,UUA,UU2	1
* 5	PAOZZ	9515015363579	6W728	6432288	STRIP,METAL A-PILLAR..... UOC:TTA,TT1,UUA,UU2	1
* 6	PAOZZ	5310014113422	78276	ALS4-420-165	INSERT,SCREW,THREAD 1/4-20..... UOC:TTA,TT1,UUA,UU2	4
* 7	PAOZZ	5310009871294	19200	10910174-16	WASHER,FLAT 3/8..... UOC:TTA,TT1,UUA,UU2	21
* 8	PAOZZ	5305008213869	80204	B1821BH038C175N	SCREW,CAP,HEXAGON H 3/8-16 X 1.75.. UOC:TTA,TT1,UUA,UU2	1
* 9	PAOZZ		34623	6037839	ARMOR,PLATE A-PILLAR,L.H.,LOWER.... UOC:TTA,TT1,UUA,UU2	1
* 10	PAOZZ		34623	6030828	SPACER 1/2 INCH THICK..... UOC:TTA,TT1,UUA,UU2	4
* 11	PAOZZ	5305006388920	80204	B1821BH038C225N	SCREW,CAP,HEXAGON H 3/8-16 X 2.25.. UOC:TTA,TT1,UUA,UU2	6
* 12	PAOZZ	9515015361254	6W728	6430679	STRIP,METAL..... UOC:TTA,TT1,UUA,UU2	1
* 13	PAOZZ	5305002693236	80204	B1821BH038F100N	SCREW,CAP,HEXAGON H 3/8-24 X 1.00.. UOC:TTA,TT1,UUA,UU2	4
* 14	PAOZZ	5310006379541	65035	P49866-11	WASHER,LOCK 3/8..... UOC:TTA,TT1,UUA,UU2	29
* 15	PAOZZ	5340015603953	6W728	6432495-01M1	PLATE,MOUNTING..... UOC:TTA,TT1,UUA,UU2	2
* 16	PAOZZ	9515015361485	6W728	6432255	PLATE,FLOOR,METAL..... UOC:TTA,TT1,UUA,UU2	1
* 17	MOOZZ		34623	6029020-3	EDGE PROTECTOR MAKE FROM TRIM EDGE,P/N 6027320,3 INCHES LONG..... UOC:TTA,TT1,UUA,UU2	1
* 18	PAOZZ	5305007252317	80204	B1821BH038C150N	SCREW,CAP,HEXAGON H 3/8-16 X 1.50.. UOC:TTA,TT1,UUA,UU2	4
* 19	PAOZZ	9515015363506	6W728	6432361-200M1	ARMOR,PLATE..... UOC:TTA,TT1,UUA,UU2	1
* 20	PAOZZ	5305000680511	80204	B1821BH038C125N	SCREW,CAP,HEXAGON H 3/8-16 X 1.25.. UOC:TTA,TT1,UUA,UU2	6
* 21	PAOZZ	5305002253841	80204	B1821BH025C138N	SCREW,CAP,HEXAGON H 1/4-20 X 1.375. UOC:TTA,TT1,UUA,UU2	3
* 22	PAOZZ	5310005825965	80205	MS35338-44	WASHER,LOCK 1/4..... UOC:TTA,TT1,UUA,UU2	14
* 23	PAOZZ	5310000581305	19200	10910174-20	WASHER,FLAT 1/4..... UOC:TTA,TT1,UUA,UU2	14

(1) ITEM NO	(2) SMR CODE	(3) NSN	(4) CAGEC	(5) PART NUMBER	(6) DESCRIPTION AND USABLE ON CODES(UOC)	(7) QTY
* 24	PAOZZ	2540015548393	34623	6030845	ARMOR,PLATE..... UOC:TTA,TT1,UUA,UU2	1
* 25	PAOZZ	5340015360557	6W728	4660639-000	BRACKET,MOUNTING..... UOC:TTA,TT1,UUA,UU2	2
* 26	PAOZZ	5340014563917	6W728	4668988-000	BAND,RETAINING..... UOC:TTA,TT1,UUA,UU2	2
* 27	PAOZZ	5340015357729	6W728	6432550-200M1	BUMPER,RUBBER..... UOC:TTA,TT1,UUA,UU2	4
* 28	PAOZZ	9515015363333	6W728	6432286	PLATE,METAL BREATHER COVER..... UOC:TTA,TT1,UUA,UU2	1
* 29	PAOZZ	5305008465703	80204	B1821BH038C300N	SCREW,CAP,HEXAGON H 3/8-16 X 3.00.. UOC:TTA,TT1,UUA,UU2	6
* 30	PAOZZ	5325015634618	78276	ALS9B-616-312	INSERT,SCREW THREAD 3/8..... UOC:TTA,TT1,UUA,UU2	4
* 31	PAOZZ	5340015358780	6W728	6430718-200M1	BRACKET,ANGLE L.H..... UOC:TTA,TT1,UUA,UU2	1
* 32	MOOZZ		34623	6023082-11.25	TRIM,EDGE MAKE FROM EDGE PROTECTOR, P/N T-1350B2X1/4,11.25 INCHES LONG.. UOC:TTA,TT1,UUA,UU2	1
* 33	MOOZZ		34623	6023083-3.5	TRIM EDGE MAKE FROM EDGE PROTECTOR, P/N T-1350B2X1/4,3.5 INCHES LONG.... UOC:TTA,TT1,UUA,UU2	1
* 34	PAOZZ	2540015548545	34623	6030301	ARMOR,PLATE..... UOC:TTA,TT1,UUA,UU2	1
* 35	PAOZZ	5305000680509	80204	B1821BH025C125N	SCREW,CAP,HEXAGON H 1/4-20 X 1.25.. UOC:TTA,TT1,UUA,UU2	11
* 36	PAOZZ	9515015383499	6W728	6432438-200M1	ARMOR,PLATE LOWER..... UOC:TTA,TT1,UUA,UU2	1
* 37	PAOZZ	5310000045033	80205	MS35338-46	WASHER,LOCK 3/8..... UOC:TTA,TT1,UUA,UU2	3
* 38	PAOZZ	5305007813927	80204	B1821BH038C350N	SCREW,CAP,HEXAGON H 3/8-16 X 3.50.. UOC:TTA,TT1,UUA,UU2	3

END OF FIGURE

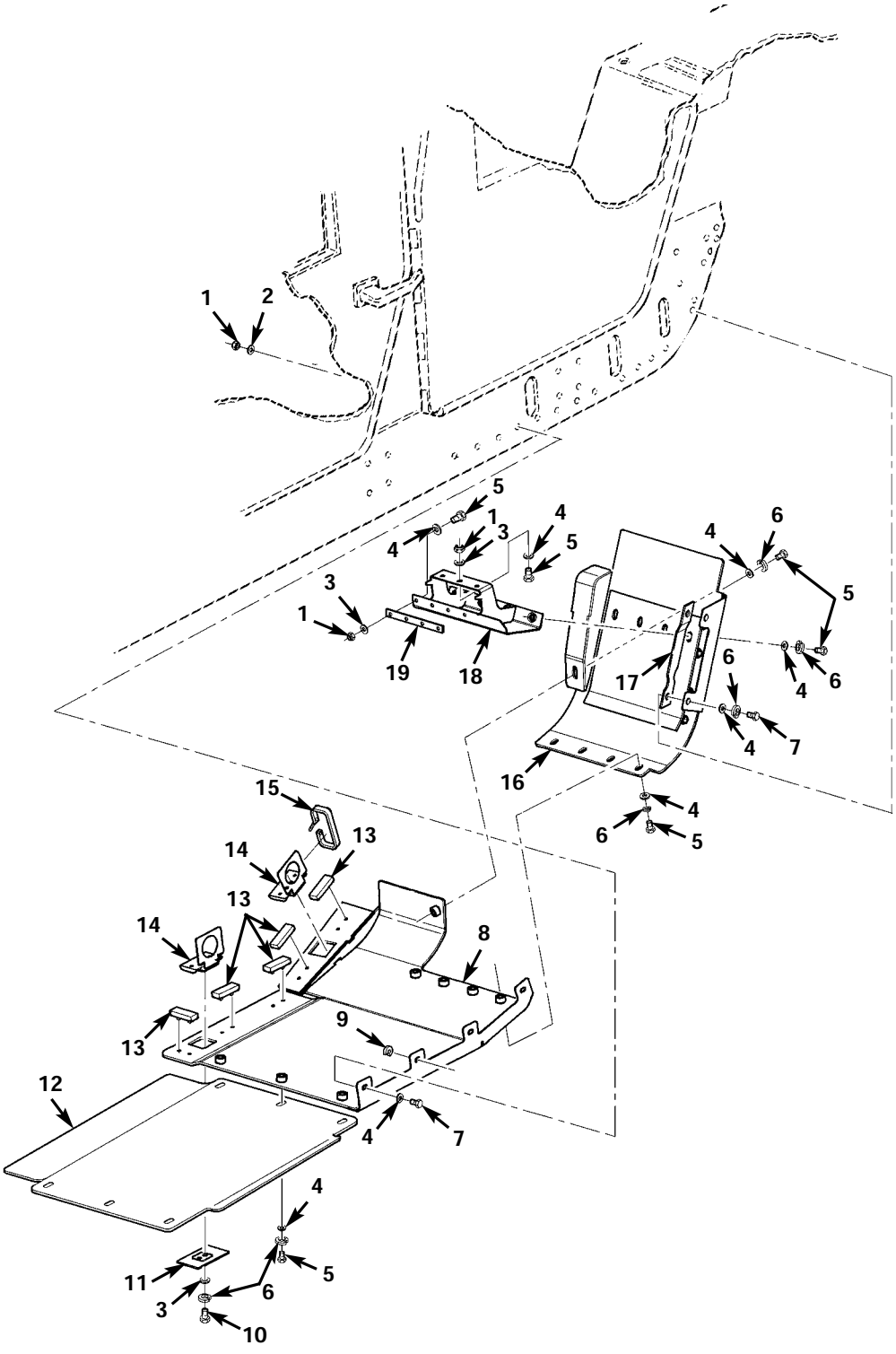

Figure 189K. Left Rear Underbody Enhanced IAP Armor (Serial Number 241954 and Above).

(1) ITEM NO	(2) SMR CODE	(3) NSN	(4) CAGEC	(5) PART NUMBER	(6) DESCRIPTION AND USABLE ON CODES(UOC)	(7) QTY
					GROUP 1801 BODY,CAB,HOOD,AND HULL ASSEMBLY	
					FIG. 189K LEFT REAR UNDERBODY ENHANCED IAP ARMOR(SERIAL NUMBER 241954 AND ABOVE)	
* 1	PAOZZ	5310009359021	96906	MS51943-35	NUT,SELF-LOCKING,HE 3/8-16..... UOC:TTA,TT1,UUA,UU2	11
* 2	PAOZZ	5310012866077	19207	12341856	WASHER,FLAT 3/8..... UOC:TTA,TT1,UUA,UU2	14
* 3	PAOZZ	5310014124013	24617	2436163	WASHER,FLAT 3/8..... UOC:TTA,TT1,UUA,UU2	11
* 4	PAOZZ	5310009871294	19200	10910174-16	WASHER,FLAT 3/8..... UOC:TTA,TT1,UUA,UU2	28
* 5	PAOZZ	5305000680511	80204	B1821BH038C125N	SCREW,CAP,HEXAGON H 3/8-16 X 1.25.. UOC:TTA,TT1,UUA,UU2	22
* 6	PAOZZ	5310006379541	65035	P49866-11	WASHER,LOCK 3/8..... UOC:TTA,TT1,UUA,UU2	22
* 7	PAOZZ	5305008213869	80204	B1821BH038C175N	SCREW,CAP,HEXAGON H 3/8-16 X 1.75.. UOC:TTA,TT1,UUA,UU2	6
* 8	PAOZZ	9515015363375	6W728	6432310	PLATE,METAL L.H..... UOC:TTA,TT1,UUA,UU2	1
* 9	PAOZZ		34623	6030828	SPACER 1/2 INCH THICK..... UOC:TTA,TT1,UUA,UU2	4
* 10	PAOZZ	5305002693238	80204	B1821BH038F100N	SCREW,CAP,HEXAGON H 3/8-24 X 1.00.. UOC:TTA,TT1,UUA,UU2	4
* 11	PAOZZ	5340015603953	6W728	6432495-01M1	PLATE,MOUNTING..... UOC:TTA,TT1,UUA,UU2	2
* 12	PAOZZ	9515015361111	6W728	6432591	PLATE,METAL..... UOC:TTA,TT1,UUA,UU2	1
* 13	PAOZZ	5340015357729	6W728	6432550-200M1	BUMPER,RUBBER..... UOC:TTA,TT1,UUA,UU2	5
* 14	PAOZZ	5340015360557	6W728	4660639	BRACKET,MOUNTING..... UOC:TTA,TT1,UUA,UU2	2
* 15	PAOZZ	5340014563917	6W728	4668988	BAND,RETAINING..... UOC:TTA,TT1,UUA,UU2	2
* 16	PAOZZ	9515015360617	6W728	6432600	PLATE,METAL..... UOC:TTA,TT1,UUA,UU2	1
* 17	PAOZZ		34623	6034710	BRACKET,VEHICULAR C..... UOC:TTA,TT1,UUA,UU2	1
* 18	PAOZZ	5340015358707	6W728	6432565-200M1	BRACKET,MOUNTING..... UOC:TTA,TT1,UUA,UU2	1
* 19	PAOZZ	5340015248543	6W728	4660680-002	BRACKET,ANGLE..... UOC:TTA,TT1,UUA,UU2	1

END OF FIGURE

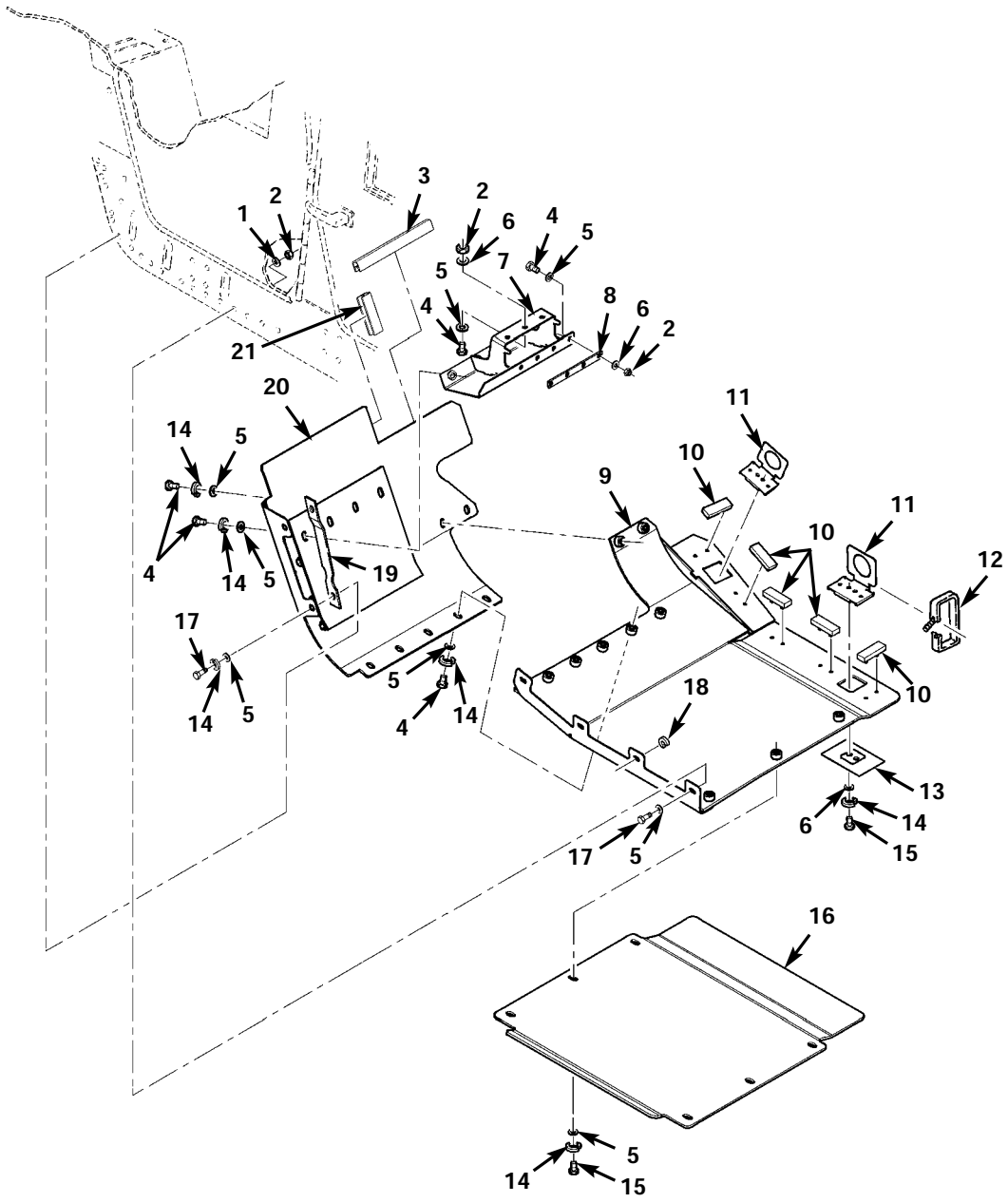

Figure 189L. Right Rear Underbody Enhanced IAP Armor (Serial Number 241954 and Above).

(1) ITEM NO	(2) SMR CODE	(3) NSN	(4) CAGEC	(5) PART NUMBER	(6) DESCRIPTION AND USABLE ON CODES(UOC)	(7) QTY
					GROUP 1801 BODY,CAB,HOOD,AND HULL ASSEMBLY	
					FIG. 189L RIGHT REAR UNDERBODY ENHANCED IAP ARMOR(SERIAL MUMBER 241954 AND ABOVE)	
* 1	PAOZZ	5310012866077	19207	12341856	WASHER,FLAT 3/8..... UOC:TTA,TT1,UUA,UU2	4
* 2	PAOZZ	5310009359021	96906	MS51943-35	NUT,SELF-LOCKING,HE 3/8-16..... UOC:TTA,TT1,UUA,UU2	11
* 3	MOOZZ		34623	6023082-11.25	TRIM,EDGE MAKE FROM EDGE PROTECTOR, P/N T-1350B2X1/4,11.25 INCHES LONG.. UOC:TTA,TT1,UUA,UU2	1
* 4	PAOZZ	5305000680511	80204	B1821BH038C125N	SCREW,CAP,HEXAGON H 3/8-16 X 1.25.. UOC:TTA,TT1,UUA,UU2	28
* 5	PAOZZ	5310009871294	19200	10910174-16	WASHER,FLAT 3/8..... UOC:TTA,TT1,UUA,UU2	30
* 6	PAOZZ	5310014124013	24617	2436163	WASHER,FLAT 3/8..... UOC:TTA,TT1,UUA,UU2	11
* 7	PAOZZ	5340015364636	6W728	6432564-200M1	BRACKET,MOUNTING..... UOC:TTA,TT1,UUA,UU2	1
* 8	PAOZZ	5340015249543	6W728	4660680-002	BRACKET,ANGLE..... UOC:TTA,TT1,UUA,UU2	1
* 9	PAOZZ	9515015361262	6W728	6432309	PLATE,METAL..... UOC:TTA,TT1,UUA,UU2	1
* 10	PAOZZ	5340015357729	6W728	6432550-200M1	BUMPER,RUBBER..... UOC:TTA,TT1,UUA,UU2	5
* 11	PAOZZ	5340015360557	6W728	4660639	BRACKET,MOUNTING..... UOC:TTA,TT1,UUA,UU2	2
* 12	PAOZZ	5340014563917	6W728	4668988	BAND,RETAINING..... UOC:TTA,TT1,UUA,UU2	2
* 13	PAOZZ	5340015603953	6W728	6432495-01M1	PLATE,MOUNTING..... UOC:TTA,TT1,UUA,UU2	2
* 14	PAOZZ	5310006379541	65035	P49866-11	WASHER,LOCK 3/8..... UOC:TTA,TT1,UUA,UU2	23
* 15	PAOZZ	5305000680511	80204	B1821BH038C125N	SCREW,CAP,HEXAGON H 3/8-16 X 1.25.. UOC:TTA,TT1,UUA,UU2	10
* 16	PAOZZ	9515015361111	6W728	6432591	PLATE,METAL..... UOC:TTA,TT1,UUA,UU2	1
* 17	PAOZZ	5305008213869	80204	B1821BH038C175N	SCREW,CAP,HEXAGON H 3/8-16 X 1.75.. UOC:TTA,TT1,UUA,UU2	6
* 18	PAOZZ		34623	6030828	SPACER 1/2 INCH THICK..... UOC:TTA,TT1,UUA,UU2	4
* 19	PAOZZ		34623	6034710	BRACKET,VEHICULAR C..... UOC:TTA,TT1,UUA,UU2	1
* 20	PAOZZ	9515015360622	6W728	6432599	PLATE,METAL..... UOC:TTA,TT1,UUA,UU2	1
* 21	MOOZZ		34623	6023083-3.5	TRIM EDGE MAKE FROM EDGE PROTECTOR, P/N T-1350B2X1/4,3.5 INCHES LONG.... UOC:TTA,TT1,UUA,UU2	1

END OF FIGURE

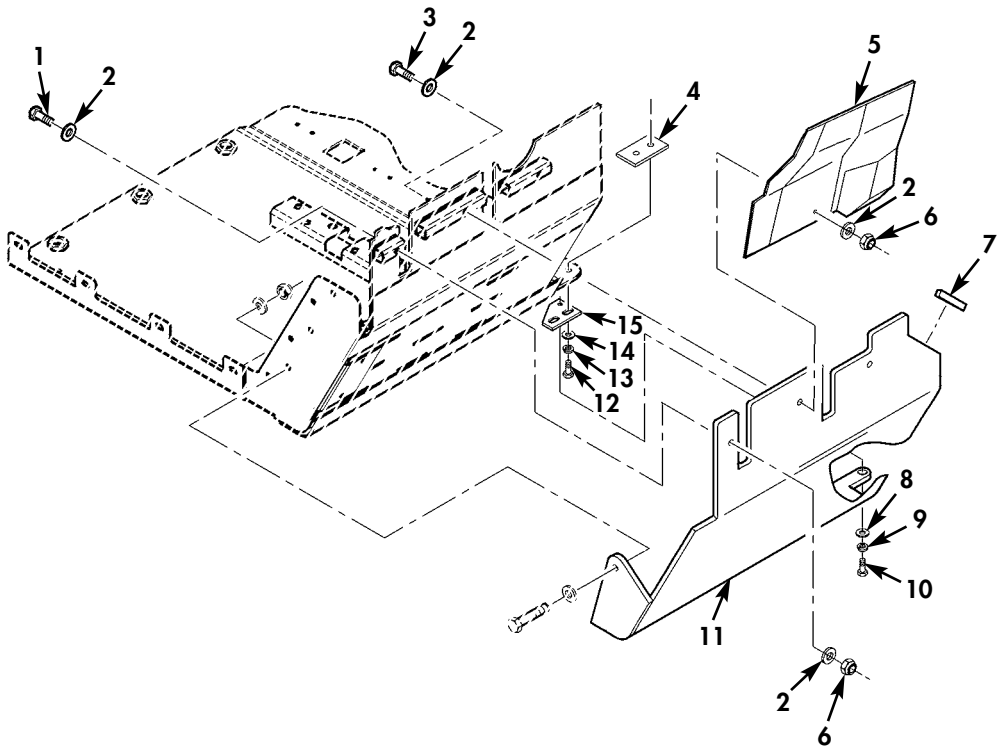

Figure 189M. Frag 2 Right Front Underbody.

(1) ITEM NO	(2) SMR CODE	(3) NSN	(4) CAGEC	(5) PART NUMBER	(6) DESCRIPTION AND USABLE ON CODES(UOC)	(7) QTY
					GROUP 1801 BODY,CAB,HOOD,AND HULL ASSEMBLY	
					FIG. 189M FRAG 2 RIGHT FRONT UNDERBODY	
* 1	PAOZZ	5305007813928	80204	B1821BH038C400N	SCREW,CAP,HEXAGON H 3/8-16 X 4.00.. UOC:TTA,TT1,UUA,UU2	2
* 2	PAOZZ	5310009871294	19200	10910174-16	WASHER,FLAT 3/8..... UOC:TTA,TT1,UUA,UU2	6
* 3	PAOZZ	5305008080864	80204	B1821BH038C325N	SCREW,CAP,HEXAGON H 3/8-16 X 3.25.. UOC:TTA,TT1,UUA,UU2	1
* 4	PAOZZ	5340015548744	34623	6030053	PLATE,MOUNTING..... UOC:TTA,TT1,UUA,UU2	1
* 5	PAOZZ		34623	6034177	PLATE,METAL AIR CLEANER SHIELD..... UOC:TTA,TT1,UUA,UU2	1
* 6	PAOZZ	5310009359021	96906	MS51943-35	NUT,SELF-LOCKING,HE 3/8-16..... UOC:TTA,TT1,UUA,UU2	3
* 7	MOOZZ		34623	6029020-3	TRIM EDGE MAKE FROM EDGE PROTECTOR 6027320 3,INCHES LONG..... UOC:TTA,TT1,UUA,UU2	1
* 8	PAOZZ	5310012866077	19207	12341856	WASHER,FLAT 3/8..... UOC:TTA,TT1,UUA,UU2	2
* 9	PAOZZ	5310006379541	65035	P49866-11	WASHER,LOCK 3/8..... UOC:TTA,TT1,UUA,UU2	1
* 10	PAOZZ	5305005432419	80204	B1821BH038C113N	SCREW,CAP,HEXAGON H 3/8-16 X 1.125. UOC:TTA,TT1,UUA,UU2	1
* 11	PAOZZ	2540015548543	34623	6034244	ARMOR,PLATE..... UOC:TTA,TT1,UUA,UU2	1
* 12	PAOZZ	5306002264828	80204	B1821BH031C113N	BOLT,MACHINE 5/16-18 X 1.125..... UOC:TTA,TT1,UUA,UU2	2
* 13	PAOZZ	5310004079566	80205	MS35338-45	WASHER,LOCK 5/16..... UOC:TTA,TT1,UUA,UU2	2
* 14	PAOZZ	5310011191024	24617	2436162	WASHER,FLAT 5/16..... UOC:TTA,TT1,UUA,UU2	2
* 15	PAOZZ	5340015546683	34623	6033438	PLATE,MOUNTING..... UOC:TTA,TT1,UUA,UU2	1

END OF FIGURE

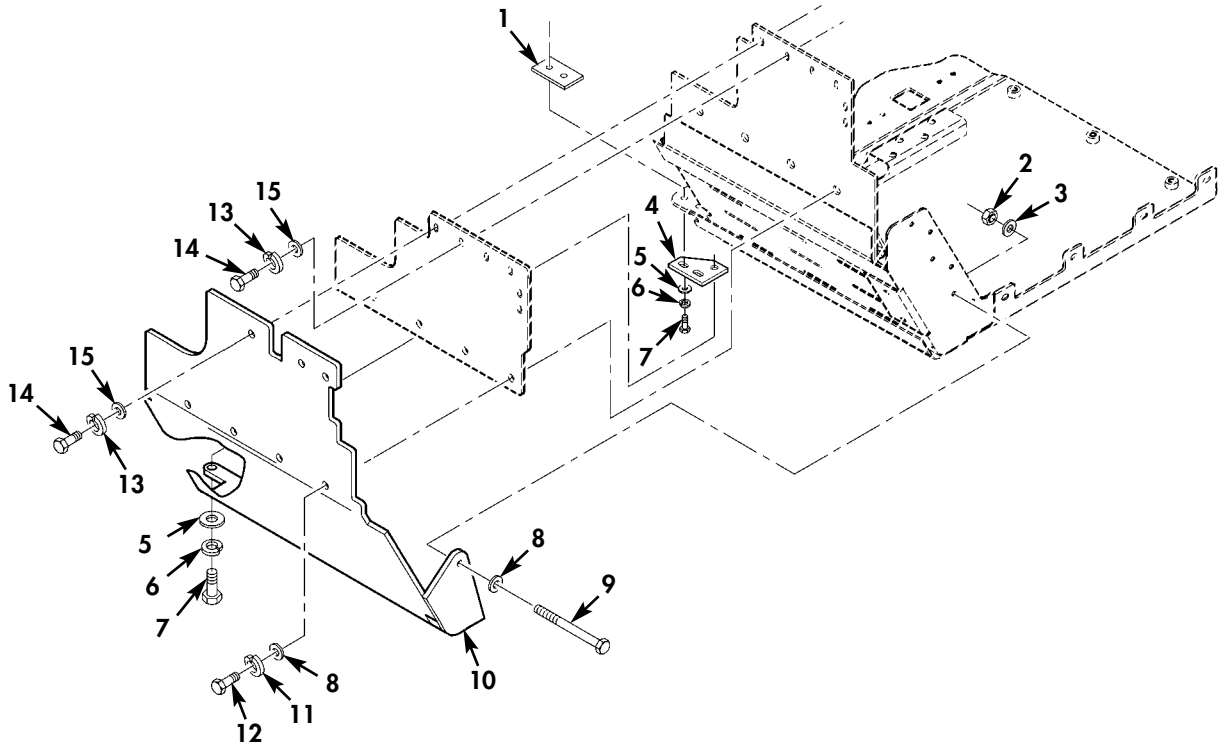

Figure 189N. Frag 2 Left Front Underbody.

(1) ITEM NO	(2) SMR CODE	(3) NSN	(4) CAGEC	(5) PART NUMBER	(6) DESCRIPTION AND USABLE ON CODES(UOC)	(7) QTY
					GROUP 1801 BODY,CAB,HOOD,AND HULL ASSEMBLY	
					FIG. 189N FRAG 2 LEFT FRONT UNDERBODY	
* 1	PAOZZ	5340015548744	34623	6030053	PLATE,MOUNTING..... UOC:TTA,TT1,UUA,UU2	1
* 2	PAOZZ	5310009359021	96906	MS51943-35	NUT,SELF-LOCKING,HE 3/8-16..... UOC:TTA,TT1,UUA,UU2	1
* 3	PAOZZ	5310012866077	19207	12341856	WASHER,FLAT 3/8..... UOC:TTA,TT1,UUA,UU2	1
* 4	PAOZZ	5340015546683	34623	6033438	PLATE,MOUNTING..... UOC:TTA,TT1,UUA,UU2	1
* 5	PAOZZ	5310009643415	19207	10910174-19	WASHER,FLAT 5/16..... UOC:TTA,TT1,UUA,UU2	2
* 6	PAOZZ	5310004079566	80205	MS35338-45	WASHER,LOCK 5/16..... UOC:TTA,TT1,UUA,UU2	2
* 7	PAOZZ	5306002264828	80204	B1821BH031C125N	BOLT,MACHINE 5/16-18 X 1.125..... UOC:TTA,TT1,UUA,UU2	3
* 8	PAOZZ	5310009871294	19200	10910174-16	WASHER,FLAT 3/8..... UOC:TTA,TT1,UUA,UU2	5
* 9	PAOZZ	5305008080864	80204	B1821BH038C325N	SCREW,CAP,HEXAGON H 3/8-16 X 3.25.. UOC:TTA,TT1,UUA,UU2	1
* 10	PAOZZ	2540015548350	34623	6034243	ARMOR,PLATE..... UOC:TTA,TT1,UUA,UU2	1
* 11	PAOZZ	5310000045033	80205	MS35338-46	WASHER,LOCK 3/8..... UOC:TTA,TT1,UUA,UU2	4
* 12	PAOZZ	5305008213869	80204	B1821BH038C175N	SCREW,CAP,HEXAGON H 3/8-16 X 1.75.. UOC:TTA,TT1,UUA,UU2	4
* 13	PAOZZ	5310005825965	80205	MS35338-44	WASHER,LOCK 1/4..... UOC:TTA,TT1,UUA,UU2	4
* 14	PAOZZ	5305002253841	80204	B1821BH025C138N	SCREW,CAP,HEXAGON H 1/4-20 X 1.375. UOC:TTA,TT1,UUA,UU2	4
* 15	PAOZZ	5310000581305	19200	10910174-20	WASHER,FLAT 1/4..... UOC:TTA,TT1,UUA,UU2	4

END OF FIGURE

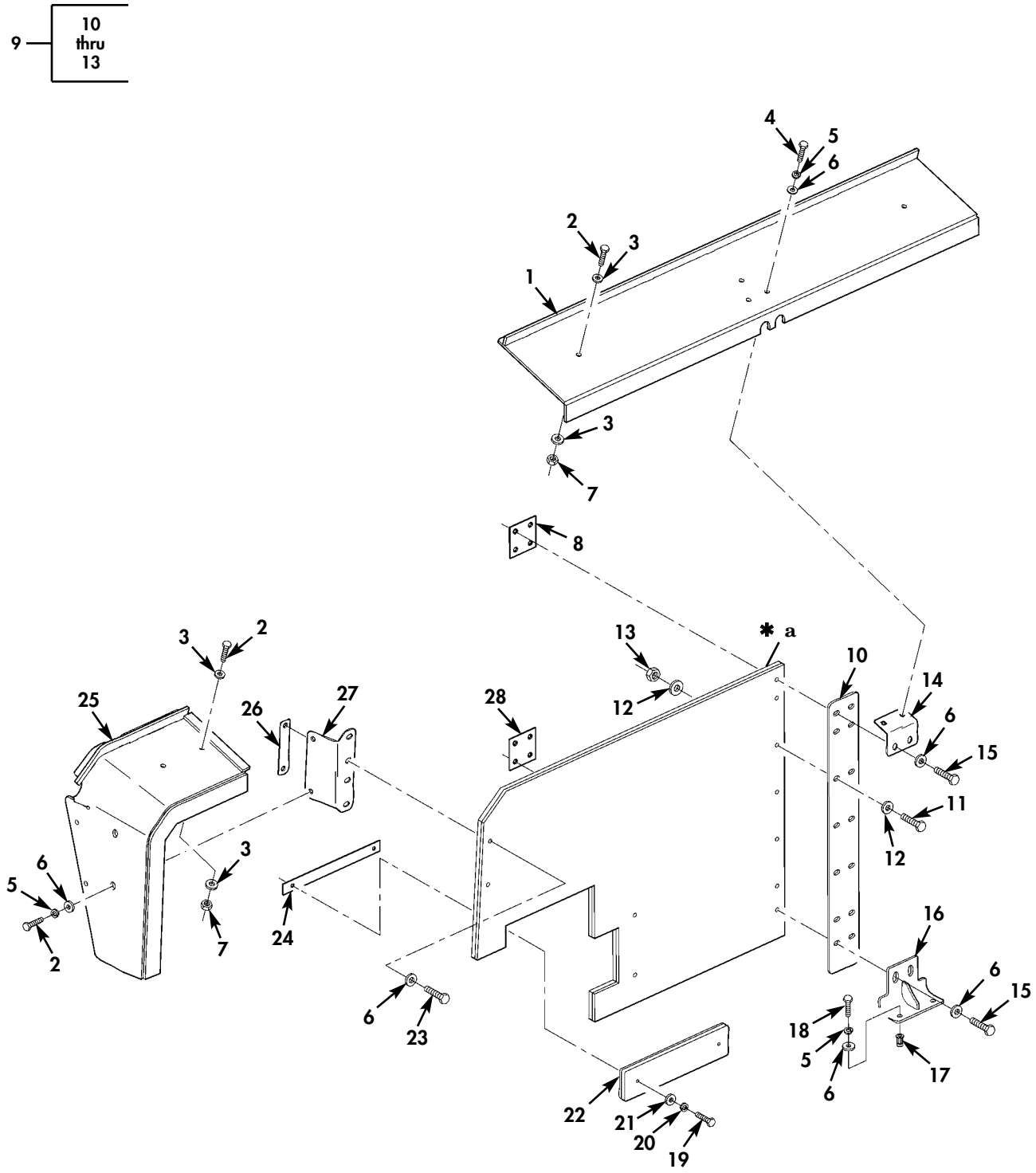

✱ QUANTITY SHOWN REFLECTS ONE SIDE

✱ **a** PART OF ITEM 9

Figure 189O. C-Partition Perimeter Armor.

(1) ITEM NO	(2) SMR CODE	(3) NSN	(4) CAGEC	(5) PART NUMBER	(6) DESCRIPTION AND USABLE ON CODES(UOC)	(7) QTY
					GROUP 1801 BODY,CAB,HOOD,AND HULL ASSEMBLY	
					FIG. 189O C-PARTITION PERIMETER ARMOR	
* 1	PAOZZ		6W728	6434960-200M1	ARMOR,SUPPLEMENTAL C-PILLAR,CENTER.. UOC:UU2	1
* 2	PAOZZ	5305007252317	80204	B1821BH038C150N	SCREW,CAP,HEXAGON H 3/8-16 X 1.50... UOC:UU2	7
* 3	PAOZZ	5310008775972	19200	10910174-3	WASHER,FLAT 3/8..... UOC:UU2	10
* 4	PAOZZ	5305006882111	80204	B1821BH038C138N	SCREW,CAP,HEXAGON H 3/8-16 X 1.375.. UOC:UU2	2
* 5	PAOZZ	5310006379541	65035	P49866-11	WASHER,LOCK 3/8..... UOC:UU2	6
* 6	PAOZZ	5310009871294	19200	10910174-16	WASHER,FLAT 3/8..... UOC:UU2	10
* 7	PAOZZ	5310009359021	96906	MS51943-35	NUT,SELF-LOCKING,HE 3/8-16..... UOC:UU2	5
* 8	PAOZZ		6W728	6435032-200M1	PLATE,METAL..... UOC:UU2	1
* 9	PAOOO		6W728	6434950-200M1	PLATE,METAL C-PARTITION..... UOC:UU2	1
* 10	PAOZZ		6W728	6434121-200M1	.PLATE,METAL..... UOC:UU2	1
* 11	PAOZZ	5305007829489	80204	B1821BH038C200N	.SCREW,CAP,HEXAGON H 3/8-16 X 2.00.. UOC:UU2	10
* 12	PAOZZ	5310009871294	19200	10910174-16	.WASHER,FLAT 3/8..... UOC:UU2	20
* 13	PAOZZ	5310009359021	96906	MS51943-35	.NUT,SELF-LOCKING,HE 3/8-16..... UOC:UU2	10
* 14	PAOZZ		6W728	6434139-200M1	BRACKET,VEHICULAR C **C-PARTITION,** UPPER..... UOC:UU2	1
* 15	PAOZZ	5305006388920	80204	B1821BH038C225N	SCREW,CAP,HEXAGON H 3/8-16 X 2.25... UOC:UU2	4
* 16	PAOZZ		6W728	6434959-200M1	BRACKET,VEHICULAR C..... UOC:UU2	1
* 17	PAOZZ	5325014749732	78276	ALS7-616-150	INSERT,SCREW THREAD 3/8-16..... UOC:UU2	2
* 18	PAOZZ	5305000680511	80204	B1821BH038C125N	SCREW,CAP,HEXAGON H 3/8-16 X 1.25... UOC:UU2	2
* 19	PAOZZ	5305000712512	80204	B1821BH025C225N	SCREW,CAP,HEXAGON H 1/4-20 X 2.25... UOC:UU2	2
* 20	PAOZZ	5310005825965	80205	MS35338-44	WASHER,LOCK 1/4..... UOC:UU2	2
* 21	PAOZZ	5310000581305	19200	10910174-20	WASHER,FLAT 1/4..... UOC:UU2	2
* 22	PAOZZ		6W728	6434955-200M1	PLATE,METAL..... UOC:UU2	1
* 23	PAOZZ	5305008213869	80204	B1821BH038C175N	SCREW,CAP,HEXAGON H 3/8-16 X 1.75... UOC:UU2	2

(1) ITEM NO	(2) SMR CODE	(3) NSN	(4) CAGEC	(5) PART NUMBER	(6) DESCRIPTION AND USABLE ON CODES(UOC)	(7) QTY
* 24	PAOZZ		6W728	6434958-200M1	PLATE,MOUNTING..... UOC:UU2	1
* 25	PAOZZ		6W728	6433433-200M1	ARMOR,C-PILLAR L.H.,UPPER..... UOC:UU2	1
* 25	PAOZZ		6W728	6433436-200M1	ARMOR,C-PILLAR R.H.,UPPER..... UOC:UU2	1
* 26	PAOZZ		6W728	6435033-200M1	PLATE,MOUNTING..... UOC:UU2	1
* 27	PAOZZ		6W728	6433435-200M1	BRACKET,MOUNTING..... UOC:UU2	1
* 28	PAOZZ		6W728	6435031-200M1	PLATE ASSY,ARMOR..... UOC:UU2	1

END OF FIGURE

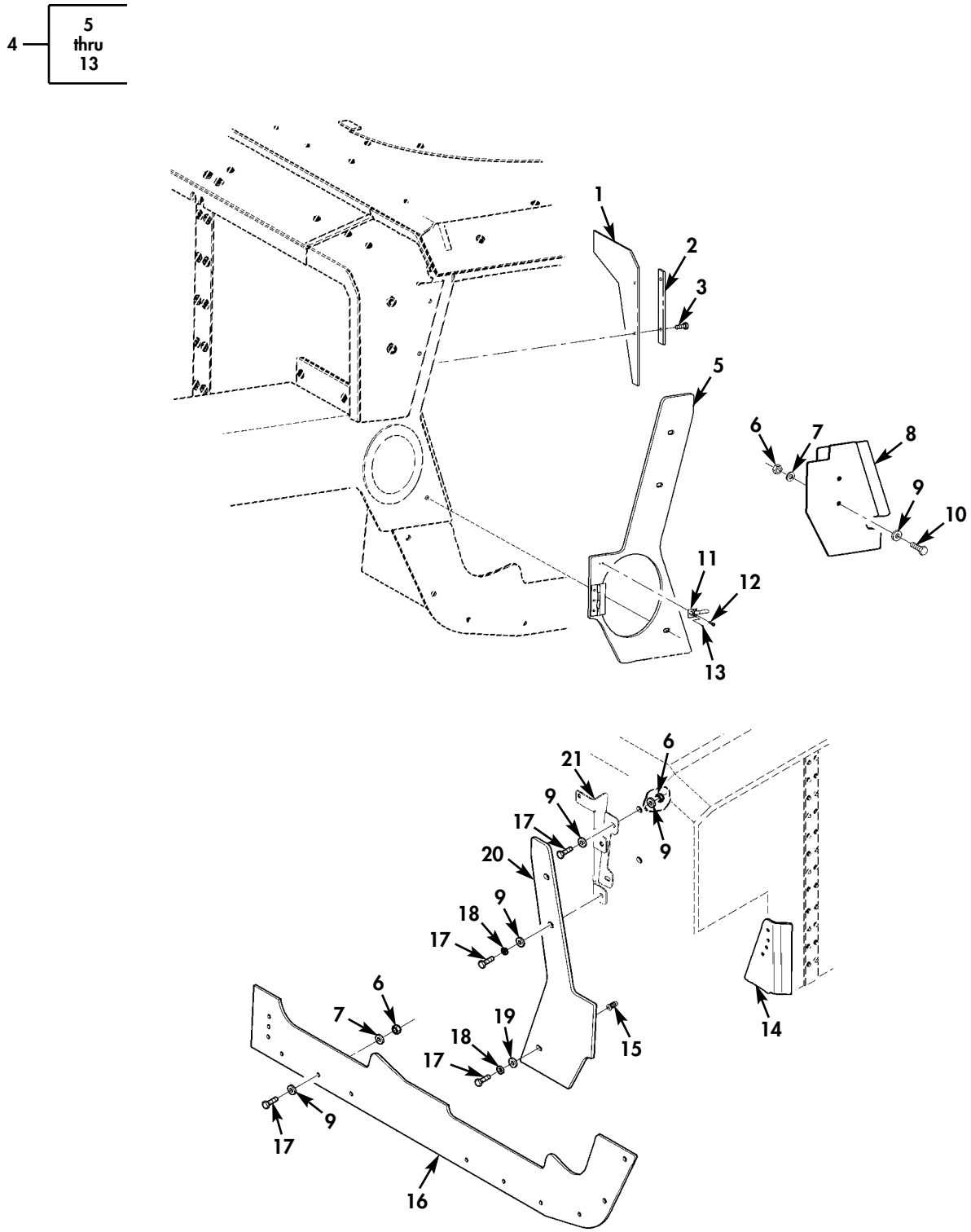

Figure 189P. Rocker Cover, C-Pillar Armor, Fuel Filler Cover, and Related Hardware.

(1) ITEM NO	(2) SMR CODE	(3) NSN	(4) CAGEC	(5) PART NUMBER	(6) DESCRIPTION AND USABLE ON CODES(UOC)	(7) QTY
					GROUP 1801 BODY,CAB,HOOD,AND HULL ASSEMBLY	
					FIG. 189P ROCKER COVER,C-PILLAR ARMOR,FUEL FILLER COVER,AND RELATED HARDWARE	
* 1	PAOZZ		34623	6023685	INSULATION,ACCOUSTI..... UOC:TTA,TT1,UUA,UU2	1
* 2	PAOZZ		34623	6024128	RETAINER STRIP..... UOC:TTA,TT1,UUA,UU2	1
* 3	PAOZZ	5305012079311	96906	MS51851-69	SCREW,TAPPING..... UOC:TTA,TT1,UUA,UU2	2
* 4	PAOOO	2540015548387	34623	6032588	ARMOR,PLATE..... UOC:TTA,TT1,UUA,UU2	1
* 5	PAOZZ		34623	6032532	.ARMOR,PLATE..... UOC:TTA,TT1,UUA,UU2	1
* 6	PAOZZ	5310009359021	96906	MS51943-35	.NUT,SELF-LOCKING,HE 3/8-16..... UOC:TTA,TT1,UUA,UU2	15
* 7	PAOZZ	5310012866077	19207	12341856	.WASHER,FLAT 3/8..... UOC:TTA,TT1,UUA,UU2	15
* 8	PAOZZ		34623	6038477	.ARMOR,PLATE FUEL FILLER COVER..... UOC:TTA,TT1,UUA,UU2	1
* 9	PAOZZ	5310009871294	19200	10910174-16	.WASHER,FLAT 3/8..... UOC:TTA,TT1,UUA,UU2	15
* 10	PAOZZ	5305006882111	80204	B1821BH038C138N	.SCREW,CAP,HEXAGON H 3/8-16 X 1.375 UOC:TTA,TT1,UUA,UU2	2
* 11	PAOZZ	5305001753230	80205	MS21318-14	.SCREW,DRIVE..... UOC:TTA,TT1,UUA,UU2	1
* 12	PAOZZ	5340012715866	19207	12341798	.CLIP,SPRING TENSION..... UOC:TTA,TT1,UUA,UU2	1
* 13	PAOZZ	5305009846210	96906	MS35206-263	.SCREW,MACHINE..... UOC:TTA,TT1,UUA,UU2	1
* 14	PAOZZ		6W728	6433434-200M1	PLATE,METAL WHEELHOUSE,L.H..... UOC:TTA,TT1,UUA,UU2	1
* 14	PAOZZ		6W728	6433862-200M1	PLATE,METAL WHEELHOUSE,R.H..... UOC:TTA,TT1,UUA,UU2	1
* 15	PAOZZ	5325014704625	34623	6001247	INSERT,SCREW THREAD 3/8-16..... UOC:TTA,TT1,UUA,UU2	1
* 16	PAOZZ	2540015547188	34623	6030911	ARMOR,PLATE L.H..... UOC:TTA,TT1,UUA,UU2	1
* 16	PAOZZ	2540015548458	34623	6030912	ARMOR,PLATE R.H..... UOC:TTA,TT1,UUA,UU2	1
* 17	PAOZZ	5305008213869	80204	B1821BH038C175N	SCREW,CAP,HEXAGON H 3/8-16 X 1.75.. UOC:TTA,TT1,UUA,UU2	14
* 18	PAOZZ	5310006379541	65035	P49866-11	WASHER,LOCK 3/8..... UOC:TTA,TT1,UUA,UU2	6
* 19	PAOZZ	5310008775972	19200	10910174-3	WASHER,FLAT 3/8..... UOC:TTA,TT1,UUA,UU2	2
* 20	PAOZZ	2540015548541	34623	6032531	ARMOR,PLATE L.H..... UOC:TTA,TT1,UUA,UU2	1
* 20	PAOZZ	2540015546770	34623	6030343	ARMOR,PLATE R.H..... UOC:TTA,TT1,UUA,UU2	1

(1) ITEM NO	(2) SMR CODE	(3) NSN	(4) CAGEC	(5) PART NUMBER	(6) DESCRIPTION AND USABLE ON CODES(UOC)	(7) QTY
* 21	PAOZZ	5340015358280	6W728	6432625-200M1	BRACKET,MOUNTING GAP,R.H..... UOC:TTA,TT1,UUA,UU2	1
* 21	PAOZZ	5340015360547	6W728	6432658-200M1	BRACKET,MOUNTING GAP,L.H..... UOC:TTA,TT1,UUA,UU2	1

END OF FIGURE

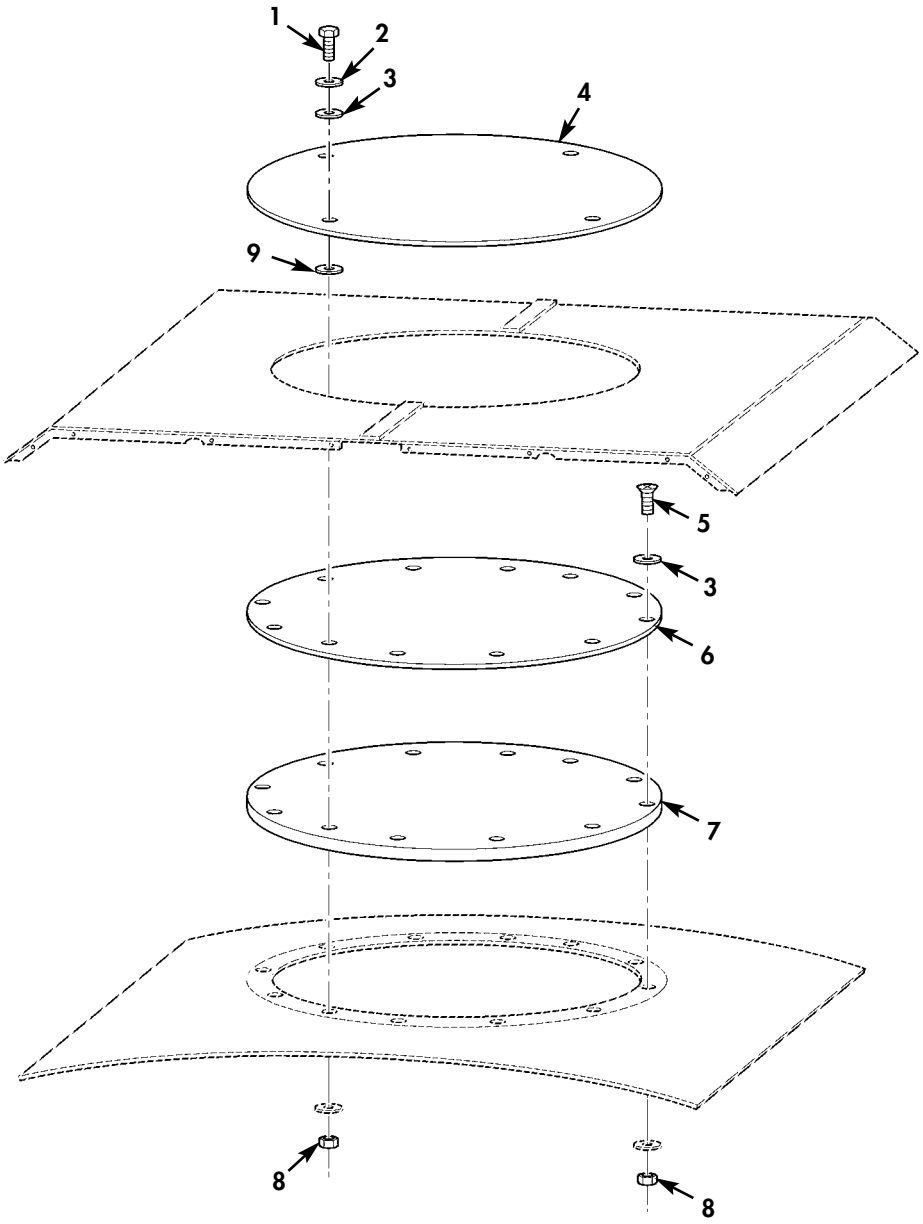

Figure 189Q. Turret Cover Armor.

(1) ITEM NO	(2) SMR CODE	(3) NSN	(4) CAGEC	(5) PART NUMBER	(6) DESCRIPTION AND USABLE ON CODES(UOC)	(7) QTY
					GROUP 1801 BODY,CAB,HOOD,AND HULL ASSEMBLY	
					FIG. 189Q TURRET COVER ARMOR	
* 1	PAOZZ	5305006882111	80204	B1821BH038C138N	SCREW,CAP,HEXAGON H 3/8-16 X 1.375.. UOC:UU2	4
* 2	PAOZZ	5310011300517	24617	2436163	WASHER,FLAT 3/8..... UOC:UU2	4
* 3	PAOZZ	5310015484856	34623	6019898	WASHER,SEAL..... UOC:UU2	12
* 4	PAOZZ		6W728	6433867-200M1	COVER,ACCESS..... UOC:UU2	1
* 5	PAOZZ	5305000816729	96906	MS24667-53	SCREW,CAP,SOCKET HE 3/8-16 X 1.25... UOC:UU2	8
* 6	PAOZZ		34623	6023735	PLATE,METAL..... UOC:UU2	1
* 7	PAOZZ		34623	6037075	INSULATION,THERMAL..... UOC:UU2	1
* 8	PAOZZ	5310009359021	96906	MS51943-35	NUT,SELF-LOCKING,HE 3/8-16..... UOC:UU2	12
* 9	PAOZZ		34623	6001595	GASKET,FOAM WASHER..... UOC:UU2	4

END OF FIGURE

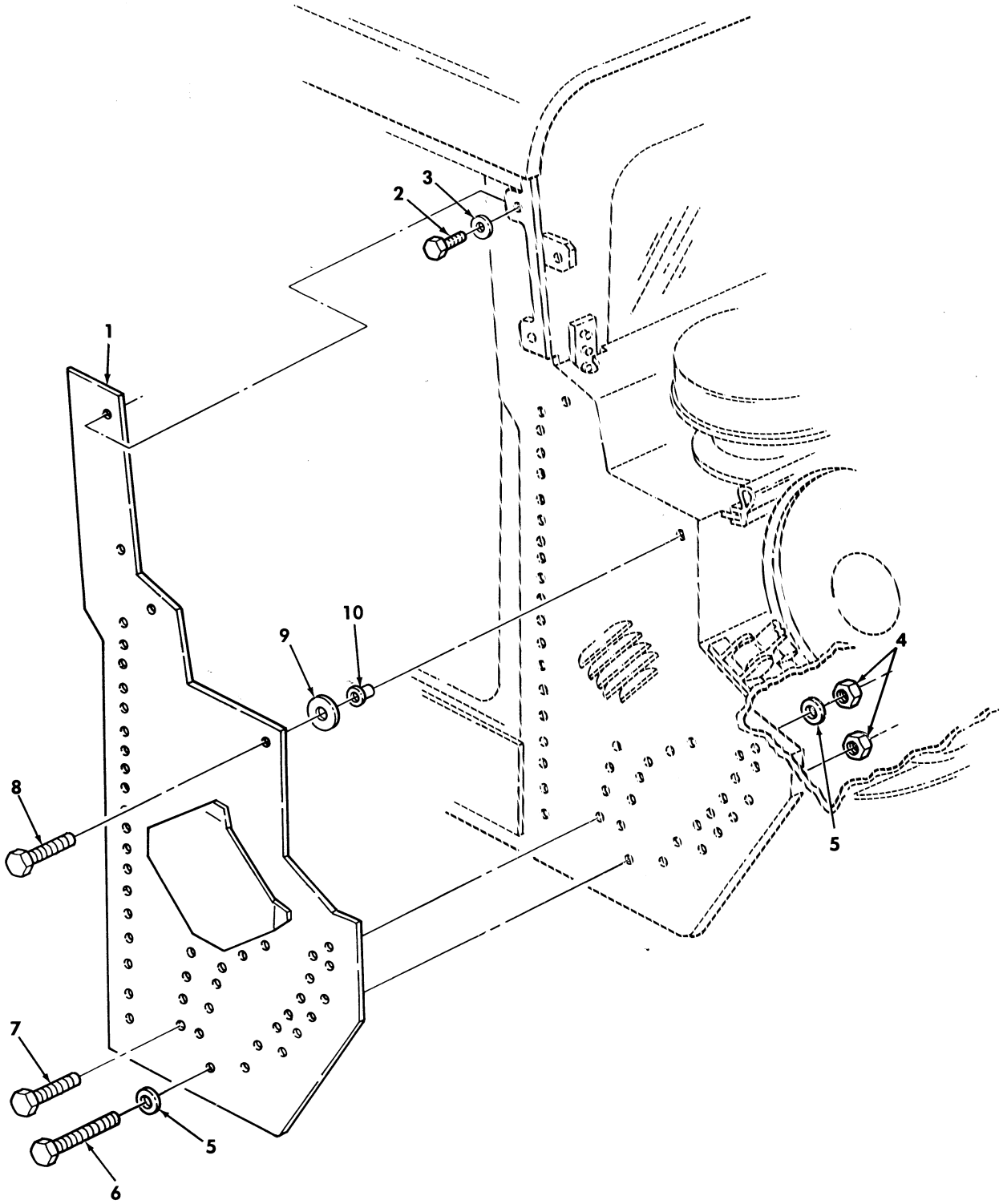

Figure 190. Passenger Side A-Pillar Armor and Mounting Hardware.

(1) ITEM NO	(2) SMR CODE	(3) NSN	(4) CAGEC	(5) PART NUMBER	(6) DESCRIPTION AND USABLE ON CODES(UOC)	(7) QTY
					GROUP 1801 BODY,CAB,HOOD,AND HULL ASSEMBLY	
					FIG. 190 PASSENGER SIDE A-PILLAR ARMOR AND MOUNTING HARDWARE	
1	PBOZZ	2540014360720	6W728	4660922	ARMOR,SUPPLEMENTAL..... UOC:XBB	1
* 2	PAOZZ	5305000680511	80204	B1821BH038C125N	SCREW,CAP HEXAGON H .375-16 X 1.25. UOC:XBB	2
3	PAOZZ	5310014363742	6W728	4397005-015	WASHER,FLAT .438..... UOC:XBB	23
4	PAOZZ	5310014398177	6W728	4397064-005	NUT,SELF-LOCKING,HE .375-16..... UOC:XBB	23
5	PAOZZ	5310014398181	6W728	4397083-001	WASHER,FLAT .387..... UOC:XBB	25
* 6	PAOZZ	5305007252317	80204	B1821BH038C150N	SCREW,CAP,HEXAGON H .375-16 X 1.50. UOC:XBB	14
* 7	PAOZZ	5306014339197	6W728	4397000-062	BOLT,MACHINE .375-16 X 1.25..... UOC:XBB	10
8	PAOZZ	5306014376309	6W728	4397010-006	BOLT,MACHINE .250-20 X .750..... UOC:XBB	1
9	PAOZZ	5310014398181	6W728	4397083-001	WASHER,FLAT..... UOC:XBB	1
10	PAOZZ	5325013942414	78276	ALS7-420-165	INSERT,SCREW THREAD .250-20..... UOC:XBB	1

END OF FIGURE

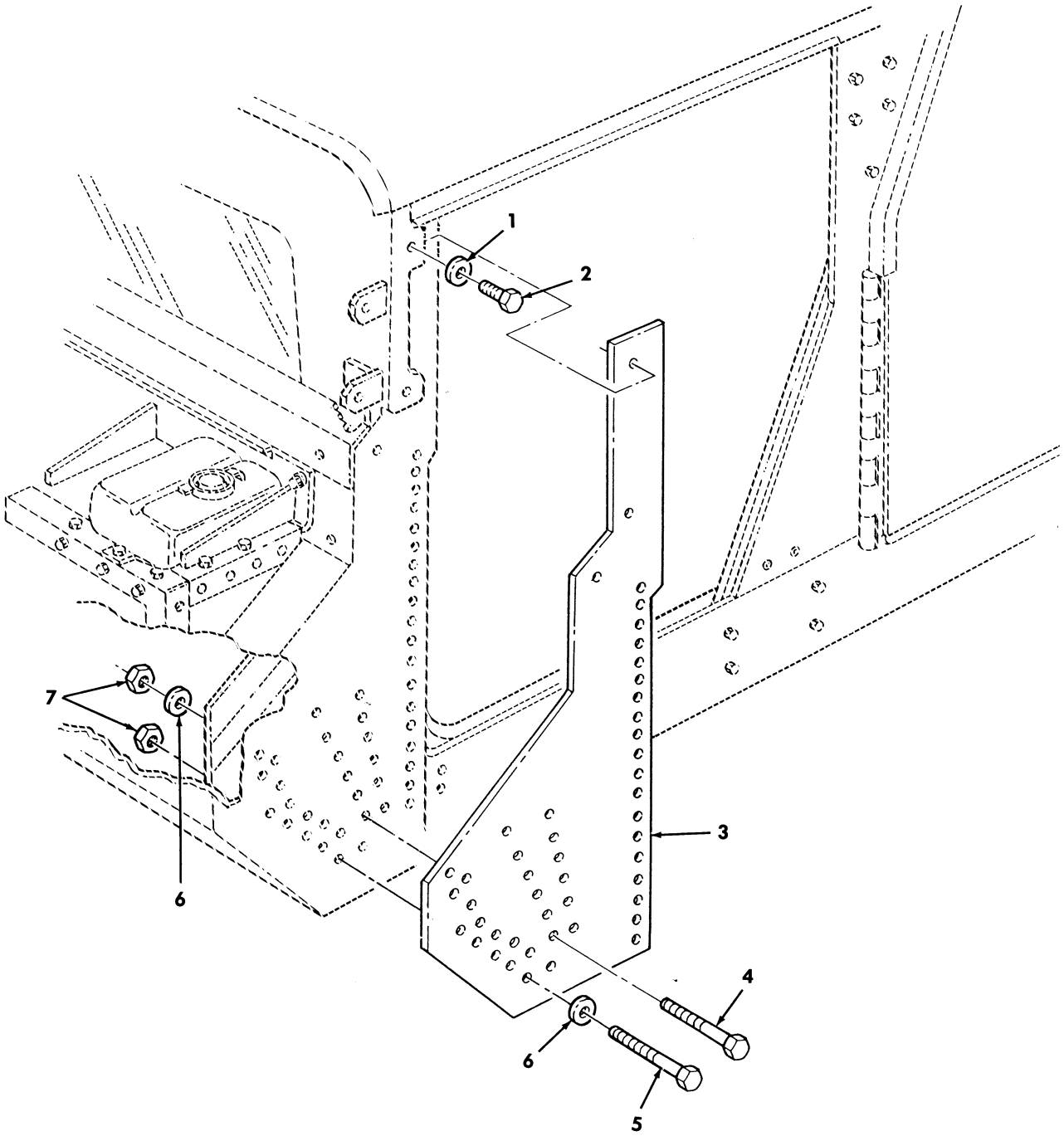

Figure 191. Driver Side A-Pillar Armor and Mounting Hardware.

(1) ITEM NO	(2) SMR CODE	(3) NSN	(4) CAGEC	(5) PART NUMBER	(6) DESCRIPTION AND USABLE ON CODES(UOC)	(7) QTY
					GROUP 1801 BODY,CAB,HOOD,AND HULL ASSEMBLY	
					FIG. 191 DRIVER SIDE A-PILLAR ARMOR AND MOUNTING HARDWARE	
1	PAOZZ	5310014363742	6W728	4397005-015	WASHER,FLAT .438..... UOC:XBB	2
* 2	PAOZZ	5305000680511	80204	B1821BH038C125N	SCREW,CAP HEXAGON H .375-16 X 1.25. UOC:XBB	2
3	PBOZZ	2540014357697	6W728	4660920	ARMOR,SUPPLEMENTAL..... UOC:XBB	1
4	PAOZZ	5306014339197	6W728	4397000-062	BOLT,MACHINE..... UOC:XBB	13
5	PAOZZ	5305014366377	6W728	4397000-064	SCREW,CAP,HEXAGON H .375-16 X 1.50. UOC:XBB	13
6	PAOZZ	5365014747982	6W728	4660969-002	SPACER,PLATE ARMOR,LEFT SIDE..... UOC:XBB	26
7	PAOZZ	5310014398177	6W728	4397064-005	NUT,SELF-LOCKING,HE .375-16..... UOC:XBB	26

END OF FIGURE

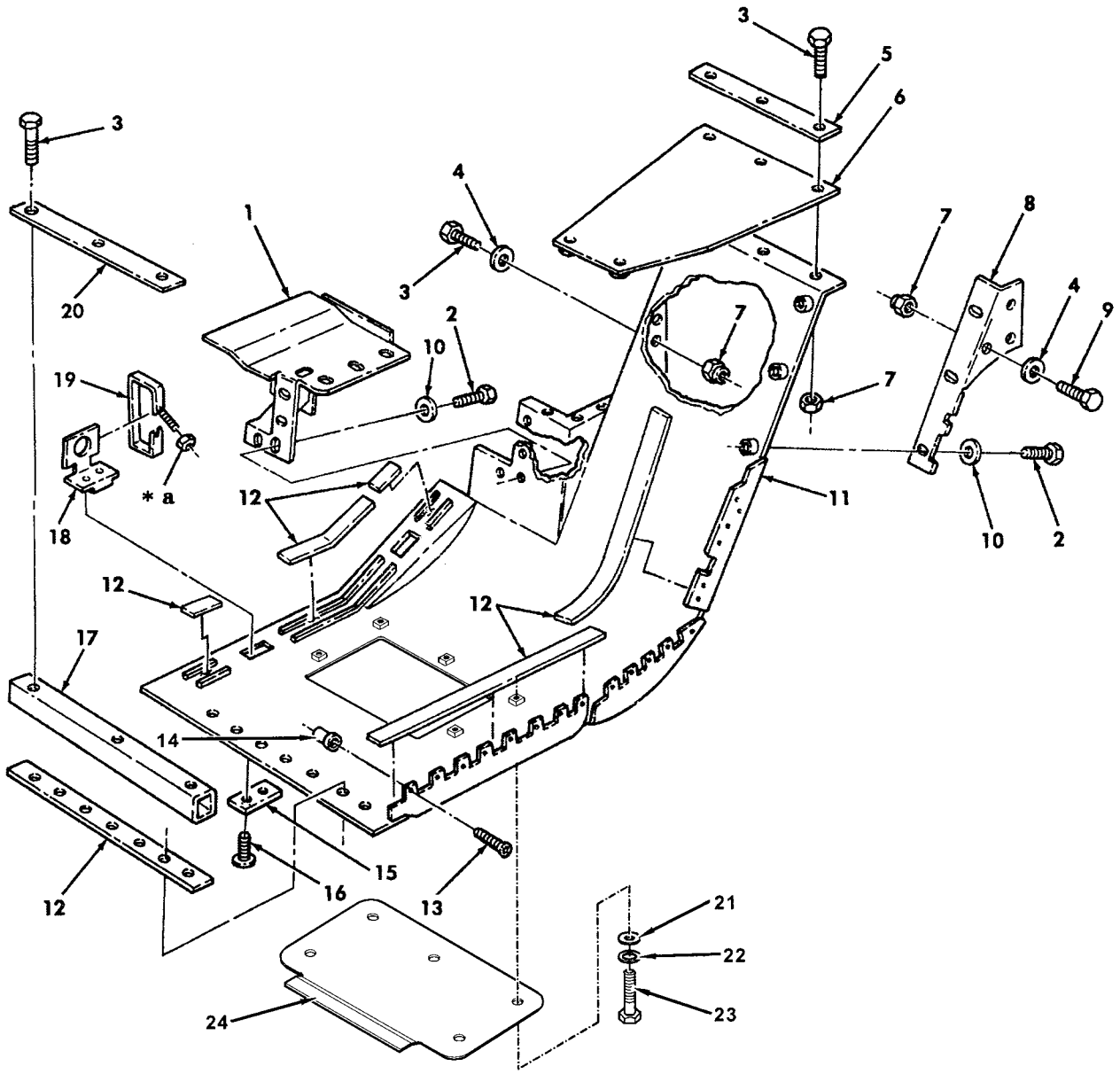

*** a** PART OF ITEM 19

Figure 192. Rear Driver Side Underbody Protection.

(1) ITEM NO	(2) SMR CODE	(3) NSN	(4) CAGEC	(5) PART NUMBER	(6) DESCRIPTION AND USABLE ON CODES(UOC)	(7) QTY
					GROUP 1801 BODY,CAB,HOOD,AND HULL ASSEMBLY	
					FIG. 192 REAR DRIVER SIDE UNDERBODY PROTECTION	
1	PFOZZ	2540014356487	6W728	4660325	ARMOR,SUPPLEMENTAL..... UOC:XBB	1
2	PAOZZ	5305005434372	80204	B1821BH038C075N	SCREW,CAP,HEXAGON H 3/8-16 X 3/4... UOC:XBB	8
3	PAOZZ	5305002253843	80204	B1821BH025C100N	SCREW,CAP,HEXAGON H 1/4-20 X 1.00.. UOC:XBB	8
4	PAOZZ	5310014357784	6W728	4397005-010	WASHER,FLAT 9/32..... UOC:XBB	5
5	PBOZZ	5310014208730	6W728	4668314	PLATE,MOUNTING..... UOC:XBB	1
6	PAOZZ	2540014345237	6W728	4660331	ARMOR,SUPPLEMENTAL..... UOC:XBB	1
7	PFOZZ	5310014398173	6W728	4397064-001	NUT,SELF-LOCKING,HE..... UOC:XBB	8
8	PAOZZ	2540014356307	6W728	4660327	ARMOR,SUPPLEMENTAL..... UOC:XBB	1
9	PAOZZ	5306014376311	6W728	4397000-006	SCREW,CAP,HEXAGON H 1/4-20 X 3/4... UOC:XBB	3
10	PAOZZ	5310014229287	6W728	4397005-012	WASHER,FLAT .344 X .688 X .065..... UOC:XBB	10
* 11	PAOZZ		6W728	6430930-01M1	ARMOR,SUPPLEMENTAL LEFT REAR..... UOC:XBB	1
12	PAOZZ	5330014342854	6W728	4668914	RUBBER STRIP..... UOC:XBB	V
* 13	PFOZA	5305014667937	6W728	4397091-030	SCREW,CAP,SOCKET HE..... UOC:XBB	18
14	PAOZZ	5325013943414	78276	ALS7-420-165	INSERT,SCREW THREAD..... UOC:XBB	18
15	PFOZA	5340014338442	6W728	4668359	PLATE,MOUNTING..... UOC:XBB	1
* 16	PAOZZ	5305014433670	6W728	4397067-120	SCREW,MACHINE..... UOC:XBB	4
17	PAOZZ	5310014336377	6W728	4660811	NUT,SPACER PLATE..... UOC:XBB	1
18	PFOZA	5340014338444	6W728	4668360	BRACKET,MOUNTING..... UOC:XBB	2
19	PAOZZ	5340014563917	6W728	4668988	BAND,RETAINING..... UOC:XBB	4
20	PAOZZ	5340014364353	6W728	4668303	PLATE,MOUNTING..... UOC:XBB	1
* 21	PAOZZ	5310014363742	6W728	4397005-015	WASHER,FLAT 3/8..... UOC:XBB	5
* 22	PAOZZ	5310014177273	6W728	4397004-008	WASHER,LOCK 3/8..... UOC:XBB	5
* 23	PAOZZ	5305015135667	6W728	4397000-059	SCREW,CAP,HEXAGON H 3/8-16 X 7/8... UOC:XBB	5
* 24	PAOZZ		6W728	1000443	COVER,ACCESS..... UOC:XBB	1

END OF FIGURE

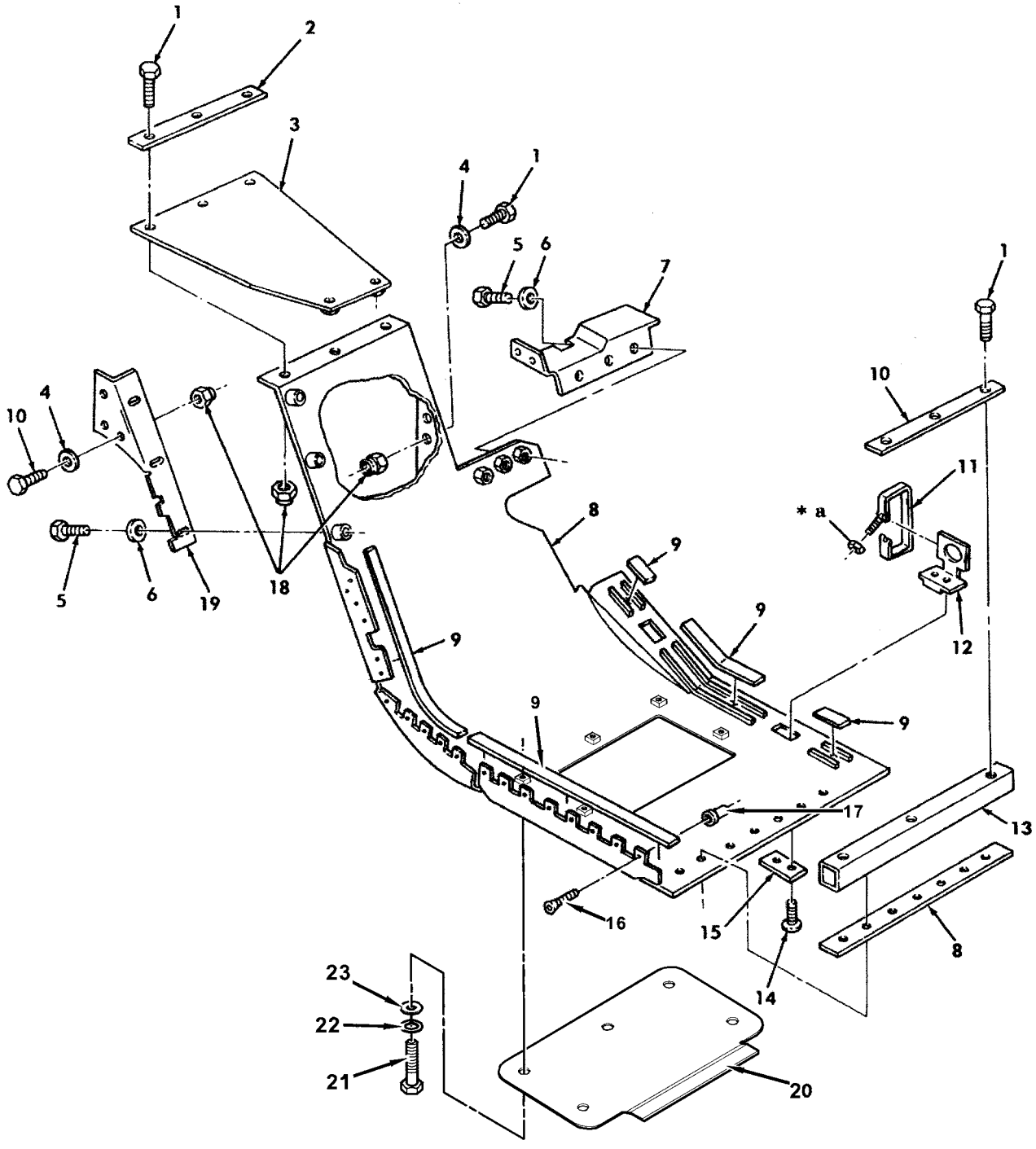

*** a** PART OF ITEM 11

Figure 193. Rear Passenger Side Underbody Protection.

(1) ITEM NO	(2) SMR CODE	(3) NSN	(4) CAGEC	(5) PART NUMBER	(6) DESCRIPTION AND USABLE ON CODES(UOC)	(7) QTY
					GROUP 1801 BODY,CAB,HOOD,AND HULL ASSEMBLY	
					FIG. 193 REAR PASSENGER SIDE UNDERBODY PROTECTION	
1	PAOZZ	5305002253843	80204	B1821BH025C100N	SCREW,CAP,HEXAGON H 1/4-20 X 1.00.. UOC:XBB	8
2	PFOZZ	5340014208730	6W728	4668314	PLATE,MOUNTING..... UOC:XBB	2
3	PBOZZ	2540014345236	6W728	4660330	ARMOR,SUPPLEMENTAL..... UOC:XBB	1
4	PAOZZ	5310014357784	6W728	4397005-010	WASHER,FLAT 9/32..... UOC:XBB	5
5	PAOZZ	5305015304758	6W728	4397000-032	SCREW,CAP,HEXAGON H 5/16-18 X 3/4.. UOC:XBB	8
6	PAOZZ	5310014229287	6W728	4397005-012	WASHER,FLAT .344 X .688 X .065..... UOC:XBB	8
* 7	PFOZZ		6W728	6430929-01M1	ARMOR,SUPPLEMENTAL REAR,R.H..... UOC:XBB	1
8	PAOZZ	2540014346625	6W728	4660303	ARMOR,SUPPLEMENTAL REAR,R.H..... UOC:XBB	1
9	PAOZZ	5330014342852	6W728	4668914-001	RUBBER STRIP .50 X 1.50,2 INCHES LONG..... UOC:XBB	V
10	PAOZZ	5340014364353	6W728	4668303	PLATE,MOUNTING..... UOC:XBB	1
11	PAOZZ	5340014563917	6W728	4668988	BAND,RETAINING..... UOC:XBB	4
12	PFOZA	5340014338444	6W728	4668360	BRACKET,MOUNTING..... UOC:XBB	2
13	PAOZZ	5310014336377	6W728	4660811	NUT SPACER,PLATE..... UOC:XBB	1
* 14	PAOZZ	5305014403670	6W728	4397067-120	SCREW,MACHINE 3/8-24 X .875…..... UOC:XBB	4
15	PFOZA	5340014338442	6W728	4668359	PLATE,MOUNTING..... UOC:XBB	2
* 16	PAOZZ	5305014667937	6W728	4397091-030	SCREW,CAP,SOCKET HE 1/4-20 X 3/4... UOC:XBB	18
17	PAOZZ	5325013951247	78276	ALS7-420-260	INSERT,SCREW THREAD 1/4-20..... UOC:XBB	18
18	PAOZZ	5310014398173	6W728	4397064-001	NUT,SELF-LOCKING,HE 1/4-20..... UOC:XBB	8
19	PFOZZ	2540014356485	6W728	4660326	ARMOR,SUPPLEMENTAL..... UOC:XBB	1
* 20	PAOZZ		6W728	1000443	COVER,ACCESS..... UOC:XBB	1
* 21	PAOZZ	5305015135667	6W728	4397000-059	SCREW,CAP,HEXAGON H 3/8-16 X 7/8... UOC:XBB	5
* 22	PAOZZ	5310014177273	6W728	4397004-008	WASHER,LOCK 3/8..... UOC:XBB	5
* 23	PAOZZ	5310014363742	6W728	4397005-015	WASHER,FLAT 3/8..... UOC:XBB	5

END OF FIGURE

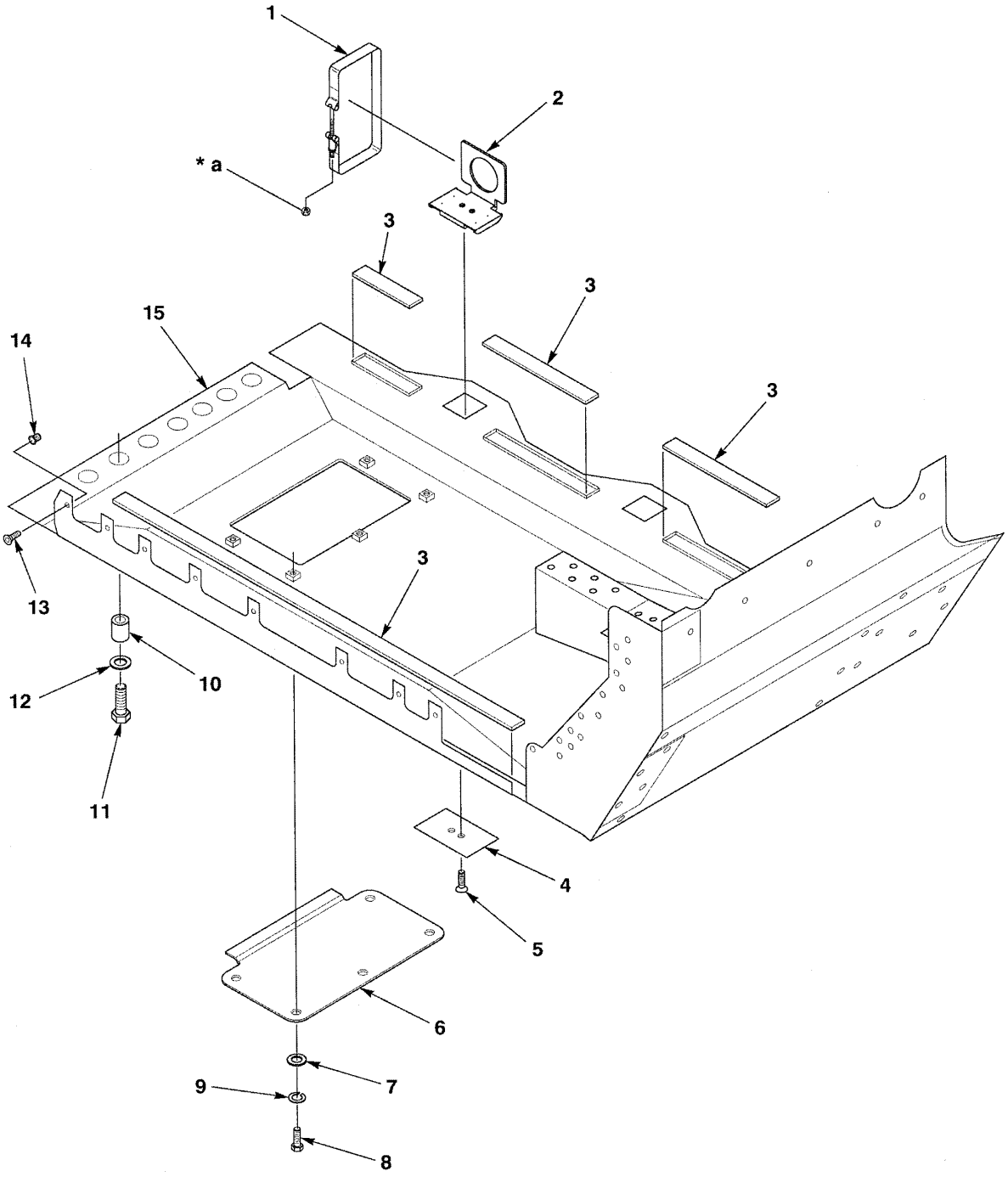

*** a** PART OF ITEM 1

Figure 194. Front Passenger Side Underbody Protection.

(1) ITEM NO	(2) SMR CODE	(3) NSN	(4) CAGEC	(5) PART NUMBER	(6) DESCRIPTION AND USABLE ON CODES(UOC)	(7) QTY
					GROUP 1801 BODY,CAB,HOOD,AND HULL ASSEMBLY	
					FIG. 194 FRONT PASSENGER SIDE UNDERBODY PROTECTION	
1	PAOZZ	5340014563917	6W728	4668988	BAND,RETAINING..... UOC:XBB	6
* 2	PFOZA	5340014338444	6W728	4668360	BRACKET,MOUNTING..... UOC:XBB	3
* 3	PAOZZ	5330014342852	6W728	4668914-001	RUBBER STRIP .50 X 1.18..... UOC:XBB	V
* 4	PFOZA	5340014338442	6W728	4668359	PLATE,MOUNTING..... UOC:XBB	1
* 5	PAOZZ	5305014403670	6W728	4397032-120	SCREW,MACHINE 3/8-24 x 7/8..... UOC:XBB	6
* 6	PAOZZ		6W728	1000443-01M1	COVER,ACCESS,GREEN..... UOC:XBB	1
* 6	PAOZZ		6W728	1000443-200M1	COVER,ACCESS,TAN..... UOC:XBB	1
* 7	PAOZZ	5310014363742	6W728	4397005-015	WASHER,FLAT 3/8..... UOC:XBB	5
* 8	PAOZZ	5305015135667	6W728	4397000-059	SCREW,CAP,HEXAGON H 3/8-16 X 7/8... UOC:XBB	5
* 9	PAOZZ	5310014177273	6W728	4397004-008	WASHER,LOCK 3/8..... UOC:XBB	5
* 10	PAOZZ	5365014361233	6W728	4660957	SPACER,RING FRONT TO REAR..... UOC:XBB	7
* 11	PAOZZ	5305014366337	6W728	4397000-064	SCREW,CAP,HEXAGON H 3/8-16 X 1.50.. UOC:XBB	7
* 12	PAOZZ	5310014357791	6W728	4397005-075	WASHER,FLAT 13/32..... UOC:XBB	7
* 13	PAOZZ	5305014467937	6W728	4397091-030	SCREW,CAP,SOCKET HE 1/4-20 X 3/4... UOC:XBB	8
* 14	PAOZZ	5325013951247	78276	ALS7-420-260	INSERT,SCREW THREAD 1/4-20..... UOC:XBB	8
* 15	PAOZZ		6W728	6430928-300M1	ARMOR,SUPPLEMENTAL R.H.FRONT..... UOC:XBB	1

END OF FIGURE

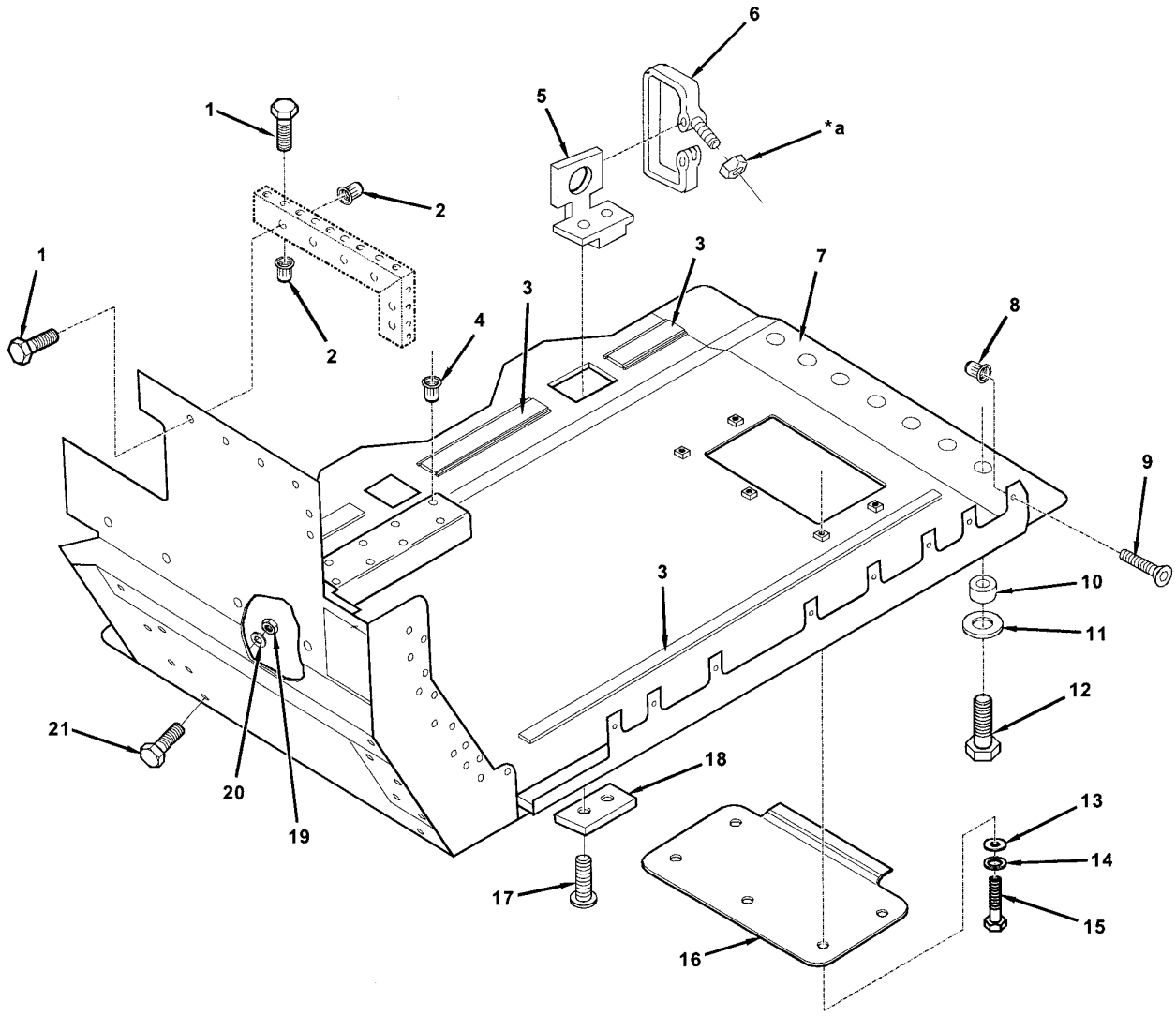

*** a** PART OF ITEM 6

Figure 195. Front Driver Side Underbody Protection.

(1) ITEM NO	(2) SMR CODE	(3) NSN	(4) CAGEC	(5) PART NUMBER	(6) DESCRIPTION AND USABLE ON CODES(UOC)	(7) QTY
					GROUP 1801 BODY,CAB,HOOD,AND HULL ASSEMBLY	
					FIG. 195 FRONT DRIVER SIDE UNDERBODY PROTECTION	
* 1	PAOZZ	5306014376309	6W728	4397000-008	BOLT,MACHINE 1/4-20 X 1.00..... UOC:XBB	9
* 2	PAOZZ	5310015212135	6W728	4397050-025	NUT,UPSET 1/4-20..... UOC:XBB	2
* 3	PAOZZ	5330014342852	6W728	4668914-001	RUBBER STRIP .50 X 1.18..... UOC:XBB	V
* 4	PAOZZ	5325014749732	78276	ALS7-616-150	INSERT,SCREW THREAD 3/8-16..... UOC:XBB	15
* 5	PFOZA	5340014338444	6W728	4668360	BRACKET,MOUNTING..... UOC:XBB	3
* 6	PAOZZ	5340014563917	6W728	4668988	BAND,RETAINING..... UOC:XBB	6
* 7	PAOZZ		6W728	6430720-01M1	ARMOR,SUPPLEMENTAL..... FRONT,L.H. UOC:XBB	1
* 8	PAOZZ	5325013951247	78276	ALS7-420-260	INSERT,SCREW THREAD 1/4-20..... UOC:XBB	8
* 9	PAOZZ	5305014667937	6W728	4397091-030	SCREW,CAP,SOCKET HD 1/4-20 X 3/4... UOC:XBB	8
* 10	PAOZZ	5365014361233	6W728	4660957	SPACER,RING FRONT TO REAR..... UOC:XBB	7
* 11	PAOZZ	5310014357791	6W728	4397005-075	WASHER,FLAT 13/32..... UOC:XBB	7
* 12	PAOZZ	5305014339198	6W728	4397000-065	SCREW,CAP,HEXAGON H 3/8-16 X 1.75.. UOC:XBB	7
* 13	PAOZZ	5310014363742	6W728	4397005-015	WASHER,FLAT 3/8..... UOC:XBB	5
* 14	PAOZZ	5310014177273	6W728	4397004-008	WASHER,LOCK 3/8..... UOC:XBB	5
* 15	PAOZZ	5305015135667	6W728	4397000-059	SCREW,CAP,HEXAGON H 3/8-16 X 7/8... UOC:XBB	5
* 16	PAOZZ		6W728	1000443-01M1	COVER,ACCESS,GREEN..... UOC:XBB	1
* 16	PAOZZ		6W728	1000443-200M1	COVER,ACCESS,TAN..... UOC:XBB	1
* 17	PAOZZ	5305014403670	6W728	4397067-120	SCREW,MACHINE 3/8-24 x 7/8..... UOC:XBB	6
* 18	PFOZA	5340014338442	6W728	4668359	PLATE,MOUNTING..... UOC:XBB	3
* 19	PAOZZ	5310014398177	6W728	4397064-005	NUT,SELF-LOCKING HE 3/8-16..... UOC:XBB	6
* 20	PAOZZ		6W728	4660868-002	SPACER,KICK PANEL WEDGE,LOWER..... UOC:XBB	2
* 21	PAOZZ		6W728	4397000-075	SCREW,CAP,HEXAGON H 3/8-16 X 4.25.. UOC:XBB	2

END OF FIGURE

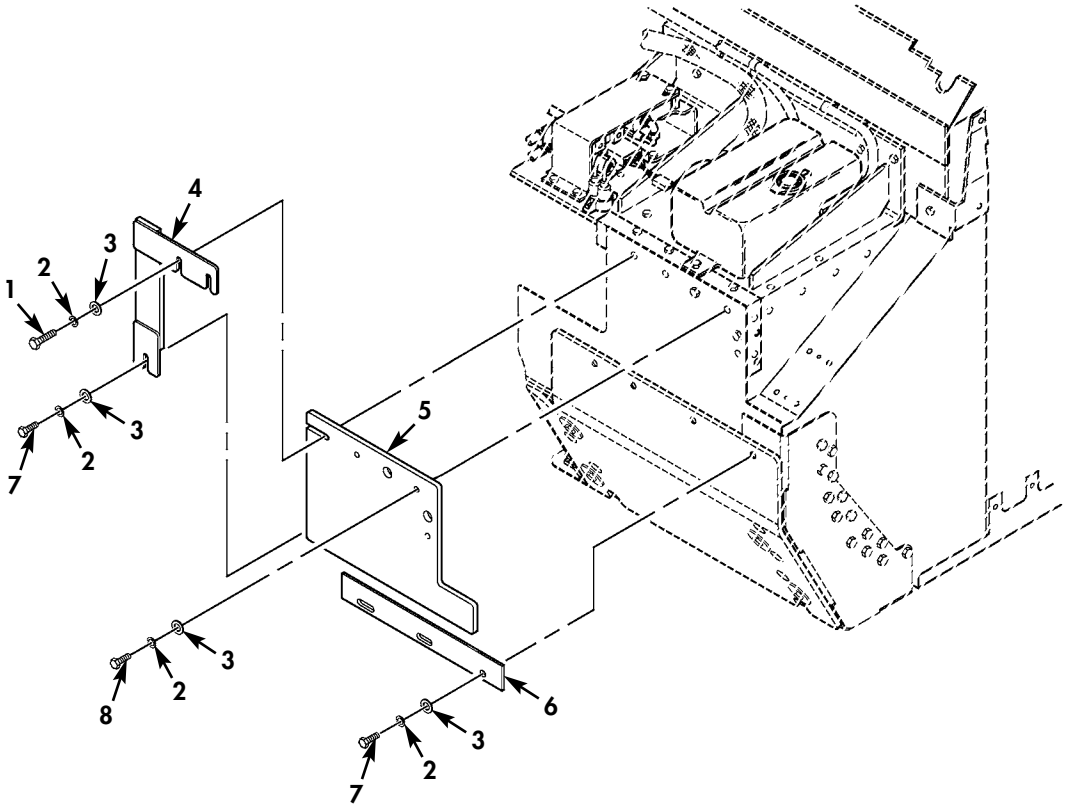

Figure 195A. Frag 2 Kit, Left Front Cowl Armor (Sheet 1 of 2).

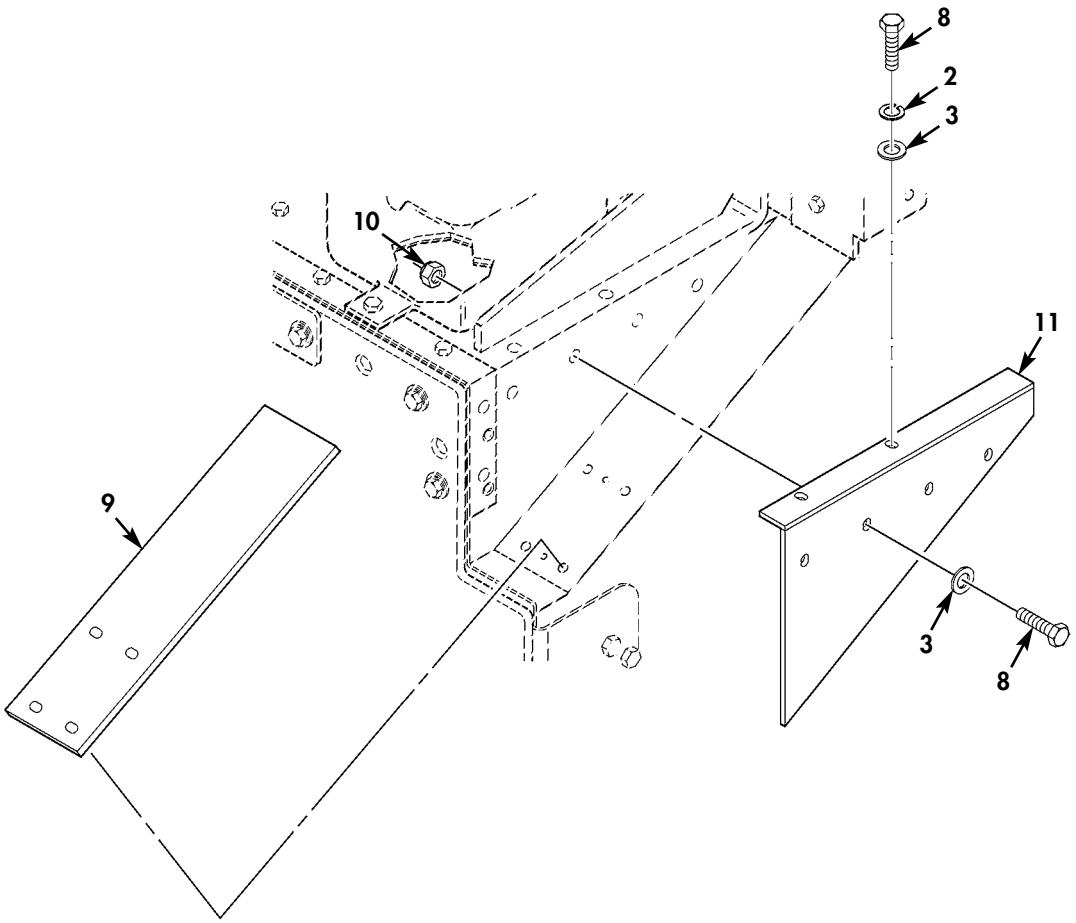

Figure 195A. Frag 2 Kit, Left Front Cowl Armor (Sheet 2 of 2).

(1) ITEM NO	(2) SMR CODE	(3) NSN	(4) CAGEC	(5) PART NUMBER	(6) DESCRIPTION AND USABLE ON CODES(UOC)	(7) QTY
					GROUP 1801 BODY,CAB,HOOD,AND HULL ASSEMBLY	
					FIG. 195A FRAG 2 KIT,LEFT FRONT COWL ARMOR	
* 1	PAOZZ	5306014206635	6W728	4397000-012	BOLT,MACHINE 1/4-20 X 1.50..... UOC:XBB	2
* 2	PAOZZ	5310014330941	6W728	4397004-006	WASHER,LOCK 1/4..... UOC:XBB	8
* 3	PAOZZ	5340014178995	6W728	4397005-011	WASHER,FLAT 1/4..... UOC:XBB	12
* 4	PAOZZ	9515015527026	6W728	6434240-200M1	ARMOR,PLATE COWL,UPPER..... UOC:XBB	1
* 5	PAOZZ	9515015527048	6W728	6434835-200M1	ARMOR,PLATE COWL..... UOC:XBB	1
* 6	PAOZZ	9515015521624	6W728	6434875-200M1	ARMOR,PLATE COWL,LOWER..... UOC:XBB	1
* 7	PAOZZ	5306014307399	6W728	4397000-006	BOLT,MACHINE 1/4-20 X 3/4..... UOC:XBB	2
* 8	PAOZZ	5306014365392	6W728	4397000-010	BOLT,MACHINE 1/4-20 x 1.25..... UOC:XBB	8
* 9	PAOZZ	9515015527022	6W728	6434243-200M1	ARMOR,PLATE..... UOC:XBB	1
* 10	PAOZZ	5310014398173	6W728	4397064-001	NUT,SELF-LOCKING,HE 1/4-20..... UOC:XBB	4
* 11	PAOZZ	9515015527037	6W728	6434245-200M1	ARMOR,PLATE..... UOC:XBB	1

END OF FIGURE

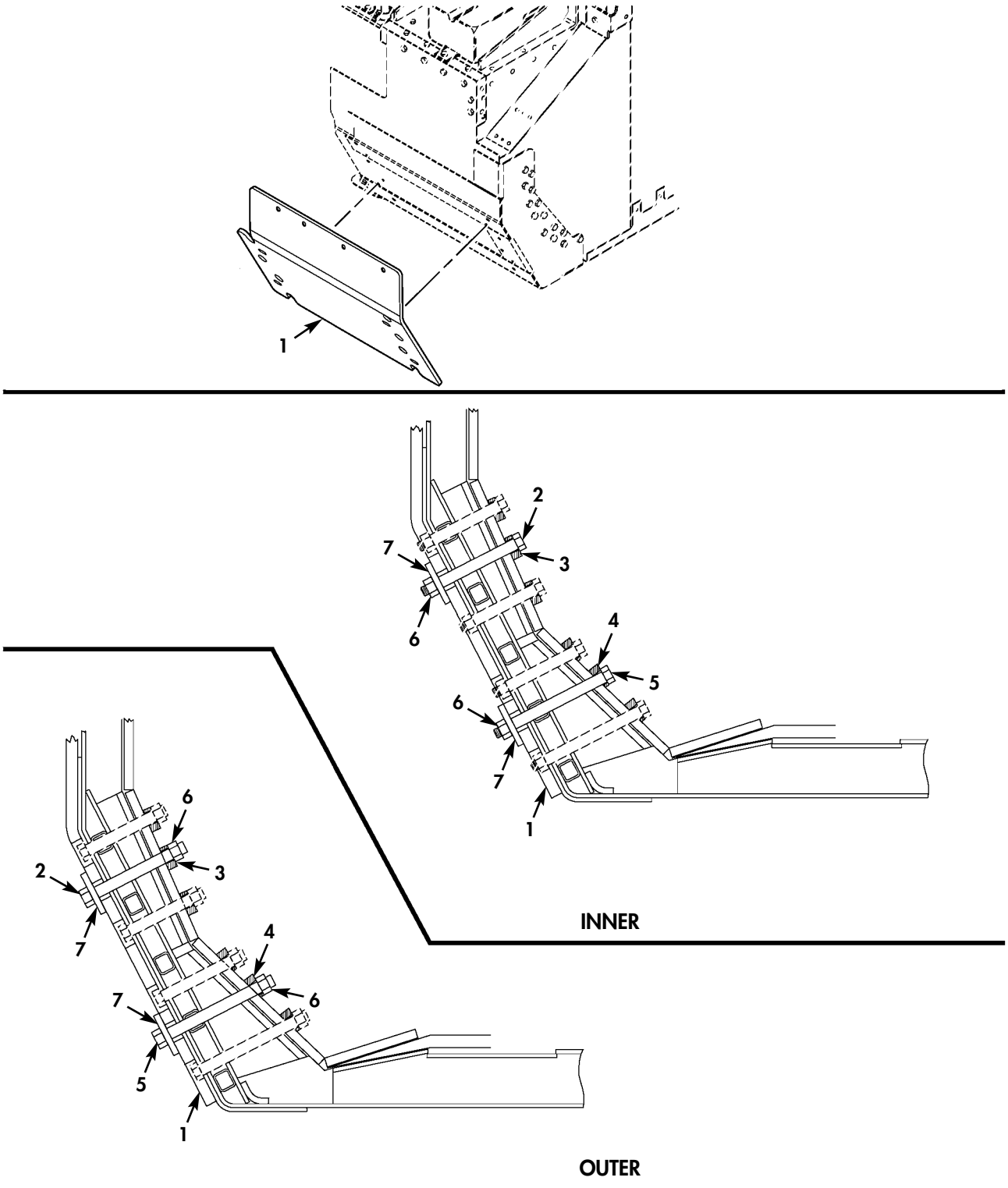

Figure 195B. Frag 2 Kit, Left Front Wheelwell Frag Armor.

(1) ITEM NO	(2) SMR CODE	(3) NSN	(4) CAGEC	(5) PART NUMBER	(6) DESCRIPTION AND USABLE ON CODES(UOC)	(7) QTY
					GROUP 1801 BODY,CAB,HOOD,AND HULL ASSEMBLY	
					FIG. 195B FRAG 2 KIT,LEFT FRONT WHEELWELL FRAG ARMOR	
* 1	PAOZZ	9515015527068	6W728	6434836-200M1	ARMOR,PLATE..... UOC:XBB	1
* 2	PAOZZ	5305014750361	6W728	4397000-074	SCREW,CAP,HEXAGON H 3/8-16 X 4.00... UOC:XBB	2
* 3	PAOZZ	5365014361230	6W728	4660869	SPACER,RING..... UOC:XBB	2
* 4	PAOZZ	5365014361234	6W728	4660868-002	SPACER,RING..... UOC:XBB	2
* 5	PAOZZ	5305008576886	80204	B1821BH038C450N	SCREW,CAP,HEXAGON H 3/8-16 X 4.50... UOC:XBB	2
* 6	PAOZZ	5310014398177	6W728	4397064-005	NUT,SELF-LOCKING,HE 3/8-16..... UOC:XBB	4
* 7	PAOZZ	5310015528302	6W728	6434369-400M1	WASHER,FLAT 3/8..... UOC:XBB	4

END OF FIGURE

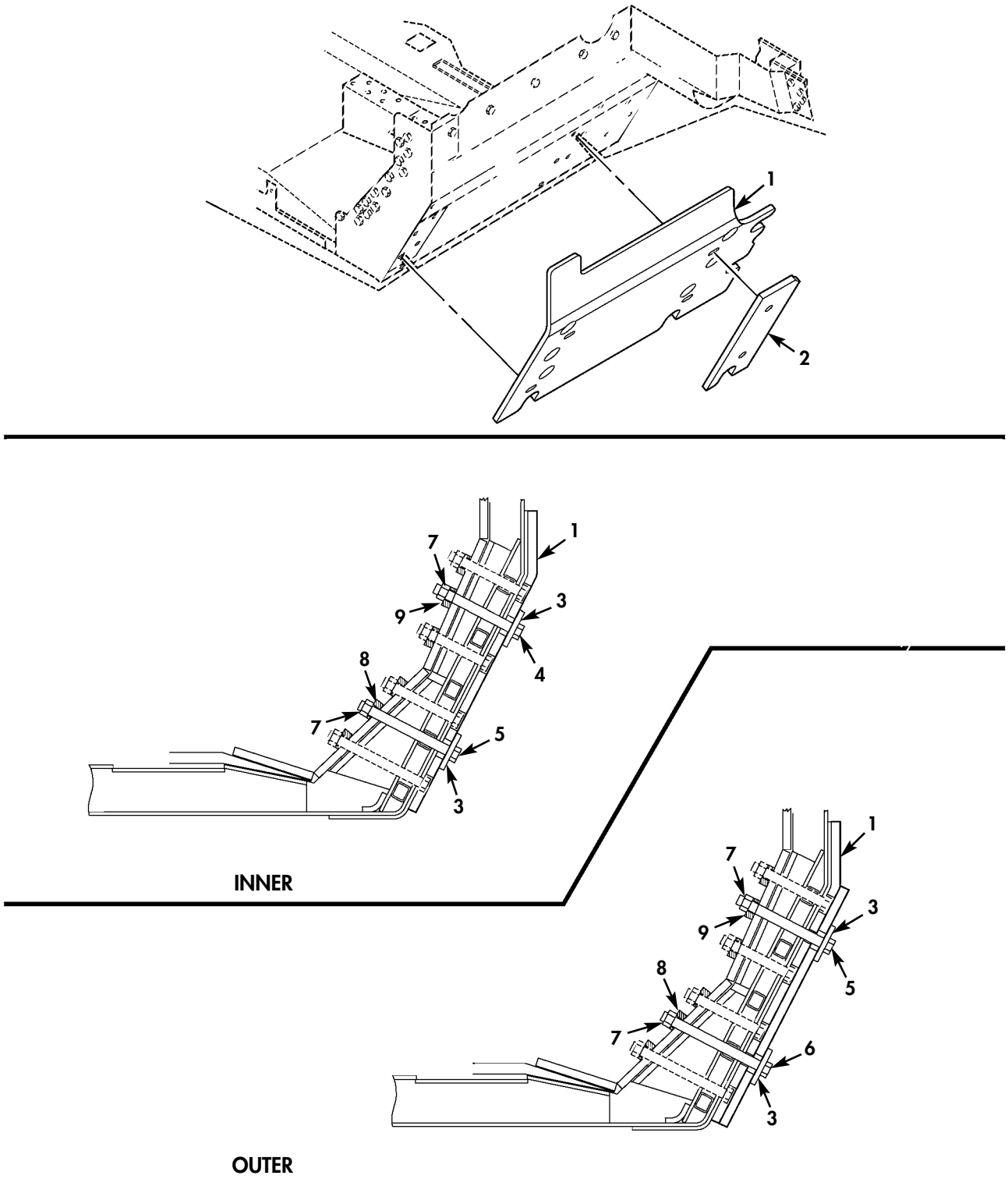

Figure 195C. Frag 2 Kit, Right Front Wheelwell Frag Armor.

(1) ITEM NO	(2) SMR CODE	(3) NSN	(4) CAGEC	(5) PART NUMBER	(6) DESCRIPTION AND USABLE ON CODES(UOC)	(7) QTY
					GROUP 1801 BODY,CAB,HOOD,AND HULL ASSEMBLY	
					FIG. 195C FRAG 2 KIT,RIGHT FRONT WHEELWELL FRAG ARMOR	
* 1	PAOZZ	9515015522159	6W728	6434241-200M1	ARMOR,PLATE..... UOC:XBB	1
* 2	PAOZZ	9515015527042	6W728	6434368-200M1	ARMOR,PLATE..... UOC:XBB	1
* 3	PAOZZ	5310015528302	6W728	6434369-400M1	WASHER,FLAT..... UOC:XBB	4
* 4	PAOZZ	5305014750361	6W728	4397000-074	SCREW,CAP,HEXAGON H 3/8-16 X 4.00... UOC:XBB	1
* 5	PAOZZ	5305008576886	80204	B1821BH038C450N	SCREW,CAP,HEXAGON H 3/8-16 X 4.50... UOC:XBB	2
* 6	PAOZZ	5305015355709	6W728	4397000-078	SCREW,CAP,HEXAGON H 3/8-16 X 5.00... UOC:XBB	1
* 7	PAOZZ	5310014398177	6W728	4397064-005	NUT,SELF-LOCKING,HE 3/8-16..... UOC:XBB	4
* 8	PAOZZ	5365014361234	6W728	4660868-002	SPACER,RING..... UOC:XBB	2
* 9	PAOZZ	5365014361230	6W728	4660869	SPACER,RING..... UOC:XBB	2

END OF FIGURE

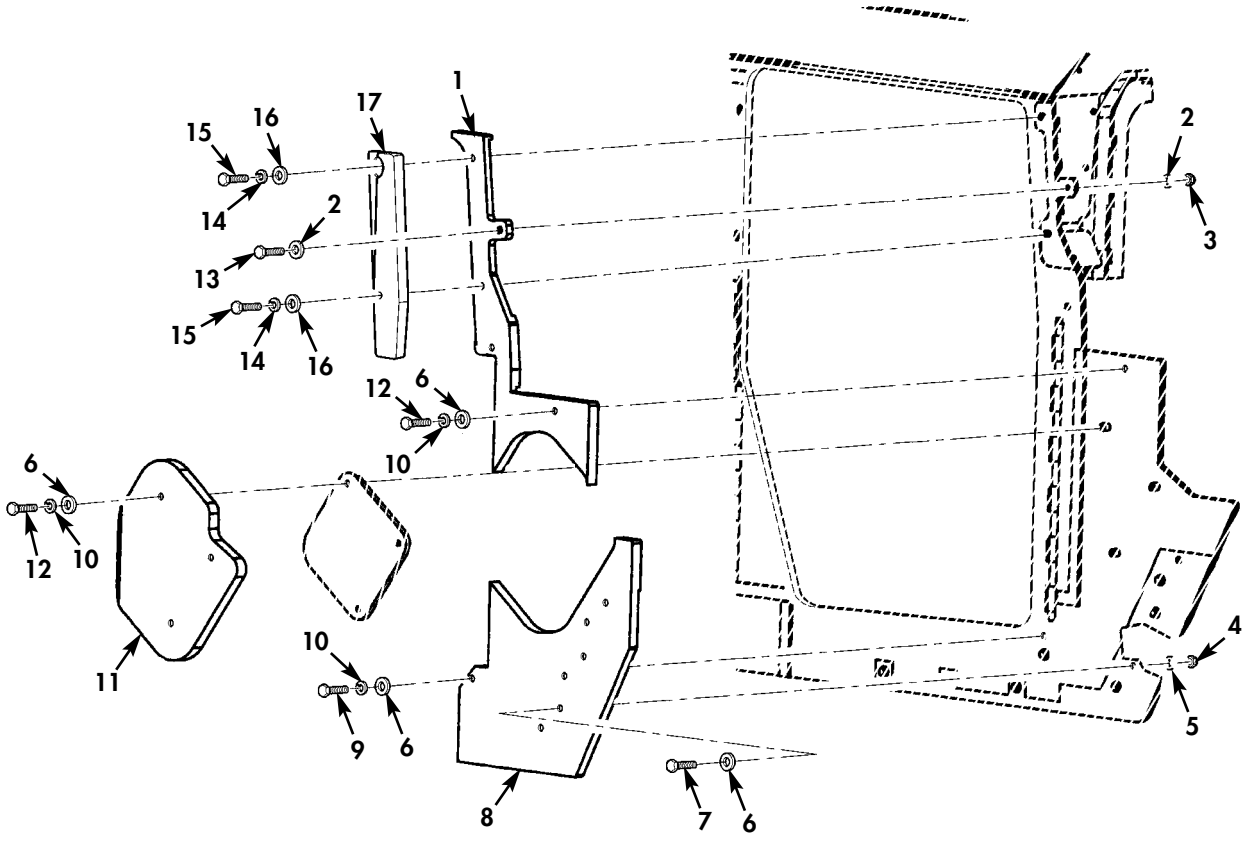

Figure 195D. Enhanced Frag 1 Right-Hand A-Pillar Overlay.

(1) ITEM NO	(2) SMR CODE	(3) NSN	(4) CAGEC	(5) PART NUMBER	(6) DESCRIPTION AND USABLE ON CODES(UOC)	(7) QTY
					GROUP 1801 BODY,CAB,HOOD,AND HULL ASSEMBLY	
					FIG. 195D ENHANCED FRAG 1 RIGHT HAND A-PILLAR OVERLAY	
* 1	PAOZZ	2540015553018	34623	6030944	ARMOR,SUPPLEMENTAL..... UOC:TTA,TT1,UUA,UU2	1
* 2	PAOZZ	5310011191024	24617	2436162	WASHER,FLAT 5/16..... UOC:TTA,TT1,UUA,UU2	2
* 3	PAOZZ	5310008140673	81349	M45913/3-5CG8C	NUT,SELF-LOCKING,HE 5/16-18..... UOC:TTA,TT1,UUA,UU2	1
* 4	PAOZZ	5310009359021	96906	MS51943-35	NUT,SELF-LOCKING,HE 3/8-16..... UOC:TTA,TT1,UUA,UU2	5
* 5	PAOZZ	5310012866077	19207	12341856	WASHER,FLAT 3/8..... UOC:TTA,TT1,UUA,UU2	5
* 6	PAOZZ	5310009871294	19200	10910174-16	WASHER,FLAT 3/8..... UOC:TTA,TT1,UUA,UU2	10
* 7	PAOZZ	5305008080864	80204	B1821BH038C325N	SCREW,CAP,HEXAGON H 3/8-16 X 3.25.. UOC:TTA,TT1,UUA,UU2	5
* 8	PAOZZ	2540015545912	34623	6032574	ARMOR,SUPPLEMENTAL IED OVERLAY FRAG-1..... UOC:TTA,TT1,UUA,UU2	1
* 9	PAOZZ	5305009640503	80204	B1821BH038C500N	SCREW,CAP,HEXAGON H 3/8-16 X 5.00.. UOC:TTA,TT1,UUA,UU2	1
* 10	PAOZZ	5310000045033	80205	MS35338-46	WASHER,LOCK 3/8..... UOC:TTA,TT1,UUA,UU2	5
* 11	PAOZZ	2540015550038	34623	6030943	ARMOR,SUPPLEMENTAL..... UOC:TTA,TT1,UUA,UU2	1
* 12	PAOZZ	5305005432866	80204	B1821BH038C250N	SCREW,CAP,HEXAGON H 3/8-16 X 2.50.. UOC:TTA,TT1,UUA,UU2	4
* 13	PAOZZ	5305002264831	80204	B1821BH031C150N	SCREW,CAP,HEXAGON H 5/16-18 X 1.50. UOC:TTA,TT1,UUA,UU2	1
* 14	PAOZZ	5310004079566	80205	MS35338-45	WASHER,LOCK..... UOC:TTA,TT1,UUA,UU2	2
* 15	PAOZZ	5306002264834	80204	B1821BH031C225N	BOLT,MACHINE 5/16-18 X 2.25..... UOC:TTA,TT1,UUA,UU2	2
* 16	PAOZZ	5310009643415	19207	10910174-19	WASHER,FLAT 5/16..... UOC:TTA,TT1,UUA,UU2	2
* 17	PAOZZ	2540015547151	34623	6032523	ARMOR,SUPPLEMENTAL..... UOC:TTA,TT1,UUA,UU2	1

END OF FIGURE

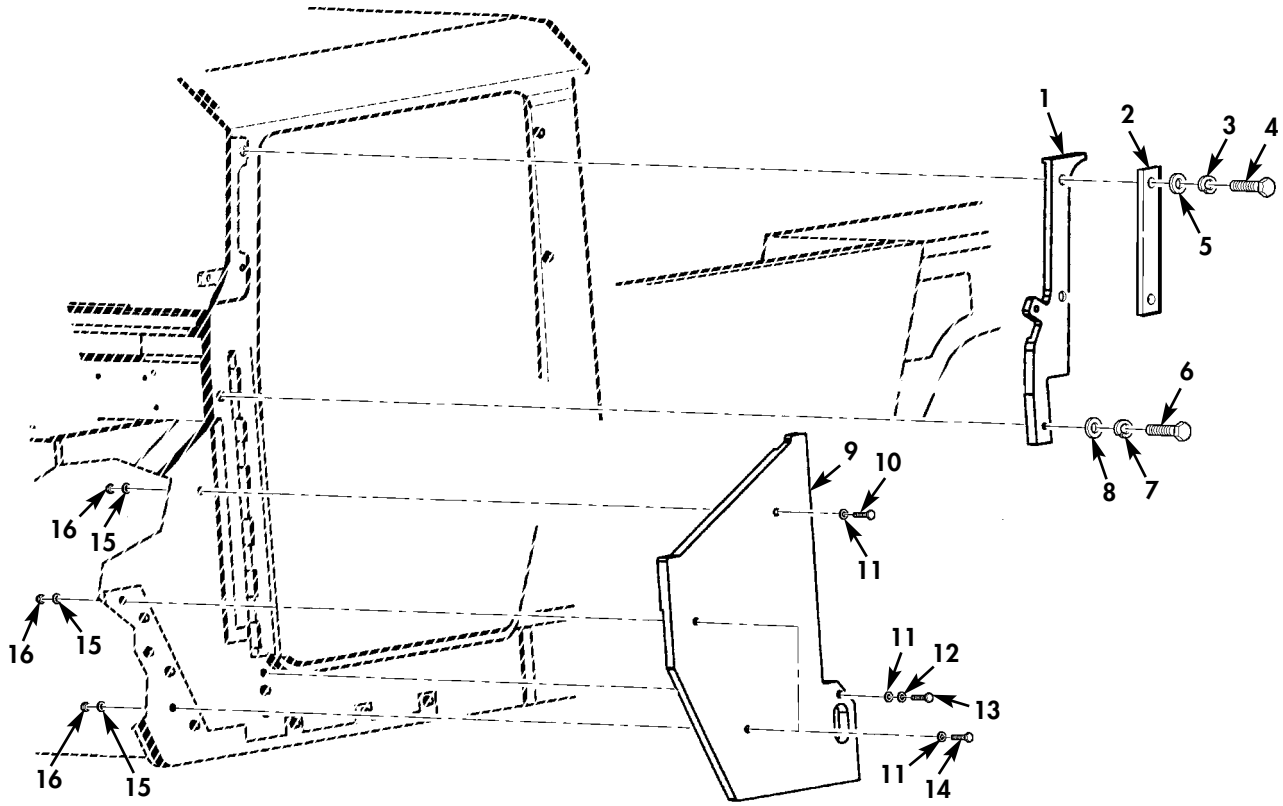

Figure 195E. Enhanced Frag 1 Left-Hand A-Pillar Upper Overlay.

(1) ITEM NO	(2) SMR CODE	(3) NSN	(4) CAGEC	(5) PART NUMBER	(6) DESCRIPTION AND USABLE ON CODES(UOC)	(7) QTY
					GROUP 1801 BODY,CAB,HOOD,AND HULL ASSEMBLY	
					FIG. 195E ENHANCED FRAG 1 LEFT HAND A-PILLAR UPPER OVERLAY	
* 1	PAOZZ	2540015549913	34623	6030937	ARMOR,SUPPLEMENTAL..... UOC:TTA,TT1,UUA,UU2	1
* 2	PAOZZ	2540015546075	34623	6032522	ARMOR,SUPPLEMENTAL..... UOC:TTA,TT1,UUA,UU2	1
* 3	PAOZZ	5310004079566	80205	MS35338-45	WASHER,LOCK 5/16..... UOC:TTA,TT1,UUA,UU2	2
* 4	PAOZZ	5306002264838	80204	B1821BH031C325N	BOLT,MACHINE 5/16-18 X 3.25..... UOC:TTA,TT1,UUA,UU2	2
* 5	PAOZZ	5310011328275	24617	9418924	WASHER,FLAT 5/16..... UOC:TTA,TT1,UUA,UU2	2
* 6	PAOZZ	5306002264834	80204	B1821BH031C225N	BOLT,MACHINE 5/16-18 X 2.25..... UOC:TTA,TT1,UUA,UU2	1
* 7	PAOZZ	5310004079566	80205	MS35338-45	WASHER,LOCK 5/16..... UOC:TTA,TT1,UUA,UU2	1
* 8	PAOZZ	5310011328275	24617	9418924	WASHER,FLAT 5/16..... UOC:TTA,TT1,UUA,UU2	1
* 9	PAOZZ		34623	6034239	ARMOR,PLATE..... UOC:TTA,TT1,UUA,UU2	1
* 10	PAOZZ	5305008465703	80204	B1821BH038C300N	SCREW,CAP,HEXAGON H 3/8-16 X 3.00.. UOC:TTA,TT1,UUA,UU2	1
* 11	PAOZZ	5310009871294	19200	10910174-16	WASHER,FLAT 3/8..... UOC:TTA,TT1,UUA,UU2	6
* 12	PAOZZ	5310006379541	65035	P49866-11	WASHER,LOCK 3/8..... UOC:TTA,TT1,UUA,UU2	1
* 13	PAOZZ	5305014581670	80204	B1821BH038C550N	SCREW,CAP,HEXAGON H 3/8-16 X 5.50.. UOC:TTA,TT1,UUA,UU2	1
* 14	PAOZZ	5305008080864	80204	B1821BH038C325N	SCREW,CAP,HEXAGON H 3/8-16 X 3.25.. UOC:TTA,TT1,UUA,UU2	5
* 15	PAOZZ	5310012866077	19207	12341856	WASHER,FLAT 7/16..... UOC:TTA,TT1,UUA,UU2	6
* 16	PAOZZ	5310009359021	96906	MS51943-35	NUT,SELF-LOCKING,HE 3/8..... UOC:TTA,TT1,UUA,UU2	6

END OF FIGURE

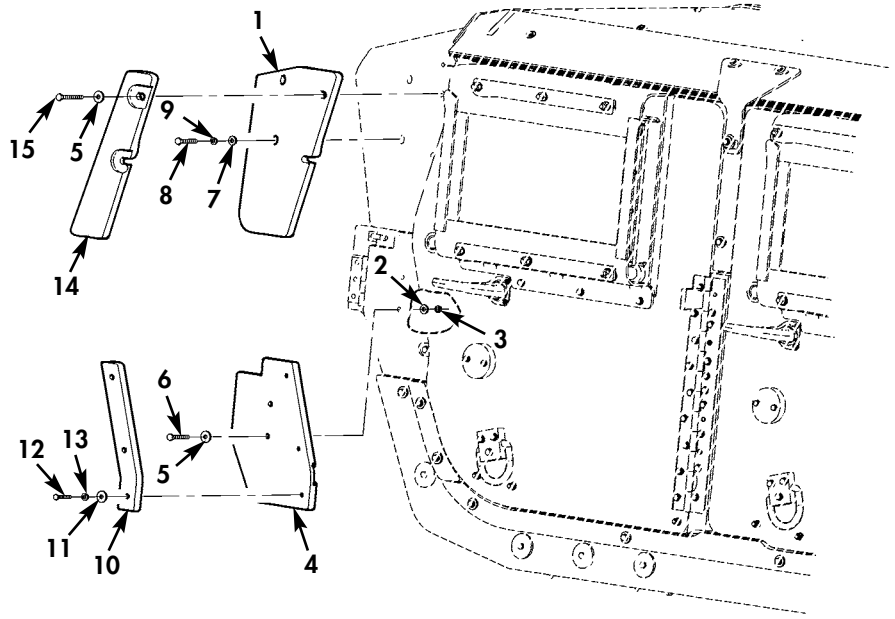

M1165A1

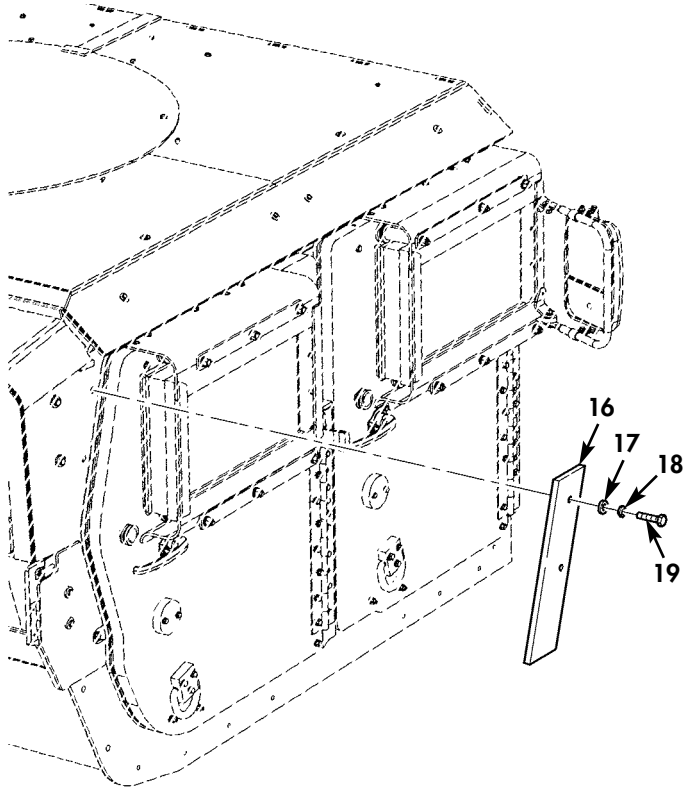

M1151A1

Figure 195F. Enhanced Frag 1 Right C-Pillar Overlay.

(1) ITEM NO	(2) SMR CODE	(3) NSN	(4) CAGEC	(5) PART NUMBER	(6) DESCRIPTION AND USABLE ON CODES(UOC)	(7) QTY
					GROUP 1801 BODY,CAB,HOOD,AND HULL ASSEMBLY	
					FIG. 195F ENHANCED FRAG 1 RIGHT C-PILLAR OVERLAY	
* 1	PAOZZ	2540015549596	34623	6033067	ARMOR,SUPPLEMENTAL,UPPER..... UOC:TTA,TT1,UUA,UU2	1
* 2	PAOZZ	5310012866077	19207	12341856	WASHER,FLAT 3/8..... UOC:TTA,TT1,UUA,UU2	2
* 3	PAOZZ	5310009359021	96906	MS51943-35	NUT,SELF-LOCKING,HE 3/8-16..... UOC:TTA,TT1,UUA,UU2	2
* 4	PAOZZ	2540015548629	34623	6032586	ARMOR,SUPPLEMENTAL LOWER..... UOC:TTA,TT1,UUA,UU2	1
* 5	PAOZZ	5310009871294	19200	10910174-16	WASHER,FLAT 3/8..... UOC:TTA,TT1,UUA,UU2	2
* 6	PAOZZ	5305005432866	80204	B1821BH038C250N	SCREW,CAP,HEXAGON H 3/8-16 X 2.50.. UOC:TTA,TT1,UUA,UU2	2
* 7	PAOZZ	5310008775972	19200	10910174-3	WASHER,FLAT 3/8..... UOC:TTA,TT1,UUA,UU2	2
* 8	PAOZZ	5305006388920	80204	B1821BH038C225N	SCREW,CAP,HEXAGON H 3/8-16 X 2.25.. UOC:TTA,TT1,UUA,UU2	2
* 9	PAOZZ	5310000045033	80205	MS35338-46	WASHER,LOCK 3/8..... UOC:TTA,TT1,UUA,UU2	2
* 10	PAOZZ	2540015549407	34623	6032587	ARMOR,SUPPLEMENTAL..... UOC:TTA,TT1,UUA,UU2	1
* 11	PAOZZ	5310011328275	24617	9418924	WASHER,FLAT 5/16..... UOC:TTA,TT1,UUA,UU2	3
* 12	PAOZZ	5306002264833	80204	B1821BH031C200N	BOLT,MACHINE 5/16-18 X 2.00..... UOC:TTA,TT1,UUA,UU2	3
* 13	PAOZZ	5310004079566	80205	MS35338-45	WASHER,LOCK 5/16..... UOC:TTA,TT1,UUA,UU2	3
* 14	PAOZZ		34623	6038358	ARMOR,PLATE C-PILLAR,UPPER..... UOC:TTA,TT1,UUA,UU2	1
* 15	PAOZZ	5305008080864	80204	B1821BH038C325N	SCREW,CAP,HEXAGON H 3/8-16 X 3.25.. UOC:TTA,TT1,UUA,UU2	2
* 16	PAOZZ	2540015546039	34623	6032577	ARMOR,PLATE..... UOC:TTA,TT1,UUA,UU2	1
* 17	PAOZZ	5310009871294	19200	10910174-16	WASHER,FLAT 3/8..... UOC:TTA,TT1,UUA,UU2	2
* 18	PAOZZ	5310006379541	65035	P49866-11	WASHER,LOCK 3/8..... UOC:TTA,TT1,UUA,UU2	2
* 19	PAOZZ	5305007813926	80204	B1821BH038C275N	SCREW,CAP,HEXAGON H 3/8-16 X 2.75.. UOC:TTA,TT1,UUA,UU2	2

END OF FIGURE

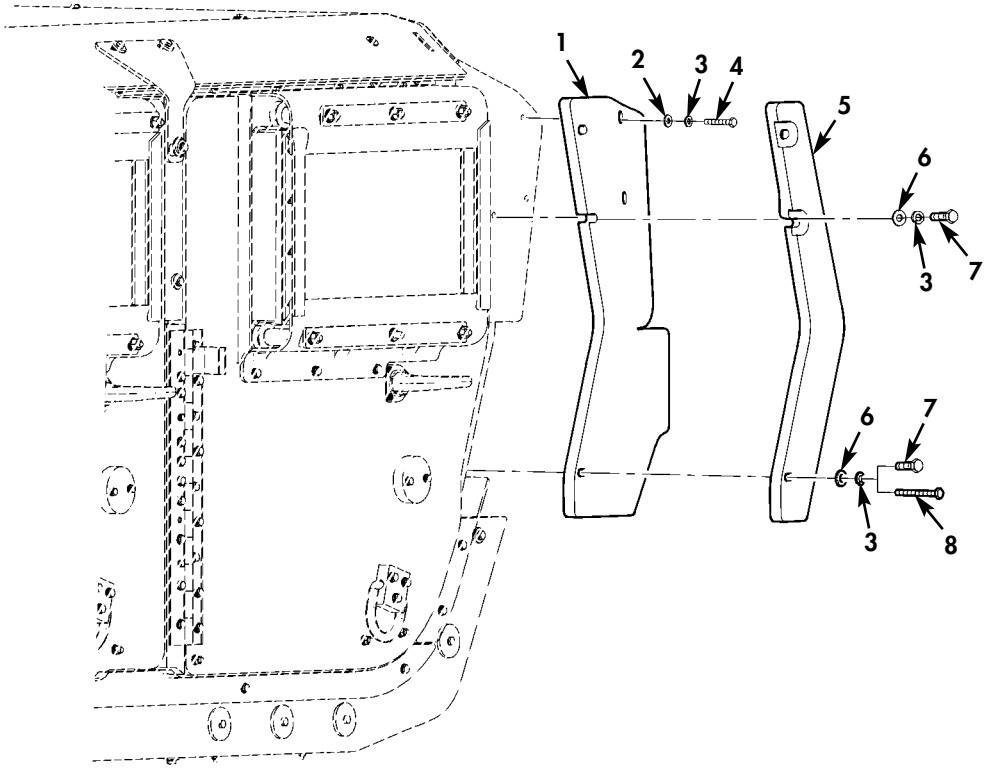

Figure 195G. Enhanced Frag 1 Left C-Pillar Overlay.

(1) ITEM NO	(2) SMR CODE	(3) NSN	(4) CAGEC	(5) PART NUMBER	(6) DESCRIPTION AND USABLE ON CODES(UOC)	(7) QTY
					GROUP 1801 BODY,CAB,HOOD,AND HULL ASSEMBLY	
					FIG. 195G ENHANCED FRAG 1 LEFT C-PILLAR OVERLAY	
* 1	PAOZZ		34623	6038413	ARMOR,PLATE..... UOC:TT1,UU2	1
* 2	PAOZZ	5310008775972	19200	10910174-3	WASHER,FLAT 3/8..... UOC:TT1,UU2	2
* 3	PAOZZ	5310000045033	80205	MS35338-46	WASHER,LOCK 3/8..... UOC:TTA,TT1	5
* 4	PAOZZ	5305006388920	80204	B1821BH038C225N	SCREW,CAP,HEXAGON H 3/8-16 X 2.25.. UOC:TT1,UU2	2
* 5	PAOZZ	2540015545906	34623	6030338	ARMOR,SUPPLEMENTAL UPPER..... UOC:TTA	1
* 5	PAOZZ		34623	6038356	ARMOR,SUPPLEMENTAL UPPER..... UOC:TT1,UU2	1
* 6	PAOZZ	5310009871294	19200	10910174-16	WASHER,FLAT 3/8..... UOC:TTA,TT1,UU2	3
* 7	PAOZZ	5305008213869	80204	B1821BH038C175N	SCREW,CAP,HEXAGON H 3/8-16 X 1.75.. UOC:TTA,TT1	2
* 7	PAOZZ	5305007813927	80204	B1821BH038C350N	SCREW,CAP,HEXAGON H 3/8-16 X 3.50.. UOC:TT1,UU2	3
* 8	PAOZZ	5305007252317	80204	B1821BH038C150N	SCREW,CAP,HEXAGON H 3/8-16 X 1.50.. UOC:TTA,TT1	1

END OF FIGURE

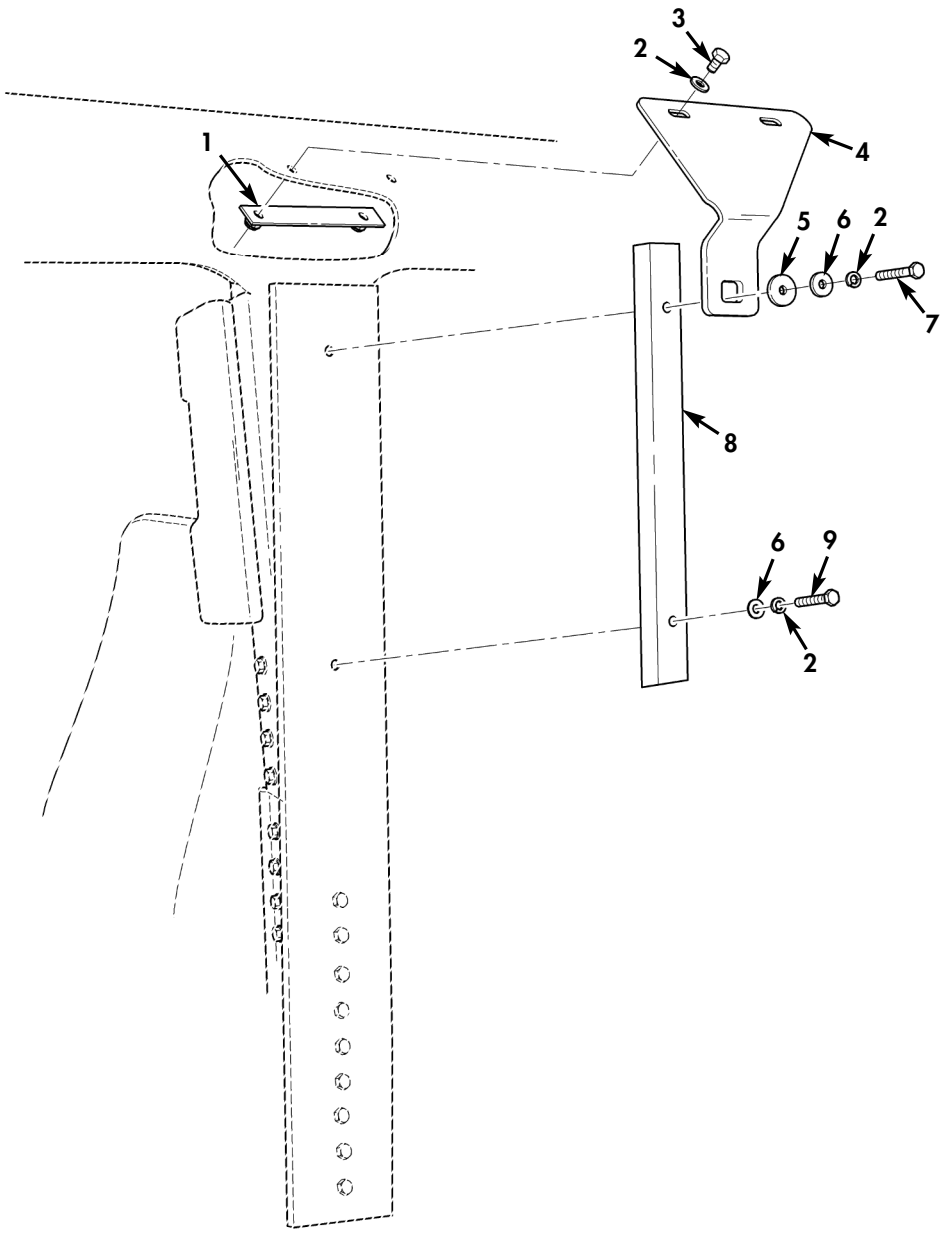

✱ QUANTITY SHOWN
REFLECTS ONE SIDE

Figure 195H. Enhanced Frag 1 B-Pillar Overlay (M1151A1/M1165A1/M1167).

(1) ITEM NO	(2) SMR CODE	(3) NSN	(4) CAGEC	(5) PART NUMBER	(6) DESCRIPTION AND USABLE ON CODES(UOC)	(7) QTY
					GROUP 1801 BODY,CAB,HOOD,AND HULL ASSEMBLY	
					FIG. 195H ENHANCED FRAG 1 B-PILLAR OVERLAY (M1151A1/M1165A1/M1167)	
* 1	PAOZZ	5340015548593	34623	6032288	PLATE,MOUNTING..... UOC:TTA,TT1,UU2	2
* 2	PAOZZ	5310009871294	19200	10910174-16	WASHER,FLAT 3/8..... UOC:TTA,TT1,UU2	8
* 3	PAOZZ	5305008213869	80204	B1821BH038C175N	SCREW,CAP,HEXAGON H 3/8-16 X 1.75.. UOC:TTA,TT1,UU2	4
* 4	PAOZZ	9515015547194	34623	6031528	ARMOR,PLATE L.H.AND R.H..... UOC:TTA,TT1,UU2	2
* 5	PAOZZ	5310012538437	19207	12340058	WASHER,FLAT 7/16..... UOC:UU2	2
* 6	PAOZZ	5310006379541	65035	P49866-11	WASHER,LOCK TOP POSITION 3/8..... UOC:TTA,TT1,UU2	4
* 7	PAOZZ	5305009908632	80204	B1821BH038C375N	SCREW,CAP,HEXAGON H 3/8-16 X 3.75.. UOC:TTA,TT1	2
* 7	PAOZZ	5305007813926	80204	B1821BH038C275N	SCREW,CAP,HEXAGON H 3/8-16 X 2.75.. UOC:UU2	2
8	PAOZZ		34623	6038370	PLATE,ARMOR R.H..... UOC:UU2	1
8	PAOZZ		34623	6038375	PLATE,ARMOR L.H..... UOC:UU2	1
* 8	PAOZZ	2540015549977	34623	6030637	ARMOR,SUPPLEMENTAL L.H OR R.H..... UOC:TTA,TT1	1
* 9	PAOZZ	5305005432866	80204	B1821BH038C250N	SCREW,CAP,HEXAGON H 3/8-16 X 2.50.. UOC:TTA,TT1	2
* 9	PAOZZ	5305007813927	80204	B1821BH038C350N	SCREW,CAP,HEXAGON H 3/8-16 X 3.50.. UOC:UU2	2

END OF FIGURE

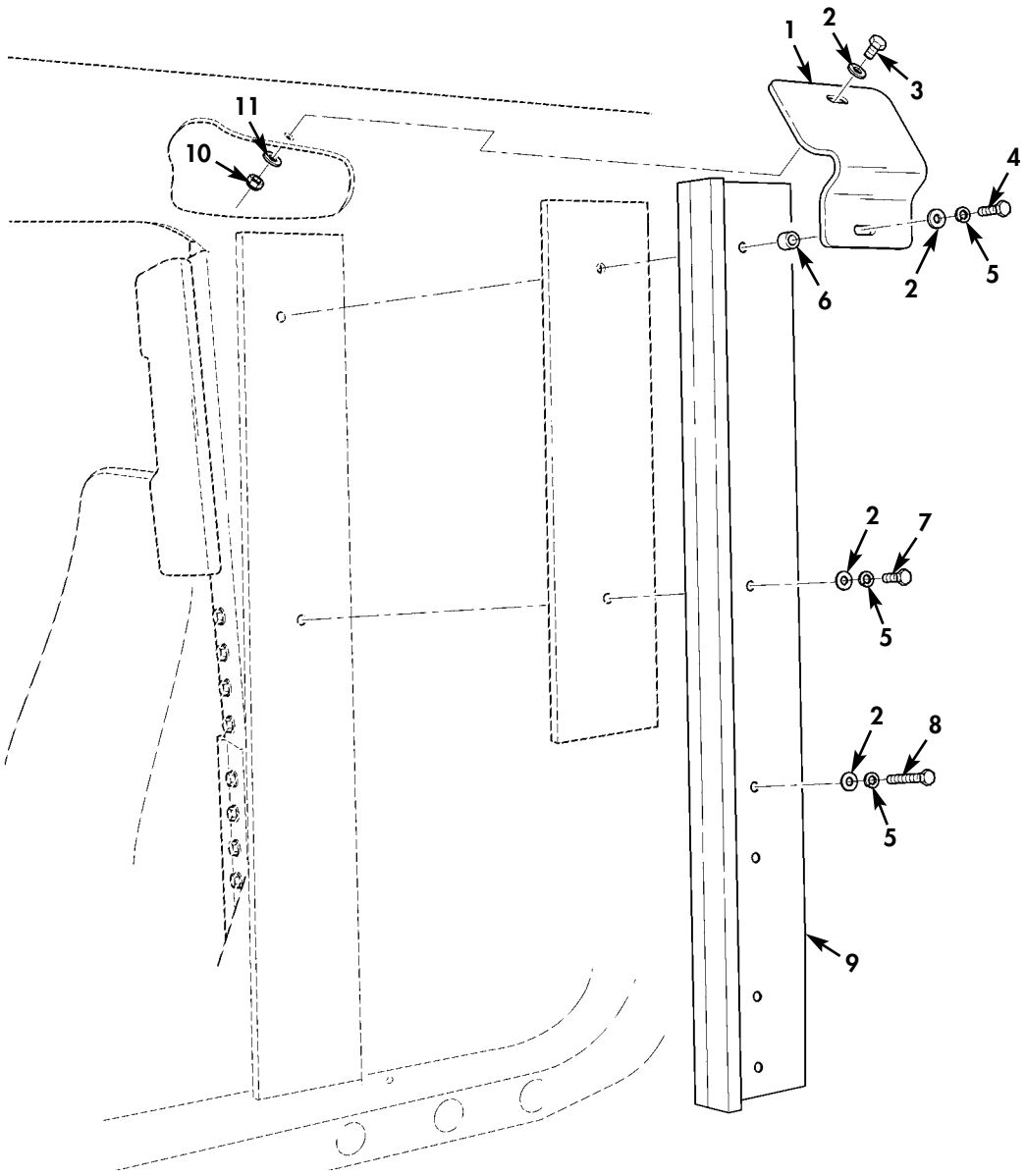

✱ QUANTITY SHOWN
REFLECTS ONE SIDE

Figure 195I. Enhanced Frag 1 B-Pillar Overlay (M1152A1).

(1) ITEM NO	(2) SMR CODE	(3) NSN	(4) CAGEC	(5) PART NUMBER	(6) DESCRIPTION AND USABLE ON CODES(UOC)	(7) QTY
					GROUP 1801 BODY,CAB,HOOD,AND HULL ASSEMBLY	
					FIG. 195I ENHANCED FRAG 1 B-PILLAR OVERLAY(M1152A1)	
* 1	PAOZZ		34623	6035666	ARMOR PLATE L.H..... UOC:UUA	1
* 1	PAOZZ		34623	6035667	ARMOR PLATE R.H..... UOC:UUA	1
* 2	PAOZZ	5310009871294	19200	10910174-16	WASHER,FLAT 3/8..... UOC:UUA	7
* 3	PAOZZ	5305008213869	80204	B1821BH038C175N	SCREW,CAP,HEXAGON H 3/8-16 X 1.75... UOC:UUA	1
* 4	PAOZZ	5305009908632	80204	B1821BH038C375N	SCREW,CAP,HEXAGON H 3/8-16 X 3.75... UOC:UUA	1
* 5	PAOZZ	5310006379541	80205	MS35338-46	WASHER,LOCK 3/8..... UOC:UUA	6
* 6	PAOZZ		34623	6035816	SPACER,SLEEVE..... UOC:UUA	1
* 7	PAOZZ	5305007829489	80204	B1821BH038C200N	SCREW,CAP,HEXAGON H 3/8-16 X 2.00... UOC:UUA	1
* 8	PAOZZ	5305007813927	80204	B1821BH038C350N	SCREW,CAP,HEXAGON H 3/8-16 X 3.50... UOC:UUA	4
* 9	PAOZZ		34623	6035716	ARMOR PLATE L.H..... UOC:UUA	1
* 9	PAOZZ		34623	6035794	ARMOR PLATE R.H..... UOC:UUA	1
* 10	PAOZZ	5310009359021	96906	MS51943-35	NUT,SELF-LOCKING,HE 3/8-16..... UOC:UUA	1
* 11	PAOZZ	5310012866077	19207	12341856	WASHER,FLAT 3/8..... UOC:UUA	1

END OF FIGURE

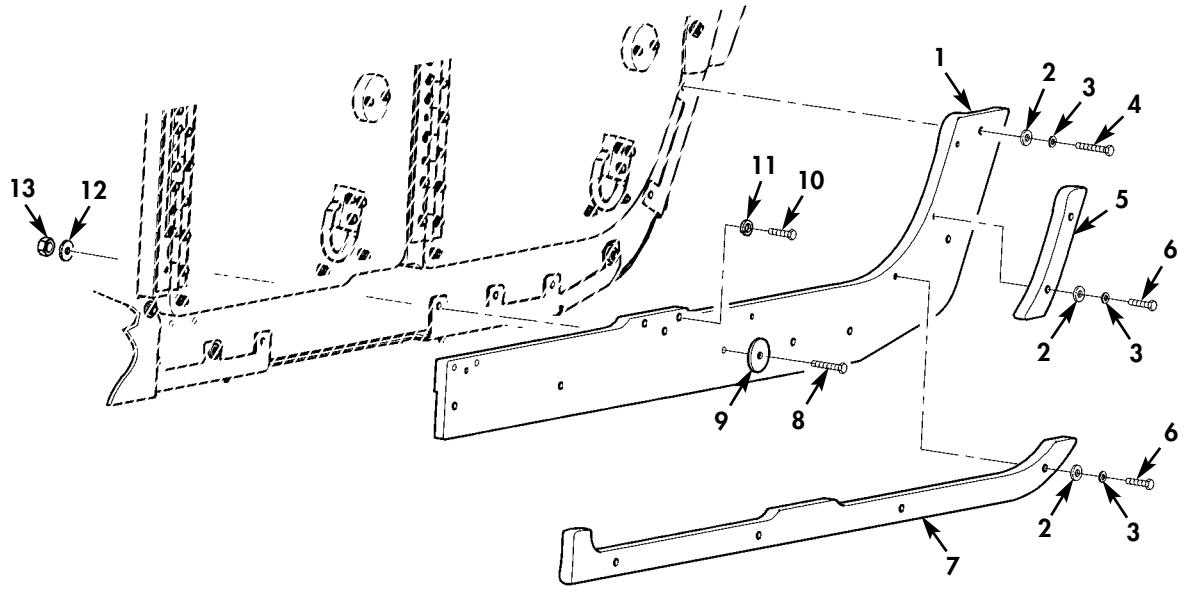

✱ QUANTITY SHOWN
REFLECTS ONE SIDE

Figure 195J. Enhanced Frag 1 Rocker Overlay.

(1) ITEM NO	(2) SMR CODE	(3) NSN	(4) CAGEC	(5) PART NUMBER	(6) DESCRIPTION AND USABLE ON CODES(UOC)	(7) QTY
					GROUP 1801 BODY,CAB,HOOD,AND HULL ASSEMBLY	
					FIG. 195J ENHANCED FRAG 1 ROCKER OVERLAY	
* 1	PAOZZ		34623	6032575	ARMOR,SUPPLEMENTAL L.H..... UOC:TTA,UU2	1
* 1	PAOZZ		34623	6032576	ARMOR,SUPPLEMENTAL R.H..... UOC:TTA,UU2	1
* 2	PAOZZ	5310009871294	19200	10910174-16	WASHER,FLAT 3/8..... UOC:TTA,UU2	7
* 3	PAOZZ	5310006379541	65035	P49866-11	WASHER,LOCK 3/8..... UOC:TTA,UU2	1
* 4	PAOZZ	5305005432866	80204	B1821BH038C250N	SCREW,CAP,HEXAGON H 3/8-16 X 2.50... UOC:TTA,UU2	1
* 5	PAOZZ		34623	6032582	ARMOR,SUPPLEMENTAL..... UOC:UU2	1
* 6	PAOZZ	5305007829489	80204	B1821BH038C200N	SCREW,CAP,HEXAGON H 3/8-16 X 2.00... UOC:TTA,UU2	6
* 7	PAOZZ		34623	6032580	ARMOR,SUPPLEMENTAL L.H..... UOC:UU2	1
* 7	PAOZZ		34623	6032581	ARMOR,SUPPLEMENTAL R.H..... UOC:UU2	1
* 8	PAOZZ	5305007813926	80204	B1821BH038C275N	SCREW,CAP,HEXAGON H 3/8-16 X 2.75... UOC:TTA	6
* 8	PAOZZ	5305005432866	80204	B1821BH038C250N	SCREW,CAP,HEXAGON H 3/8-16 X 2.50... UOC:UU2	6
* 9	PAOZZ		34623	6032616	SPACER..... UOC:UU2	6
* 10	PAOZZ	5305005434372	80204	B1821BH038C075N	SCREW,CAP,HEXAGON H 3/8-16 X 3/4.... UOC:TTA	3
* 11	PAOZZ	5310006379541	65035	P49866-11	WASHER,LOCK 3/8..... UOC:TTA	3
* 12	PAOZZ	5310012866077	19207	12341856	WASHER,FLAT 3/8..... UOC:UU2	6
* 13	PAOZZ	5310009359021	96906	MS51943-35	NUT,SELF-LOCKING,HE 3/8-16..... UOC:UU2	6

END OF FIGURE

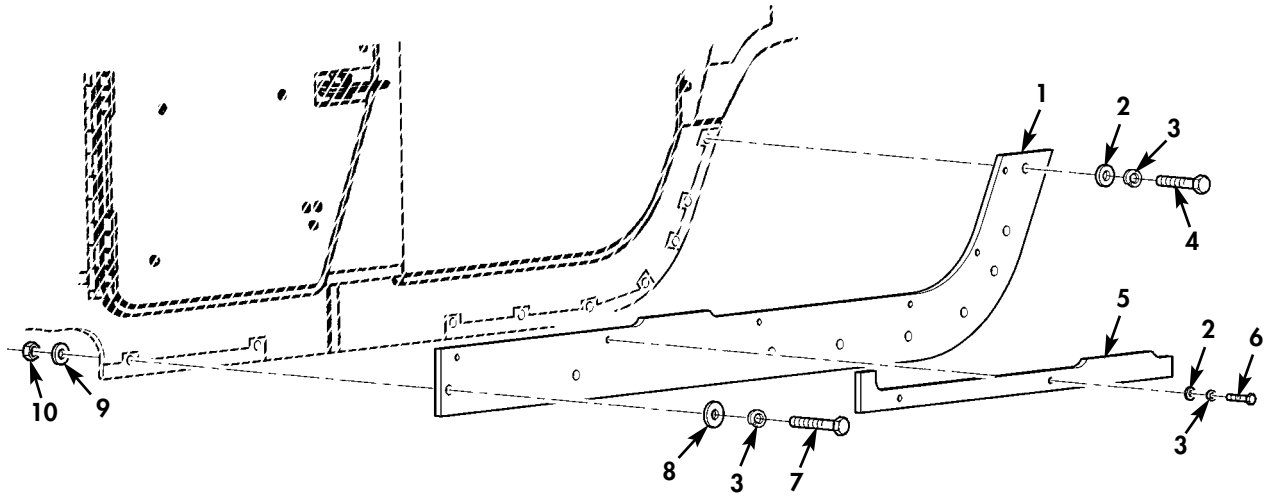

✱ QUANTITY SHOWN
REFLECTS ONE SIDE

Figure 195K. Enhanced Frag 1 Rocker Overlay (M1152A1).

(1) ITEM NO	(2) SMR CODE	(3) NSN	(4) CAGEC	(5) PART NUMBER	(6) DESCRIPTION AND USABLE ON CODES(UOC)	(7) QTY
					GROUP 1801 BODY,CAB,HOOD,AND HULL ASSEMBLY	
					FIG. 195K ENHANCED FRAG 1 ROCKER OVERLAY (M1152A1)	
* 1	PAOZZ		34623	6032575	ARMOR,SUPPLEMENTAL L.H..... UOC:UUA	1
* 1	PAOZZ		34623	6032576	ARMOR,SUPPLEMENTAL R.H..... UOC:UUA	1
* 2	PAOZZ	5310009871294	19200	10910174-16	WASHER,FLAT 3/8..... UOC:UUA	3
* 3	PAOZZ	5310006379541	80205	MS35338-46	WASHER,LOCK 3/8..... UOC:UUA	11
* 4	PAOZZ	5305007813926	80204	B1821BH038C275N	SCREW,CAP,HEXAGON H 3/8-16 X 2.75... UOC:UUA	1
* 5	PAOZZ		34623	6032807	ARMOR,SUPPLEMENTAL L.H..... UOC:UUA	1
* 5	PAOZZ		34623	6032808	ARMOR,SUPPLEMENTAL R.H..... UOC:UUA	1
* 6	PAOZZ	5305007829489	80204	B1821BH038C200N	SCREW,CAP,HEXAGON H 3/8-16 X 2.00... UOC:UUA	2
* 7	PAOZZ	5305005432866	80204	B1821BH038C250N	SCREW,CAP,HEXAGON H 3/8-16 X 2.50... UOC:UUA	8
* 8	PAOZZ		34623	6032616	SPACER..... UOC:UUA	8
* 9	PAOZZ	5310012866077	19207	12341856	WASHER,FLAT 3/8..... UOC:UUA	8
* 10	PAOZZ	5310009359021	96906	MS51943-35	NUT,SELF-LOCKING,HE 3/8-16..... UOC:UUA	8

END OF FIGURE

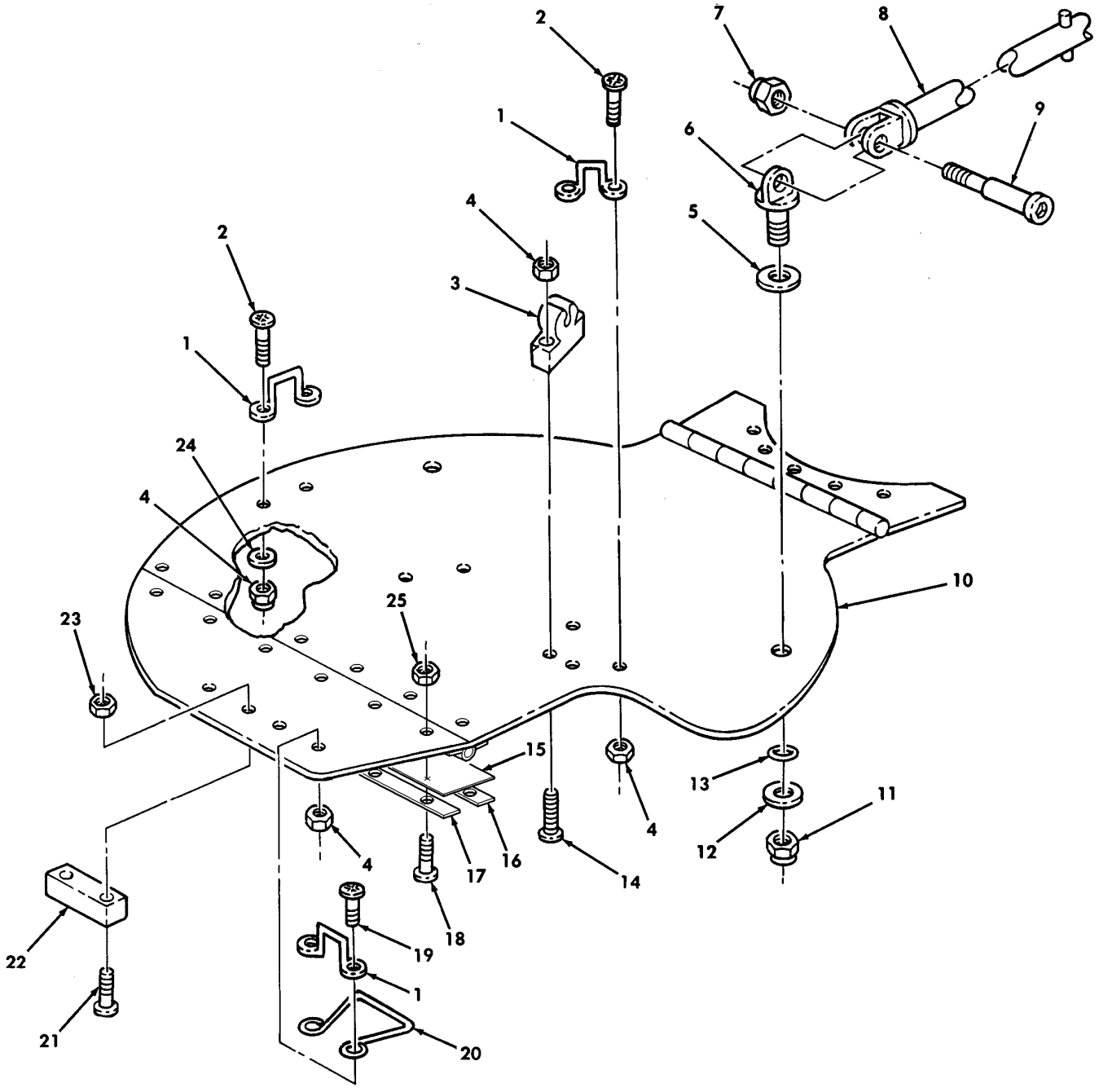

Figure 196. Turret Hatch Door and Related Parts.

(1) ITEM NO	(2) SMR CODE	(3) NSN	(4) CAGEC	(5) PART NUMBER	(6) DESCRIPTION AND USABLE ON CODES(UOC)	(7) QTY
					GROUP 1801 BODY,CAB,HOOD,AND HULL ASSEMBLY	
					FIG. 196 TURRET HATCH DOOR AND RELATED PARTS	
1	PAOZZ	5340011993499	34623	5582439	HANDLE,BOW..... UOC:XBB	3
2	PAOZZ	5305014403672	6W728	4397061-072	SCREW,MACHINE #10-32 X 1/2..... UOC:XBB	4
3	PFOZZ	5340014342840	6W728	4660150	CLIP,RETAINING..... UOC:XBB	2
4	PAOZZ	5310014373836	6W728	4397068-003	NUT,SELF-LOCKING,HE #10-32..... UOC:XBB	6
5	PAOZZ	5310014373837	6W728	4397058-023	WASHER,FLAT .750 X 1.250 X .062.... UOC:XBB	2
6	PAOZA	5340014348632	6W728	4660127	ROD,END THREADED..... UOC:XBB	2
7	PAOZZ	5310014398172	6W728	4397064-003	NUT,SELF-LOCKING,HE 5/16-18..... UOC:XBB	2
8	PAOZZ	3040014343901	6W728	4660129	CONNECTING LINK,RIG L.H..... UOC:XBB	1
8	PAOZZ		6W728	4660128	ROD,PIVOT HATCH R.H..... UOC:XBB	1
9	PAOZZ	5305014376313	6W728	4397060-030	SCREW,SHOULDER..... UOC:XBB	2
10	PFOZZ	2540014350473	6W728	4660123	DOOR,HATCH TURRET..... UOC:XBB	1
11	PAOZZ	5310014347259	6W728	4660122	NUT,PLAIN HEXAGON..... UOC:XBB	2
12	PAOZZ	5310014373838	6W728	4397057-029	WASHER,SPRING TENSI..... UOC:XBB	2
13	PAOZZ	5331014398821	6W728	4397059-016	O-RING..... UOC:XBB	2
* 14	PAOZZ	5305014342820	6W728	4397013-077	SCREW,MACHINE #10-32 X 1.00..... UOC:XBB	4
* 15	PAOZZ	5330015197029	6W728	1000370	SEAL,NONMETALLIC SP TURRET HATCH HINGE SEAL..... UOC:XBB	1
* 16	PAOZZ	5330015197016	6W728	1000368	RETAINER,SEAL LONG..... UOC:XBB	1
* 17	PAOZZ	5330015197009	6W728	1000369	RETAINER,SEAL SHORT..... UOC:XBB	1
* 18	PAOZZ	5305014307397	6W728	4397013-072	SCREW,MACHINE #10-32 X 1/2..... UOC:XBB	13
* 19	PAOZZ	5305014377295	6W728	4397061-073	SCREW,MACHINE #10-32 X 5/8..... UOC:XBB	2
* 20	PAOZZ	5340014342844	6W728	4660543	HANDLE,BOW..... UOC:XBB	1
* 21	PAOZZ	5305014339255	6W728	4397015-090	SCREW,CAP SOCKET HE 1/4-20 X 5/8... UOC:XBB	2
* 22	PAOZZ	5340014195188	39428	9306K14	BUMPER,NONMETALLIC..... UOC:XBB	1

(1) ITEM NO	(2) SMR CODE	(3) NSN	(4) CAGEC	(5) PART NUMBER	(6) DESCRIPTION AND USABLE ON CODES(UOC)	(7) QTY
* 23	PAOZZ	5310014398173	6W728	4397064-001	NUT,SELF-LOCKING,HE 1/4-20..... UOC:XBB	2
* 24	PAOZZ	5310014177333	6W728	4397005-008	WASHER,FLAT #10..... UOC:XBB	4
* 25	PAOZZ	5310014398080	6W728	4397073-003	NUT,SELF-LOCKING,HE #10-32..... UOC:XBB	13

END OF FIGURE

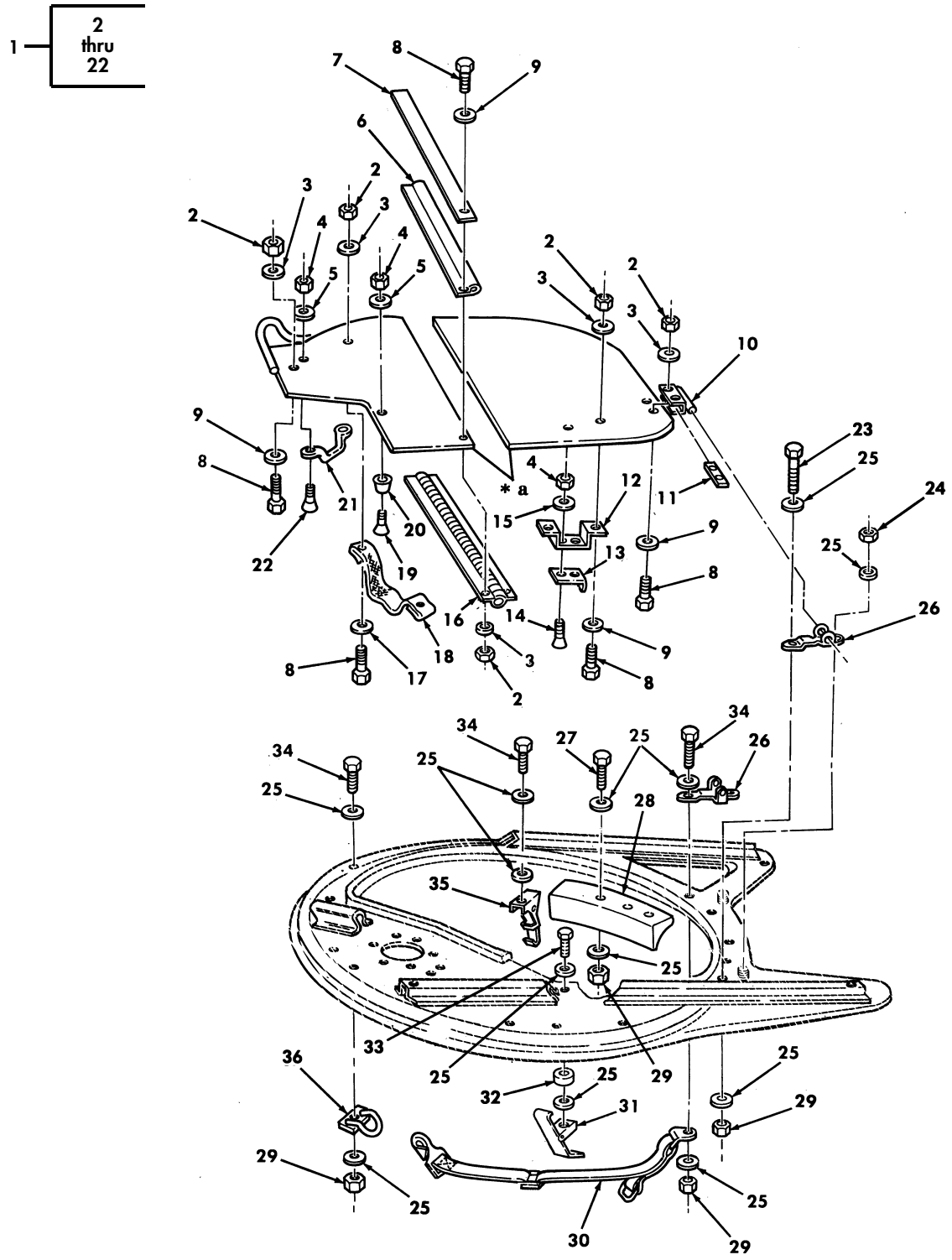

✱ **a** PART OF ITEM 1

Figure 196A. Weapon Station Hatch Assembly, Latch, Gunner's Sling, and Related Components.

(1) ITEM NO	(2) SMR CODE	(3) NSN	(4) CAGEC	(5) PART NUMBER	(6) DESCRIPTION AND USABLE ON CODES(UOC)	(7) QTY
					GROUP 1801 BODY,CAB,HOOD,AND HULL ASSEMBLY	
					FIG. 196A WEAPON STATION HATCH ASSEMBLY,LATCH,GUNNER'S SLING, AND RELATED COMPONENTS	
* 1	PAOZZ	2510012491586	19207	12340347	DOOR,HATCH,VEHICLE..... UOC:TTT	1
* 2	PAOZZ	5310000614650	96906	M45913/3-4CG8C	.NUT,SELF-LOCKING 1/4-20..... UOC:TTT,	27
* 3	PAOZZ	5310008094058	96906	MS27183-10	.WASHER,FLAT 1/4..... UOC:TTT	27
* 4	PAOZZ	5310002081918	72962	SN-104NM-22	.NUT,SELF-LOCKING #10-24..... UOC:TTT	12
* 5	PAOZZ	5310012538951	34623	5593294	.WASHER,FLAT #10..... UOC:TTT	8
* 6	PAOZZ	5330012584664	19207	12340122	.SEAL,NONMETALLIC SP..... UOC:TTT	1
* 7	PFOZZ	2590012589491	19207	12340123	.MOLDING,METAL..... UOC:TTT	1
* 8	PAOZZ	5305003900524	96906	MS51849-98	.SCREW,MACHINE 1/4-20 X 1.00..... UOC:TTT	27
* 9	PAOZZ	5310011023270	24617	2436161	.WASHER,FLAT 1/4..... UOC:TTT	25
* 10	PAOZZ	2510012532839	19207	12340126	.HINGE,DOOR,VEHICULAR..... UOC:TTT	2
* 11	PFOZZ	5365012538975	19207	12340098	.SPACER,RING..... UOC:TTT	2
* 12	PFOZZ	5340012538377	19207	12340124	.BRACKET,MULTIPLE AN..... UOC:TTT	1
* 13	PAOZZ	5340012116288	19207	12340096	.STRIKER,CATCH..... UOC:TTT	2
* 14	PAOZZ	5305011981621	7X677	156971	.SCREW,MACHINE..... UOC:TTT	2
* 15	PAOZZ	5310000145850	96906	MS27183-42	.WASHER,FLAT #10..... UOC:TTT	4
* 16	PAOZZ	2510012541056	19207	12340091	.HINGE,DOOR,VEHICULAR..... UOC:TTT	1
* 17	PAOZZ	5310011992293	7X677	9421394	.WASHER,FLAT 1/4..... UOC:TTT	2
* 18	PAOZZ	5340012564656	31272	45057-10	.STRAP,WEBBING..... UOC:TTT	1
* 19	PAOZZ	5305009846214	80205	MS35206-267	.SCREW,MACHINE #10-24 X 1.00..... UOC:TTT	2
* 20	PAOZZ	5340012038675	34623	5579257	.BUMPER,NONMETALLIC..... UOC:TTT	3
* 21	PAOZZ	5340011993499	34623	5582439	.HANDLE,BOW..... UOC:TTT	3
* 22	PAOZZ	5305012542452	34623	5593286	.SCREW,MACHINE #10-24 X 1.00..... UOC:TTT	6
* 23	PAOZZ	5305007813926	80204	B1821BH038C275N	SCREW,CAP,HEXAGON H 3/8-16 X 2.75.. UOC:TTT	4

(1) ITEM NO	(2) SMR CODE	(3) NSN	(4) CAGEC	(5) PART NUMBER	(6) DESCRIPTION AND USABLE ON CODES(UOC)	(7) QTY
* 24	PAOZZ	5310008140672	96906	MS51943-36	NUT,SELF-LOCKING 3/8-24..... UOC:TTT	2
* 25	PAOZZ	5310000806004	96906	MS27183-14	WASHER,FLAT 3/8..... UOC:TTT	20
* 26	PFOZZ	3040011978727	19207	12446767	BRACKET,EYE ROT..... UOC:TTT	2
* 27	PAOZZ	5305008465703	80204	B1821BH038C300N	SCREW,CAP,HEXAGON H 3/8-16 X 3.00.. UOC:TTT	1
* 28	PAOZZ	2590012047836	19207	12340313	PAD,CUSHIONING..... UOC:TTT	2
* 29	PAOZZ	5310009359021	96906	MS51943-35	NUT,SELF-LOCKING 3/8-16..... UOC:TTT	7
* 30	PAOZZ	5340011994989	19207	12340649	STRAP,WEBBING..... UOC:TTT	1
* 31	PAOZZ	5340014342864	31272	12340648	LATCH,RIM R.H..... UOC:TTT	1
* 32	PAOZZ	5365012120144	34623	5591575	SPACER,PLATE..... UOC:TTT	1
* 33	PAOZZ	5305000680511	80204	B1821BH038C125N	SCREW,CAP,HEXAGON H 3/8-16 X 1.25.. UOC:TTT	1
* 34	PAOZZ	5305005432866	80204	B1821BH038C250N	SCREW,CAP,HEXAGON H 3/8-16 X 2.50.. UOC:TTT	4
* 35	PAOZZ	5340012042543	31272	45307-10	CATCH,CLAMPING LEFT..... UOC:TTT	2
* 36	PAOZZ	2590011974899	19207	12340293	HOOK,GUNNER'S SLING..... UOC:TTT	1

END OF FIGURE

6 — 7 thru 19

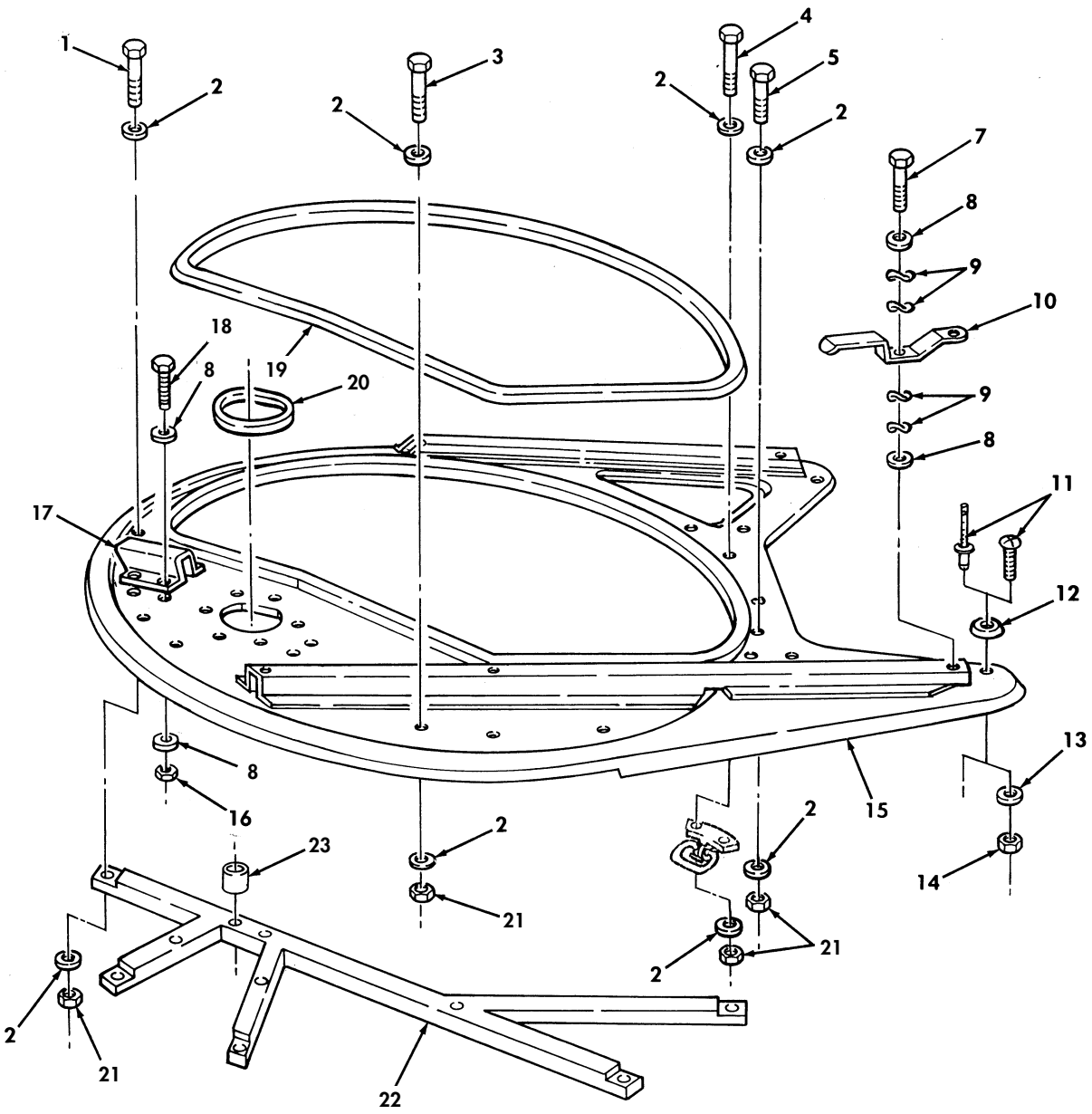

Figure 196B. Weapon Station Tray Assembly, Reinforcement Tube, and Related Components.

(1) ITEM NO	(2) SMR CODE	(3) NSN	(4) CAGEC	(5) PART NUMBER	(6) DESCRIPTION AND USABLE ON CODES(UOC)	(7) QTY
					GROUP 1801 BODY,CAB,HOOD,AND HULL ASSEMBLY	
					FIG. 196B WEAPON STATION TRAY ASSEMBLY,REINFORCEMENT TUBE,AND RELATED COMPONENTS	
* 1	PAOZZ	5305009908632	80204	B1821BH038C375N	SCREW,CAP,HEXAGON H 3/8-16 X 3.75.. UOC:TTT	1
* 2	PAOZZ	5310000806004	96906	MS27183-14	WASHER,FLAT 3/8..... UOC:TTT	8
* 3	PAOZZ	5305007252317	80204	B1821BH038C150N	SCREW,CAP,HEXAGON H 3/8-16 X 1.50.. UOC:TTT	1
* 4	PAOZZ	5305007813926	80204	B1821BH038C275N	SCREW,CAP,HEXAGON H 3/8-16 X 2.75.. UOC:TTT	2
* 5	PAOZZ	5305005432866	80204	B1821BH038C250N	SCREW,CAP,HEXAGON H 3/8-16 X 2.50.. UOC:TTT	1
* 6	PAOZZ	2590014667250	34623	5715976G1	TRAY,WEAPON,VEHICUL..... UOC:TTT	1
* 7	PAOZZ	5306002264826	80204	B1821BH031C088N	.BOLT,MACHINE 5/16-18 X 7/8..... UOC:TTT	2
* 8	PAOZZ	5310000814219	96906	MS27183-12	.WASHER,FLAT 5/16..... UOC:TTT	12
* 9	PAOZZ	5310012033230	73281	B0625-22-S	.WASHER,SPRING TENSI 5/16..... UOC:TTT	8
* 10	PAOZZ	3040011987473	19207	12340111	.LEVER,MANUAL CONTRO..... UOC:TTT	2
* 11	PAOZZ	5305009846194	80205	MS35206-246	.SCREW,MACHINE #8-32 X 5/8..... UOC:TTT	2
* 12	PAOZZ	5340005655378	70485	698W	.BUMPER,NONMETALLIC..... UOC:TTT	2
* 13	PAOZZ	5310012531618	96906	MS51412-18	.WASHER,FLAT #8..... UOC:TTT	2
* 14	PAOZZ	5310008071466	80205	MS21042-08	.NUT,SELF-LOCKING #8-32..... UOC:TTT	2
* 15	XAOZZ		19207	12340336	.TRAY ASSEMBLY,WEAP..... UOC:TTT	1
* 16	PAOZZ	5310002416658	81349	M45913/3-5FG8C	.NUT,SELF-LOCKING 5/16-24..... UOC:TTT	4
* 17	PAOZZ	5340014571778	19207	12446730	.HANDLE,BOW..... UOC:TTT	1
* 18	PAOZZ	5306002264824	80204	B1821BH031C063N	.BOLT,MACHINE 5/16-18 X 5/8..... UOC:TTT	4
* 19	PAOZZ	5330012028360	77824	1301	.SEAL,NONMETALLIC SP..... UOC:TTT	1
* 20	PAOZZ	5330012058607	19207	12340103-2	TRIM,EDGE 15.39 TO 15.65 INCHES LONG..... UOC:TTT	1
* 21	PAOZZ	5310009359021	96906	MS51943-35	NUT,SELF-LOCKING 3/8-16..... UOC:TTT	4
* 22	PAOZZ	4710011899727	19207	12340337	TUBE ASSEMBLY,WEAPON..... UOC:TTT	1
* 23	PAOZZ	5365014578947	19207	12460208	SPACER,SPECIAL SHAPE..... UOC:TTT	5

END OF FIGURE

UNIT, DIRECT SUPPORT, AND GENERAL SUPPORT MAINTENANCE
REPAIR PARTS AND SPECIAL TOOLS LIST

TRUCK, UTILITY: S250 SHELTER CARRIER, 4X4, M1113 (2320-01-412-0143),
TRUCK, UTILITY: UP-ARMORED CARRIER, 4X4, M1114 (2320-01-413-3739),
TRUCK, UTILITY: EXPANDED CAPACITY, ARMAMENT CARRIER, 4X4, M1151 (2320-01-518-7330),
TRUCK, UTILITY: EXPANDED CAPACITY, ENHANCED, 4X4, M1152 (2320-01-518-7332)

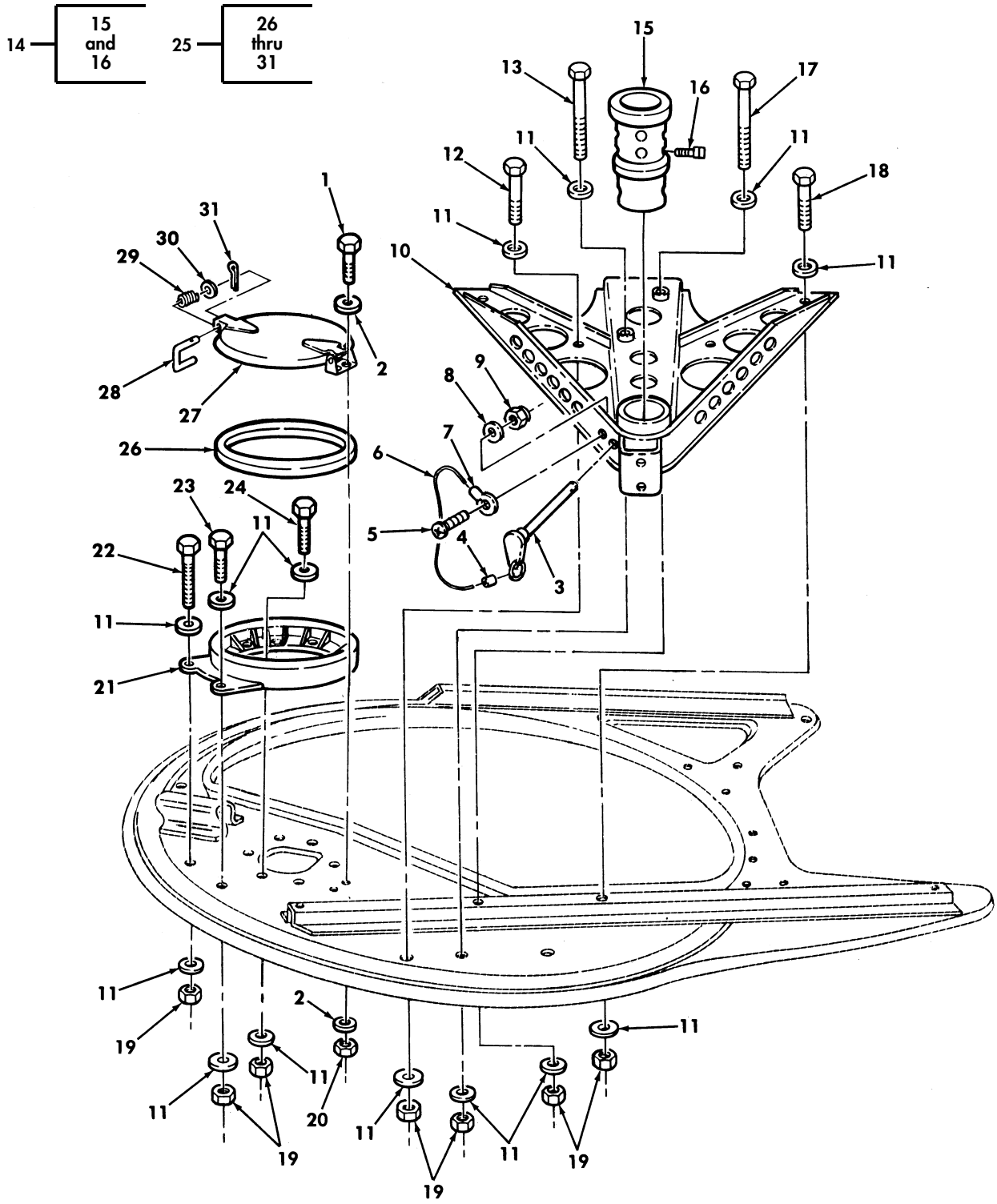

Figure 196C. Armament Pintle and Panel Assemblies and Related Parts.

(1) ITEM NO	(2) SMR CODE	(3) NSN	(4) CAGEC	(5) PART NUMBER	(6) DESCRIPTION AND USABLE ON CODES(UOC)	(7) QTY
					GROUP 1801 BODY,CAB,HOOD,AND HULL ASSEMBLY	
					FIG. 196C ARMAMENT PINTLE AND PANEL ASSEMBLIES AND RELATED PARTS	
* 1	PAOZZ	5305000687837	80204	B1821BH025C063N	SCREW,CAP,HEXAGON H 1/4-20 X 5/8... UOC:TTT	4
* 2	PAOZZ	5310011023270	24617	2436161	WASHER,FLAT 1/4..... UOC:TTT	4
* 3	PAOZA	5315001502793	80205	MS17986-C840	PIN,QUICK RELEASE..... UOC:TTT	1
* 4	PAOZZ	4030011420456	96906	MS51844-63	SWAGGING SLEEVE,WI..... UOC:TTT	1
* 5	PAOZZ	5305009846195	80205	MS35206-247	SCREW,MACHINE #8-32 X 3/4..... UOC:TTT	1
* 6	MOOZZ		81349	MIL-W-83420/14	ROPE,WIRE MAKE FROM ROPE,WIRE P/N MIL-W-83420/2-002,14 INCHES LONG.... UOC:TTT	1
* 7	PAOZZ	4030001329181	96906	MS20668-4	TERMINAL,WIRE ROPE..... UOC:TTT	1
* 8	PAOZZ	5310012531618	96906	MS51412-18	WASHER,FLAT #8..... UOC:TTT	1
* 9	PAOZZ	5310008071466	80205	MS21042-08	NUT,SELF-LOCKING #8-32..... UOC:TTT	1
* 10	PAOZZ	1005014856411	19207	12469429	MOUNT,MACHINE GUN..... UOC:TTT	1
* 11	PAOZZ	5310000806004	96906	MS27183-14	WASHER,FLAT 3/8..... UOC:TTT	28
* 12	PAOZZ	5305008576886	80204	B1821BH038C450N	SCREW,CAP,HEXAGON H 3/8-16 X 4.50.. UOC:TTT	1
* 13	PAOZZ	5305014753154	80204	B1821BH038C700N	SCREW,CAP,HEXAGON H 3/8-16 X 7.00.. UOC:TTT	1
* 14	PAOZZ	3120011885082	19207	12340310	BEARING,SLEEVE..... UOC:TTT	1
* 15	XAOZZ		19207	12340310-1	.ADAPTER,PINTLE..... UOC:TTT	1
* 16	PAOZZ	5305012044190	7X677	9428747	.SETSCREW 3/8-24..... UOC:TTT	1
* 17	PAOZZ	5305014753364	80204	B1821BH038C750N	SCREW,CAP,HEXAGON H 3/8-16 X 7.50.. UOC:TTT	1
* 18	PAOZZ	5305014581670	80204	B1821BH038C550N	SCREW,CAP,HEXAGON H 3/8-16 X 5.50.. UOC:TTT	3
* 19	PAOZZ	5310009359021	96906	MS51943-35	NUT,SELF-LOCKING 3/8-16..... UOC:TTT	14
* 20	PAOZZ	5310000614650	96906	M45913/3-4CG8C	NUT,SELF-LOCKING 1/4-20..... UOC:TTT	2
* 21	PAOZZ	2590011899736	19207	12339679-1	PEDESTAL ASSEMBLY,T..... UOC:TTT	1
* 22	PAOZZ	5305009908632	80204	B1821BH038C375N	SCREW,CAP,HEXAGON H 3/8-16 X 3.75.. UOC:TTT	5
* 23	PAOZZ	5305005432866	80204	B1821BH038C250N	SCREW,CAP,HEXAGON H 3/8-16 X 2.50.. UOC:TTT	1

(1) ITEM NO	(2) SMR CODE	(3) NSN	(4) CAGEC	(5) PART NUMBER	(6) DESCRIPTION AND USABLE ON CODES(UOC)	(7) QTY
* 24	PAOZZ	5305000680510	05047	B1821BH038C100N	SCREW,CAP,HEXAGON H 3/8-16 X 1.00.. UOC:TTT	2
* 25	PAOZZ	2510011899828	19207	12340311	DOOR,HATCH,VEHICLE..... UOC:TTT	1
* 26	PAOZZ	5330012701353	19207	12340117	.DISK,SOLID,PLAIN..... UOC:TTT	1
* 27	PAOZZ	2510013102324	34623	5582436	.DOOR,HATCH,VEHICLE..... UOC:TTT	1
* 28	PAOZZ	2510012573747	19207	12340104	.ROD,HOOD,VEHICULAR..... UOC:TTT	1
* 29	PAOZZ	5360009028068	96906	MS24585-281	.SPRING,HELICAL,COMP..... UOC:TTT	1
* 30	PAOZZ	5310011023270	24617	2436161	.WASHER,FLAT 1/4..... UOC:TTT	1
* 31	PAOZZ	5315008392326	80205	MS24665-281	.PIN,COTTER 3/32 X 1/2..... UOC:TTT	1

END OF FIGURE

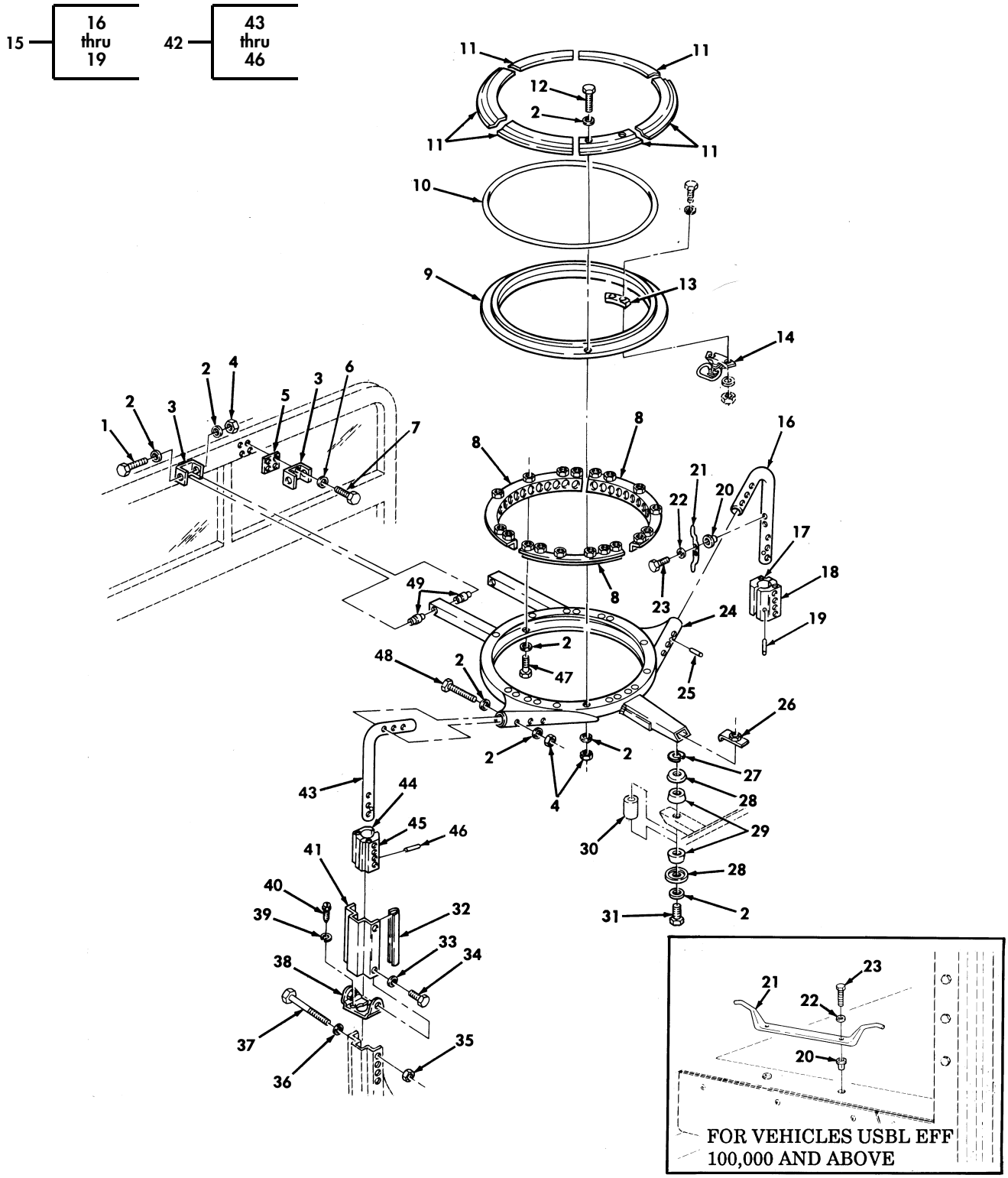

Figure 196D. Turret Support Ring Assembly.

(1) ITEM NO	(2) SMR CODE	(3) NSN	(4) CAGEC	(5) PART NUMBER	(6) DESCRIPTION AND USABLE ON CODES(UOC)	(7) QTY
					GROUP 1801 BODY,CAB,HOOD,AND HULL ASSEMBLY	
					FIG. 196D TURRET SUPPORT RING ASSEMBLY	
* 1	PAOZZ	5305008576886	80204	B1821BH038C450N	SCREW,CAP,HEXAGON H 3/8-16 X 4.50.. UOC:TTT	2
* 2	PAOZZ	5310000806004	96906	MS27183-14	WASHER,FLAT 3/8..... UOC:TTT	47
* 3	PAOZZ	2510012526240	19207	12340116	FRAME SECTION STRUC..... UOC:TTT	2
* 4	PAOZZ	5310009359021	96906	MS51943-35	NUT,SELF-LOCKING 3/8-16..... UOC:TTT	20
* 5	PAOZZ	5365011954949	19207	12340099-1	SPACER,PLATE 0.125..... UOC:TTT	2
* 5	PAOZZ	5365012554990	34623	5596642	SPACER,PLATE 0.030..... UOC:TTT	2
* 5	PAOZZ	5365012554991	34623	5596643	SPACER,PLATE 0.060..... UOC:TTT	2
* 5	PAOZZ	5365012554633	34623	5596644	SPACER,PLATE 0.090..... UOC:TTT	2
* 5	PAOZZ	5365012554634	34623	5596645	SPACER,PLATE 0.190..... UOC:TTT	2
* 6	PAOZZ	5310011191024	24617	2436162	WASHER,FLAT 5/16..... UOC:TTT	8
* 7	PAOZZ	5306002264826	80204	B1821BH031C088N	BOLT,MACHINE 5/16-18 X 7/8..... UOC:TTT	8
* 8	PAOZZ	2590011924525	19207	EC12340298	RING,TURRET LOCK..... UOC:TTT	2
* 9	PAOZZ	3110014805857	0LJJ1	12470153-1	BEARING ASSEMBLY,TU..... UOC:TTT	1
* 10	PAOZZ	5330012822213	28666	MT161A	SEAL,NONMETALLIC SP..... UOC:TTT	1
* 11	PAOZZ	5340014575571	19207	12460290	BRACKET,DOUBLE ANGL..... UOC:TTT	12
* 12	PAOZZ	5305007813926	80204	B1821BH038C275N	SCREW,CAP,HEXAGON H 3/8-16 X 2.75.. UOC:TTT	12
* 13	PFOZZ	5365012544394	19207	12340115-1	SPACER,PLATE 0.050 THICK..... UOC:TTT	1
* 13	PFOZZ	5365014573364	19207	12340115-2	SPACER,PLATE 0.160 THICK..... UOC:TTT	1
* 14	PAOZZ	5340012538933	31272	45460-10	LOCK SET,RIM..... UOC:TTT	1
* 15	PFOZZ	4710013357253	19207	12340342-6	TUBE,BENT METALLIC R.H..... UOC:TTT	1
* 16	XAOZZ		19207	12340342-4	.SUPPORT UPPER "B" PILLAR,R.H..... UOC:TTT	1
* 17	PFOZZ	2510012571572	19207	12340090-1	.FRAME SECTION,STRUC "B" PILLAR FRONT..... UOC:TTT	1
* 18	PFOZZ	2510012668013	19207	12340090-2	.FRAME SECTION,STRUC "B" PILLAR REAR.....	1

(1) ITEM NO	(2) SMR CODE	(3) NSN	(4) CAGEC	(5) PART NUMBER	(6) DESCRIPTION AND USABLE ON CODES(UOC)	(7) QTY
					UOC:TTT	
* 19	PAOZZ	5315011733397	34623	9412281	.PIN,SPRING.....	2
					UOC:TTT	
* 20	PAOZZ	5310011981722	34623	5982526	NUT,PLAIN,BLIND RIV 1/4-20.....	2
					UOC:TTT	
* 21	PAOZZ	2540011929718	19207	12340301	CLEAT,STOWAGE.....	1
					UOC:TTT	
* 22	PAOZZ	5310011023270	24617	2436161	WASHER,FLAT 1/4.....	2
					UOC:TTT	
* 23	PAOZZ	5305002253843	80204	B1821BH025C100N	SCREW,CAP,HEXAGON H 1/4-20 X 1.00..	2
					UOC:TTT	
* 24	PFOZZ	2540011853113	19207	12340334	SUPPORT ASSEMBLY,WE.....	1
					UOC:TTT	
* 25	PAOZZ	5315011960277	7X677	456369	PIN,SPRING.....	2
					UOC:TTT	
* 26	PFOZZ	2540011940197	19207	12339562	PLATE ASSEMBLY,ROOF REAR SUPPORT...	1
					UOC:TTT	
* 27	PAOZZ	5310012122303	34623	5591507	WASHER,SLOTTED.....	4
					UOC:TTT	
* 28	PFOZZ	2540011925949	19207	12339561	PLATE,SNUBBER,VEH REAR SUPPORT.....	2
					UOC:TTT	
* 29	PAOZZ	5340012110838	34623	5584891	MOUNT,RESIELIENT.....	2
					UOC:TTT	
* 30	PFOZZ	5365012160364	19207	12338186-52	SPACER,SLEEVE .407 ID X .625 OD X 2.250 INCHES LONG.....	1
					UOC:TTT	
* 31	PAOZZ	5305007813927	80204	B1821BH038C350N	SCREW,CAP,HEXAGON H 3/8-16 X 3.50 USE WITH 0-2 SHIMS.....	1
					UOC:TTT	
* 31	PAOZZ	5305009908632	80204	B1821BH038C375N	SCREW,CAP,HEXAGON H 3/8-16 X 3.75 USE WITH 3-5 SHIMS.....	1
					UOC:TTT	
* 31	PAOZZ	5305007813928	80204	B1821BH038C400N	SCREW,CAP,HEXAGON H 3/8-16 X 4.00 USE WITH 6-7 SHIMS.....	1
					UOC:TTT	
* 32	PAOZZ	2590014608320	19207	12340103-3	BEZEL,AUTOMOTIVE TR L.H. 11.13 INCHES LONG.....	2
					UOC:TTT	
* 32	PAOZZ	2590014579922	19207	12340103-4	BEZEL,AOTOMOTIVE,TR R.H.,8.25 INCHES LONG.....	2
					UOC:TTT	
* 33	PAOZZ	5310008144219	96906	MS27183-12	WASHER,FLAT 5/16.....	6
					UOC:TTT	
* 34	PAOZZ	5305009845675	80205	MS35206-295	SCREW,MACHINE 5/16-18 X 5/8.....	6
					UOC:TTT	
* 35	PAOZZ	5310002416658	81349	M45913/3-5FG8C	NUT,SELF-LOCKING 5/16-24.....	8
					UOC:TTT	
* 36	PAOZZ	5310011946459	19207	12339724	WASHER,FLAT 5/16.....	8
					UOC:TTT	
* 37	PAOZZ	5306002928253	88044	AN5H41	BOLT,MACHINE 5/16-24 X 4.21.....	8
					UOC:TTT	
* 38	PFOZZ	5340011960572	34623	5584032	BRACKET,MOUNTING.....	2
					UOC:TTT	

(1) ITEM NO	(2) SMR CODE	(3) NSN	(4) CAGEC	(5) PART NUMBER	(6) DESCRIPTION AND USABLE ON CODES(UOC)	(7) QTY
* 39	PAOZZ	5310005845272	02978	ERNA245	WASHER,LOCK #10..... UOC:TTT	4
* 40	PAOZZ	5305008550957	80205	NASM24629-46	SCREW,TAPPING #10-32 X .500..... UOC:TTT	4
* 41	PFOZZ	2540011925937	19207	12340338	COVER,PILLAR..... UOC:TTT	2
* 42	PFOZZ	4710013335995	19207	12340342-5	TUBE,BENT METALLIC UPPER "B" PILLAR UOC:TTT	2
* 43	XAOZZ		19207	12340342-3	.SUPPORT UPPER "B" PILLAR,L.H..... UOC:TTT	1
* 44	PFOZZ	2510012668013	19207	12340090-2	.FRAME SECTION,STRUC "B" PILLAR.... REAR UOC:TTT	1
* 45	PFOZZ	2510012571572	19207	12340090-1	.FRAME SECTION,STRUC "B" PILLAR FRONT..... UOC:TTT	1
* 46	PAOZZ	5315011733397	34623	9412281	.PIN,SPRING..... UOC:TTT	2
* 47	PAOZZ	5305000680510	05047	B1821BH038C100N	SCREW,CAP,HEXAGON H 3/8-16 X 1.00.. UOC:TTT	18
* 48	PAOZZ	5305008465703	80204	B1821BH038C300N	SCREW,CAP,HEXAGON H 3/8-16 X 3.00.. UOC:TTT	6
* 49	PAOZZ	5340011976755	34623	EC12338083	MOUNT,RESILIENT FRONT SUPPORT MOUNTING CLEVIS..... UOC:TTT	4

END OF FIGURE

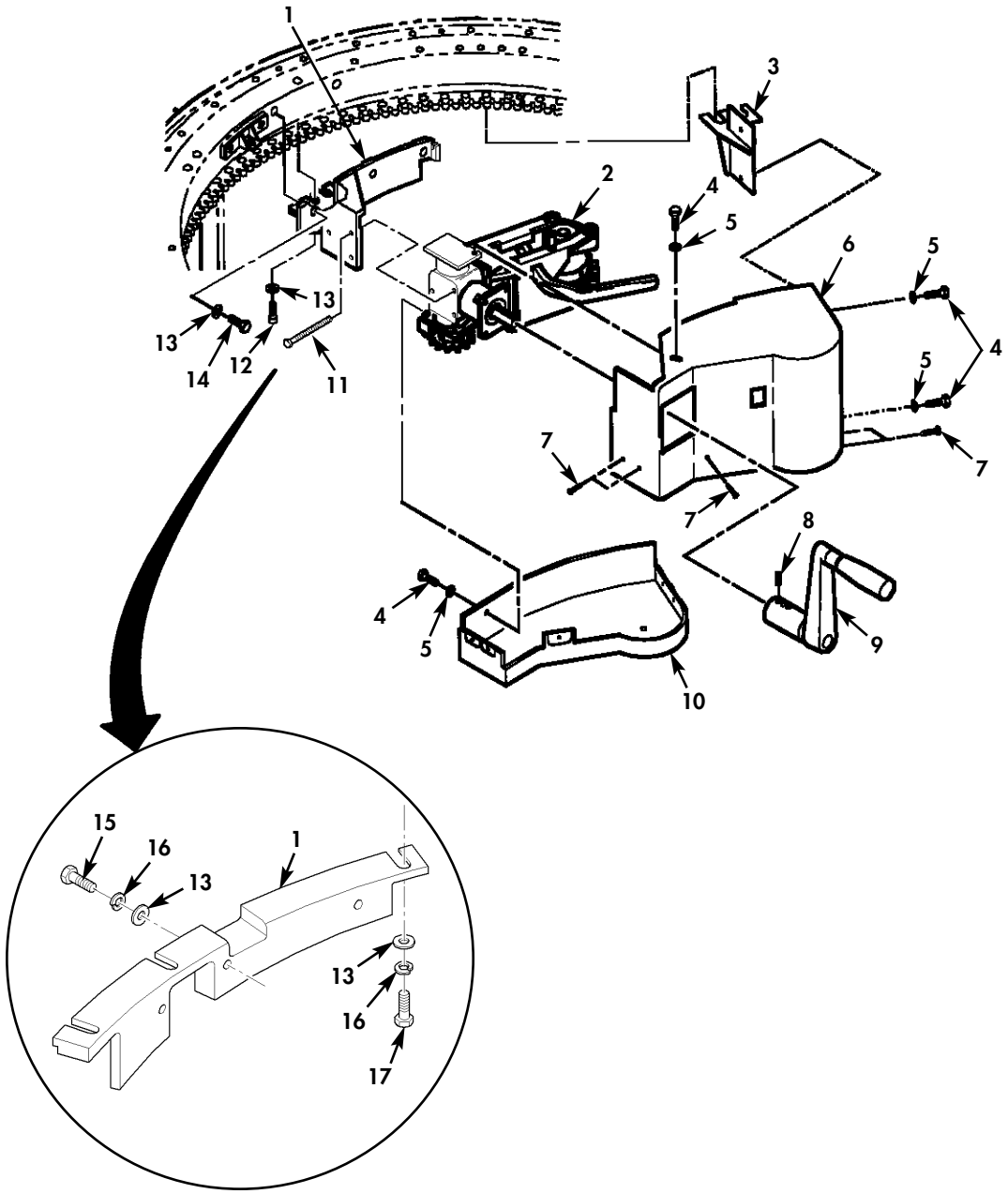

Figure 196E. Traversing Assembly.

(1) ITEM NO	(2) SMR CODE	(3) NSN	(4) CAGEC	(5) PART NUMBER	(6) DESCRIPTION AND USABLE ON CODES(UOC)	(7) QTY
					GROUP 1801 BODY,CAB,HOOD,AND HULL ASSEMBLY	
					FIG. 196E TRAVERSING ASSEMBLY	
* 1	PAOZZ		6W728	4662403-002	BRACKET,MOUNTING TRAVERSING GEAR PART OF KIT P/N 4662400-003..... UOC:XBB	1
* 1	PAOZZ		6W728	6432260-01M1	BRACKET,MOUNTING TRAVERSING GEAR PART OF KIT P/N 6433328..... UOC:TTT	1
* 2	PAOZZ		6W728	4662402-003	ASSEMBLY,TRAVERSING PART OF KIT P/N 4662400-003..... UOC:TTT,XBB	1
* 3	PAOZZ		6W728	4662416-002	BRACKET,FRONT COVE PART OF KIT P/N 4662400-003..... UOC:TTT,XBB	1
* 4	PAOZZ	5306014339180	6W728	4397000-005	SCREW,CAP,HEXAGON H 1/4-20 X .625 PART OF KIT P/N 6431780..... UOC:TTT,XBB	4
* 5	PAOZZ	5306014357784	6W728	4397005-010	WASHER,FLAT 1/4 PART OF KIT P/N 6431780..... UOC:TTT,XBB	4
* 6	PAOZZ		6W728	4662414-001	COVER,TRAVERSING U UPPER PART OF KIT P/N 4662400-003..... UOC:TTT,XBB	1
* 7	PAOZZ	5305015135711	6W728	4397054-032	SCREW,MACHINE #10-32 X .625 PART OF KIT P/N 6431780..... UOC:TTT,XBB	6
* 8	PAOZZ		6W728	6431807-118	SCREW,SET 1/4-20 PART OF KIT P.N 4662400-003..... UOC:TTT,XBB	3
* 9	PAOZZ	5340015360999	6W728	6431768-002	HANDLE ASSEMBLY TRAVERSING GEAR PART OF KIT P/N 4662400-003..... UOC:TTT,XBB	1
* 10	PAOZZ		6W728	4662418-002	COVER,TRAVERSING U LOWER PART OF KIT P/N 4662400-003..... UOC:TTT,XBB	1
* 11	PAOZZ	5306014339188	6W728	4397000-017	SCREW,CAP,HEX HD 1/4-20 X 2.75 PART OF KIT P/N 4662400-003..... UOC:TTT,XBB	1
* 12	PAOZZ	5306014343284	6W728	4397011-070	SCREW,CAP,HEXAGON H 3/8-24 X 3.00 PART OF KIT P/N 6431780..... UOC:TTT,XBB	1
* 13	PAOZZ	5310014192413	6W728	4397005-014	WASHER,FLAT PART OF KIT P/N 6431780 UOC:TTT,XBB	3
* 14	PAOZZ	5305015135667	6W728	4397000-059	SCREW,MACHINE 3/8-16 X .825 PART OF KIT P/N 6431780..... UOC:TTT,XBB	2
* 15	PAOZZ	5306014339196	6W728	4397000-060	SCREW,CAP,HEXAGON H 3/8-16 X 1.00 PART OF KIT P/N 6433328..... UOC:TTT	3
* 16	PAOZZ	5310014177273	6W728	4397004-008	WASHER,LOCK 3/8 PART OF KIT P/N 6433328.....	6

(1) ITEM NO	(2) SMR CODE	(3) NSN	(4) CAGEC	(5) PART NUMBER	(6) DESCRIPTION AND USABLE ON CODES(UOC)	(7) QTY
* 17	PAOZZ		6W728	4397001-068	SCREW,CAP,HEXAGON H 3/8-24 X 2.50 PART OF KIT P/N 6433328..... UOC:TTT	3

END OF FIGURE

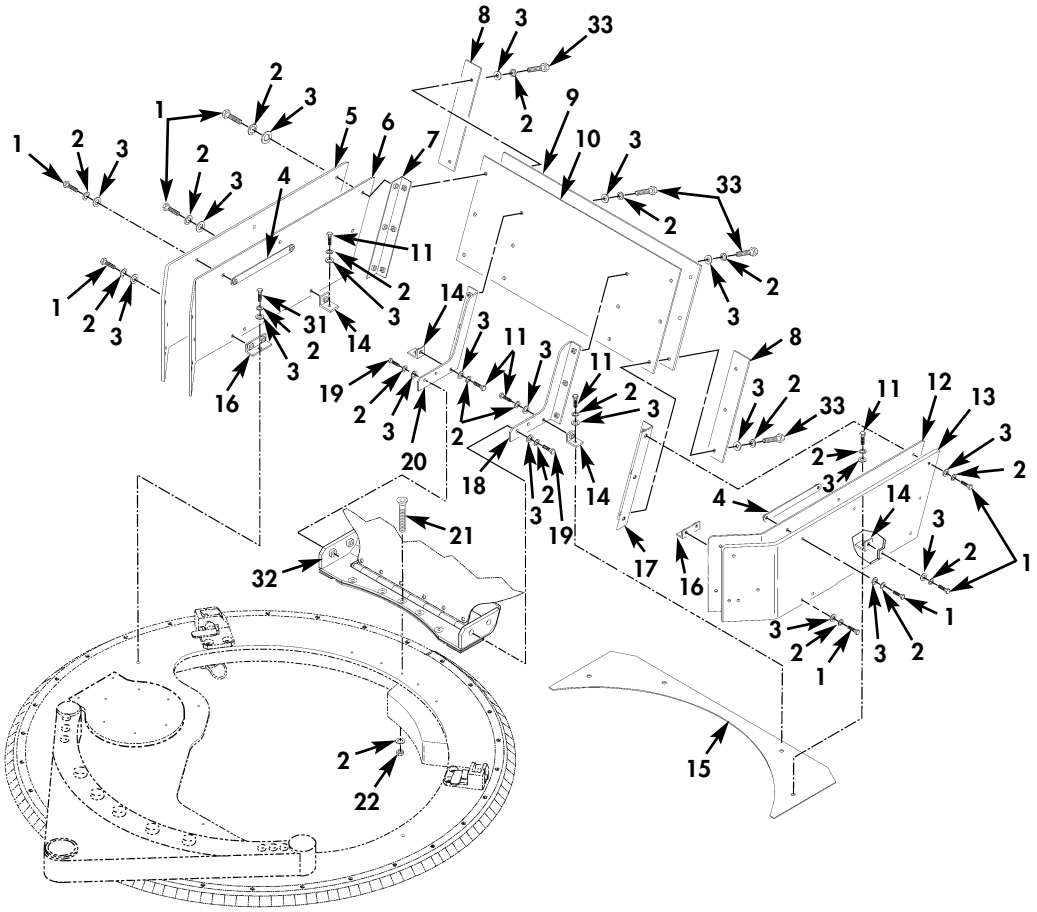

Figure 196F. Gunner Protection Kit (Sheet 1 of 2).

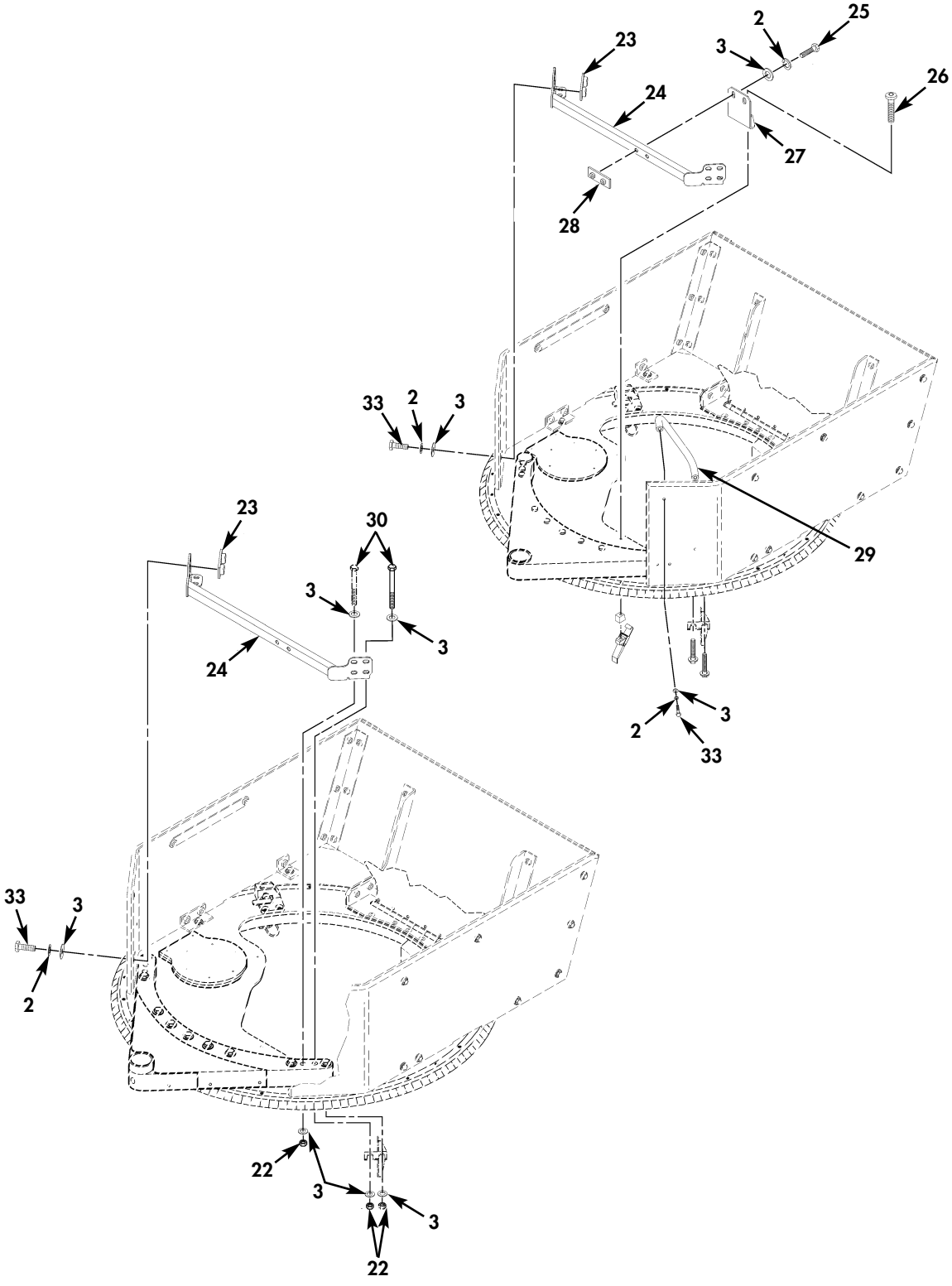

Figure 196F. Gunner Protection Kit (Sheet 2 of 2).

(1) ITEM NO	(2) SMR CODE	(3) NSN	(4) CAGEC	(5) PART NUMBER	(6) DESCRIPTION AND USABLE ON CODES(UOC)	(7) QTY
					GROUP 1801 BODY,CAB,HOOD,AND HULL ASSEMBLY	
					FIG. 196F GUNNER PROTECTION KIT	
* 1	PAOZZ	5305014366377	6W728	4397000-064	SCREW,CAP,HEX HD 3/8-16 X 1.50 PART OF KIT P/N 6431779..... UOC:TTT,XBB	16
* 2	PAOZZ	5310014177273	6W728	4397004-008	WASHER,LOCK 3/8 PART OF KIT P/N 6431779 PART OF KIT P/N 6433328..... UOC:TTT,XBB	50
* 3	PAOZZ	5310014363742	6W728	4397005-015	WASHER,FLAT PART OF KIT P/N 6431779 PART OF KIT P/N 6433328..... UOC:TTT,XBB	54
* 4	PAOZZ		6W728	6431638-200M1	BAR,TIE,TAN PART OF KIT P/N 6431507. UOC:TTT,XBB	2
* 5	PAOZZ		6W728	6431499-200M1	PLATE,ALUMINUM R.H.,TAN PART OF KIT 6431507..... UOC:TTT,XBB	1
* 6	PAOZZ		6W728	6431495-200M1	PLATE,STEEL R.H.,TAN PART OF KIT P/N 6431507..... UOC:TTT,XBB	1
* 7	PAOZZ		6W728	6431561-200M1	BRACKET,CORNER R.H.,TAN PART OF KIT P/N 6431507..... UOC:TTT,XBB	1
* 8	PAOZZ		6W728	6431613-200M1	PLATE,GAPSTRIP TAN PART OF KIT P/N 6431507..... UOC:TTT,XBB	2
* 9	PAOZZ		6W728	6431494-200M1	PLATE,ALUMINUM REAR,TAN PART OF KIT P/N 6431507..... UOC:TTT,XBB	1
* 10	PAOZZ		6W728	6431496-200M1	PLATE,REAR TAN PART OF KIT P/N 6431507..... UOC:TTT,XBB	1
* 11	PAOZZ	5306014339196	6W728	4397000-060	SCREW,CAP,HEXAGON H 3/8-16 X 1.00 PART OF KIT P/N 6431779..... UOC:TTT,XBB	6
* 12	PAOZZ		6W728	6431500-200M1	PLATE,STEEL L.H.,TAN PART OF KIT P/N 6431507..... UOC:TTT,XBB	1
* 13	PAOZZ		6W728	6431493-200M1	PLATE,ALUMINUM L.H.,TAN PART OF KIT P/N 6431507..... UOC:TTT,XBB	1
* 14	PAOZZ		6W728	6431611-200M1	BRACKET,MOUNTING TAN PART OF KIT P/N 6431507..... UOC:TTT,XBB	4
* 15	PAOZZ		6W728	6431614-200M1	PLATE,BOTTOM TAN PART OF KIT P/N 6431507..... UOC:TTT,XBB	1
* 16	PAOZZ		6W728	6431612-200M1	BRACKET,MOUNTING TAN PART OF KIT P/N 6431507..... UOC:TTT,XBB	2
* 17	PAOZZ		6W728	6431560-200M1	BRACKET,CORNER BRAC L.H.,TAN PART	1

(1) ITEM NO	(2) SMR CODE	(3) NSN	(4) CAGEC	(5) PART NUMBER	(6) DESCRIPTION AND USABLE ON CODES(UOC)	(7) QTY
					OF KIT P/N 6431507..... UOC:TTT,XBB	
* 18	PAOZZ		6W728	6431616-200M1	BRACKET,REAR SUPPOR L.H.,TAN PART OF KIT P/N 6431507..... UOC:TTT,XBB	1
* 19	PAOZZ	5306014339197	6W728	4397000-062	SCREW,CAP,HEXAGON H 3/8-16 X 1.25 PART OF KIT P/N 6431779 PART OF KIT P/N 6433328..... UOC:TTT,XBB	6
* 20	PAOZZ		6W728	6431617-200M1	BRACKET,REAR SUPPORT R.H.,TAN PART OF KIT P/N 6431507..... UOC:TTT,XBB	1
* 21	PAOZZ		07BY4	92210A638	SCREW,FLATHEAD 3/8-16 X 4.00 PART OF KIT P/N 6431779..... UOC:TTT,XBB	5
* 22	PAOZZ	5310014398177	6W728	4397064-005	NUT,SELF-LOCKING,HE 3/8-16 PART OF KIT P/N 6431779..... UOC:TTT,XBB	9
* 23	PAOZZ		6W728	6431642-200M1	PLATE,CLAMPING NUT TAN PART OF KIT P/N 6431507..... UOC:TTT,XBB	2
* 24	PAOZZ		6W728	6431647-200M1	CROSSMEMBER,UNIVERS TAN PART OF KIT P/N 6431507..... UOC:TTT,XBB	1
* 25	PAOZZ	5306014485073	6W728	4397000-066	SCREW,CAP,HEXAGON H 3/8-16 X 2.00 PART OF KIT P/N 6431779..... UOC:TTT,XBB	2
* 26	PAOZZ		07BY4	92949A632	SCREW,BUTTON HEAD 3/8-16 X 2.00 PART OF KIT P/N 6431779..... UOC:TTT,XBB	1
* 27	PAOZZ		6W728	6431644-200M1	BRACKET,CROSSMEMBER TAN PART OF KIT P/N 6431507..... UOC:TTT,XBB	1
* 28	PAOZZ		6W728	6431645	NUT,PLATE,CROSSMEMBER PART OF KIT P/N 6431507..... UOC:TTT,XBB	1
* 29	PAOZZ		6W728	6431639-200M1	HANDLE PART OF KIT P/N 6431507..... UOC:TTT,XBB	2
* 30	PAOZZ		6W728	4397000-078	SCREW,CAP,HEXAGON H 3/8-16 X 5.00 PART OF KIT P/N 6431779..... UOC:XBB	1
* 30	PAOZZ	5305002693248	6W728	4397001-072	SCREW,CAP,HEXAGON H 3/8-24 X 3.50 PART OF KIT P/N 6433328..... UOC:TTT	4
* 31	PAOZZ	5306014365393	6W728	4397001-062	SCREW,CAP,HEXAGON H 3/8-24 X 1.25 PART OF KIT P/N 6431779..... UOC:XBB	1
* 31	PAOZZ		6W728	4397001-067	SCREW,CAP,HEXAGON H 3/8-24 X 2.25 PART OF KIT P/N 6433328..... UOC:TTT	2
* 32	PAOZZ		6W728	6431637-200M1	BRACKET,MOUNTING HATCH PART OF KIT P/N 6431507..... UOC:TTT,XBB	1
* 33	PAOZZ	5306014339198	6W728	4397000-065	BOLT,MACHINE 3/8-16 X 1.75 PART OF KIT P/N 6431779..... UOC:TTT,XBB	20

END OF FIGURE

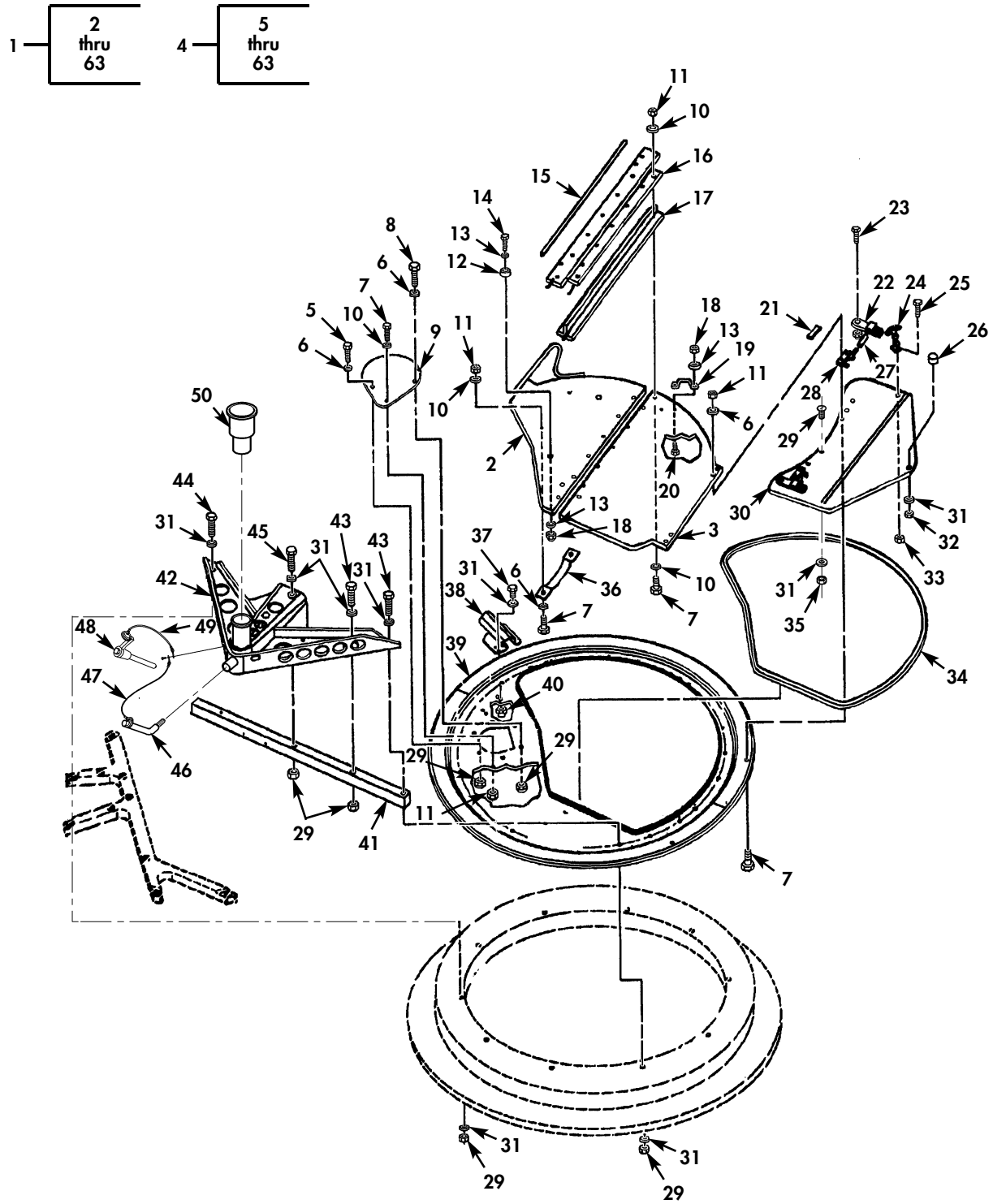

Figure 196G. Weapon Station Tray, Bearing, Mount, and Related Parts (Sheet 1 of 2).

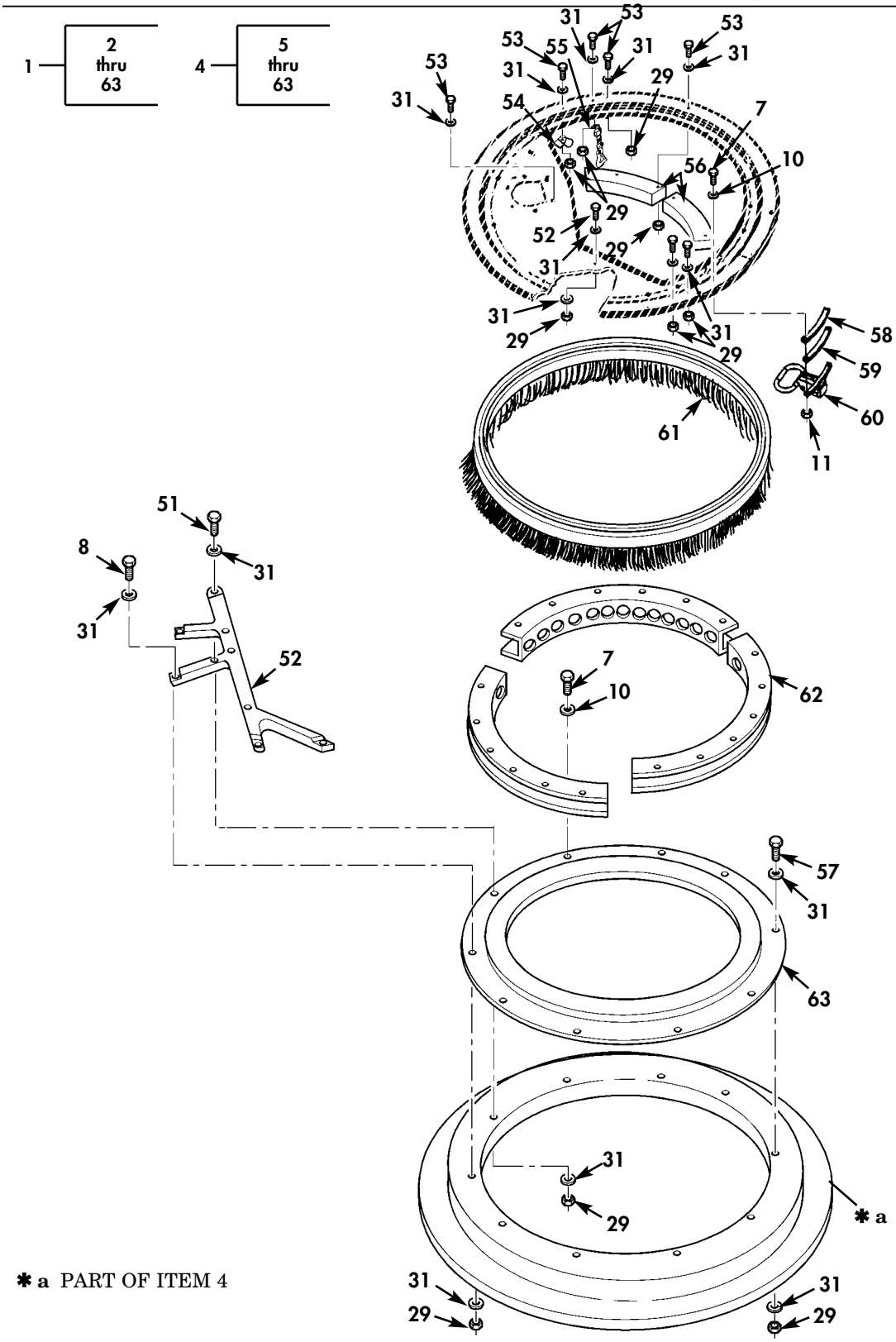

✱a PART OF ITEM 4

Figure 196G. Weapon Station Tray, Bearing, Mount, and Related Parts (Sheet 2 of 2).

(1) ITEM NO	(2) SMR CODE	(3) NSN	(4) CAGEC	(5) PART NUMBER	(6) DESCRIPTION AND USABLE ON CODES(UOC)	(7) QTY
					GROUP 1801 BODY,CAB,HOOD,AND HULL ASSEMBLY	
					FIG. 196G WEAPON STATION TRAY, BEARING,MOUNT,AND RELATED PARTS	
* 1	PAOOO		34623	6022482	INSTALLATION AND EQ..... UOC:TTT	1
* 2	PAOZZ		34623	RCSK19098	.COVER,ACCESS..... UOC:TTT	1
* 3	PAOZZ	5340015251088	19207	12489164	.COVER,ACCESS..... UOC:TTT	1
* 4	PAOZZ	1005014854456	19207	12340152	.MOUNT,GUN..... UOC:TTT	1
* 5	PAOZZ	5305000680510	80204	B1821BH038C100N	..SCREW,CAP,HEXAGON H 3/8-16 X 1.00 UOC:TTT	18
* 6	PAOZZ	5310011023270	24617	2436161	..WASHER,FLAT 1/4..... UOC:TTT	44
* 7	PAOZZ	5305000680508	80204	B1821BH025C075N	..SCREW,CAP,HEXAGON H 1/4-20 X 3/4. UOC:TTT	23
* 8	PAOZZ	5305007813926	80204	B1821BH038C275N	..SCREW,CAP,HEXAGON H 3/8-16 X 2.75 UOC:TTT	19
* 9	PAOZZ	5342012680921	19207	12340094	..COVER,SPECIAL..... UOC:TTT	1
* 10	PAOZZ	5310011992293	7X677	9421394	..WASHER,FLAT..... UOC:TTT	2
* 11	PAOZZ	5310015187173	96906	M45913/3-4CG8C	..NUT,SELF-LOCKING..... UOC:TTT	49
* 12	PAOZZ	5340012038675	34623	5579257	..BUMPER,NONMETALLIC..... UOC:TTT	2
* 13	PAOZZ	5310015250735	24617	9417587	..WASHER,FLAT..... UOC:TTT	8
* 14	PAOZZ	5305009846214	80205	MS35206-267	..SCREW,MACHINE..... UOC:TTT	2
* 15	PAOZZ	2590012589491	19207	12340123	..MOLDING,METAL..... UOC:TTT	1
* 16	PAOZZ	2510012541056	19207	12340091	..HINGE,DOOR,VEHICULA..... UOC:TTT	1
* 17	PAOZZ	5330012584664	34623	5595531	..SEAL,NONMETALLIC SP..... UOC:TTT	1
* 18	PAOZZ	5310012699245	7X677	190254	..NUT,SELF-LOCKING..... UOC:TTT	8
* 19	PAOZZ	5340014341809	19207	12338839-3	..STRAP,RETAINING..... UOC:TTT	3
* 20	PAOZZ	5305013335261	24617	156979	..SCREW,MACHINE..... UOC:TTT	2
* 21	PAOZZ	5365012538975	19207	12340098	..SPACER,RING..... UOC:TTT	2
* 22	PAOZZ	5340014856012	34623	12469293	..BRACKET,MOUNTING..... UOC:TTT	2
* 23	PAOZZ	5305015251327	34623	RCSK19102-1	..SCREW,CAP,SOCKET HE..... UOC:TTT	2
* 24	PAOZZ	5340011309437	94222	37-20-086-20	..CATCH,CLAMPING.....	3

(1) ITEM NO	(2) SMR CODE	(3) NSN	(4) CAGEC	(5) PART NUMBER	(6) DESCRIPTION AND USABLE ON CODES(UOC)	(7) QTY
					UOC:TTT	
* 25	PAOZZ	5305015251329	24617	272488	..SCREW,MACHINE.....	4
					UOC:TTT	
* 26	PAOZZ	5340011858820	19207	12340846-1	..BUMPER,NONMETALLIC.....	1
					UOC:TTT	
* 27	PAOZZ	3120002514172	96881	6L11-F	..BEARING,SLEEVE.....	2
					UOC:TTT	
* 28	PAOZZ	2510012532839	19207	12340126	..HINGE,DOOR,VEHICULA.....	2
					UOC:TTT	
* 29	PAOZZ	5305006303103	14153	MS24667-55	..SCREW,CAP,SOCKET HE.....	3
					UOC:TTT	
* 30	PAOZZ	5340015250619	34623	RCSK19024	..PLATE,MOUNTING.....	1
					UOC:TTT	
* 31	PAOZZ	5310014124013	24617	2436163	..WASHER,FLAT 3/8.....	1
					UOC:TTT	
* 32	PAOZZ	5310015212727	24617	9429047	..NUT,PLAIN,HEXAGON.....	1
					UOC:TTT	
* 33	PAOZZ	5310006965172	24617	271166	..NUT,PLAIN,ASSEMBL.....	4
					UOC:TTT	
* 34	PAOZZ	5330012028360	19207	12340088	..SEAL,NONMETALLIC.....	1
					UOC:TTT	
* 35	PAOZZ	5310009359021	31272	MS51943-35	..NUT,SELF-LOCKING.....	1
					UOC:TTT	
* 36	PAOZZ	2540015250941	96906	45057	..HANDLE,DOOR,VEHICULA.....	1
					UOC:TTT	
* 37	PAOZZ	5306000501237	80204	B1821BH031F063N	..BOLT,MACHINE 5/16-24 X 5/8.....	4
					UOC:TTT	
* 38	PAOZZ	5340014571778	19207	12446730	..HANDLE,BOW.....	1
					UOC:TTT	
* 39	PAOZZ	1005014584456	19207	12470152	..MOUNT,GUN.....	1
					UOC:TTT	
* 40	PAOZZ	5310002416658	96906	MS51943-34	..NUT,SELF-LOCKING.....	4
					UOC:TTT	
* 41	PAOZZ		34623	RCSK19019	..SPACER,STRAIGHT.....	1
					UOC:TTT	
* 42	PAOZZ		34623	RCSK19171	..MOUNT,GUN.....	1
					UOC:TTT	
* 43	PAOZZ	5305007813929	80204	B1821BH038C425N	..SCREW,CAP,HEXAGON H 3/8-16 X 4.25	3
					UOC:TTT	
* 44	PAOZZ	5305014753158	80204	B1821BH038C650N	..SCREW,CAP,HEXAGON H 3/8-16 X 6.50	2
					UOC:TTT	
* 45	PAOZZ	5305008465703	80204	B1821BH038C300N	..SCREW,CAP,HEXAGON H 3/8-16 X 3.00	1
					UOC:TTT	
* 46	PAOZZ	5340014937444	19207	12469320	..LEVER,LOCK-RELEASE.....	1
					UOC:TTT	
* 47	PAOZZ	4010015005006	19207	12342287-2	..WIRE ROPE ASSEMBLY.....	1
					UOC:TTT	
* 48	PAOZZ	5310014950498	80205	M17986C843	..PIN,SUICK RELEASE.....	1
					UOC:TTT	
* 49	PAOZZ		19207	12342287-3	..WIRE ROPE ASSEMBLY.....	1
					UOC:TTT	
* 50	PAOZZ	3120011885082	19207	12340310	..BEARING,SLEEVE.....	1
					UOC:TTT	

(1) ITEM NO	(2) SMR CODE	(3) NSN	(4) CAGEC	(5) PART NUMBER	(6) DESCRIPTION AND USABLE ON CODES(UOC)	(7) QTY
* 51	PAOZZ	5305005432866	80204	B1821BH038C250N	..SCREW,CAP,HEXAGON H 3/8-16 X 2.50 UOC:TTT	1
* 52	PAOZZ	4710011899727	19207	12340337	..TUBE ASSEMBLY,WEAPO..... UOC:TTT	1
* 53	PAOZZ	5305007252317	80204	B1821BH038C150N	..SCREW,CAP,HEXAGON H 3/8-16 X 1.50 UOC:TTT	17
* 54	PAOZZ	2590011974899	19207	12340293	..HOOK,GUNNER'S SLIN..... UOC:TTT	1
* 55	PAOZZ	5340015301744	6W728	6431306	..STRAP,WEBBING..... UOC:TTT	1
* 56	PAOZZ	2590012047836	19207	12340313	..PAD,CUSHIONING..... UOC:TTT	2
* 57	PAOZZ	5305008213869	80204	B1821BH038C175N	..SCREW,CAP,HEXAGON H 3/8-16 X 1.75 UOC:TTT	2
* 58	PAOZZ	5365012544394	19207	12340115-1	..SPACER,PLATE..... UOC:TTT	2
* 59	PAOZZ	5365014573364	19207	12340115-2	..SPACER,PLATE..... UOC:TTT	2
* 60	PAOZZ	5340012538933	31727	45460-10	..LOCK SET,RIM..... UOC:TTT	1
* 61	PAOZZ	5330014864417	34623	12469424	..SEAL,NONMETALLIC SP..... UOC:TTT	1
* 62	PAOZZ	2590011924525	19207	EC12340298	..RING,TURRET LOCK..... UOC:TTT	3
* 63	PAOZZ	3110014805857	19207	12470153-1	..TURRET,BEARING..... UOC:TTT	1

END OF FIGURE

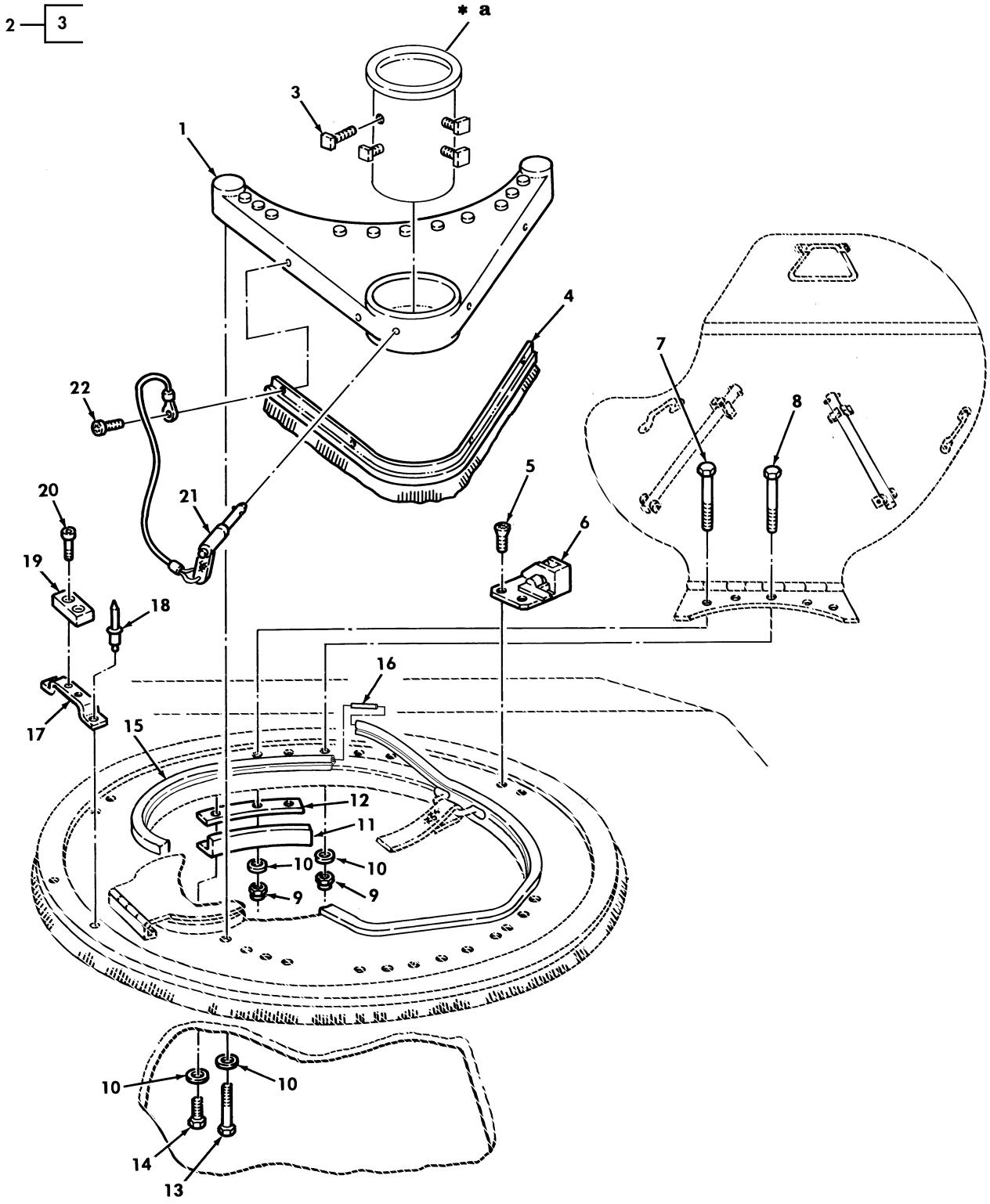

* **a** PART OF ITEM 2

Figure 197. Pintle Mount and Turret Hatch Hardware.

(1) ITEM NO	(2) SMR CODE	(3) NSN	(4) CAGEC	(5) PART NUMBER	(6) DESCRIPTION AND USABLE ON CODES(UOC)	(7) QTY
					GROUP 1801 BODY,CAB,HOOD,AND HULL ASSEMBLY	
					FIG. 197 PINTLE MOUNT AND TURRET HATCH HARDWARE	
1	PFOZZ	2590014351337	6W728	4660101	BRACKET,VEHICULAR C..... UOC:XBB	1
2	PAOZZ	3120011885082	19207	12340310	BEARING,SLEEVE..... UOC:XBB	1
3	PAOZZ	5305012044190	7X677	9428747	.SETSCREW..... UOC:XBB	4
4	PFOZZ	5330014342837	6W728	4660110	SEAL,PLAIN ENCASED..... UOC:XBB	1
5	PAOZZ	5305014376312	6W728	4397067-121	SCREW,MACHINE 3/8-24 X 1.00..... UOC:XBB	4
6	PFOZZ	5340014342870	6W728	4660131	BASE,PIVOT,HATCH L.H..... UOC:XBB	1
6	PFOZZ	5340014342869	6W728	4660148	BASE,PIVOT,HATCH R.H..... UOC:XBB	1
* 7	PAOZZ		6W728	4397001-073	SCREW,CAP,HEXAGON H 3/8-24 X 3.75.. UOC:XBB	4
* 8	PAOZZ	5306014343284	6W728	4397011-070	BOLT,MACHINE 3/8-24 X 3.00..... UOC:XBB	1
9	PAOZZ	5310014373845	6W728	4397064-006	NUT,SELF-LOCKING 3/8-24..... UOC:XBB	5
10	PAOZZ	5310014192413	6W728	4397005-014	WASHER,FLAT 13/32..... UOC:XBB	19
11	PFOZZ	2590014351331	6W728	4660135	PAD,CUSHIONING..... UOC:XBB	2
12	PFOZZ	5365014340855	6W728	4660151	SPACER,PLATE..... UOC:XBB	2
13	PAOZZ	5305008080864	80204	B1821BH038C325N	SCREW,CAP,HEXAGON H 3/8-16 X 3.25.. UOC:XBB	12
14	PAOZZ	5306014347261	6W728	4397001-062	BOLT,MACHINE 3/8-24 X 1.25..... UOC:XBB	2
15	MOOZZ		6W728	4668962-100	SEAL,NONMETALLIC SP MAKE FROM SEAL, P/N 436-5553,100 INCHES LONG..... UOC:XBB	1
* 16	PAOZZ		6W728	1000371-000	CORD,SPONGE 3/8 DIA..... UOC:XBB	1
* 17	PFOZZ	5340014342839	6W728	4660147	BRACKET,MULTIPLE AN..... UOC:XBB	1
* 18	PAOZZ	5320014340758	6W728	4397042-022	RIVET,BLIND .188 X .353 GRIP..... UOC:XBB	2
* 19	PAOZZ	5340014195188	39428	9306K14	BUMPER,NONMETALLIC..... UOC:XBB	1
* 20	PAOZA	5305010760334	10001	3176207-C-087	SCREW,CAP,SOCKET HE 1/4-20 X 5/8... UOC:XBB	2
* 21	PAOZZ	5340014364363	6W728	4668969-004	HANDLE,MANUAL CONTR..... UOC:XBB	1
* 22	PAOZZ	5305014340832	6W728	4397013-070	SCREW,MACHINE #10-32 X 3/8..... UOC:XBB	4

END OF FIGURE

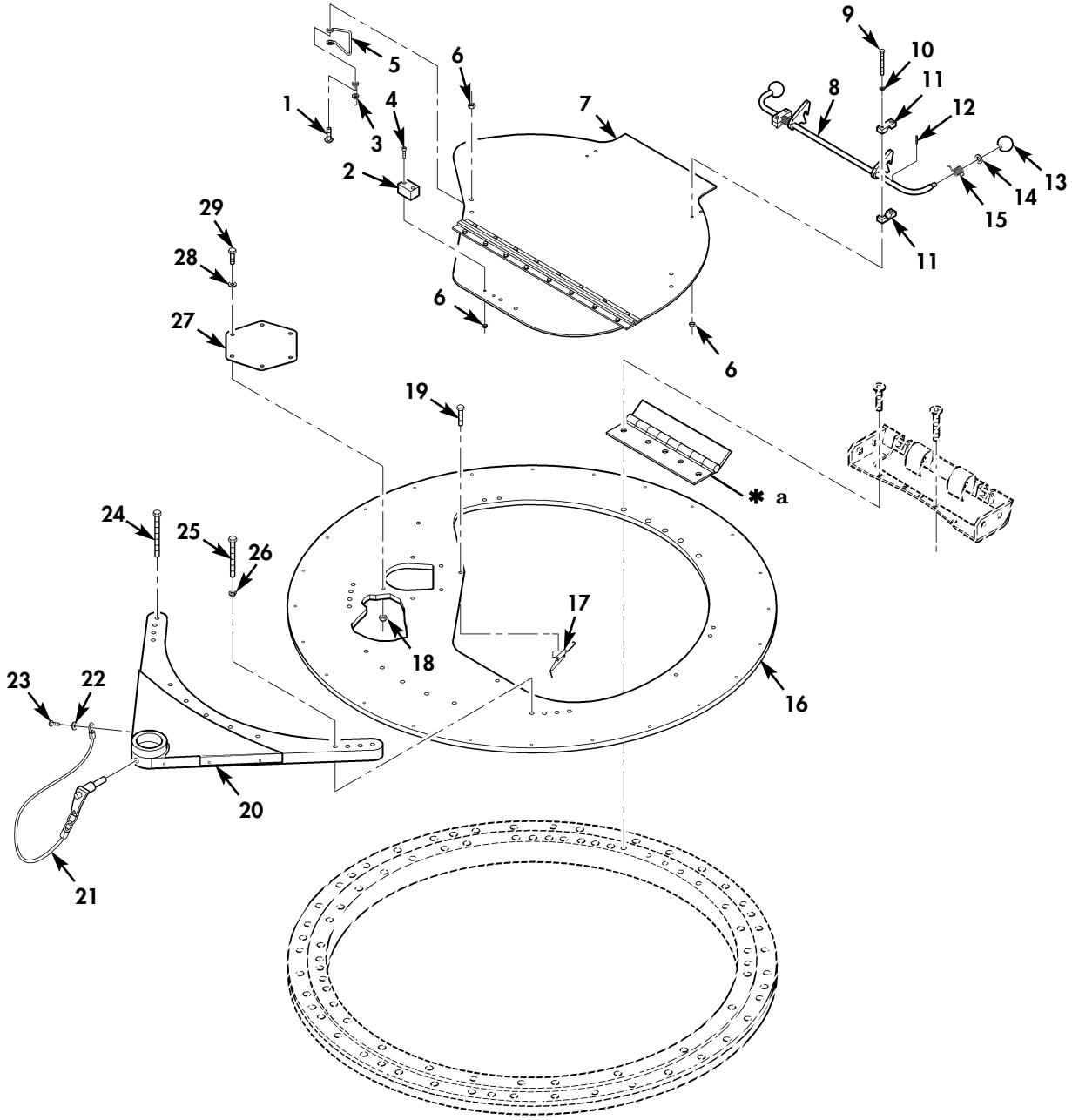

✱ **a** PART OF ITEM 7

Figure 197A. Weapon Station (Sheet 1 of 2).

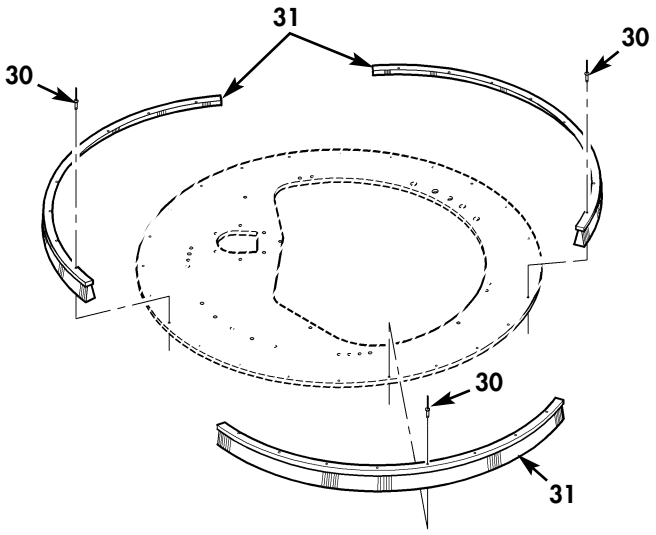

Figure 197A. Weapon Station (Sheet 2 of 2).

(1) ITEM NO	(2) SMR CODE	(3) NSN	(4) CAGEC	(5) PART NUMBER	(6) DESCRIPTION AND USABLE ON CODES(UOC)	(7) QTY
					GROUP 1801 BODY,CAB,HOOD,AND HULL ASSEMBLY	
					FIG. 197A WEAPON STATION	
* 1	PAOZZ	5305014377295	6W728	4397061-073	SCREW,MACHINE #10-32 X 5/8..... UOC:TTT	6
* 2	PAOZZ	5340014195188	39428	9306K14	BUMPER,NONMETALLIC..... UOC:TTT	1
* 3	PAOZZ	5340014341809	19207	12338839-3	STRAP,RETAINING..... UOC:TTT	3
* 4	PAOZZ	5305014339255	6W728	4397015-090	SCREW,CAP,SOCKET H 1/4-20 X 5/8.... UOC:TTT	2
* 5	PAOZZ	5340014342844	6W728	4660543-002	HANDLE,BOW TURRET HATCH..... UOC:TTT	1
* 6	PAOZZ	5310014398173	6W728	4397064-001	NUT,SELF-LOCKING 1/4-20..... UOC:TTT	6
* 7	PAOZZ		6W728	6432685-200M1	WELDMENT,TURRET LID..... UOC:TTT	1
* 8	PAOZZ		6W728	6431573-01M1	HANDLE,SLAM LATCH..... UOC:TTT	1
* 9	PAOZZ	5306014339185	6W728	4397000-013	BOLT,MACHINE 1/4-20 X 1.750..... UOC:TTT	4
* 10	PAOZZ	5310014357784	6W728	4397005-010	WASHER,FLAT 1/4..... UOC:TTT	8
* 11	PAOZZ		6W728	6431569-01M1	BLOCK,RETAINING..... UOC:TTT	4
* 12	PAOZZ		6W728	6432460-01M1	PIN,SPRING..... UOC:TTT	2
* 13	PAOZZ		6W728	6432459-01M1	KNOB SLAM LATCH..... UOC:TTT	2
* 14	PAOZZ		6W728	6432458-01M1	WASHER,FLAT..... UOC:TTT	2
* 15	PAOZZ		6W728	6431571-01M1	SPRING,TORSION L.H..... UOC:TTT	1
* 15	PAOZZ		6W728	6431570-01M1	SPRING,TORSION R.H..... UOC:TTT	1
* 16	PAOZZ		6W728	6432684-01M1	ARMOR,PLATE..... UOC:TTT	1
* 17	PAOZZ	5340014342864	31727	12340648	LATCH,RIM..... UOC:TTT	3
* 18	PAOZZ	5310014398177	6W728	4397064-005	NUT,SELF-LOCKING 3/8-16..... UOC:TTT	6
* 19	PAOZZ	5305014366377	6W728	4397000-064	SCREW,CAP,HEXAGON H 3/8-16 X 1.50.. UOC:TTT	2
* 20	PAOZZ		6W728	1000414	BASE ASSEMBLY..... UOC:TTT	1
* 21	PAOZZ	5340014364363	6W728	4668969-004	HANDLE,MANUAL CONTR..... UOC:TTT	1
* 22	PAOZZ	5310014341385	6W728	4397004-005	WASHER,LOCK #10..... UOC:TTT	1

(1) ITEM NO	(2) SMR CODE	(3) NSN	(4) CAGEC	(5) PART NUMBER	(6) DESCRIPTION AND USABLE ON CODES(UOC)	(7) QTY
* 23	PAOZZ	5305014340832	6W728	4397013-070	SCREW,MACHINE #10-32 X 3/8..... UOC:TTT	1
* 24	PAOZZ	5305002693247	6W728	4397001-071	SCREW,CAP,HEXAGON H 3/8-24 X 3.25.. UOC:TTT	11
* 25	PAOZZ		6W728	4397001-067	SCREW,CAP,HEXAGON H 3/8-24 X 2.25.. UOC:TTT	2
* 26	PAOZZ	5310014192413	6W728	4397005-014	WASHER,FLAT 3/8..... UOC:TTT	33
* 27	PAOZZ		6W728	6432686-01M1	ARMOR,PLATE..... UOC:TTT	1
* 28	PAOZZ	5310014177273	6W728	4397004-008	WASHER,LOCK 3/8..... UOC:TTT	26
* 29	PAOZZ	5305015135667	6W728	4397000-059	SCREW,CAP,HEXAGON H 3/8-16 X 7/8... UOC:TTT	8
* 30	PAOZZ	5320014365552	6W728	4397042-621	RIVET,BLIND .188 X .188 X 1/4..... UOC:TTT	24
* 31	PAOZZ		6W728	6432774-01M1	SEAL,BRUSH..... UOC:TTT	3

END OF FIGURE

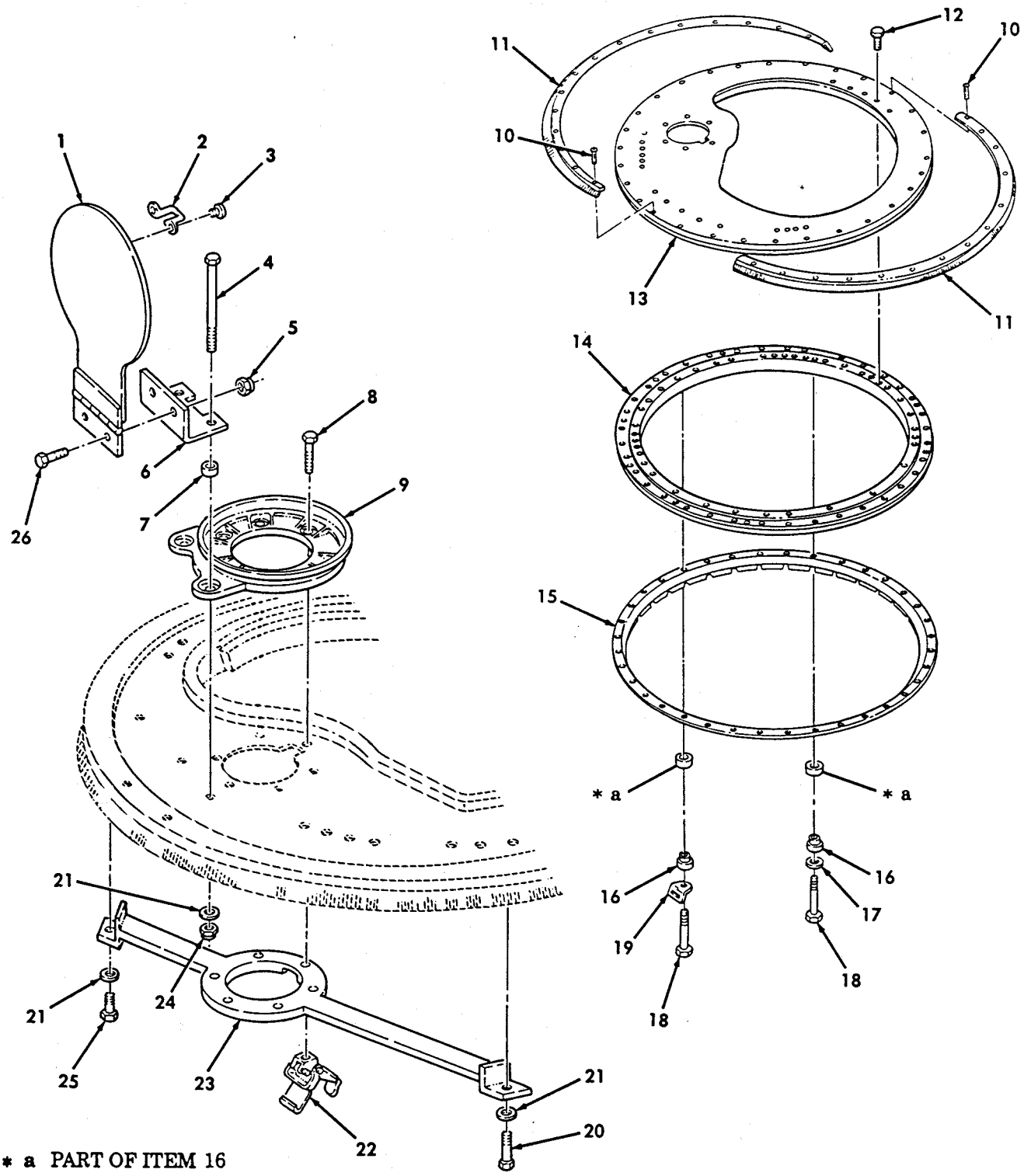

Figure 198. Turret Assembly-Night Vision Mount.

(1) ITEM NO	(2) SMR CODE	(3) NSN	(4) CAGEC	(5) PART NUMBER	(6) DESCRIPTION AND USABLE ON CODES(UOC)	(7) QTY
					GROUP 1801 BODY,CAB,HOOD,AND HULL ASSEMBLY	
					FIG. 198 TURRET ASSEMBLY-NIGHT VISION MOUNT	
1	PFOZZ	2510014351323	6W728	4660113	DOOR,HATCH,VEHICLE..... UOC:XBB	1
2	PAOZZ	5340014341809	19207	12338839-3	STRAP,RETAINING..... UOC:XBB	1
3	PAOZZ	5305014379169	6W728	4397063-070	SCREW,MACHINE #10-32 X 3/8..... UOC:XBB	2
4	PAOZZ	5305002693248	80204	B1821BH038F350N	SCREW,CAP,HEXAGON H 3/8-24 X 3.50.. UOC:XBB	2
5	PAOZZ	5310014398173	6W728	4397064-001	NUT,SELF-LOCKING,HE 1/4-20..... UOC:XBB	2
6	PFOZZ	5340014342863	6W728	4660116	BRACKET,ANGLE..... UOC:XBB	1
7	PFOZZ	5365014340854	6W728	4660118	SPACER,RING..... UOC:XBB	2
8	PAOZZ	5305011409118	80204	B1821BH038C088N	SCREW,CAP,HEXAGON H 3/8-16 X 7/8... UOC:XBB	6
9	PAOZZ	2590011899736	19207	12339679-1	PEDESTAL ASSEMBLY,T..... UOC:XBB	1
10	PAOZZ	5320014365552	6W728	4397042-621	RIVET,BLIND .188 X .218..... UOC:XBB	28
11	PFOZZ	5330014342838	6W728	4660120	SEAL,PLAIN ENCASED..... UOC:XBB	2
12	PAOZZ	5305002693234	80204	B1821BH038F075N	SCREW,CAP,HEXAGON H 3/8-24 X 3/4... UOC:XBB	2
13	PFOZZ	2540014350469	6W728	4660132	ARMOR,SUPPLEMENTAL..... UOC:XBB	1
14	PFOZZ	3110014422421	6W728	4660149	BEARING,BALL,ANNULA..... UOC:XBB	1
* 15	PAOZZ		6W728	4662415	RING ASSEMBLY,TURRE..... UOC:XBB	1
16	PAOZZ	5365014746596	6W728	4668958-003	BUSHING,SLEEVE..... UOC:XBB	36
17	PAOZZ	5310014363742	6W728	4397005-015	WASHER,FLAT 7/16..... UOC:XBB	36
* 18	PAOZZ	5305008465703	80204	B1821BH038C300N	SCREW,CAP,HEXAGON H 3/8-16 X 3.00.. UOC:XBB	36
19	PFOZZ	5340014353805	6W728	4660315	BRACKET,ANGLE..... UOC:XBB	1
20	PAOZZ	5305007813927	80204	B1821BH038C350N	SCREW,CAP,HEXAGON H 3/8-16 X 3.50.. UOC:XBB	1
21	PAOZZ	5310014192413	6W728	4397005-014	WASHER,FLAT 13/32..... UOC:XBB	4
22	PAOZZ	5340014342864	31272	12340648	LATCH,RIM..... UOC:XBB	1
23	PAOZZ	2590014345234	6W728	4660121	BRACKET,VEHICULAR C..... UOC:XBB	1
24	PAOZZ	5310014373845	6W728	4397064-006	NUT,SELF-LOCKING,HE 3/8-24..... UOC:XBB	2

(1) ITEM NO	(2) SMR CODE	(3) NSN	(4) CAGEC	(5) PART NUMBER	(6) DESCRIPTION AND USABLE ON CODES(UOC)	(7) QTY
* 25	PAOZZ	5305002693236	80204	B1821BH038F100N	SCREW,CAP HEXAGON .375-24 X 1.00... UOC:XBB	1
* 26	PAOZZ	5305000687837	80204	B1821BH025C063N	SCREW,CAP HEXAGON H .250-20 X .625. UOC:XBB	2

END OF FIGURE

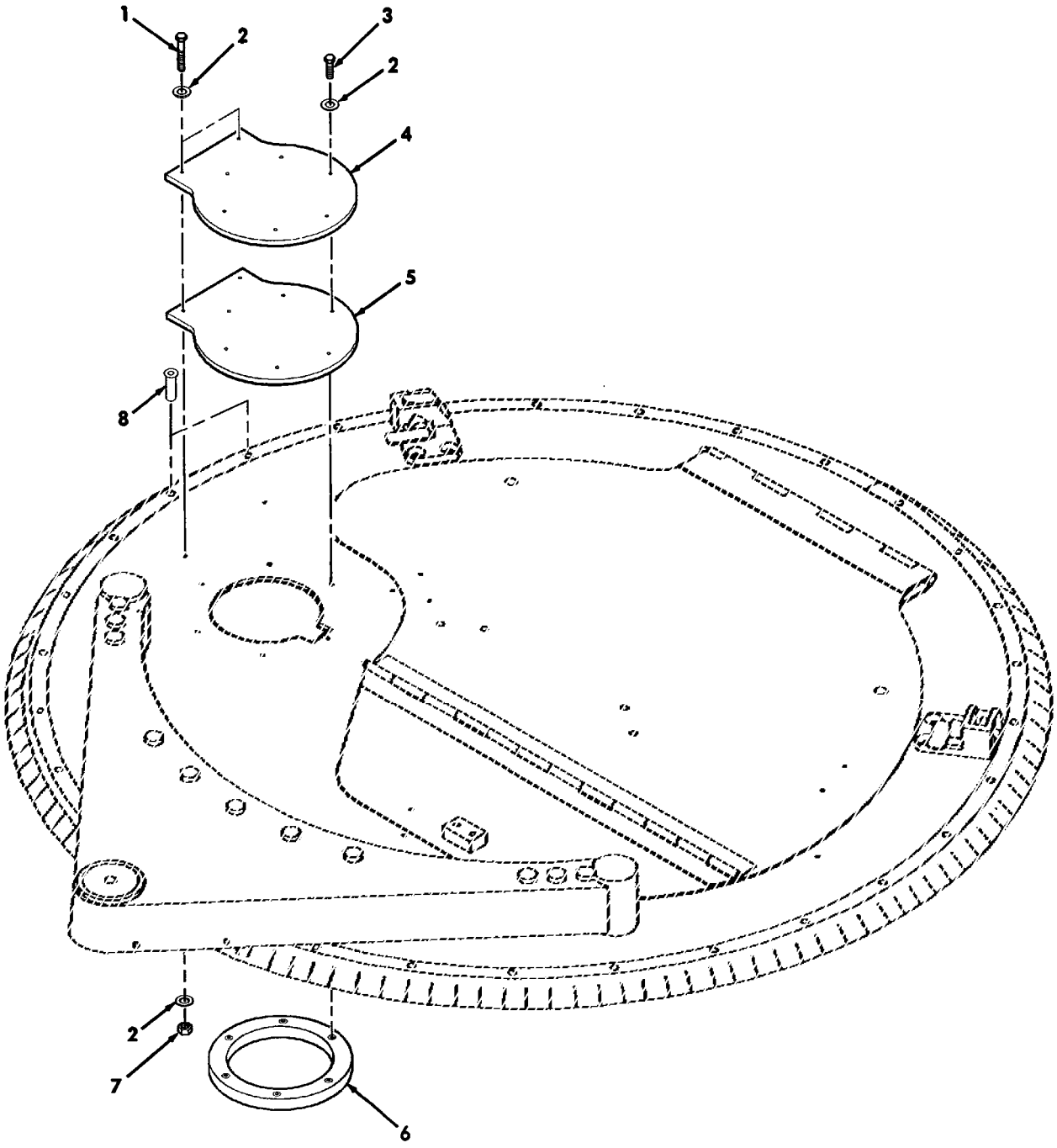

Figure 198A. Turret Assembly Covers and Related Parts.

(1) ITEM NO	(2) SMR CODE	(3) NSN	(4) CAGEC	(5) PART NUMBER	(6) DESCRIPTION AND USABLE ON CODES(UOC)	(7) QTY
					GROUP 1801 BODY,CAB,HOOD,AND HULL ASSEMBLY	
					FIG. 198A TURRET ASSEMBLY COVERS AND RELATED PARTS	
* 1	PAOZZ	5305002693247	6W728	4397001-071	SCREW,CAP,HEXAGON H 3/8-16 X 3.25.. UOC:XBB	2
* 2	PAOZZ	5310014192413	6W728	4397005-014	WASHER,FLAT..... UOC:XBB	10
* 3	PAOZZ	5306014339197	6W728	4397000-062	BOLT,MACHINE 3/8-16 X 1.25..... UOC:XBB	6
* 4	PAOZZ		6W728	1000324-002	COVER,ACCESS..... UOC:XBB	1
* 5	PAOZZ		6W728	1000326-000	COVER,ACCESS..... UOC:XBB	1
* 6	PAOZZ		6W728	1000325-002	RING,NUT..... UOC:XBB	1
* 7	PAOZZ	5310014373845	6W728	4397064-006	NUT,SELF-LOCKING..... UOC:XBB	2
* 8	PAOZZ	5320014365552	6W728	4397042-621	RIVET,BLIND..... UOC:XBB	2

END OF FIGURE

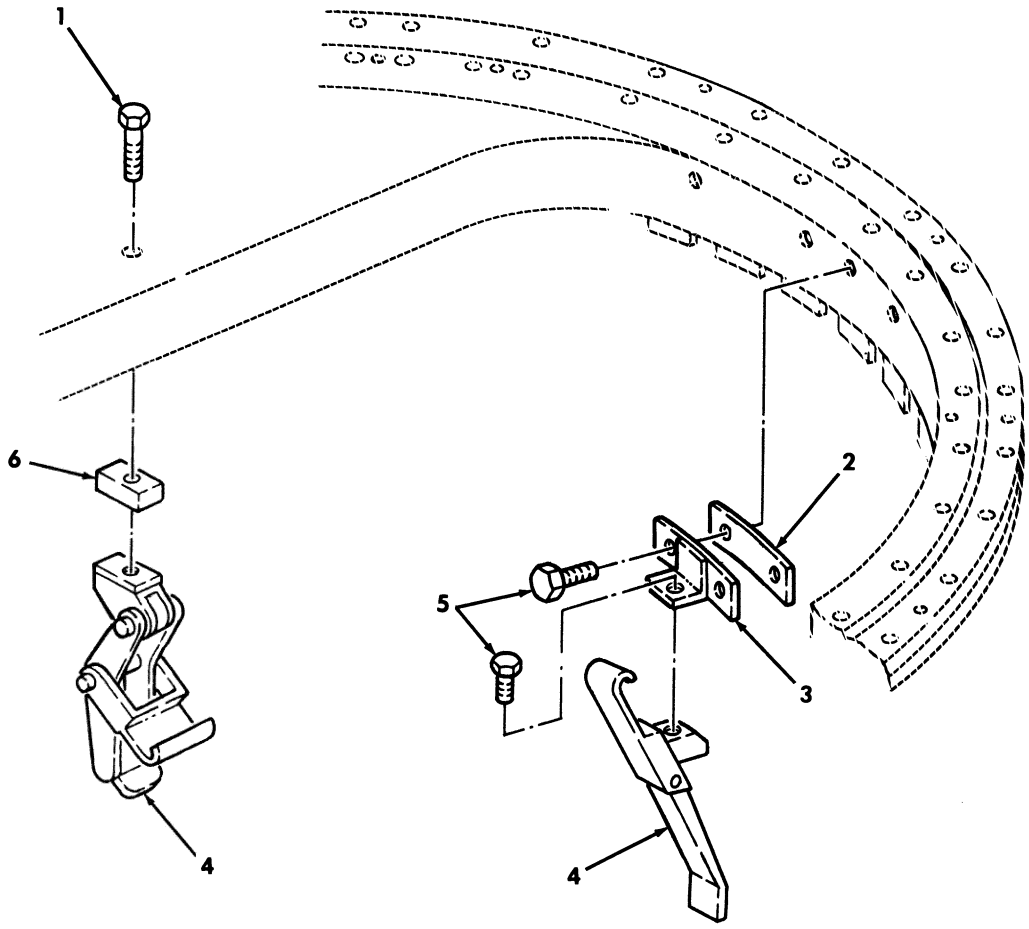

Figure 199. Turret Hatch Latches and Related Parts.

(1) ITEM NO	(2) SMR CODE	(3) NSN	(4) CAGEC	(5) PART NUMBER	(6) DESCRIPTION AND USABLE ON CODES(UOC)	(7) QTY
					GROUP 1801 BODY,CAB,HOOD,AND HULL ASSEMBLY	
					FIG. 199 TURRET HATCH LATCHES AND RELATED PARTS	
* 1	PAOZZ	5305017252317	80204	B1821BH038C150N	SCREW,CAP,HEXAGON H 3/8-16 X 1.50.. UOC:XBB	1
* 2	PAOZZ	5360015134390	6W728	1000050	SPRING,FLAT..... UOC:XBB	2
* 3	PAOZZ	5340014348634	6W728	4660140	BRACKET,MOUNTING..... UOC:XBB	2
* 4	PAOZZ	5340014345864	31272	12340648	LATCH,RIM..... UOC:XBB	2
* 5	PAOZZ	5305007215492	80204	B1821BH038C063N	SCREW,CAP,HEXAGON H 3/8-16 X 5/8... UOC:XBB	3
* 6	PFOZZ	5365014340853	6W728	4660145	SPACER,PLATE..... UOC:XBB	2

END OF FIGURE

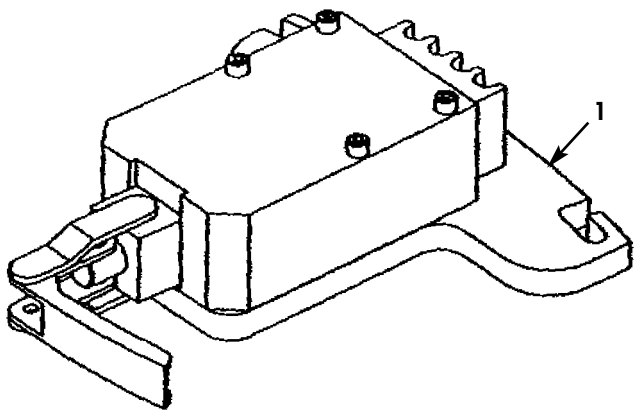

Figure 199A. Turret Brake Assembly.

(1) ITEM NO	(2) SMR CODE	(3) NSN	(4) CAGEC	(5) PART NUMBER	(6) DESCRIPTION AND USABLE ON CODES(UOC)	(7) QTY
					GROUP 1801 BODY,CAB,HOOD,AND HULL ASSEMBLY	
					FIG. 199A TURRET BRAKE ASSEMBLY	
* 1	PAOZZ	5340015174192	6W728	1000545	LEVER,LOCK RELEASE..... UOC:XBB	1

END OF FIGURE

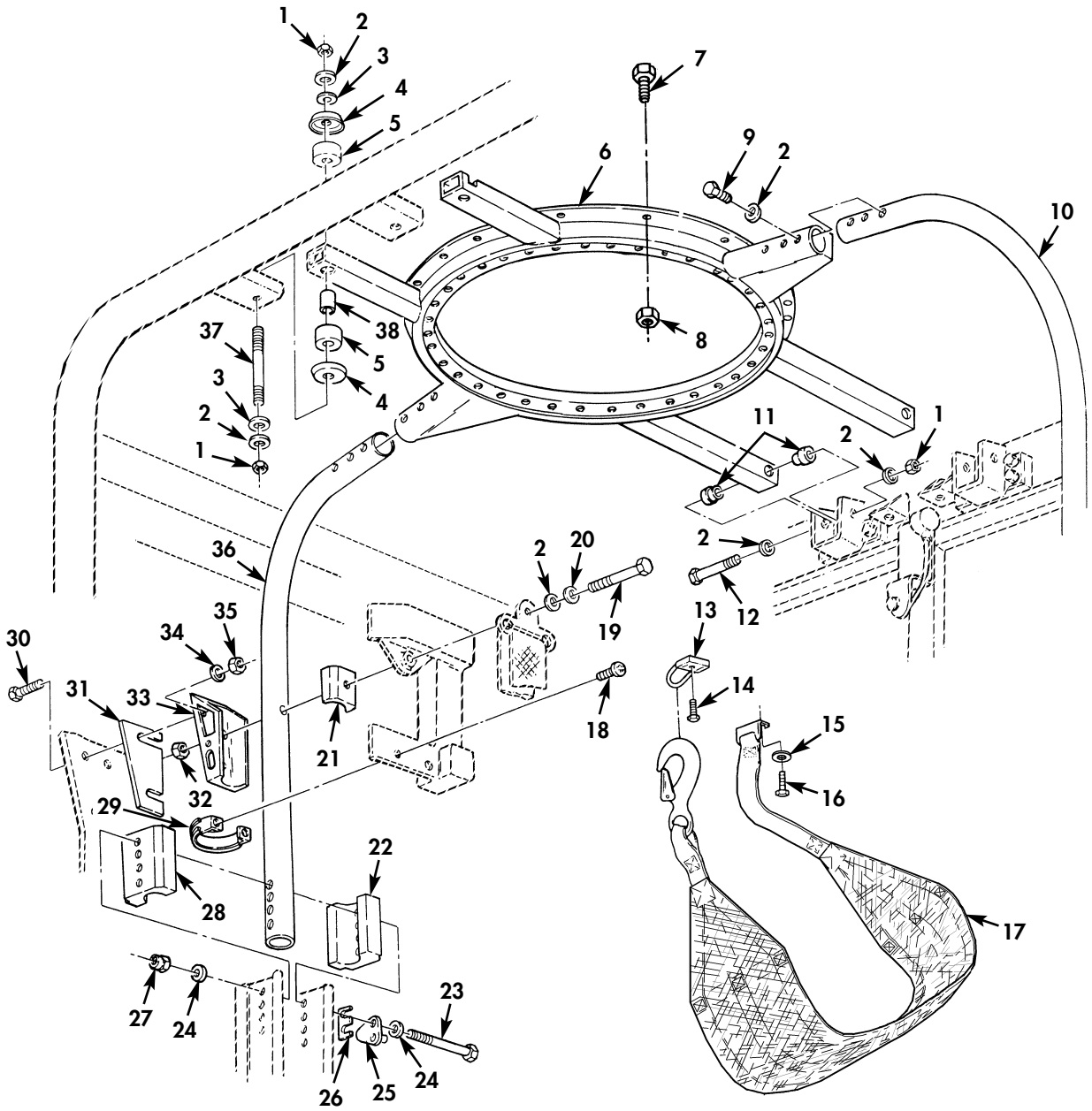

Figure 200. Turret Frame, Gunner's Sling, and Related Parts.

(1) ITEM NO	(2) SMR CODE	(3) NSN	(4) CAGEC	(5) PART NUMBER	(6) DESCRIPTION AND USABLE ON CODES(UOC)	(7) QTY
					GROUP 1801 BODY,CAB,HOOD,AND HULL ASSEMBLY	
					FIG. 200 TURRET FRAME,GUNNER'S SLING, AND RELATED PARTS	
1	PAFZZ	5310014398177	6W728	4397064-005	NUT,SELF-LOCKING,HE 3/8-16..... UOC:XBB	6
2	PAFZZ	5310014192413	6W728	4397005-014	WASHER,FLAT 13/32..... UOC:XBB	16
3	PAFZZ	5310012122303	34623	5591507	WASHER,SLOTTED..... UOC:XBB	4
4	PFFZZ	2540011925949	19207	12339561	PLATE,SNUBBER,VEHIC REAR SUPPORT MOUNT..... UOC:XBB	4
5	PAFZZ	5340012110838	34623	5584891	MOUNT,RESILIENT..... UOC:XBB	4
6	PFFZZ	2510014345245	6W728	4660700	COVER,TURRET BASE..... UOC:XBB	1
7	PAFZZ	5305002253843	80204	B1821BH025C100N	SCREW,CAP,HEXAGON H 1/4-20 X 1.00.. UOC:XBB	22
8	PAFZZ	5310014398173	6W728	4397064-001	NUT,SELF-LOCKING,HE 1/4-20..... UOC:XBB	22
9	PAFZZ	5305008465703	80204	B1821BH038C300N	SCREW,CAP,HEXAGON H 3/8-16 X 3.00.. UOC:XBB	6
10	PBFZZ	2510014750779	34623	RCSK17646-2	SUPPORT,PILLAR UPPER,"B" PILLAR.... UOC:XBB	1
11	PBFZZ	5340011976755	34623	EC12338083	MOUNT,RESILIENT..... UOC:XBB	4
12	PAFZZ	5305008576886	80204	B1821BH038C450N	SCREW,CAP,HEXAGON H 3/8-16 X 4.50.. UOC:XBB	2
13	PAFZZ	2590011974899	19207	12340293	HOOK,GUNNER SLING..... UOC:XBB	1
14	PAFZZ	5305000680510	80204	B1821BH038C100N	SCREW,CAP,HEXAGON H 3/8-16 X 1.00.. UOC:XBB	1
* 15	PAFZZ		6W728	6431457-014	WASHER,FLAT 3/8..... UOC:XBB	1
* 16	PAFZZ	5305002693234	80204	B1821BH038F075N	SCREW,CAP,HEXAGON H 3/8-24 X 3/4... UOC:XBB	1
* 17	PAFZZ	5340015301744	98313	FDC9902	STRAP,WEBBING..... UOC:XBB	1
* 18	PAFZZ	5305014340832	6W728	4397013-070	SCREW,MACHINE #10-32 X 3/8..... UOC:XBB	4
* 19	PAFZZ	5306013157088	19207	12340259-4	BOLT,SHOULDER 7/16-20 X 3.47..... UOC:XBB	2
* 20	PAFZZ	5310012866077	19207	12341856	WASHER,FLAT .450..... UOC:XBB	2
* 21	PAFZZ	5340013335851	19207	12342381	STRAP,RETAINING..... UOC:XBB	2
* 22	PAFZZ	2590014751325	34623	RCSK17645-1	SUPPORT,TURRET..... UOC:XBB	2
* 23	PAFZZ	5306002928253	88044	AN5H41	BOLT,MACHINE 5/16-24 X 4.21..... UOC:XBB	2

(1) ITEM NO	(2) SMR CODE	(3) NSN	(4) CAGEC	(5) PART NUMBER	(6) DESCRIPTION AND USABLE ON CODES(UOC)	(7) QTY
* 24	PAFZZ	5310011946459	19207	12339724	WASHER,FLAT 11/32..... UOC:XBB	4
* 25	PAFZZ	5340014401441	6W728	4660964	STRIKE,CATCH R.H..... UOC:XBB	1
* 25	PAFZZ	5340014401442	6W728	4660965	STRIKE,CATCH L.H..... UOC:XBB	1
* 26	PAFZZ	5365014333989	6W728	4668621	SPACER,PLATE..... UOC:XBB	6
* 27	PAFZZ	5310002416658	96906	M45913/3-5FG8C	NUT,SELF-LOCKING,HE 5/16-24..... UOC:XBB	2
* 28	PAFZZ	2590014751318	34623	RCSK17645-2	SUPPORT,TURRET..... UOC:XBB	2
* 29	PAFZZ	5340014342845	6W728	4660731	CLAMP,LOOP..... UOC:XBB	2
* 30	PAFZZ	5306014339183	6W728	4397000-036	BOLT,MACHINE 5/16-18 X 1.25..... UOC:XBB	6
* 31	PAFZZ	5340014338425	6W728	4660842	SPACER,B-PILLAR..... UOC:XBB	2
* 32	PAFZZ	5310014398178	6W728	4397064-008	NUT,SELF-LOCKING,HE 7/16-20..... UOC:XBB	2
* 33	PAFZZ	5340014338424	6W728	4660841	BRACKET,MOUNTING L.H..... UOC:XBB	1
* 33	PAFZZ	5340014338428	6W728	4660850	BRACKET,MOUNTING R.H..... UOC:XBB	1
* 34	PAFZZ	5310014229287	6W728	4397005-012	WASHER,FLAT 5/16..... UOC:XBB	6
* 35	PAFZZ	5310014398172	6W728	4397064-003	NUT,SELF-LOCKING,HE 5/16-18..... UOC:XBB	6
* 36	PBFZZ	2510014750796	34623	RCSK17646-1	SUPPORT,PILLAR UPPER,"B" PILLAR.... UOC:XBB	1
* 37	PAFZZ	5307012542504	19207	12339559	STUD,PLAIN..... UOC:XBB	2
* 38	PAFZZ	5365012160364	19207	12338186-52	SPACER,SLEEVE..... UOC:XBB	2

END OF FIGURE

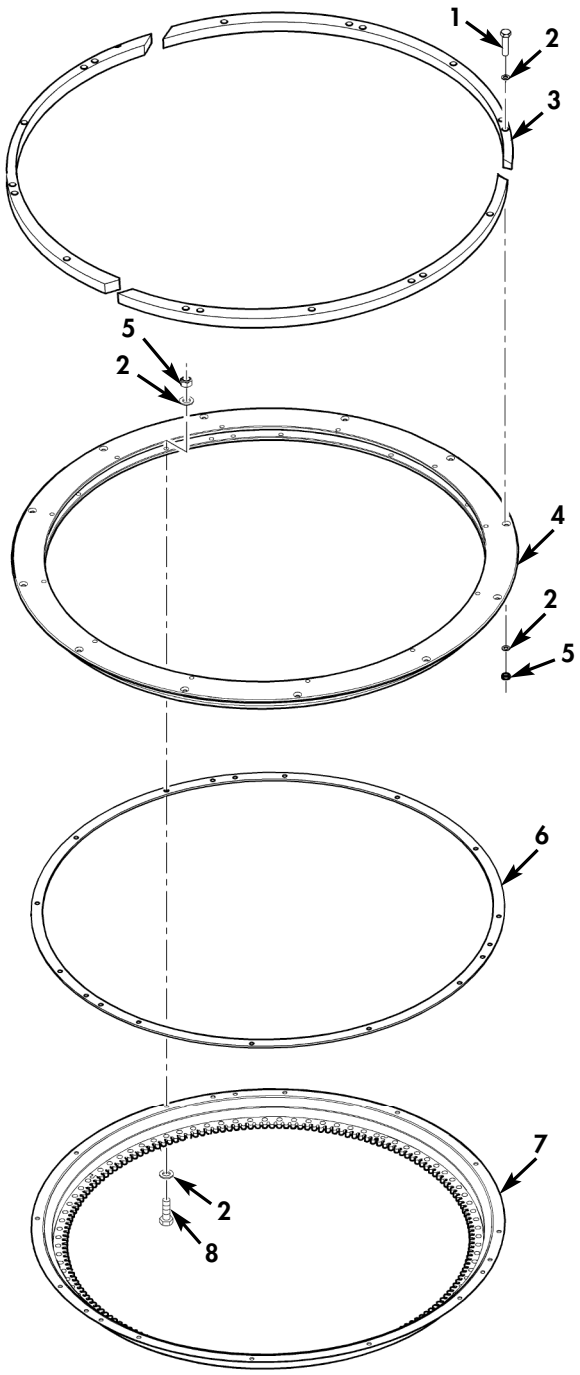

Figure 200A. Weapon Station, Support Bearing, and Traversing Ring (Use with Armor Kits).

(1) ITEM NO	(2) SMR CODE	(3) NSN	(4) CAGEC	(5) PART NUMBER	(6) DESCRIPTION AND USABLE ON CODES(UOC)	(7) QTY
					GROUP 1801 BODY,CAB,HOOD,AND HULL ASSEMBLY	
					FIG. 200A WEAPON STATION,SUPPORT BEARING,AND TRAVERSING RING (USE WITH ARMOR KITS)	
* 1	PAOZZ	5305002693243	80204	B1821BH038F225N	SCREW,CAP,HEXAGON H 3/8-24 X 2.25... UOC:TTA,TTT,TT1	12
* 2	PAOZZ	5310014124013	24617	2436163	WASHER,FLAT 3/8..... UOC:TTA,TTT,TT1	60
* 3	PAOZZ	5340015739486	6W728	6432775	PLATE,MOUNTING..... UOC:TTA,TTT,TT1	3
* 4	PAOZZ	3110015739774	34623	6013001	BEARING,SLEWING RING..... UOC:TTA,TTT,TT1	1
* 5	PAOZZ	5310015529654	96906	M45913/4-6FG8Z	NUT,SELF-LOCKING,HE 3/8..... UOC:TTA,TTT,TT1	30
* 6	PAOZZ	5365015718456	19207	12518523	SPACER,RING..... UOC:TTA,TTT,TT1	1
* 7	PAOZZ		34623	6015771	RING,TURRET,TRAVERS..... UOC:TTA,TTT,TT1	1
* 8	PAOZZ	5305002693239	80204	B1821BH038F138N	SCREW,CAP,HEXAGON H 3/8-24 X 1.375.. UOC:TTA,TTT,TT1	18

END OF FIGURE

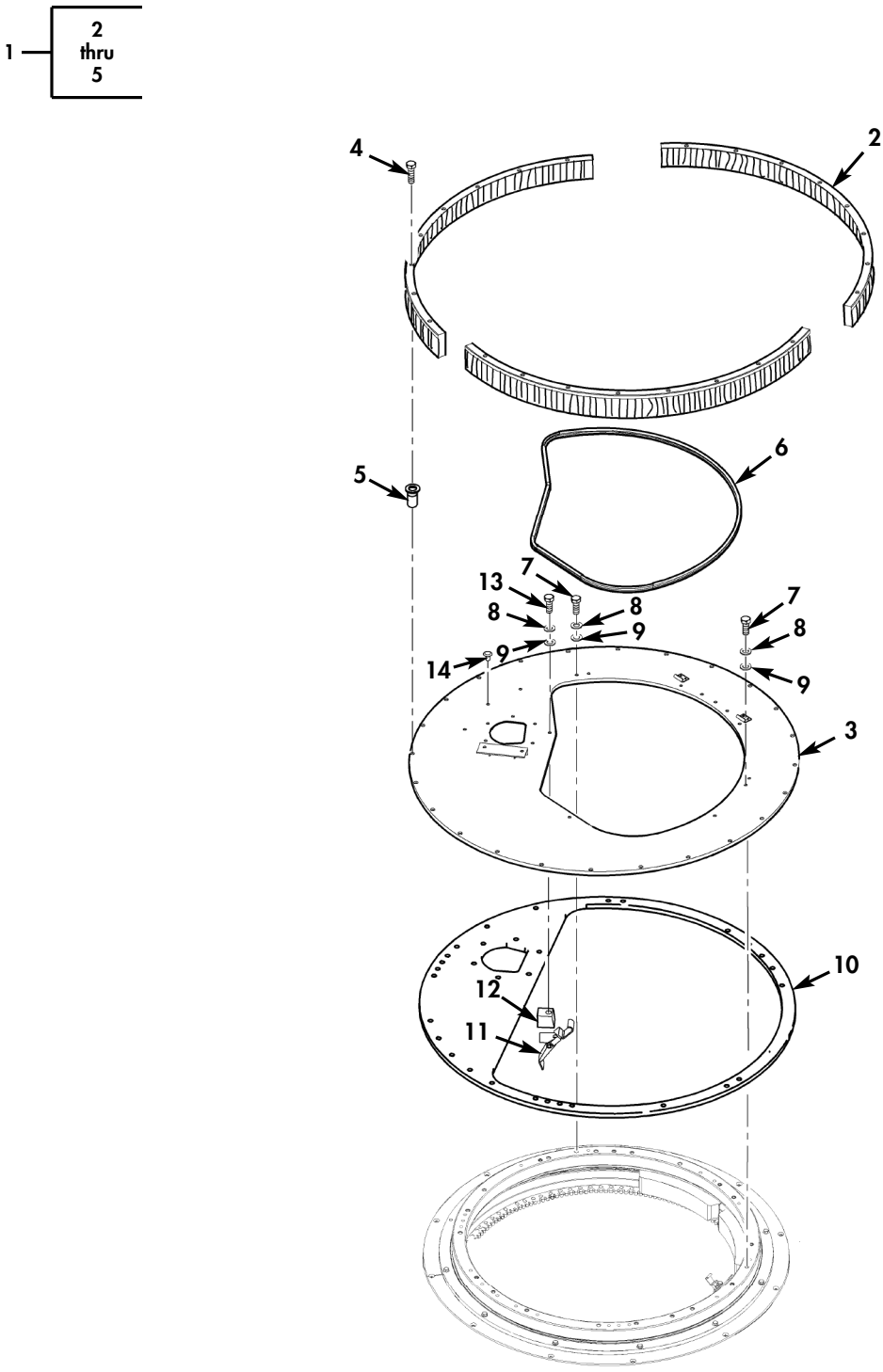

Figure 200B. Turret Weapon Station Mount.

(1) ITEM NO	(2) SMR CODE	(3) NSN	(4) CAGEC	(5) PART NUMBER	(6) DESCRIPTION AND USABLE ON CODES(UOC)	(7) QTY
					GROUP 1801 BODY,CAB,HOOD,AND HULL ASSEMBLY	
					FIG. 200B TURRET WEAPON STATION MOUNT	
* 1	PFOOO		19207	12518529	TRAY,WEAPON,VEHICUL..... UOC:TTA,TT1	1
* 2	PAOZZ	2590015717354	72387	491051	.BRUSH ASSY, TURRET..... UOC:TTA,TT1	3
* 3	XAOZZ		19207	12518532	.TRAY ASSEMBLY,TURRE..... UOC:TTA,TT1	1
* 4	PAOZZ	5305007642970	80205	MS24667-21	.SCREW,CAP,SOCKET HE #10-24 X 5/8... UOC:TTA,TT1	24
* 5	PAOZZ	5325014759697	78276	ALS4-1024-225	.INSERT,SCREW THREAD 10-24..... UOC:TTA,TT1	24
* 6	PAOZZ		0NM25	ZG-7099	SEAL,NONMETALLIC..... UOC:TTA,TT1	1
* 7	PAOZZ	5305002693240	80204	B1821BH038F150N	SCREW,CAP,HEXAGON H 3/8-24 x 1-1/2.. UOC:TTA,TT1	11
* 8	PAOZZ	5310006379541	80045	23MS35338-46	WASHER,LOCK 3/8..... UOC:TTA,TT1	13
* 9	PAOZZ	5310014124013	24617	2436163	WASHER,FLAT 3/8..... UOC:TTA,TT1	13
* 10	PAOZZ	5340015732730	19207	12518731	PLATE,MOUNTING..... UOC:TTA,TT1	1
* 11	PAOZZ	5340014342864	34623	12340648	LATCH,RIM..... UOC:TTA,TT1	2
* 12	PAOZZ	5365015738386	19207	12518524	SPACER,TAPERED..... UOC:TTA,TT1	2
* 13	PAOZZ	5305008213869	80204	B1821BH038C175N	SCREW,CAP,HEXAGON H 3/8-16 X 1.75... UOC:TTA,TT1	2
* 14	PAOZZ	5340015718804	3M915	39105002H400A	PLUG,PINETREE..... UOC:TTA,TT1	2

END OF FIGURE

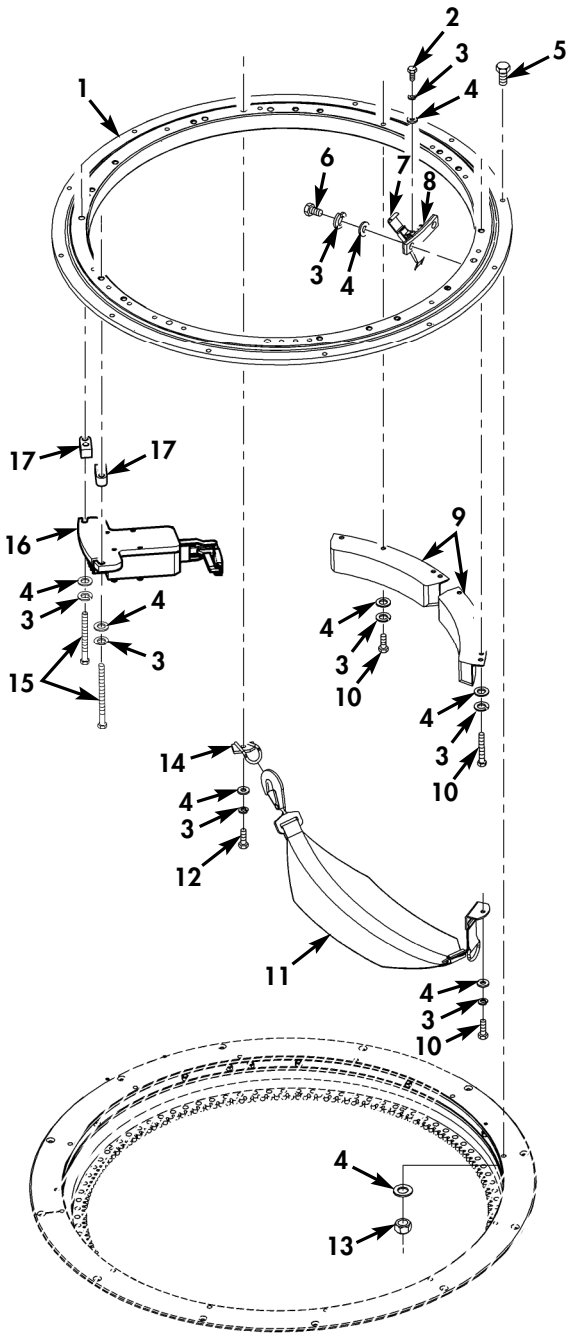

Figure 200C. Weapon Station, Brake Assembly, Gunner's Sling, and Related Parts.

(1) ITEM NO	(2) SMR CODE	(3) NSN	(4) CAGEC	(5) PART NUMBER	(6) DESCRIPTION AND USABLE ON CODES(UOC)	(7) QTY
					GROUP 1801 BODY,CAB,HOOD,AND HULL ASSEMBLY	
					FIG. 200C WEAPON STATION,BRAKE ASSEMBLY,GUNNER'S SLING, AND RELATED PARTS	
* 1	PAOZZ	5330015716218	28666	T2H2-38P2A	SEAL,PLAIN ENCASED..... UOC:TTA,TT1	1
* 2	PAOZZ	5305002693234	80204	B1821BH038F075N	SCREW,CAP,HEXAGON H 3/8-24 X 3/4.... UOC:TTA,TT1	1
* 3	PAOZZ	5310006379541	80045	23MS35338-46	WASHER,LOCK 3/8..... UOC:TTA,TT1	11
* 4	PAOZZ	5310014124013	24617	2436163	WASHER,FLAT 3/8..... UOC:TTA,TT1	23
* 5	PAOZZ	5305009837452	96906	MS16998-78	SCREW,CAP,SOCKET HE 3/8-24 X 2.00... UOC:TTA,TT1	12
* 6	PAOZZ	5305002693236	80204	B1821BH038F100N	SCREW,CAP,HEXAGON H 3/8-24 X 1.00... UOC:TTA,TT1	2
* 7	PAOZZ	5340014342864	34623	12340648	LATCH,RIM..... UOC:TTA,TT1	1
* 8	PAOZZ	5340015699478	34623	6045022	BRACKET,MOUNTING..... UOC:TTA,TT1	1
* 9	PAOZZ	2590012047836	19207	12340313	PAD,CUSHIONING..... UOC:TTA,TT1	2
* 10	PAOZZ	5305005434372	80204	B1821BH038C075N	SCREW,CAP,HEXAGON H 3/8-16 X 3/4.... UOC:TTA,TT1	5
* 11	PAOZZ	5340015301744	98313	FDC9902	STRAP,WEBBING..... UOC:TTA,TT1	1
* 12	PAOZZ	5305002693240	80204	B1821BH038F150N	SCREW,CAP,HEXAGON H 3/8-24 X 1-1/2.. UOC:TTA,TT1	1
* 13	PAOZZ	5310015529654	96906	M45913/4-6FG8Z	NUT,SELF-LOCKING,HE 3/8..... UOC:TTA,TT1	12
* 14	PAOZZ	2590011974899	19207	12340293	HOOK,GUNNER SLING..... UOC:TTA,TT1	1
* 15	PAOZZ	5305002693248	80204	B1821BH038F350N	SCREW,CAP,HEXAGON H 3/8-24 X 3.50... UOC:TTA,TT1	2
* 16	PAOZZ	5340015174192	6W728	1000545	LEVER,LOCK-RELEASE..... UOC:TTA,TT1	1
* 17	PAOZZ	5365015717724	19207	12518534	SPACER,PLATE..... UOC:TTA,TT1	2

END OF FIGURE

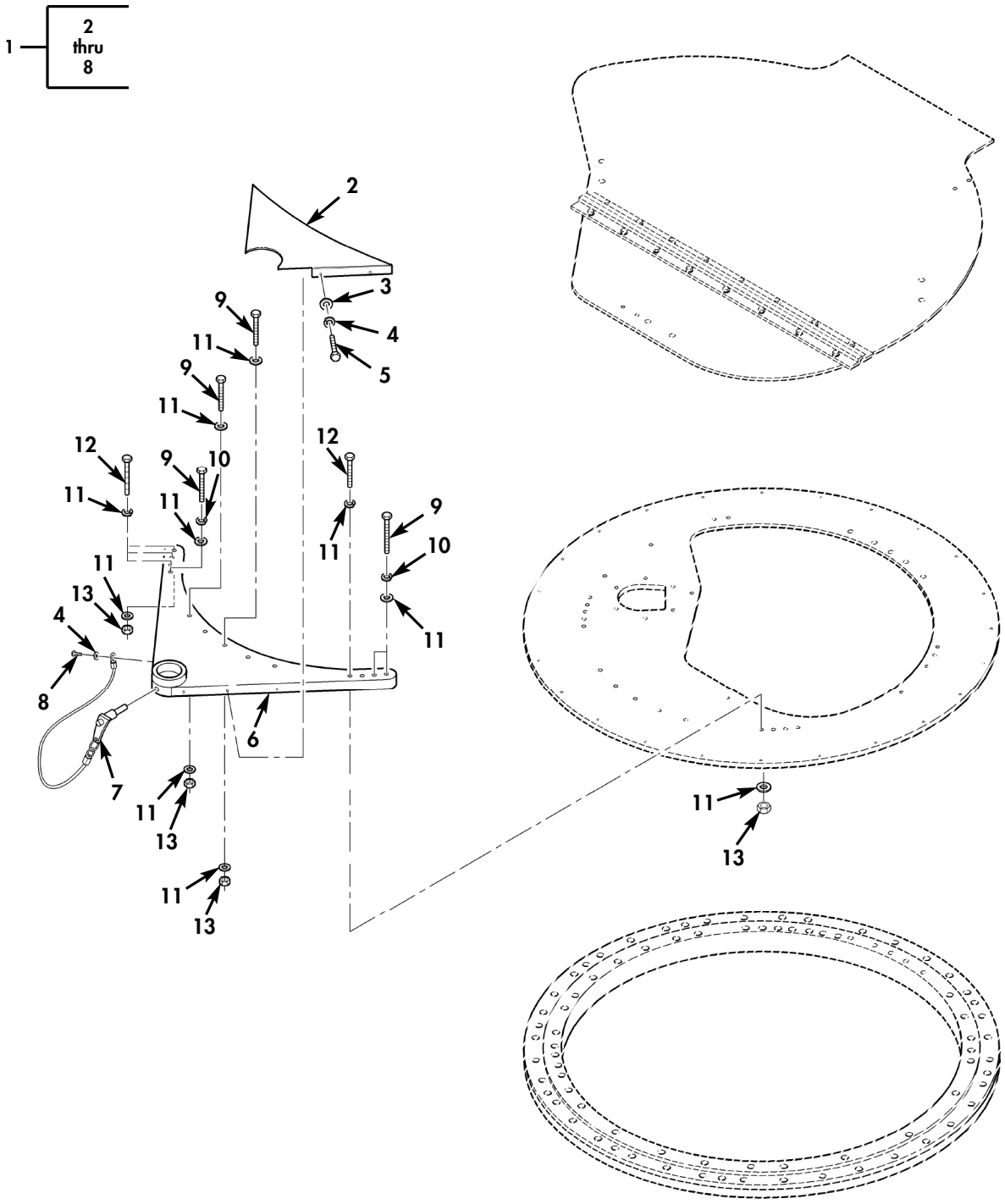

Figure 200D. Pintle Assembly and Related Parts.

(1) ITEM NO	(2) SMR CODE	(3) NSN	(4) CAGEC	(5) PART NUMBER	(6) DESCRIPTION AND USABLE ON CODES(UOC)	(7) QTY
					GROUP 1801 BODY,CAB,HOOD,AND HULL ASSEMBLY	
					FIG. 200D PINTLE ASSEMBLY AND RELATED PARTS	
* 1	AOOOO		19207	12518538	BASE ASSEMBLY..... UOC:TT1	1
* 2	PAOZZ	5340015495729	6W728	1000410	.COVER,ACCESS..... UOC:TT1	1
* 3	PAOZZ	5310014177333	6W728	4397005-008	.WASHER,FLAT 3/8..... UOC:TT1	4
* 4	PAOZZ	5310014341385	6W728	4397004-005	.WASHER,LOCK .190..... UOC:TT1	5
* 5	PAOZZ	5305014307397	6W728	4397013-072	.SCREW,MACHINE .190-32 X .500..... UOC:TT1	4
* 6	PAOZZ	5340015502511	6W728	1000414	.BRACKET,ANGLE..... UOC:TT1	1
* 7	PAOZZ	5340014364363	6W728	4668969-004	.HANDLE,MANUAL CONTR..... UOC:TT1	1
* 8	PAOZZ	5305014340832	6W728	4397013-070	.SCREW,MACHINE .190-32 X .375..... UOC:TT1	1
* 9	PAOZZ	5305002693247	80204	B1821BH038F325N	SCREW,CAP,HEXAGON H 3/8-24 X 3.25 PART OF KIT P/N 57K4907..... UOC:TT1	5
* 10	PAOZZ	5310006379541	80045	23MS35338-46	WASHER,LOCK 3/8 PART OF KIT P/N 57K4907..... UOC:TT1	5
* 11	PAOZZ	5310014124013	24617	2436163	WASHER,FLAT 3/8 PART OF KIT P/N 57K4907..... UOC:TT1	17
* 12	PAOZZ	5305002694530	96906	MS90727-77	SCREW,CAP,HEXAGON H 3/8-24 X 4.75 PART OF KIT P/N 57K4907..... UOC:TT1	6
* 13	PAOZZ	5310015529654	96906	M45913/4-6FG8Z	NUT,SELF-LOCKING,HE PART OF KIT P/N 57K4907..... UOC:TT1	6

END OF FIGURE

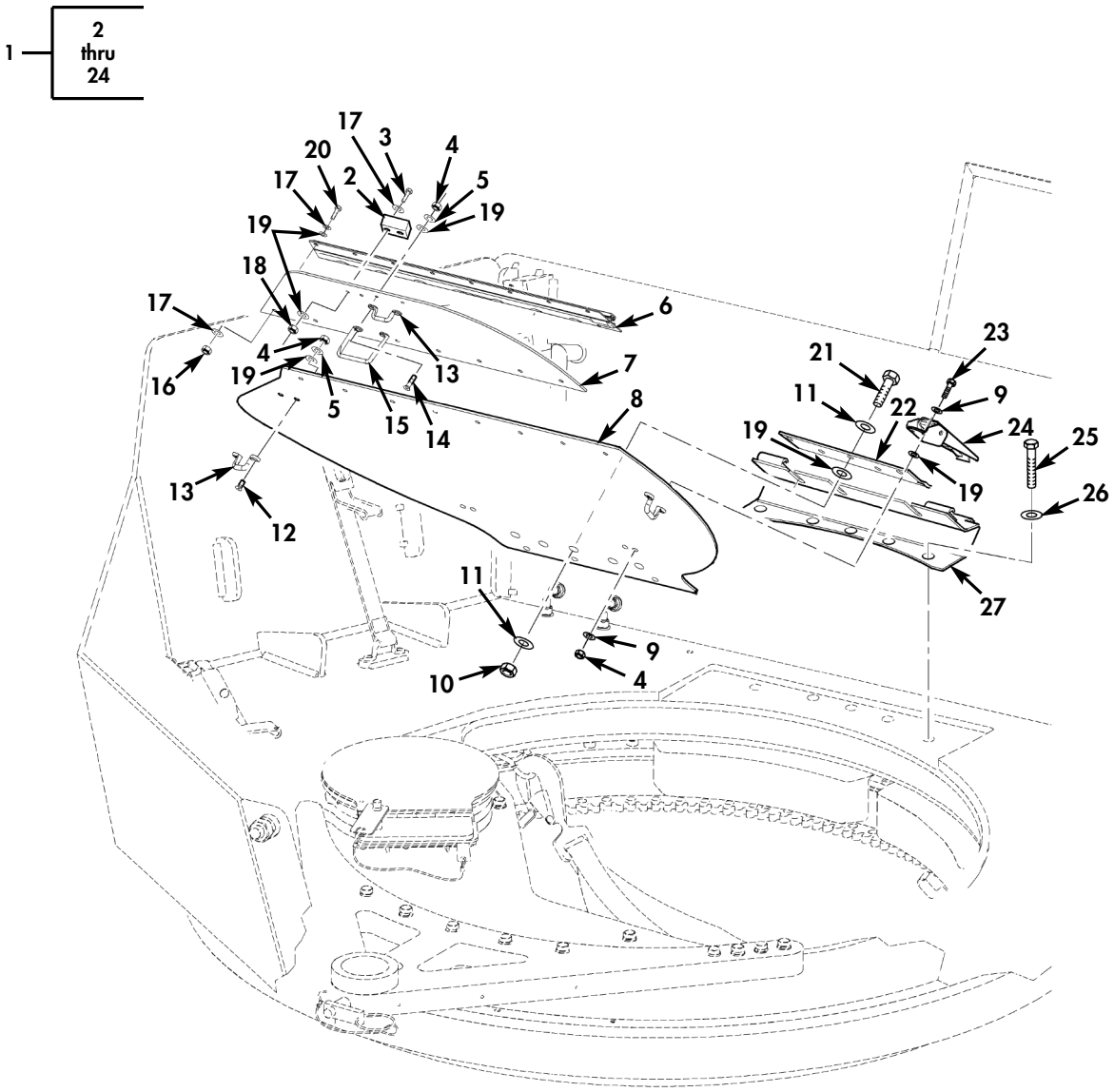

Figure 200E. Turret Hatch and Hinge Assembly.

(1) ITEM NO	(2) SMR CODE	(3) NSN	(4) CAGEC	(5) PART NUMBER	(6) DESCRIPTION AND USABLE ON CODES(UOC)	(7) QTY
					GROUP 1801 BODY,CAB,HOOD,AND HULL ASSEMBLY	
					FIG. 200E TURRET HATCH AND HINGE ASSEMBLY	
* 1	PAOOO		19207	12518734	HATCH ASSEMBLY, QUI..... UOC:TT1	1
* 2	PAOZZ	5340014195188	39428	9306K14	.BUMPER,NONMETALLIC..... UOC:TT1	1
* 3	PAOZZ	5305009887613	80205	MS16995-49	.SCREW,CAP,SOCKET HE 10-24 X 1..... UOC:TT1	2
* 4	PAOZZ		81349	M45913/4-010CG8Z	.NUT,SELF-LOCKING,HE #10-24..... UOC:TT1	10
* 5	PAOZZ	5310000145850	96906	MS27183-42	.WASHER,FLAT #10..... UOC:TT1	6
* 6	PAOZZ	2510015717763	39428	1381A33	.HINGE,DOOR,VEHICULA..... UOC:TT1	1
* 7	PAOZZ	2510015733898	19207	12518730	.DOOR,HATCH,VEHICLE..... UOC:TT1	1
* 8	PAOZZ	2510015732854	19207	12518683	.HATCH,ROOF,ASSY..... UOC:TT1	1
* 9	PAOZZ	5310004022778	24617	9416128	.WASHER,FLAT #10..... UOC:TT1	8
* 10	PAOZZ	5310015529654	96906	M45913/4-6FG8Z	.NUT,SELF-LOCKING,HE 3/8-16..... UOC:TT1	5
* 11	PAOZZ	5310014124013	24617	2436163	.WASHER,FLAT 3/8..... UOC:TT1	10
* 12	PAOZZ	5305009585471	45152	1507170	.SCREW,MACHINE #10-24 X .875..... UOC:TT1	4
* 13	PAOZZ	5340014341809	19207	12338839-3	.STRAP,RETAINING..... UOC:TT1	3
* 14	PAOZZ	5305009846212	80205	MS35206-265	.SCREW,MACHINE #10-24 X 3/4..... UOC:TT1	2
* 15	PAOZZ	5340015715549	19207	12518728	.HANDLE..... UOC:TT1	1
* 16	PAOZZ	5310015481269	81349	M45913/4-4CG8Z	.NUT,SELF-LOCKING,HE 1/4-20..... UOC:TT1	16
* 17	PAOZZ	5310011023270	24617	2436161	.WASHER,FLAT 1/4..... UOC:TT1	34
* 18	PAOZZ	5310015187173	81349	M45913/3-4CG8Z	.NUT,SELF-LOCKING 1/4-20..... UOC:TT1	2
* 19	PAOZZ	5310015483774	34623	6016730	.WASHER,SEAL..... UOC:TT1	33
* 20	PAOZZ	5305000680508	80204	B1821BH025C075N	.SCREW,CAP,HEXAGON H 1/4-20 X 3/4... UOC:TT1	16
* 21	PAOZZ	5305011409118	80204	B1821BH038C088N	.SCREW,CAP,HEXAGON H 3/8-16 X 7/8... UOC:TT1	5
* 22	PAOZZ	5340015717747	19207	12518684	.BRACKET,MOUNTING..... UOC:TT1	1
* 23	PAOZZ	5305010062053	96906	MS51849-75	.SCREW,MACHINE #10-24 X 5/8..... UOC:TT1	4
* 24	PAOZZ	5340012065040	19207	12340628	.CATCH,CLAMPING..... UOC:TT1	2
* 25	PAOZZ	5305002693240	80204	B1821BH038F150N	SCREW,CAP,HEXAGON H 3/8-24 x 1-1/2.. UOC:TT1	5

(1) ITEM NO	(2) SMR CODE	(3) NSN	(4) CAGEC	(5) PART NUMBER	(6) DESCRIPTION AND USABLE ON CODES(UOC)	(7) QTY
* 26	PAOZZ	5310014124013	24617	2436163	WASHER,FLAT 3/8..... UOC:TT1	5
* 27	PAOZZ	2510015732854	19207	12518680	HINGE,BUTT..... UOC:TT1	1

END OF FIGURE

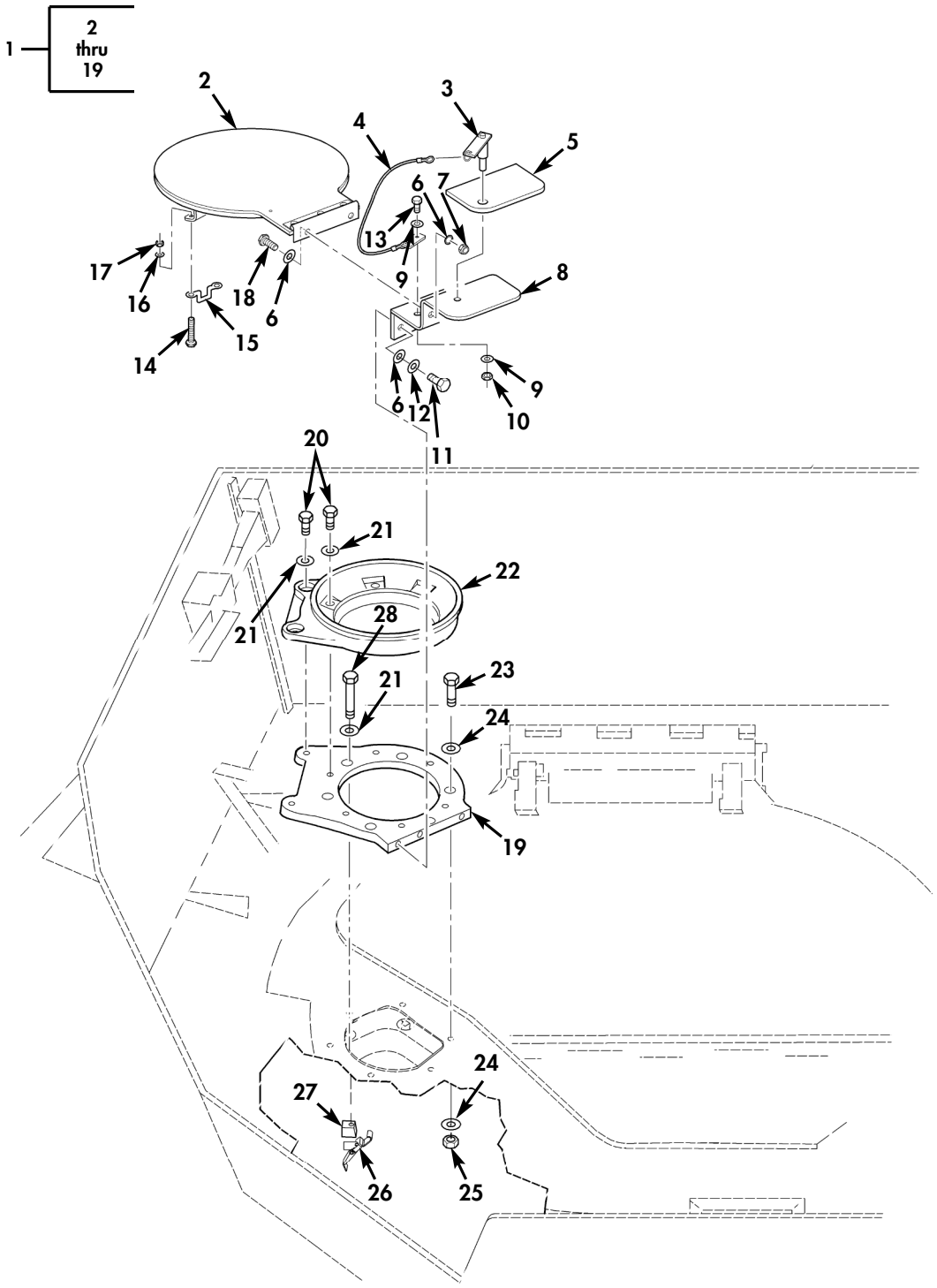

Figure 200F. Tow Mount Pedestal Assembly.

(1) ITEM NO	(2) SMR CODE	(3) NSN	(4) CAGEC	(5) PART NUMBER	(6) DESCRIPTION AND USABLE ON CODES(UOC)	(7) QTY
					GROUP 1801 BODY,CAB,HOOD,AND HULL ASSEMBLY	
					FIG. 200F TOW MOUNT PEDESTAL ASSEMBLY	
* 1	PAOOO		19207	12518671	COVER,TURRET BASE..... UOC:TT1	1
* 2	PAOZZ		19207	12518673	.COVER,PEDESTAL..... UOC:TT1	1
* 3	PAOZZ	5315008865726	80205	MS17986C305	.PIN,QUICK RELEASE..... UOC:TT1	1
* 4	PAOZZ	4010014660849	19207	12342287	.WIRE ROPE ASSEMBLY..... UOC:TT1	1
* 5	PAOZZ	2590015718477	19207	12518678	.PAD,CUSHIONING..... UOC:TT1	1
* 6	PAOZZ	5310011023270	24617	2436161	.WASHER,FLAT 1/4..... UOC:TT1	7
* 7	PAOZZ	5310000614650	81349	M45913/3-4CG8C	.NUT,SELF-LOCKING,HE 1/4-20..... UOC:TT1	2
* 8	PAOZZ	5340015709622	19207	12518679	.BRACKET,ANGLE..... UOC:TT1	1
* 9	PAOZZ	5310012349416	96906	MS51412-2	.WASHER,FLAT #10..... UOC:TT1	2
* 10	PAOZZ	5310009416019	80205	MS21083N08	.NUT,SELF-LOCKING,HE #8-32..... UOC:TT1	1
* 11	PAOZZ	5305000680508	80204	B1821BH025C075N	.SCREW,CAP,HEXAGON H 1/4-20 X 3/4... UOC:TT1	3
* 12	PAOZZ	5310005825965	80205	MS35338-44	.WASHER,LOCK 1/4..... UOC:TT1	3
* 13	PAOZZ	5305001159934	96906	MS51849-55	.SCREW,MACHINE #8-32 X 5/8..... UOC:TT1	1
* 14	PAOZZ	5305014108386	24617	156966	.SCREW,MACHINE #10-24 X 5/8..... UOC:TT1	2
* 15	PAOZZ	5340014341809	19207	12338839-3	.STRAP,RETAINING..... UOC:TT1	1
* 16	PAOZZ	5310004022778	24617	9416128	.WASHER,FLAT #10..... UOC:TT1	2
* 17	PAOZZ		81349	M45913/4-010CG8Z	.NUT,SELF-LOCKING,HE 10-24..... UOC:TT1	2
* 18	PAOZZ	5305000712505	80204	B1821BH025C088N	.SCREW,CAP,HEXAGON H 1/4-20 X 7/8... UOC:TT1	2
* 19	PAOZZ	5365015717848	19207	12518670	.SPACER,PLATE..... UOC:TT1	1
* 20	PAOZZ	5305005434372	80204	B1821BH038C075N	SCREW,CAP,HEXAGON H 3/8-16 X 3/4.... UOC:TT1	8
* 21	PAOZZ	5310014573292	34623	12469426	WASHER,LOCK..... UOC:TT1	9
* 22	PAOZZ	2590011899736	19207	12339679-1	PEDESTAL ASSEMBLY,T..... UOC:TT1	1
* 23	PAOZZ	5305002693240	80204	B1821BH038F150N	SCREW,CAP,HEXAGON H 3/8-24 x 1-1/2.. UOC:TT1	5
* 24	PAOZZ	5310014124013	24617	2436163	WASHER,FLAT 3/8..... UOC:TT1	10
* 25	PAOZZ	5310015529654	96906	M45913/4-6FG8Z	NUT,SELF-LOCKING,HE 3/8-16..... UOC:TT1	5

(1) ITEM NO	(2) SMR CODE	(3) NSN	(4) CAGEC	(5) PART NUMBER	(6) DESCRIPTION AND USABLE ON CODES(UOC)	(7) QTY
* 26	PAOZZ	5340014342864	34623	12340648	LATCH,RIM..... UOC:TT1	1
* 27	PAOZZ	5365015719831	19207	12528644	SPACER,PLATE..... UOC:TT1	1
* 28	PAOZZ	5305008213869	80204	B1821BH038C175N	SCREW,CAP,HEXAGON H 3/8-16 X 1.75... UOC:TT1	1

END OF FIGURE

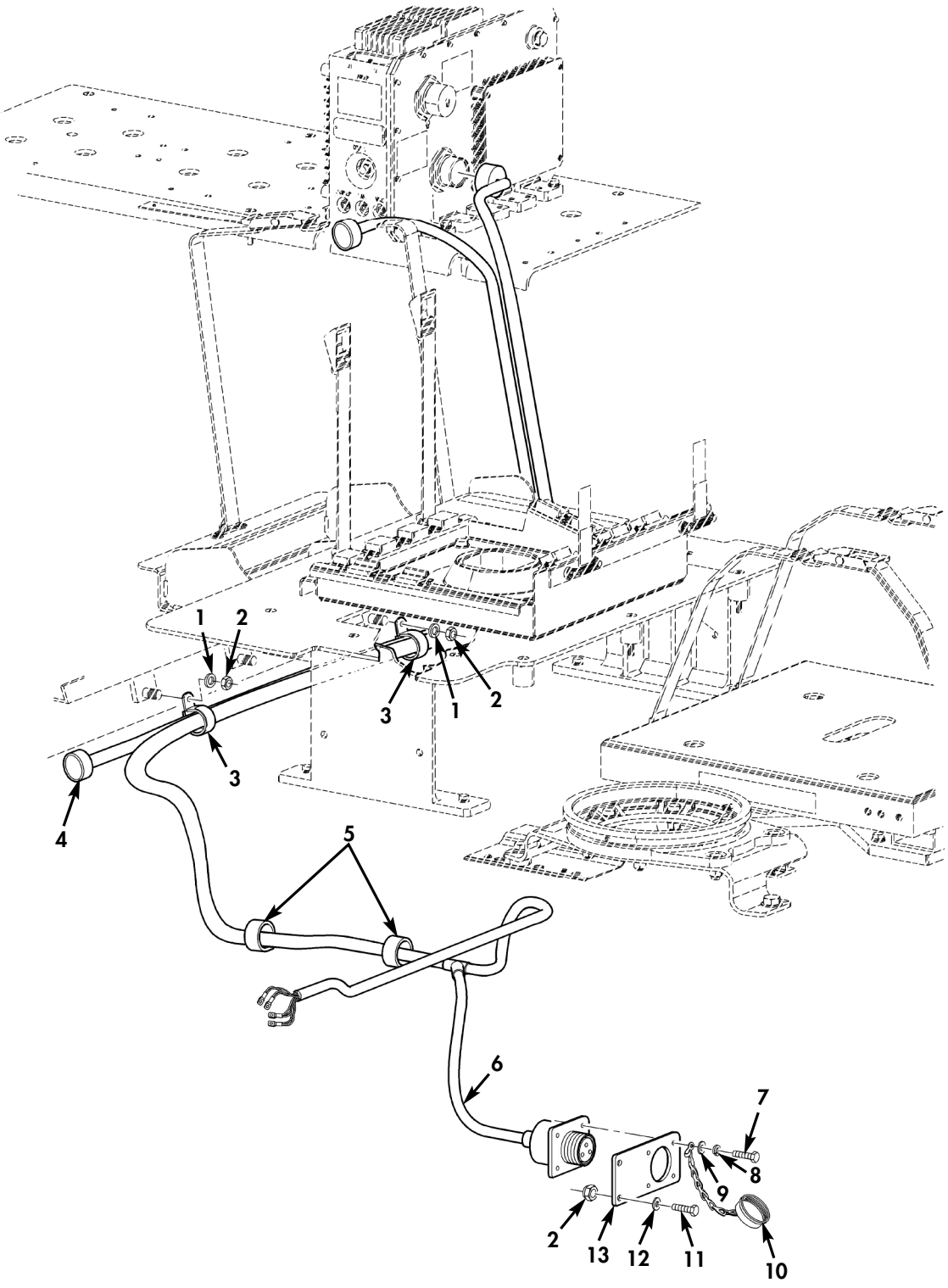

Figure 200G. Tow ITAS Cable Assembly.

(1) ITEM NO	(2) SMR CODE	(3) NSN	(4) CAGEC	(5) PART NUMBER	(6) DESCRIPTION AND USABLE ON CODES(UOC)	(7) QTY
					GROUP 1801 BODY,CAB,HOOD,AND HULL ASSEMBLY	
					FIG. 200G TOW ITAS CABLE ASSEMBLY	
* 1	PAOZZ	5310014124013	24617	2436163	WASHER,FLAT 3/8..... UOC:TT1	2
* 2	PAOZZ	5310015481269	81349	M45913/4-4CG8Z	NUT,SELF-LOCKING,HE..... UOC:TT1	4
* 3	PAOZZ	5340007022848	80205	MS21333-128	CLAMP,LOOP..... UOC:TT1	2
* 4	PAOZZ	6150014572964	18876	13493198	CABLE ASSEMBLY,ITAS BATTERY POWER SOURCE TO FIRE CONTROL SUBSYSTEM.... UOC:TT1	1
* 5	PAOZZ	5340000572906	96906	MS21333-73	CLAMP,LOOP..... UOC:TT1	2
* 6	PAOZZ	6150015732775	96214	6632583	CABLE ASSY,SPECIAL..... UOC:TT1	1
* 7	PAOZZ	5305008550963	80205	MS24629-26	SCREW,TAPPING #6-32 X .75..... UOC:TT1	4
* 8	PAOZZ	5310000454007	80205	MS35338-41	WASHER,LOCK #6..... UOC:TT1	4
* 9	PAOZZ	5310009838483	96906	MS27183-5	WASHER,FLAT..... UOC:TT1	4
* 10	PAOZZ	5935012239420	96906	MS25043-22DA	COVER,ELECTRICAL CO..... UOC:TT1	1
* 11	PAOZZ	5305000712505	80204	B1821BH025C088N	SCREW,CAP,HEXAGON H 1/4-20 X 7/8.... UOC:TT1	2
* 12	PAOZZ	5310008094058	96906	MS27183-10	WASHER,FLAT 1/4..... UOC:TT1	2
* 13	PAOZZ	5340015718413	19207	12518576	MOUNTING BRACKET..... UOC:TT1	1

END OF FIGURE

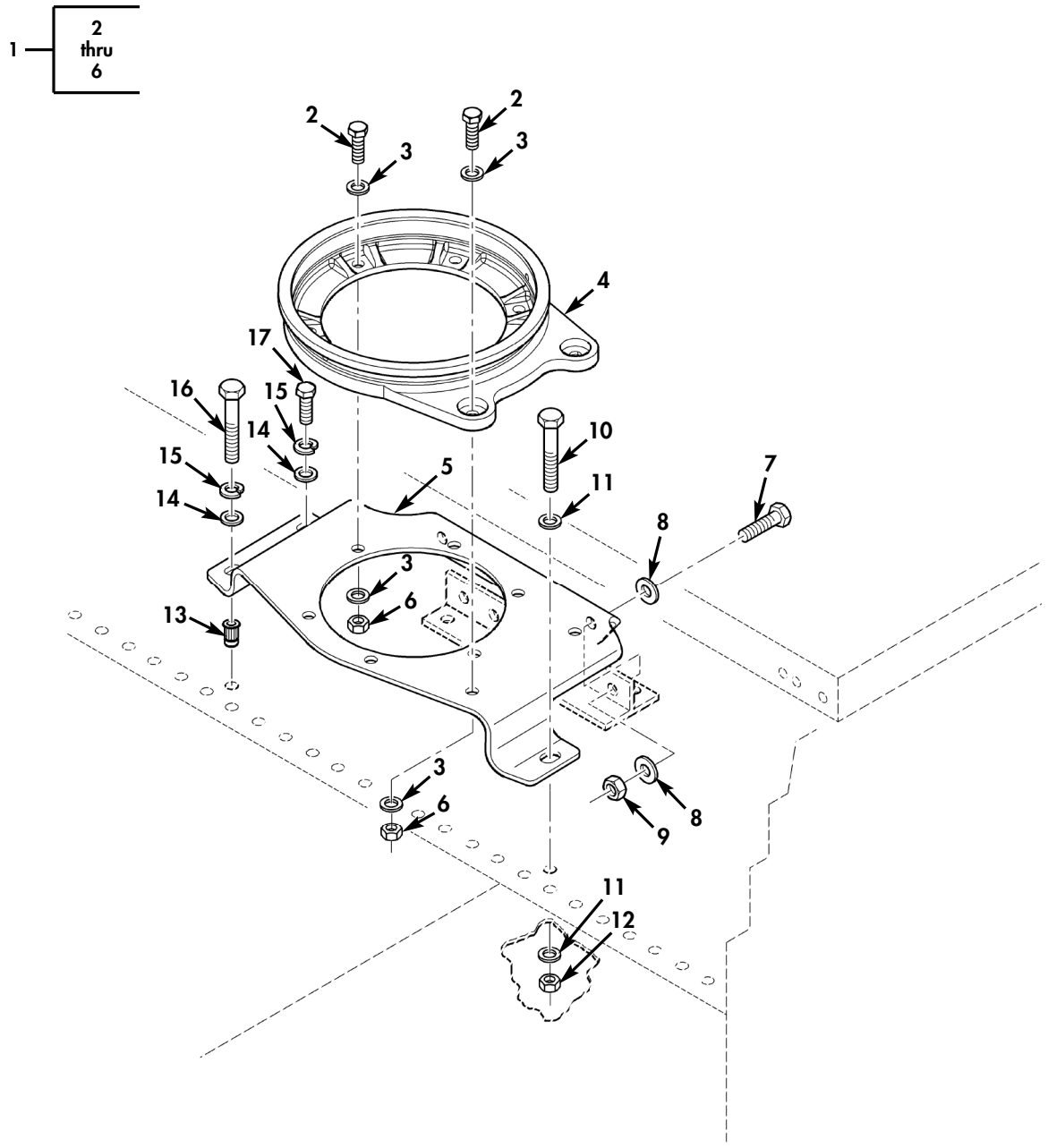

Figure 200H. Traversing Unit Stowage and Depression Stop Assembly (Sheet 1 of 2).

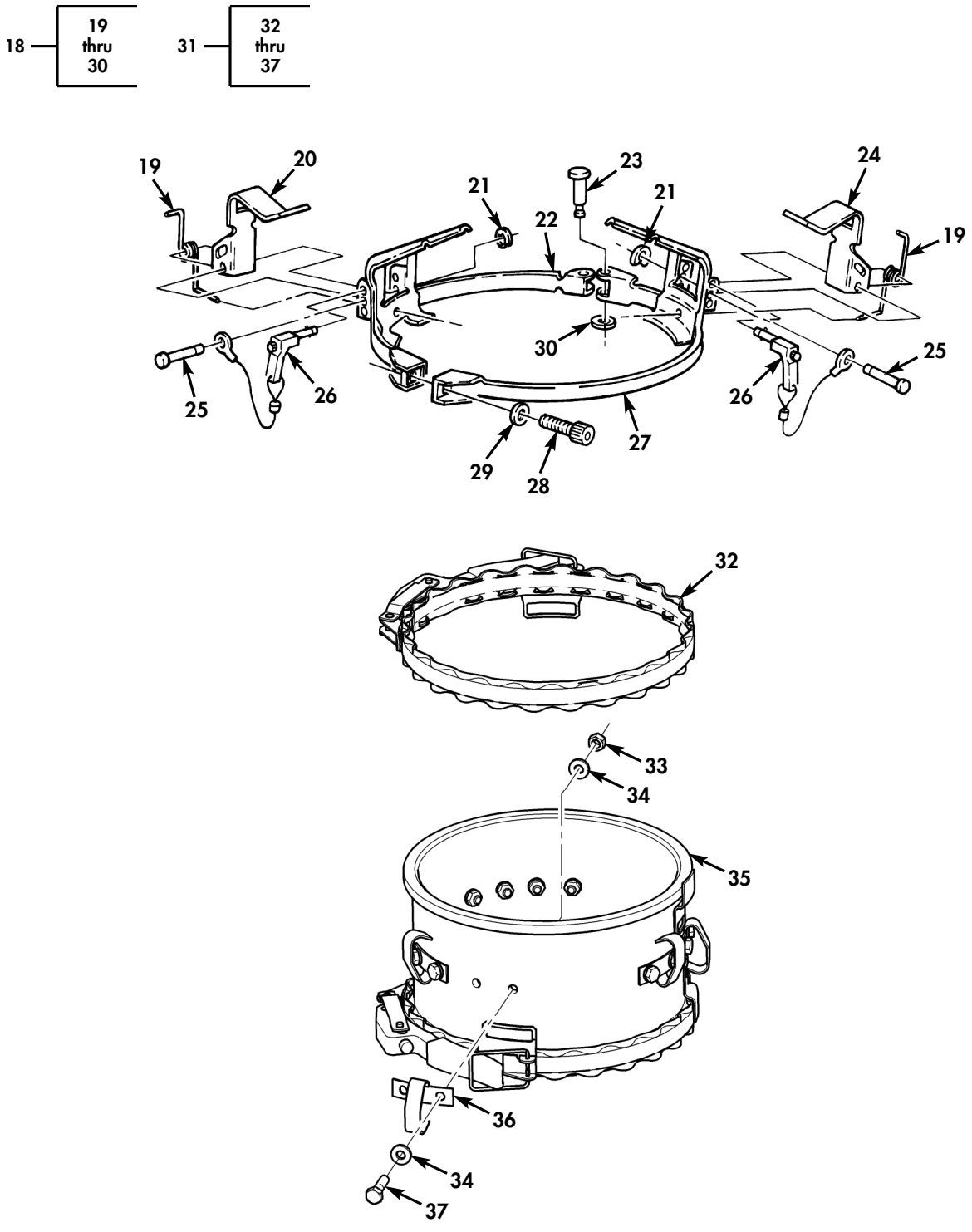

Figure 200H. Traversing Unit Stowage and Depression Stop Assembly (Sheet 2 of 2).

(1) ITEM NO	(2) SMR CODE	(3) NSN	(4) CAGEC	(5) PART NUMBER	(6) DESCRIPTION AND USABLE ON CODES(UOC)	(7) QTY
					GROUP 1801 BODY,CAB,HOOD,AND HULL ASSEMBLY	
					FIG. 200H TRAVERSING UNIT STOWAGE AND DEPRESSION STOP ASSEMBLY	
* 1	AOOOO		19207	12518571	PEDESTAL ASSEMBLY,T..... UOC:TT1	1
* 2	PAOZZ	5305000680510	80204	B1821BH038C100N	.SCREW,CAP,HEXAGON H 3/8-16 X 1.00.. UOC:TT1	8
* 3	PAOZZ	5310014124013	24617	2436163	.WASHER,FLAT 3/8..... UOC:TT1	16
* 4	PAOZZ	2590011899736	19207	12339679-1	.PEDESTAL ASSEMBLY,T..... UOC:TT1	1
* 5	PBOZZ	5340015709322	19207	12518584	.BRACKET,MULTIPLE AN..... UOC:TT1	1
* 6	PAOZZ	5310015003209	81349	M45913/3-6CG8Z	.NUT,SELF-LOCKING,HE 3/8..... UOC:TT1	8
* 7	PAOZZ	5305000712505	80204	B1821BH025C088N	SCREW,CAP,HEXAGON H 1/4-20 x 7/8.... UOC:TT1	2
* 8	PAOZZ	5310011023270	24617	2436161	WASHER,FLAT 1/4..... UOC:TT1	4
* 9	PAOZZ	5310015481269	81349	M45913/4-4CG8Z	NUT,SELF-LOCKING,HE..... UOC:TT1	2
* 10	PAOZZ	5305000712070	80204	B1821BH050C175N	SCREW,CAP,HEXAGON H 1/2-13 X 1.75... UOC:TT1	1
* 11	PAOZZ	5310011211703	24617	2436165	WASHER,FLAT 1/2..... UOC:TT1	2
* 12	PAOZZ	5310015481848	81349	M45913/4-8CG8Z	NUT,SELF-LOCKING,HE 3/8..... UOC:TT1	1
* 13	PAOZZ	5325014837480	78276	ALS4-616-150	INSERT,SCREW THREAD..... UOC:TT1	2
* 14	PAOZZ	5310014124013	24617	2436163	WASHER,FLAT 3/8..... UOC:TT1	2
* 15	PAOZZ	5310000045033	80205	MS35338-46	WASHER,LOCK 3/8..... UOC:TT1	2
* 16	PAOZZ	5305008213869	80204	B1821BH038C175N	SCREW,CAP,HEXAGON H 3/8-16 X 1.75... UOC:TT1	1
* 17	PAOZZ	5305000680511	80204	B1821BH038C125N	SCREW,CAP,HEXAGON H 3/8-16 X 1-1/4.. UOC:TT1	1
* 18	PAOOO	2590011885081	34623	5583676	STOP ASSEMBLY,ELEVA..... UOC:TT1	1
* 19	PAOZZ	5360011012143	92830	TO48-270-250L	.SPRING,HELICAL,TORS..... UOC:TT1	2
* 20	PAOZZ	5340011976716	34623	5584105	.BRACKET..... UOC:TT1	1
* 21	PAOZZ	5325007208064	96906	MS16624-1025	.RING,RETAINING..... UOC:TT1	2
* 22	PAOZZ	5340012035629	34623	5584135	.STRAP,RETAINING..... UOC:TT1	1
* 23	PAOZZ	5315011973122	19207	12340053	.PIN,GROOVED,HEADED..... UOC:TT1	1
* 24	PAOZZ	5340011976715	19207	12339672	.BRACKET,MOUNTING..... UOC:TT1	1
* 25	PAOZZ	5315011983346	34623	5584107	.PIN,GROOVED,HEADED..... UOC:TT1	2

(1) ITEM NO	(2) SMR CODE	(3) NSN	(4) CAGEC	(5) PART NUMBER	(6) DESCRIPTION AND USABLE ON CODES(UOC)	(7) QTY
* 26	PAOZZ	5315009738637	80205	MS17986C416	.PIN,QUICK RELEASE..... UOC:TT1	2
* 27	PAOZZ	5340012035630	34623	5584136	.STRAP,RETAINING..... UOC:TT1	1
* 28	PAOZZ	5305012640923	96906	MS51480-05	.SCREW,CAP,SOCKET HE 1/4-28 X 1.50.. UOC:TT1	1
* 29	PAOZZ	5310011023270	24617	2436161	.WASHER,FLAT 1/4..... UOC:TT1	1
* 30	PAOZZ	5325011965631	7X677	11505885	.RING,RETAINING..... UOC:TT1	1
* 31	PAOOO	2590011885079	19207	12339680	ADAPTER ASSEMBLY,TU..... UOC:TT1	1
* 32	PAOZZ	5342011047700	18876	13048915-1	.COUPLING,CLAMP,GROO..... UOC:TT1	2
* 33	PAOZZ	5310015481269	81349	M45913/4-4CG8Z	.NUT,SELF-LOCKING,HE..... UOC:TT1	12
* 34	PAOZZ	5310011023270	24617	2436161	.WASHER,FLAT 1/4..... UOC:TT1	12
* 35	XAOZZ		19207	12339682	.ADAPTER..... UOC:TT1	1
* 36	PAOZZ	5340011973478	19207	12339681	.CLIP,SPRING TENSION..... UOC:TT1	6
* 37	PAOZZ	5305000680508	80204	B1821BH025C075N	.SCREW,CAP,HEXAGON H 1/4-20 X .750.. UOC:TT1	12

END OF FIGURE

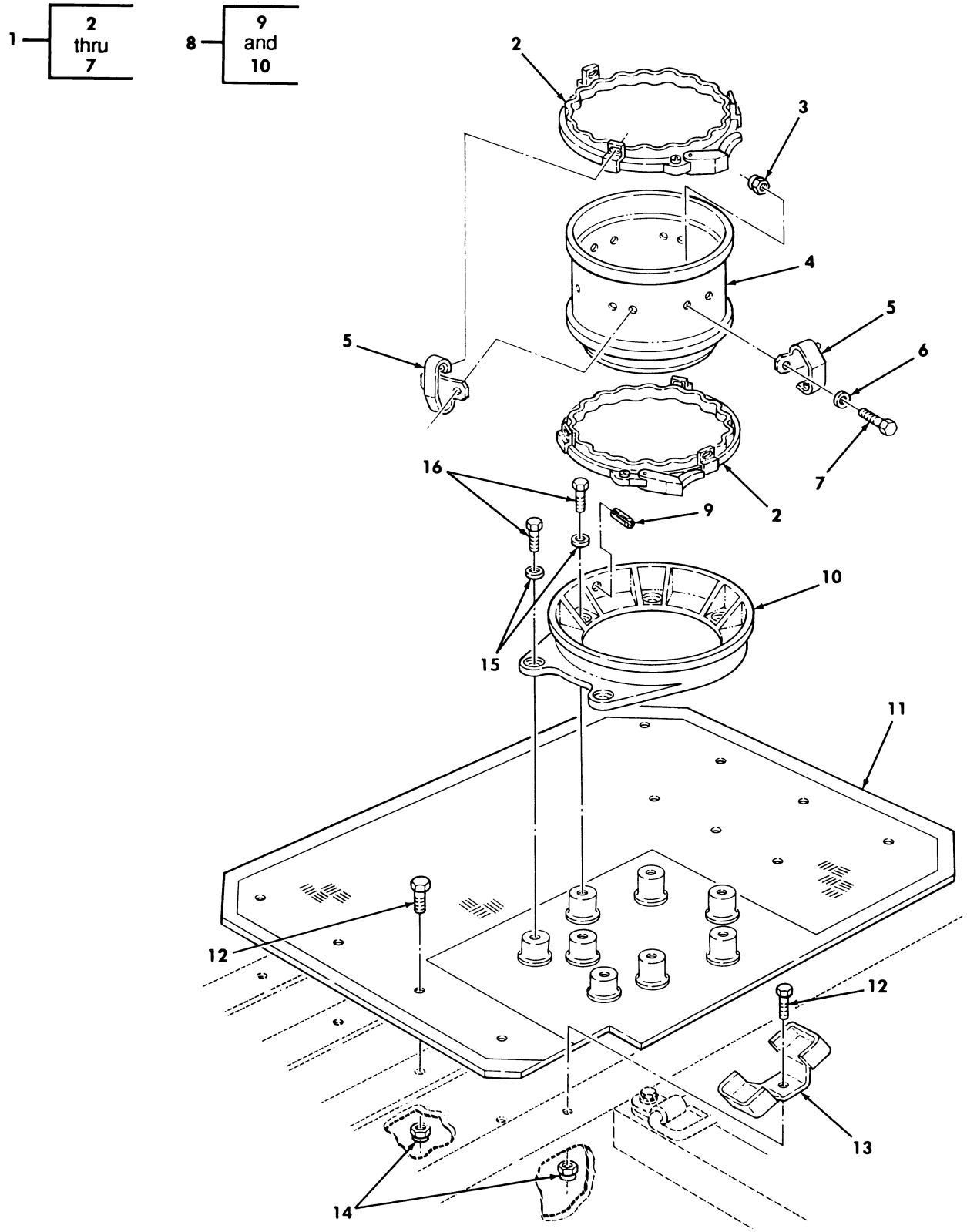

Figure 201. Gunner's Platform and Traversing Unit Stowage.

(1) ITEM NO	(2) SMR CODE	(3) NSN	(4) CAGEC	(5) PART NUMBER	(6) DESCRIPTION AND USABLE ON CODES(UOC)	(7) QTY
					GROUP 1801 BODY,CAB,HOOD,AND HULL ASSEMBLY	
					FIG. 201 GUNNER'S PLATFORM AND TRAVERSING UNIT STOWAGE	
1	PAOOO	2590011885079	19207	12339680	ADAPTER ASSEMBLY,TU..... UOC:XBB	1
2	PAOZZ	5342011047700	18876	13048915-1	.COUPLING,CLAMP,GROO..... UOC:XBB	2
3	PAOZZ	5310000614650	96906	MS51943-31	.NUT,SELF-LOCKING,HE 1/4-20..... UOC:XBB	12
4	XAOZZ		34623	5583120	.ADAPTER..... UOC:XBB	1
5	PAOZZ	5340011973478	34623	5583993	.CLIP,SPRING TENSION..... UOC:XBB	6
6	PAOZZ	5310011023270	24617	2436161	.WASHER,FLAT 1/4..... UOC:XBB	12
7	PAOZZ	5305000680502	96906	MS90725-6	.SCREW,CAP,HEXAGON H 1/4-20 X 3/4.. UOC:XBB	12
8	PAOZZ	2590011885080	19207	12339679-2	PEDESTAL ASSEMBLY,T..... UOC:XBB	1
9	PAOZZ	5315005973693	96906	MS171648	.PIN,SPRING 1/4-5/8..... UOC:XBB	1
10	PAOZZ	2590011899736	19207	12339679-1	.PEDESTAL ASSEMBLY,T..... UOC:XBB	1
11	PFOZZ	2540014350579	6W728	4660730	ARMOR,SUPPLEMENTAL,..... UOC:XBB	1
12	PAOZZ	5306014376309	6W728	4397010-006	BOLT,MACHINE..... UOC:XBB	9
13	PAOZZ	2590014385739	6W728	4660962	BRACKET,SMALL ARMS,..... UOC:XBB	1
14	PAOZZ	5325013942414	78276	ALS7-420-165	INSERT,SCREW THREAD .250-20..... UOC:XBB	9
15	PAOZZ	5310014192413	6W728	4397005-014	WASHER,FLAT .406..... UOC:XBB	8
* 16	PAOZZ	5305014480958	80204	B1821BH038C075N	SCREW,CAP HEXAGON H .375-16 X .750. UOC:XBB	8

END OF FIGURE

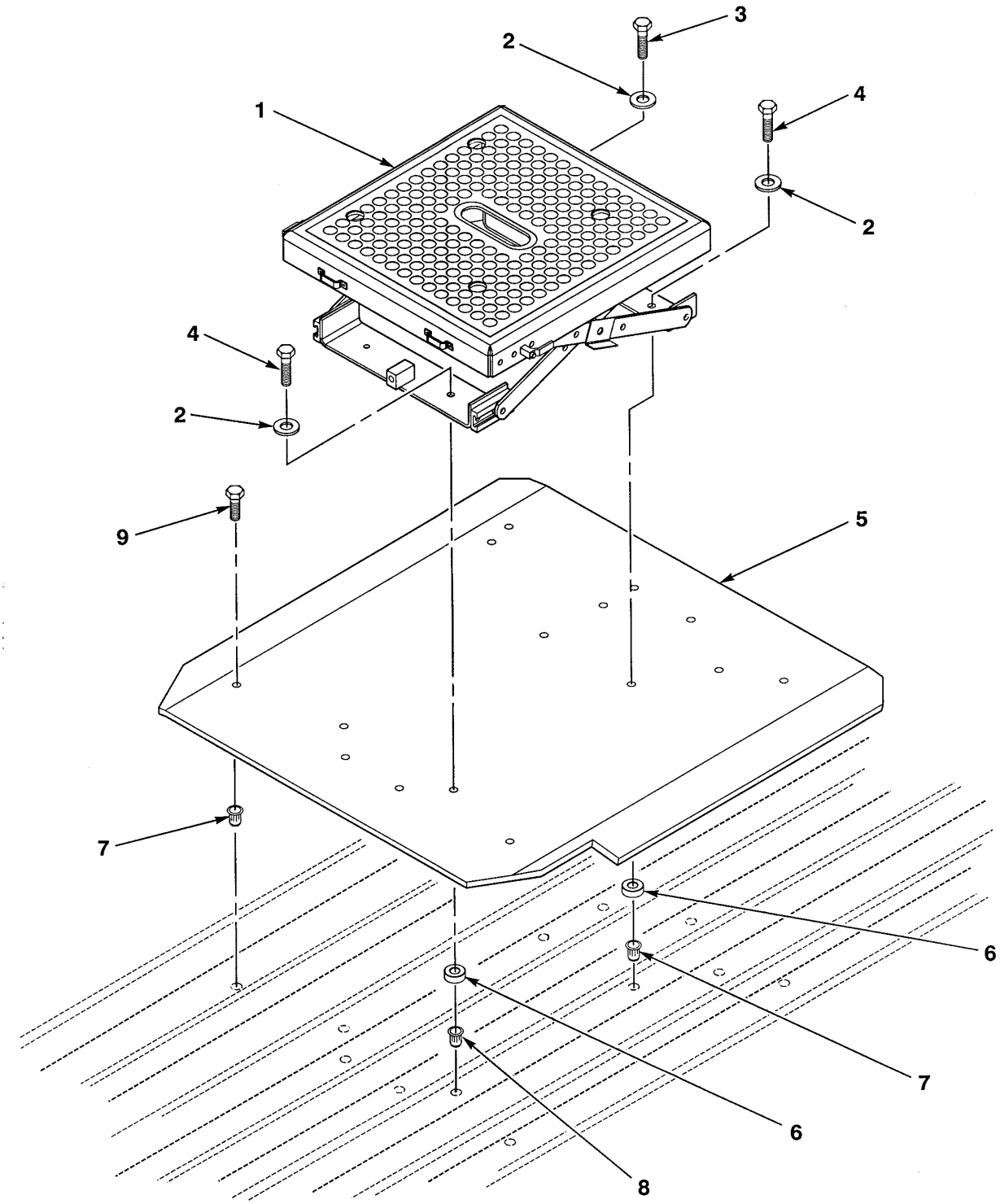

Figure 201A. Adjustable Gunner's Stand and Gunner's Platform.

(1) ITEM NO	(2) SMR CODE	(3) NSN	(4) CAGEC	(5) PART NUMBER	(6) DESCRIPTION AND USABLE ON CODES(UOC)	(7) QTY
					GROUP 1801 BODY,CAB,HOOD AND HULL ASSEMBLY	
					FIG. 201A ADJUSTABLE GUNNER'S STAND AND GUNNER'S PLATFORM	
* 1	PAOZZ	2510015207135	6W728	4662276	PLATFORM,GUNNERS..... UOC:XBB	1
* 2	PAOZZ	5310014357784	6W728	4397005-010	WASHER,FLAT .281 X .625..... UOC:XBB	4
* 3	PAOZZ	5305014366379	6W728	4397000-008	SCREW,CAP,HEXAGON 1/4-20 X 1.00.... UOC:XBB	1
* 4	PAOZZ	5306014206635	6W728	4397000-012	BOLT,MACHINE 1/4-20 X 1.50..... UOC:XBB	3
* 5	PAOZZ	2510015207145	6W728	1000323	PLATFORM,GUNNERS S..... UOC:XBB	1
* 6	PAOZZ	5365015134522	6W728	1000011-000	SPACER,GUNNERS PLA..... UOC:XBB	3
* 7	PAOZZ	5310015212135	6W728	4397050-025	NUT,PLAIN,BLIND RIV 1/4-20..... UOC:XBB	10
* 8	PAOZZ	5310015251238	6W728	4397050-028	NUT,PLAIN,BLIND RIV 1/4-20..... UOC:XBB	2
* 9	PAOZZ	5306014307399	6W728	4397000-006	BOLT,MACHINE 1/4-20 X 3/4..... UOC:XBB	8

END OF FIGURE

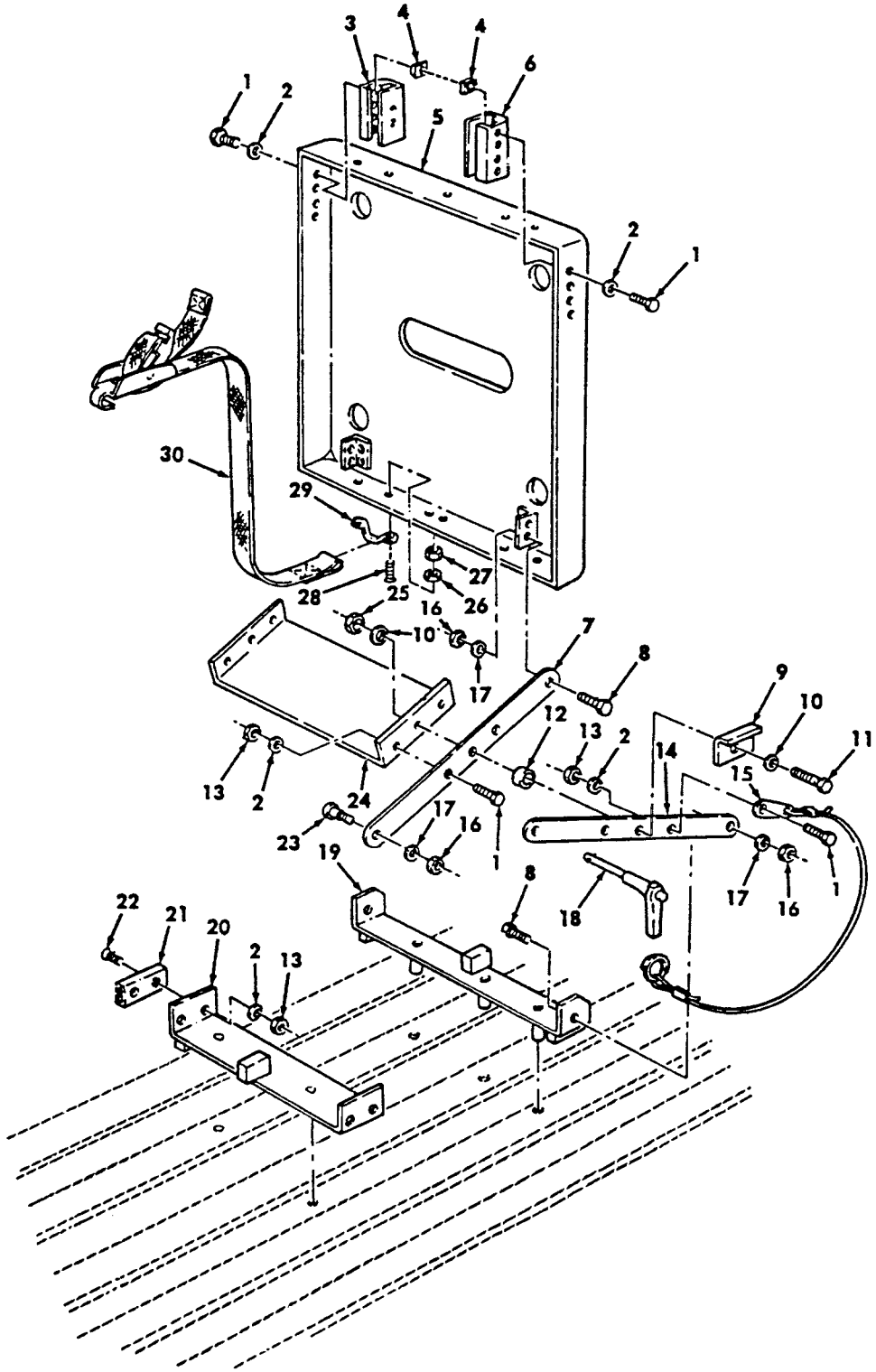

Figure 201B. Gunner's Platform Assembly and Mounting Hardware.

(1) ITEM NO	(2) SMR CODE	(3) NSN	(4) CAGEC	(5) PART NUMBER	(6) DESCRIPTION AND USABLE ON CODES(UOC)	(7) QTY
					GROUP 1801 BODY,CAB,HOOD AND HULL ASSEMBLY	
					FIG. 201B GUNNER'S PLATFORM ASSEMBLY AND MOUNTING HARDWARE	
* 1	PAOZZ	5305002678953	80204	B1821BH025F063N	SCREW,CAP,HEXAGON 1/4-28 X 5/8..... UOC:XBB	10
* 2	PAOZZ	5310001670835	88044	AN960-416L	WASHER,FLAT 1/4..... UOC:XBB	14
* 3	PAOZZ	2590012624980	31272	45602-11	GUIDE,PLATFORM..... UOC:XBB	1
* 4	PAOZZ	5310012984686	31272	45611-10	NUT,BLANK 1/4-28..... UOC:XBB	4
* 5	PAOZZ	2590012600214	31272	45481-01	PLATFORM ASSEMBLY..... UOC:XBB	1
* 6	PAOZZ	2590012624981	31272	45602-10	GUIDE,PLATFORM..... UOC:XBB	1
* 7	PAOZZ	3040012649554	31272	45617-13	CONNECTING LINK,RIG..... UOC:XBB	2
* 8	PAOZZ	5306012696254	31272	45621-10	BOLT,SHOULDER 5/16-24 X 3/4..... UOC:XBB	4
* 9	PAOZZ	5342012600215	31272	45721-10	LATCH,PLATFORM..... UOC:XBB	2
* 10	PAOZZ	5310001670837	88044	AN960-616L	WASHER,FLAT 3/8..... UOC:XBB	4
* 11	PAOZZ	5306002083639	88044	AN6-16A	BOLT,MACHINE 3/8-16 X 1.83..... UOC:XBB	2
* 12	PAOZZ	5365012676769	31272	45613-10	SPACER,SLEEVE..... UOC:XBB	2
* 13	PAOZZ	5310008071475	80205	MS21042L4	NUT,SELF-LOCKING,HE 1/4-28..... UOC:XBB	10
* 14	PAOZZ	2590012600216	31272	45619-11	LINK ASSEMBLY,PLA..... UOC:XBB	2
* 15	PAOZZ	1640012712598	31272	45623-10	WIRE ROPE ASSEMBLY..... UOC:XBB	2
* 16	PAOZZ	5310008071476	80205	MS21042L5	NUT,SELF-LOCKING,HE 5/16-24..... UOC:XBB	6
* 17	PAOZZ	5310001670836	88044	AN960-516L	WASHER,FLAT 5/16..... UOC:XBB	6
* 18	PAOZZ	5315007652190	80205	MS17986C513	PIN,QUICK RELEASE.M..... UOC:XBB	1
* 19	PAOZZ	2590012600217	31272	45616-11	BRACKET ASSEMBLY..... UOC:XBB	1
* 20	PAOZZ	5340012600218	31272	45615-10	BRACKET,MOUNTING..... UOC:XBB	1
* 21	PAOZZ	2590012610523	31272	45608-10	RAIL,PLATFORM..... UOC:XBB	2
* 22	PAOZZ	5305000432682	80205	MS24694-S98	SCREW,MACHINE 1/4-28 X 3/4..... UOC:XBB	4
* 23	PAOZZ	5307012866007	31272	45610-10	STUD,PLAIN..... UOC:XBB	2
* 24	PAOZZ	5340012714281	31272	45618-10	BRACKET,ANGLE..... UOC:XBB	1

(1) ITEM NO	(2) SMR CODE	(3) NSN	(4) CAGEC	(5) PART NUMBER	(6) DESCRIPTION AND USABLE ON CODES(UOC)	(7) QTY
* 25	PAOZZ	5310008071477	80205	MS21042L6	NUT,SELF-LOCKING,HE 3/8-24..... UOC:XBB	2
* 26	PAOZZ	5310001670834	80205	NAS1149F0332P	WASHER,FLAT 13/64..... UOC:XBB	8
* 27	PAOZZ	5310002081918	88044	AN365-1024A	NUT,SELF-LOCKING,HE 3/16-24..... UOC:XBB	8
* 28	PAOZZ	5305010062043	80205	MS24630-28	SCREW,TAPPING 3/16-24 X 5/8..... UOC:XBB	8
* 29	PAOZZ	5340012714282	31272	43977-12	LOOP,STRAP FASTENER..... UOC:XBB	4
* 30	PAOZZ	5340012758567	19207	12340507-9	STRAP,WEBBING..... UOC:XBB	2

END OF FIGURE

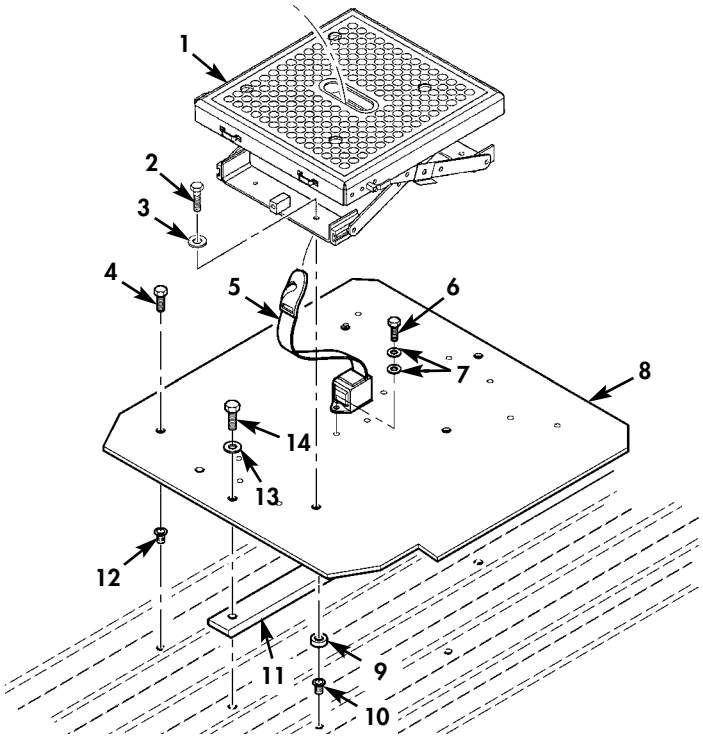

M1114

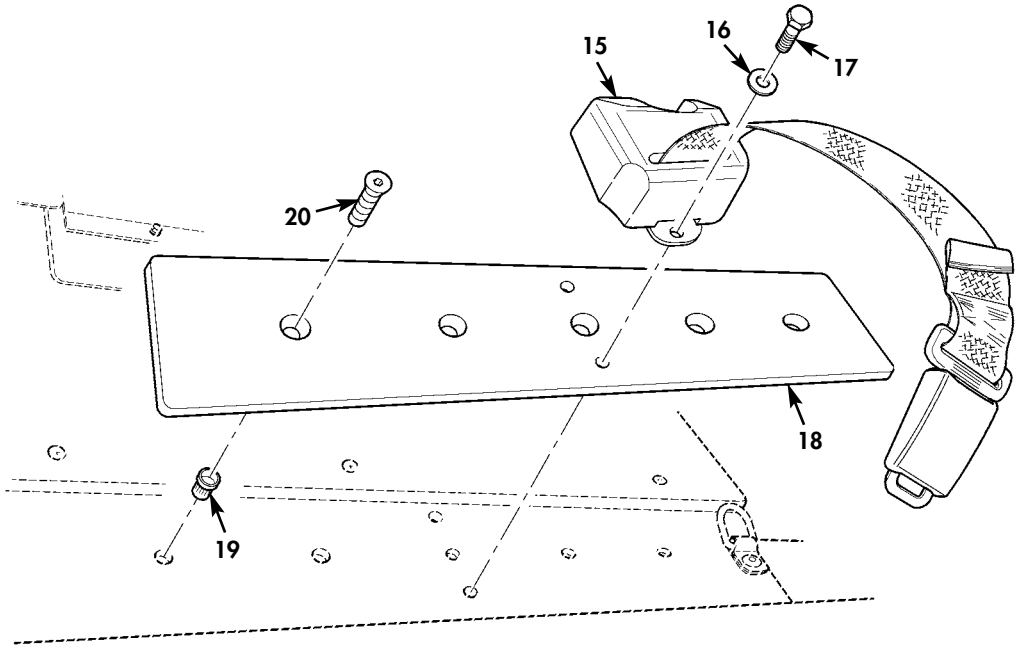

M1151

Figure 201C. Adjustable Gunner's Stand and Gunner's Restraint (Sheet 1 of 2).

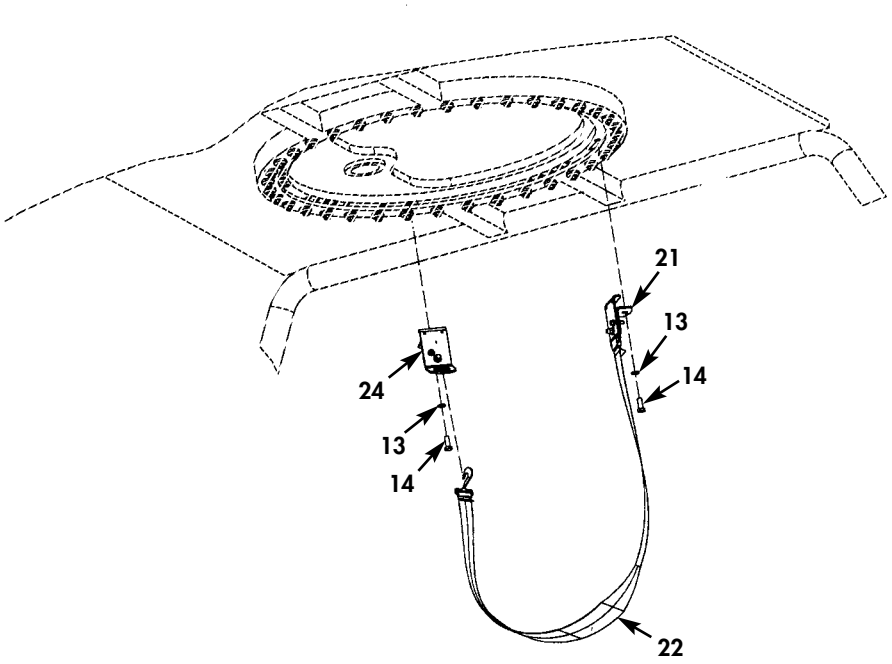

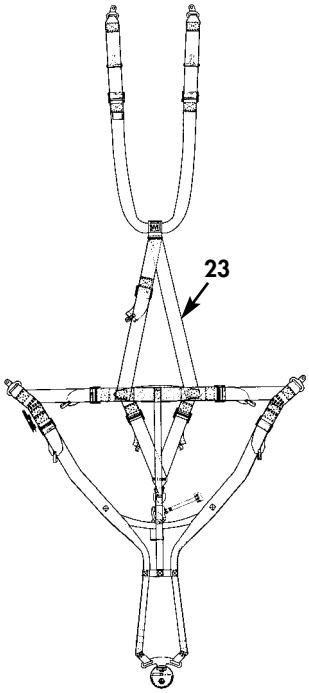

Figure 201C. Adjustable Gunner's Stand and Gunner's Restraint (Sheet 2 of 2).

(1) ITEM NO	(2) SMR CODE	(3) NSN	(4) CAGEC	(5) PART NUMBER	(6) DESCRIPTION AND USABLE ON CODES(UOC)	(7) QTY
					GROUP 1801 BODY,CAB,HOOD,AND HULL ASSEMBLY	
					FIG. 201C ADJUSTABLE GUNNER'S STAND AND GUNNER'S RESTRAINT	
* 1	PAOZZ	2510015207135	6W728	4662276	PLATFORM,GUNNERS..... UOC:XBB	1
* 2	PAOZZ	5306014206635	6W728	4397000-012	BOLT,MACHINE 1/4-20 X 1.50..... UOC:XBB	4
* 3	PAOZZ	5310014357784	6W728	4397005-010	WASHER,FLAT 1/4..... UOC:XBB	4
* 4	PAOZZ	5306014307399	6W728	4397000-006	BOLT,MACHINE 1/4-20 X 3/4..... UOC:XBB	8
* 5	PAOZZ	2540015430747	1EAW9	901-US-07301-1	PARTS KIT,SEAL BELT..... UOC:XBB	1
* 6	PAOZZ	5305007215492	80204	B1821BH038C063N	SCREW,CAP,HEXAGON H 3/8-16 X 5/8.... UOC:XBB	2
* 7	PAOZZ	5310008094061	96906	MS27183-15	WASHER,FLAT 3/8..... UOC:XBB	2
* 8	PAOZZ	2510015207145	6W728	1000323	PLATFORM,GUNNER..... UOC:XBB	1
* 9	PAOZZ	5365015134522	6W728	1000011-000	SPACER,GUNNERS PLA..... UOC:XBB	4
* 10	PAOZZ	5310015251238	6W728	4397050-028	NUT,SELF-LOCKING,BA 1/4-20..... UOC:XBB	4
* 11	PAOZZ	2590015425024	1EAW9	901-US-07301-2	BRACKET,VEHICULAR C..... UOC:XBB	1
* 12	PAOZZ	5310015212135	6W728	4397050-025	NUT,PLAIN,BLIND RIV 1/4-20..... UOC:XBB	8
* 13	PAOZZ	5310000806004	96906	MS27183-14	WASHER,FLAT 3/8..... UOC:XBB	4
* 13	PAOZZ	5310000806004	96906	MS27183-14	WASHER,FLAT 3/8..... UOC:TTA,UU2	2
* 14	PAOZZ	5305002693233	80204	B1821BH038F063N	SCREW,CAP,HEXAGON H 3/8-24 X 5/8.... UOC:XBB	4
* 14	PAOZZ	5305002693233	80204	B1821BH038F063N	SCREW,CAP,HEXAGON H 3/8-24 X 5/8.... UOC:TTA,UU2	2
* 15	PAOZZ		1EAW9	901-US-07301-6	BELT,VEHICULAR,SAFE LOWER RETRACTOR. UOC:TTA,UU2	1
* 16	PAOZZ	5310002090965	80205	MS35338-47	WASHER,LOCK 7/16..... UOC:TTA,UU2	2
* 17	PAOZZ	5305000711786	80204	B1821BH044C100N	SCREW,CAP,HEXAGON H 7/16-14 X 1.00.. UOC:TTA,UU2	2
* 18	PAOZZ	2590015420372	1EAW9	901-US-07301-5	PARTS KIT,BRACKET..... UOC:TTA,UU2	1
* 19	PAOZZ	5325014749732	6W728	4397050-049	INSERT,SCREW,THREAD 3/8-16..... UOC:TTA,UU2	5
* 20	PAOZZ	5305000680510	80204	B1821BH038C100N	SCREW,CAP,HEXAGON H 3/8-16 X 1.00... UOC:TTA,UU2	5
* 21	PAOZZ	2540015426364	1EAW9	901-US-07301-4	BRACKET,SET ANGLE..... UOC:TTA,UU2	1

(1) ITEM NO	(2) SMR CODE	(3) NSN	(4) CAGEC	(5) PART NUMBER	(6) DESCRIPTION AND USABLE ON CODES(UOC)	(7) QTY
* 22	PAOZZ	5340015301744	98313	FDC9902	STRAP,WEBBING..... UOC:TTA,UU2,XBB	1
* 23	PAOZZ	4240015428160	1EAW9	900-US-07301	SAFETY DEVICE,PERSO..... UOC:TTA,UU2,XBB	1
* 24	PAOZZ	2540015426366	1EAW9	901-US-07301-3	BRACKET,SET ANGLE..... UOC:TTA,UU2,XBB	1

END OF FIGURE

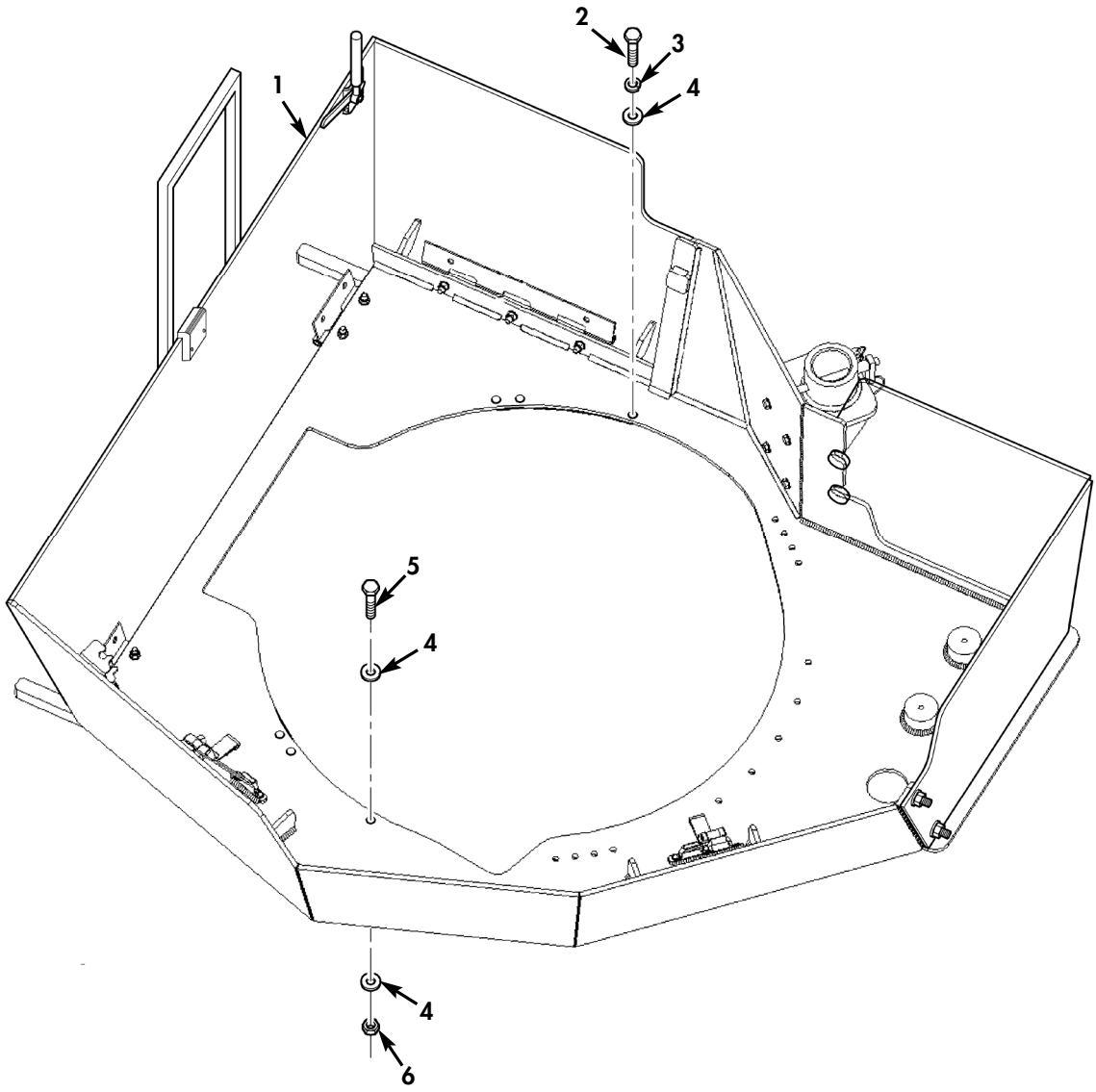

✱ FOR BREAKDOWN SEE
FIGURES 201E THROUGH 201J

Figure 201D. Gunner's Shelter Assembly.

(1) ITEM NO	(2) SMR CODE	(3) NSN	(4) CAGEC	(5) PART NUMBER	(6) DESCRIPTION AND USABLE ON CODES(UOC)	(7) QTY
					GROUP 1801 BODY,CAB,HOOD,AND HULL ASSEMBLY	
					FIG. 201D GUNNER'S SHELTER ASSEMBLY	
* 1	AOOOO		19207	12518475	SHELTER ASSY,GUNNE..... UOC:TT1	1
* 2	PAOZZ	5305002693241	80204	B1821BH038F175N	SCREW,CAP,HEXAGON H 3/8-24 X 1.750 PART OF KIT P/N 57K4907..... UOC:TT1	5
* 3	PAOZZ	5310000045033	80205	MS35338-46	WASHER,LOCK 3/8 PART OF KIT P/N 57K4907..... UOC:TT1	5
* 4	PAOZZ	5310014124013	24617	2436163	WASHER,FLAT 3/8 PART OF KIT P/N 57K4907..... UOC:TT1	7
* 5	PAOZZ	5305002693248	80204	B1821BH038F350N	SCREW,CAP,HEXAGON H 3/8-24 X 3.500 PART OF KIT P/N 57K4907..... UOC:TT1	1
* 6	PAOZZ	5310015529654	96906	M45913/4-6FG8Z	NUT,SELF-LOCKING,HE 3/8-24 PART OF KIT P/N 57K4907..... UOC:TT1	1

END OF FIGURE

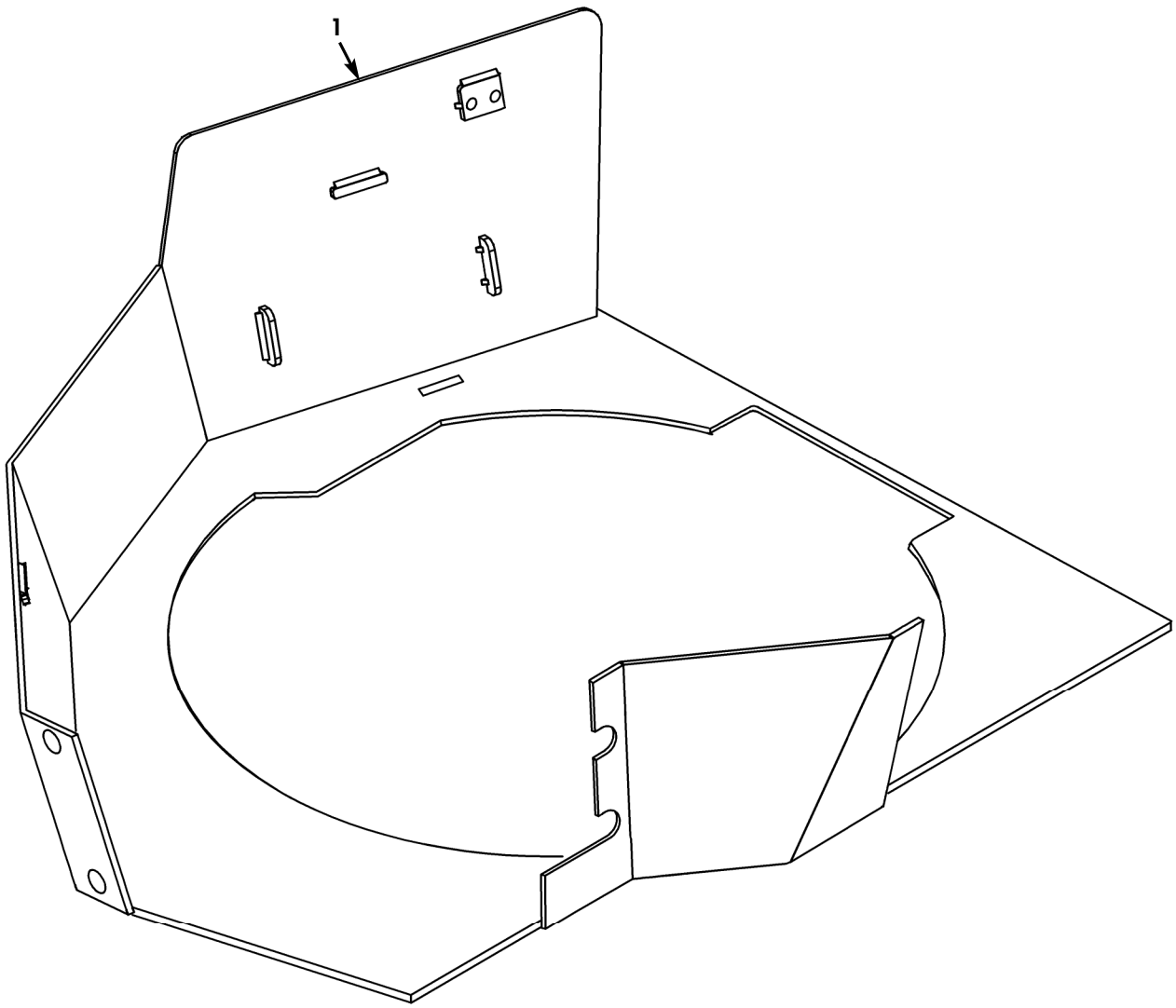

Figure 201E. Gunner's Shelter.

(1) ITEM NO	(2) SMR CODE	(3) NSN	(4) CAGEC	(5) PART NUMBER	(6) DESCRIPTION AND USABLE ON CODES(UOC)	(7) QTY
					GROUP 1801 BODY,CAB,HOOD,AND HULL ASSEMBLY	
					FIG. 201E GUNNER'S SHELTER	
* 1	PAOZZ	2540015741950	19207	12518474	ARMOR SET,SUPPLEMENTAL..... UOC:TT1	1

END OF FIGURE

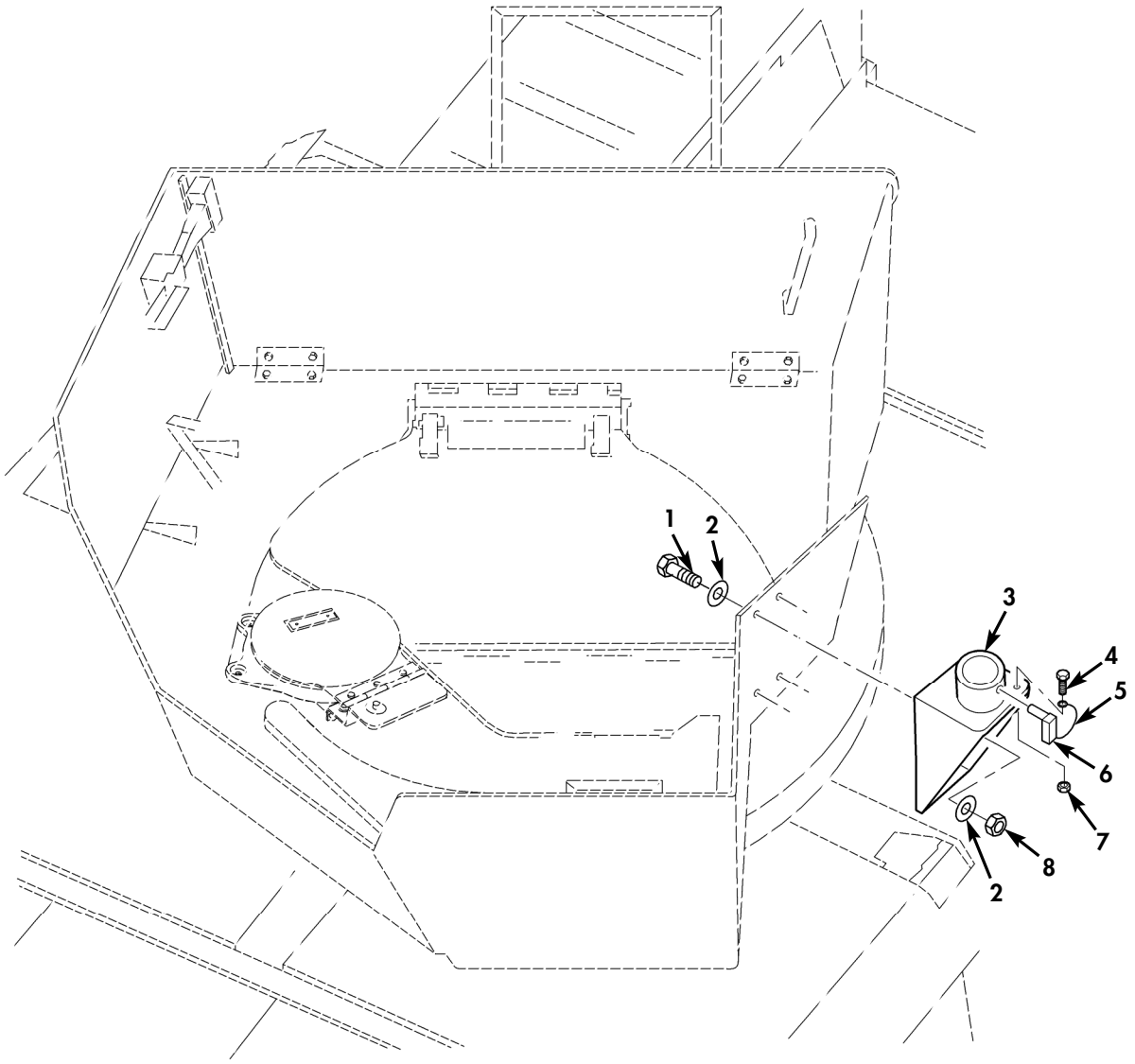

Figure 201F. Weapon Mount.

(1) ITEM NO	(2) SMR CODE	(3) NSN	(4) CAGEC	(5) PART NUMBER	(6) DESCRIPTION AND USABLE ON CODES(UOC)	(7) QTY
					GROUP 1801 BODY,CAB,HOOD,AND HULL ASSEMBLY	
					FIG. 201F WEAPON MOUNT	
* 1	PAOZZ	5305006882111	80204	B1821BH038C138N	SCREW,CAP,HEXAGON H 3/8-16 X 1.375.. UOC:TT1	4
* 2	PAOZZ	5310014124013	24617	2436163	WASHER,FLAT 3/8..... UOC:TT1	8
* 3	PAOZZ		19207	12518495	MOUNT,WEAPON..... UOC:TT1	1
* 4	PAOZZ	5305009846197	80205	MS35206-249	SCREW,MACHINE .164-32 X 1.00..... UOC:TT1	1
* 5	PAOZZ	4010014660849	19207	12342287	WIRE ROPE ASSEMBLY..... UOC:TT1	1
* 6	PAOZZ	5315014950498	80205	MS17986C843	PIN,QUICK RELEASE..... UOC:TT1	1
* 7	PAOZZ	5310015481848	81349	M45913/4-8CG8Z	NUT,SELF-LOCKING,HE 8-32..... UOC:TT1	1
* 8	PAOZZ	5310015420395	96906	M45913/4-6CG8Z	NUT,SELF-LOCKING,HE 3/8-16..... UOC:TT1	4

END OF FIGURE

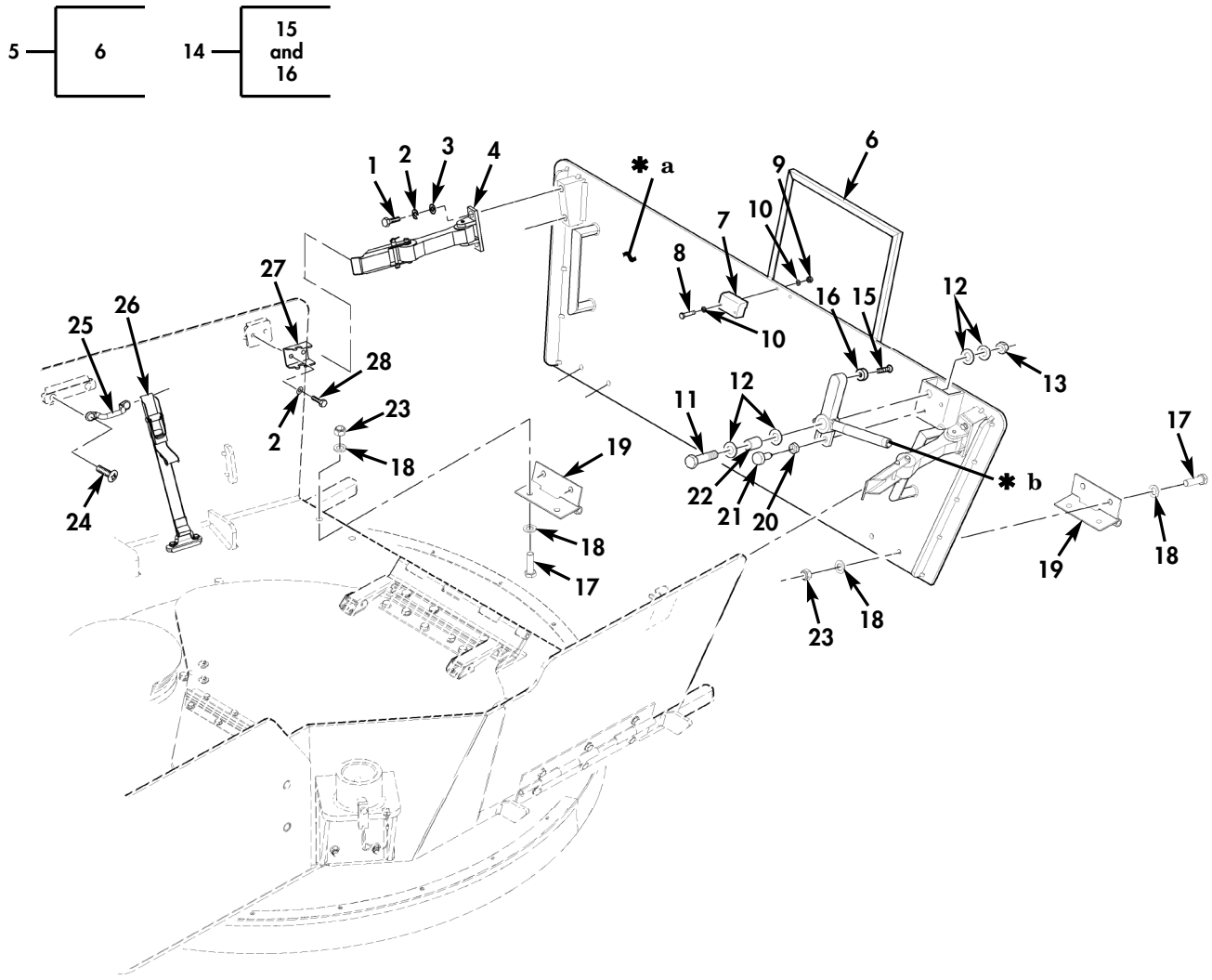

✱ **a** PART OF ITEM 5
✱ **b** PART OF ITEM 14

Figure 201G. Gunner's Shelter Door and Related Components.

(1) ITEM NO	(2) SMR CODE	(3) NSN	(4) CAGEC	(5) PART NUMBER	(6) DESCRIPTION AND USABLE ON CODES(UOC)	(7) QTY
					GROUP 1801 BODY,CAB,HOOD,AND HULL ASSEMBLY	
					FIG. 201G GUNNER'S SHELTER DOOR AND RELATED COMPONENTS	
* 1	PAOZZ	5305000680508	80204	B1821BH025C075N	SCREW,CAP,HEXAGON H 1/4-20 X .750... UOC:TT1	4
* 2	PAOZZ	5310005825965	80205	MS35338-44	WASHER,LOCK 1/4..... UOC:TT1	8
* 3	PAOZZ	5310011023270	24617	2436161	WASHER,FLAT 1/4..... UOC:TT1	4
* 4	PAOZZ	2540011859530	19207	12338909	LATCH,HOOD,VEHICULA..... UOC:TT1	2
* 5	PAOZZ	2510015734712	1WE80	6039705	DOOR,VEHICULAR..... UOC:TT1	1
* 6	XAOZZ		19207	12518459	.SUPPORT,HATCH,GUNNE..... UOC:TT1	1
* 7	PAOZZ	5340015709317	19207	12518593	BLOCK,STOP..... UOC:TT1	1
* 8	PAOZZ	5305000712509	80204	B1821BH025C150N	SCREW,CAP,HEXAGON H 1/4-20 X 1.500.. UOC:TT1	2
* 9	PAOZZ	5310015481269	81349	M45913/4-4CG8Z	NUT,SELF-LOCKING,HE 1/4-20..... UOC:TT1	2
* 10	PAOZZ	5310014650709	19207	12387279-52	WASHER,FLAT 1/4..... UOC:TT1	4
* 11	PAOZZ	5305007247225	80204	B1821BH063C275N	SCREW,CAP,HEXAGON H 5/8-11 X 2.750.. UOC:TT1	1
* 12	PAOZZ	5310011517347	24617	2436167	WASHER,FLAT 5/8..... UOC:TT1	4
* 13	PAOZZ	5310015707523	81349	M45913/4-10CG8Z	NUT,SELF-LOCKING,HE 5/8-11..... UOC:TT1	1
* 14	PAOZZ	2540015732494	19207	12518566	LATCH ASSY,TURRET,H..... UOC:TT1	1
* 15	PAOZZ	5305011993371	19207	12339519	.SCREW,CAP,SOCKET HE 10-32 X 1.75... UOC:TT1	1
* 16	XAOZZ		19207	12518712	.PAD,CLAMP,LATCH..... UOC:TT1	1
* 17	PAOZZ	5305000680511	80204	B1821BH038C125N	SCREW,CAP,HEXAGON H 3/8-16 X 1.250 KIT CONTAINS 4 PART OF KIT P/N 57K4907..... UOC:TT1	8
* 18	PAOZZ	5310014124013	24617	2436163	WASHER,FLAT 3/8 KIT CONTAINS 8 PART OF KIT P/N 57K4907..... UOC:TT1	16
* 19	PAOZZ	2510015734328	19207	12518432	HINGE DOOR,VEHICULA..... UOC:TT1	2
* 20	PAOZZ	5310012729981	96906	MS51471-01	NUT,PLAIN,HEXAGON 1/2-13..... UOC:TT1	1
* 21	PAOZZ	5340014506572	49862	CL-8-HRP-S	PLUNGER,QUICK RELEA..... UOC:TT1	1
* 22	PAOZZ	5365015733381	19207	12518567	BUSHING,SLEEVE..... UOC:TT1	1
* 23	PAOZZ	5310015420395	96906	M45913/4-6CG8Z	NUT,SELF-LOCKING,HE 3/8-16 KIT CONTAINS 4 PART OF KIT P/N 57K4907.. UOC:TT1	8

(1) ITEM NO	(2) SMR CODE	(3) NSN	(4) CAGEC	(5) PART NUMBER	(6) DESCRIPTION AND USABLE ON CODES(UOC)	(7) QTY
* 24	PAOZZ	5305009576272	80205	MS35190-269	SCREW,MACHINE 10-24 x .375..... UOC:TT1	8
* 25	PAOZZ	5340011978673	19207	12338839-4	HANDLE,BOW..... UOC:TT1	4
* 26	PAOZZ	5340012584529	98313	FDC8070-1-4	STRAP,WEBBING RIGHT FRONT AND LEFT SIDE..... UOC:TT1	2
* 27	PAOZZ	5340011899979	34623	5588179	STRIKE,CATCH..... UOC:TT1	2
* 28	PAOZZ	5305000712508	80204	B1821BH025C038N	SCREW,CAP,HEXAGON,1/4-20 x .375..... UOC:TT1	4

END OF FIGURE

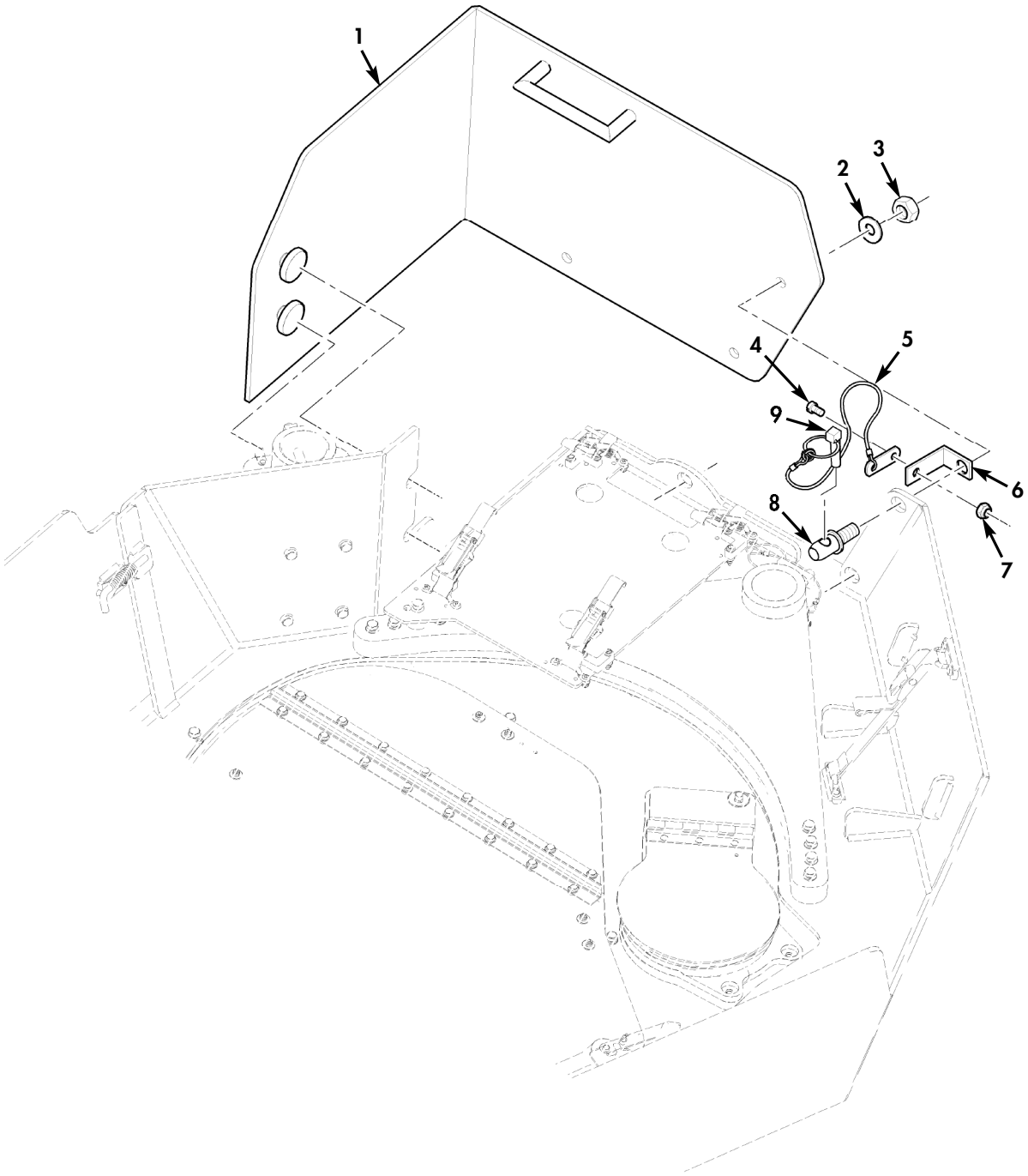

Figure 201H. Gunner's Shelter Cover.

(1) ITEM NO	(2) SMR CODE	(3) NSN	(4) CAGEC	(5) PART NUMBER	(6) DESCRIPTION AND USABLE ON CODES(UOC)	(7) QTY
					GROUP 1801 BODY,CAB,HOOD,AND HULL ASSEMBLY	
					FIG. 201H GUNNER'S SHELTER COVER	
* 1	PAOZZ	2540015733780	19207	12518473	ARMOR,SUPPLEMENTAL..... UOC:TT1	1
* 2	PAOZZ	5310008206653	80205	MS35338-50	WASHER,LOCK 5/8..... UOC:TT1	3
* 3	PAOZZ	5310009318167	96906	MS51967-6	NUT,PLAIN,HEXAGON 5/16 X 18..... UOC:TT1	3
* 4	PAOZZ	5305004703321	96906	MS51849-74	SCREW,MACHINE 10-24 X .500..... UOC:TT1	3
* 5	PAOZZ	4010014660849	19207	12342287	WIRE ROPE ASSEMBLY..... UOC:TT1	3
* 6	PAOZZ	5340015748286	19207	12518725	BRACKET,MOUNTING..... UOC:TT1	3
* 7	PAOZZ		81349	M45913/4-010CG8Z	NUT,SELF-LOCKING,HE 10-24..... UOC:TT1	3
* 8	PFOZZ	5325015734721	1WE80	6039008	STUD,LOCK PIN FASTENER..... UOC:TT1	3
* 9	PAOZZ	5315013986610	39428	90170A221	PIN,COTTER..... UOC:TT1	3

END OF FIGURE

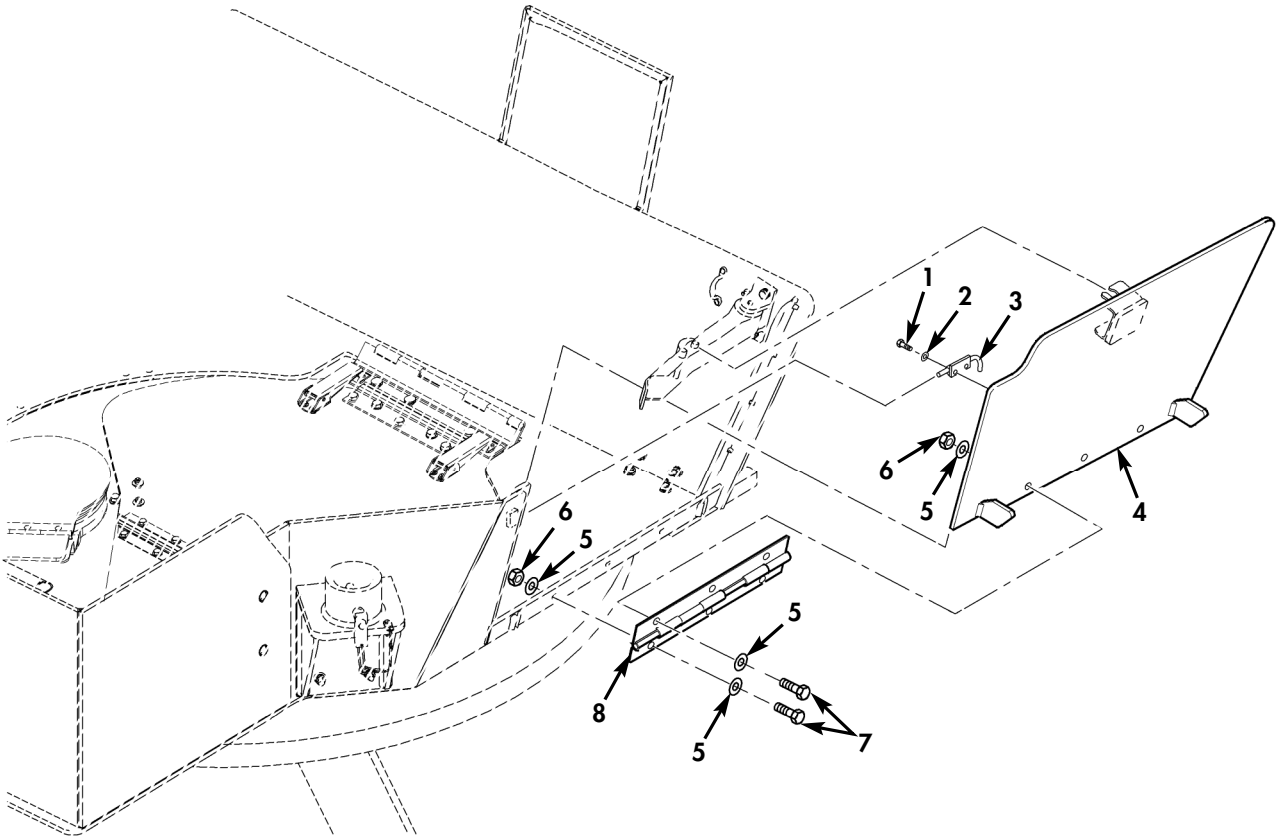

Figure 201I. Gunner's Shelter Door and Hardware.

(1) ITEM NO	(2) SMR CODE	(3) NSN	(4) CAGEC	(5) PART NUMBER	(6) DESCRIPTION AND USABLE ON CODES(UOC)	(7) QTY
					GROUP 1801 BODY,CAB,HOOD,AND HULL ASSEMBLY	
					FIG. 201I GUNNER'S SHELTER DOOR AND HARDWARE	
* 1	PAOZZ	5305015733907	39428	91306A373	SCREW,CAP,SOCKET HEAD 1/4-20 X .375. UOC:TT1	2
* 2	PAOZZ	5310005825965	80205	MS35338-44	WASHER,LOCK 1/4..... UOC:TT1	2
* 3	PFOZZ	5340015726307	59563	HG-9263	BOLT,SLIDE SPRING UOC:TT1	1
* 4	PAOZZ	2510015734728	1WE80	6039006	DOOR,VEHICULAR..... UOC:TT1	1
* 5	PAOZZ	5310014124013	24617	2436163	WASHER,FLAT 3/8 KIT CONTAINS 6 PART OF KIT P/N 57K4907..... UOC:TT1	12
* 6	PAOZZ	5310015420395	96906	M45913/4-6CG8Z	NUT,SELF-LOCKING,HE 3/8-16 KIT CONTAINS 3 PART OF KIT P/N 57K4907.. UOC:TT1	6
* 7	PAOZZ	5305000680511	80204	B1821BH038C125N	SCREW,CAP,HEXAGON H 3/8-16 X 1.250 KIT CONTAINS 3 PART OF KIT P/N 57K4907..... UOC:TT1	6
* 8	PAOZZ	2510015711368	19207	12518464	HINGE DOOR,VEHICULA..... UOC:TT1	1

END OF FIGURE

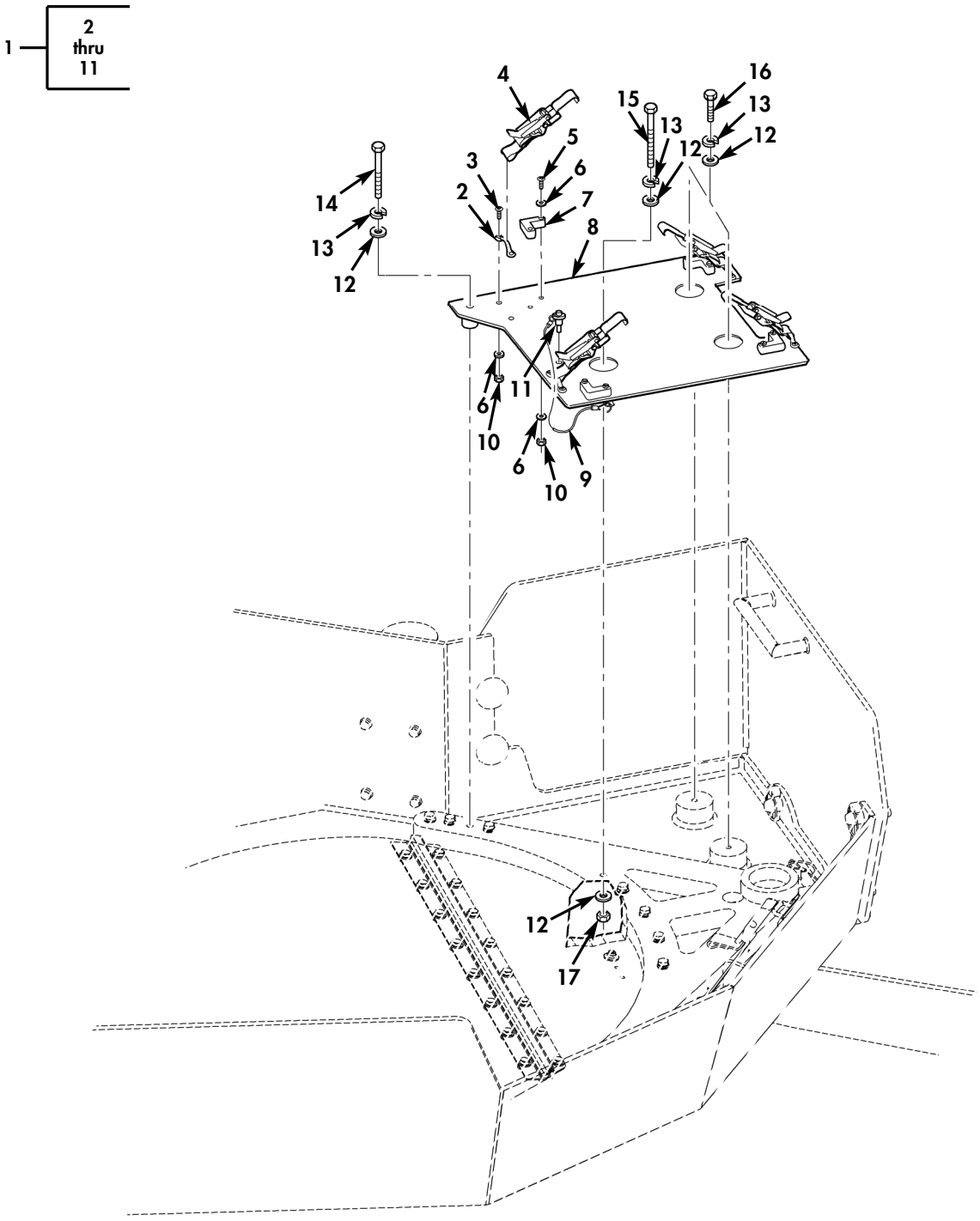

Figure 201J. Fire Tray Assembly.

(1) ITEM NO	(2) SMR CODE	(3) NSN	(4) CAGEC	(5) PART NUMBER	(6) DESCRIPTION AND USABLE ON CODES(UOC)	(7) QTY
					GROUP 1801 BODY,CAB,HOOD,AND HULL ASSEMBLY	
					FIG. 201J FIRE TRAY ASSEMBLY	
* 1	PAOOO		19207	12518485	TRAY ASSEMBLY, FIRE..... UOC:TT1	1
* 2	PAOZZ	5340013145957	19207	12338839-1	.LOOP,STRAP FASTENER..... UOC:TT1	4
* 3	PAOZZ	5305009585471	45152	1507170	.SCREW,MACHINE 10-24 X .750..... UOC:TT1	8
* 4	PAOZZ	5340011982253	31272	45053-11	.STRAP,WEBBING..... UOC:TT1	4
* 5	PAOZZ	5305002406541	96906	MS51849-79	.SCREW,MACHINE 10-24 X 1.250..... UOC:TT1	8
* 6	PAOZZ	5310012349416	96906	MS51412-2	.WASHER,FLAT #10..... UOC:TT1	24
* 7	PFOZZ	5340015737882	19207	12518435	.BRACKET,ANGLE..... UOC:TT1	4
* 8	XAOZZ		19207	12518484	.TRAY,FIRE CONTROL S..... UOC:TT1	1
* 9	PAOZZ	4010015005006	19207	12342287-2	.WIRE ROPE ASSEMBLY..... UOC:TT1	1
* 10	PAOZZ		81349	M45913/4-010CG8Z	.NUT,SELF-LOCKING,HE 10-24..... UOC:TT1	16
* 11	PAOZZ	5315009935276	80205	MS17984C303	.PIN,QUICK RELEASE..... UOC:TT1	1
* 12	PAOZZ	5310014124013	24617	2436163	WASHER,FLAT 3/8 PART OF KIT P/N 57K4907..... UOC:TT1	5
* 13	PAOZZ	5310000045033	80205	MS35338-46	WASHER,LOCK 3/8 PART OF KIT P/N 57K4907..... UOC:TT1	4
* 14	PAOZZ	5305002694528	80204	B1821BH038F425N	SCREW,CAP,HEXAGON H 3/8-24 X 4.250 PART OF KIT P/N 57K4907..... UOC:TT1	1
* 15	PAOZZ	5305015717571	80204	B1821BH038F525N	SCREW,CAP,HEXAGON H 3/8-24 X 5.25 PART OF KIT P/N 57K4907..... UOC:TT1	1
* 16	PAOZZ	5305002693240	80204	B1821BH038F150N	SCREW,CAP,HEXAGON H 3/8-24 X 1.500 PART OF KIT P/N 57K4907..... UOC:TT1	2
* 17	PAOZZ	5310015529654	96906	M45913/4-6FG8Z	NUT,SELF-LOCKING,HE 3/8-24 PART OF KIT P/N 57K4907..... UOC:TT1	1

END OF FIGURE

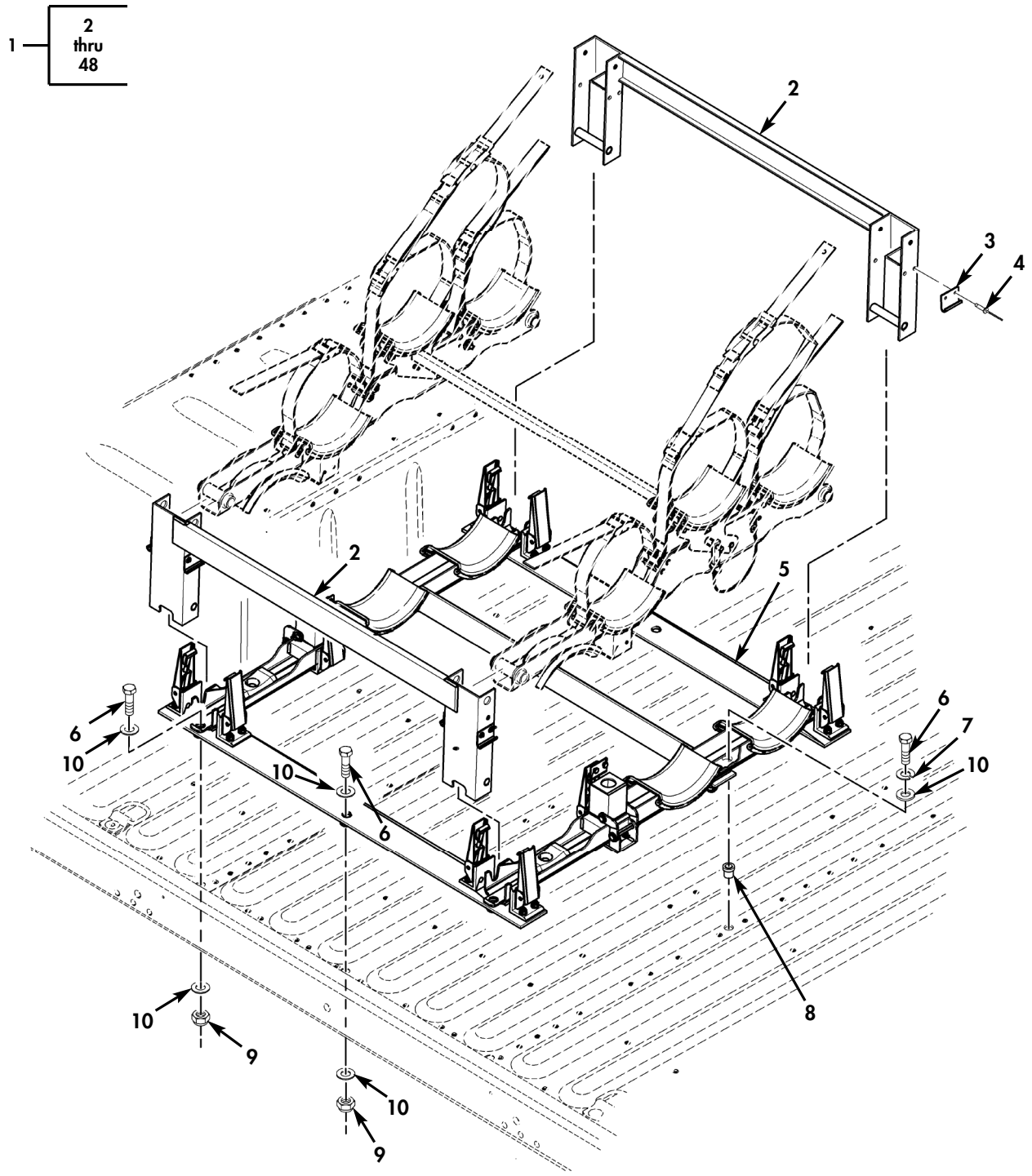

Figure 201K. Missile Rack (Sheet 1 of 3).

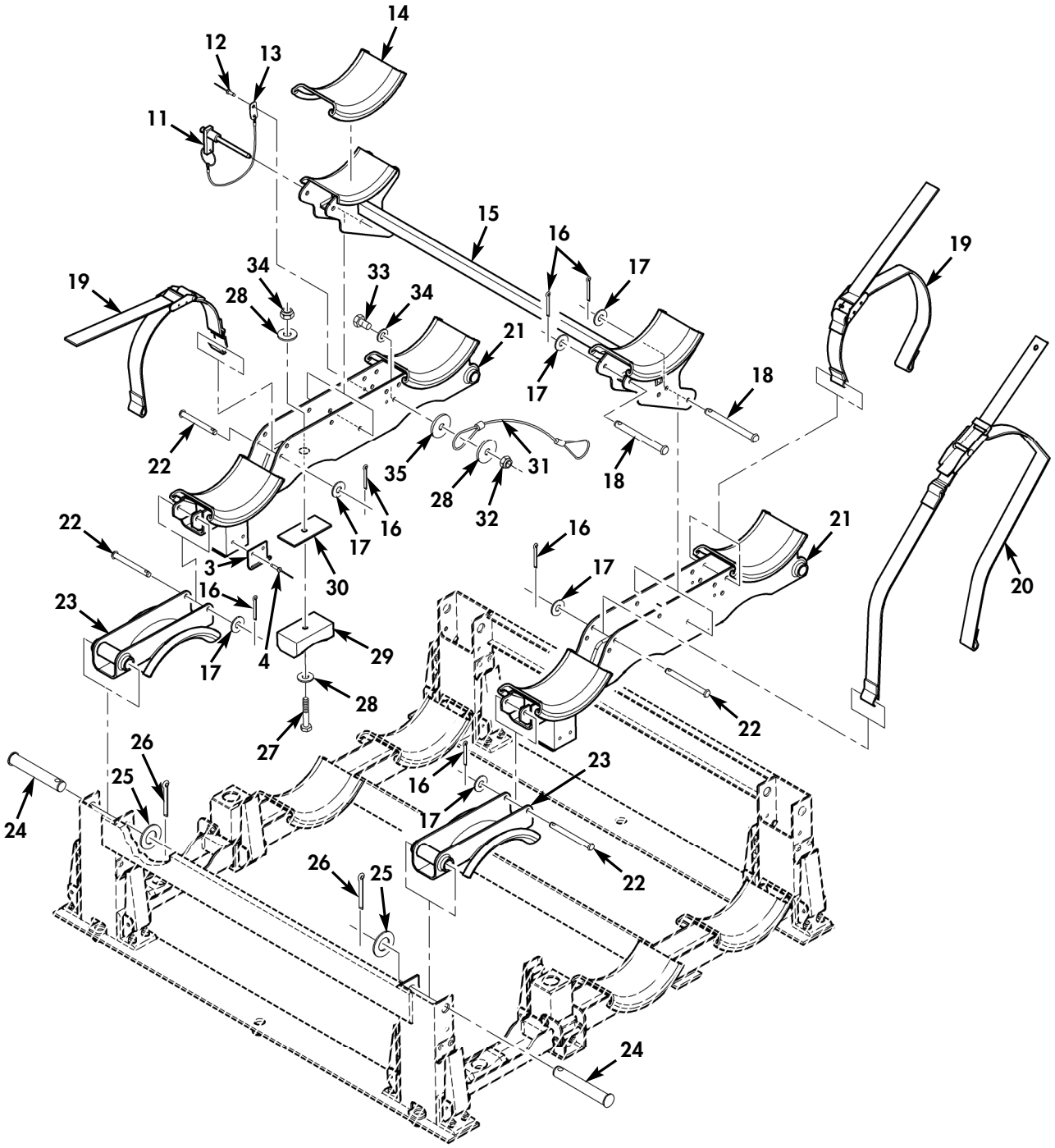

Figure 201K. Missile Rack (Sheet 2 of 3).

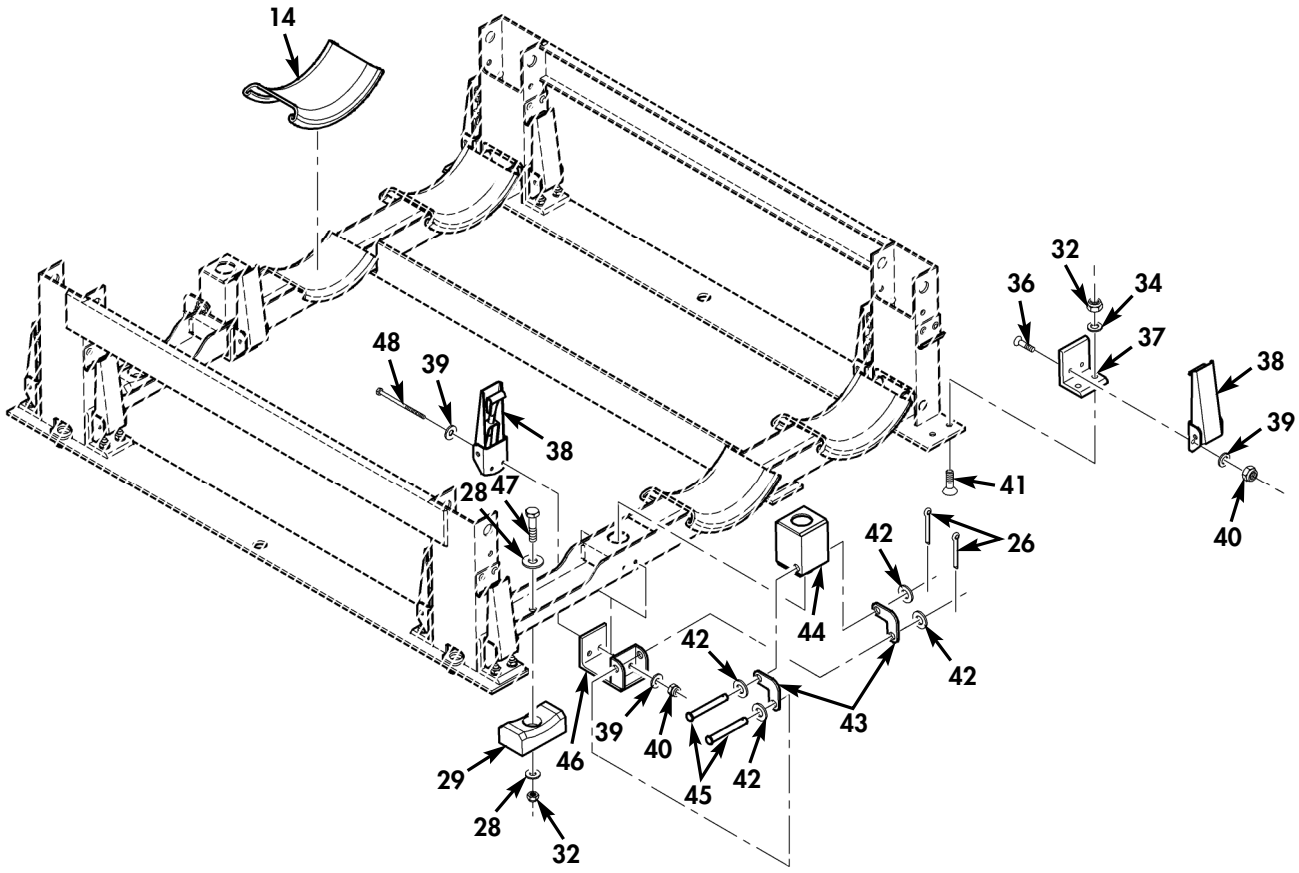

Figure 201K. Missile Rack (Sheet 3 of 3).

(1) ITEM NO	(2) SMR CODE	(3) NSN	(4) CAGEC	(5) PART NUMBER	(6) DESCRIPTION AND USABLE ON CODES(UOC)	(7) QTY
					GROUP 1801 BODY,CAB,HOOD,AND HULL ASSEMBLY	
					FIG. 201K MISSILE RACK	
* 1	PAOOO	1450015732660	19207	12518615	RACK,STORAGE,GUIDED MISSILE..... UOC:TT1	1
* 2	PAOZZ	2510015718433	19207	12518653	.SUPPORT ASSEMBLY UOC:TT1	2
* 3	PAOZZ	5340011900815	71286	18L13-1-1AA	.STRIKE,CATCH..... UOC:TT1	10
* 4	PAOZZ	5320011361782	80205	NAS9301BNS-6-04	.RIVET,BLIND .187 X .250..... UOC:TT1	20
* 5	PAOZZ	2510015744191	19207	12518646	.FRAME,STRUCTURAL,VE..... UOC:TT1	1
* 6	PAOZZ	5305000712071	80204	B1821BH050C200N	.SCREW,CAP,HEXAGON H 1/2-13 X 2.00.. UOC:TT1	9
* 7	PAOZZ	5310005845272	80205	MS35338-48	.WASHER,LOCK 1/2..... UOC:TT1	6
* 8	PAOZZ	5325014090211	78276	ATS2-813	.INSERT,SCREW THREAD 1/2-13..... UOC:TT1	6
* 9	PAOZZ	5310015481848	81349	M45913/4-8CG8Z	.NUT,SELF-LOCKING,HE 1/2-13..... UOC:TT1	3
* 10	PAOZZ	5310011211703	24617	2436165	.WASHER,FLAT 1/2..... UOC:TT1	12
* 11	PAOZZ	5315011455251	80205	MS17986C424	.PIN,QUICK RELEASE..... UOC:TT1	2
* 12	PAOZZ	5320011357319	80205	NAS9301BNS-6-03	.RIVET,BLIND 3/16..... UOC:TT1	2
* 13	PAOZZ	4010015005006	19207	12342287-2	.WIRE ROPE ASSEMBLY..... UOC:TT1	2
* 14	PAOZZ	2590011940309	19207	12339777	.PAD,CUSHIONING..... UOC:TT1	12
* 15	PAOZZ	2590015742934	19207	12518655	.BRACKET,VEHICULAR C..... UOC:TT1	1
* 16	PAOZZ	5315008392325	80205	MS24665-132	.PIN,COTTER 1/16 X .500..... UOC:TT1	18
* 17	PAOZZ	5310011023270	34623	2436161	.WASHER,FLAT 5/8..... UOC:TT1	18
* 18	PAOZZ	5315000817021	96906	MS20392-3C77	.PIN,STRAIGHT,HEADED..... UOC:TT1	6
* 19	PAOZZ	5340012035634	31272	44647-10	.STRAP,WEBBING..... UOC:TT1	6
* 20	PAOZZ	5340012609940	19207	12340529-14	.STRAP,WEBBING..... UOC:TT1	2
* 21	PAOZZ	2510015736414	19207	12518637	.RAIL ASSEMBLY UPPER..... UOC:TT1	2
* 22	PAOZZ	5315008409653	96906	MS20392-3C67	.PIN,STRAIGHT,HEADED 1/4 X 2.30..... UOC:TT1	12
* 23	PAOZZ	2590015738363	19207	12518641	.BRACKET,VEHICULAR C REAR UPPER..... UOC:TT1	2
* 24	PAOZZ	5315014448970	96906	MS20392-8C101	.PIN,STRAIGHT,HEADED..... UOC:TT1	4

(1) ITEM NO	(2) SMR CODE	(3) NSN	(4) CAGEC	(5) PART NUMBER	(6) DESCRIPTION AND USABLE ON CODES(UOC)	(7) QTY
* 25	PAOZZ		05047	AEW26X56N062BD6A 81	.WASHER,FLAT 9/16..... UOC:TT1	4
* 26	PAOZZ	5315008423044	80205	MS24665-283	.PIN,COTTER .0937 x .750..... UOC:TT1	8
* 27	PAOZZ	5305000712509	80204	B1821BH025C150N	.SCREW,CAP,HEXAGON H 1/4-20 X 1.500. UOC:TT1	4
* 28	PAOZZ	5310014200054	19207	12387278-11	.WASHER,FLAT 1/4..... UOC:TT1	16
* 29	PAOZZ	5340011955397	19207	12339765	.BUMPER..... UOC:TT1	6
* 30	PAOZZ	5365011962699	19207	12339767	.SPACER,PLATE..... UOC:TT1	1
* 31	PAOZZ	4010015718807	19207	12518660	.WIRE ROPE ASSEMBLY..... UOC:TT1	2
* 32	PAOZZ	5310015481269	81349	M45913/4-4CG8Z	.NUT,SELF-LOCKING,HE 1/4-20..... UOC:TT1	26
* 33	PAOZZ	5305000712505	80204	B1821BH025C088N	.SCREW,CAP,HEXAGON H 1/4-20 X .875.. UOC:TT1	4
* 34	PAOZZ	5310011023270	24617	2436161	.WASHER,FLAT 1/4..... UOC:TT1	20
* 35	PAOZZ	5310011173446	21877	1851863-4	.WASHER,FLAT..... UOC:TT1	4
* 36	PAOZZ	5305009585471	45152	1507170	.SCREW,MACHINE 10-24 x .750..... UOC:TT1	16
* 37	PFOZZ	5340015718529	19207	12518630	.BRACKET,ANGLE..... UOC:TT1	8
* 38	PAOZZ	5340012065040	19207	12340628	.CATCH,CLAMPING..... UOC:TT1	10
* 39	PAOZZ	5310013899681	19207	12387279-42	.WASHER,FLAT #10..... UOC:TT1	24
* 40	PAOZZ		81349	M45913/1-010CG5Z	.NUT,SELF-LOCKING,HE 10-24..... UOC:TT1	20
* 41	PAOZZ	5305009543937	80205	MS35190-290	.SCREW,MACHINE 1/4-20 X .875..... UOC:TT1	16
* 42	PAOZZ	5310011191024	24617	2436162	.WASHER,FLAT 5/16..... UOC:TT1	8
* 43	PAOZZ	5340015739422	19207	12518629	.BRACKET,MOUNTING..... UOC:TT1	4
* 44	PAOZZ		19207	12518644	.SUPPORT ASSY, PILLA..... UOC:TT1	2
* 45	PAOZZ	5315009837402	96906	MS20392-4C69	.PIN,STRAIGHT,HEADED..... UOC:TT1	4
* 46	PAOZZ	5340015739475	19207	12518645	.BRACKET,MOUNTING..... UOC:TT1	2
* 47	PAOZZ	5305002253842	80204	B1821BH025C113N	.SCREW,CAP,HEXAGON H 1/4-20 X 1.125. UOC:TT1	2
* 48	PAOZZ	5305009847365	96906	MS35206-275	.SCREW,MACHINE 10-24 x 3.00..... UOC:TT1	4

END OF FIGURE

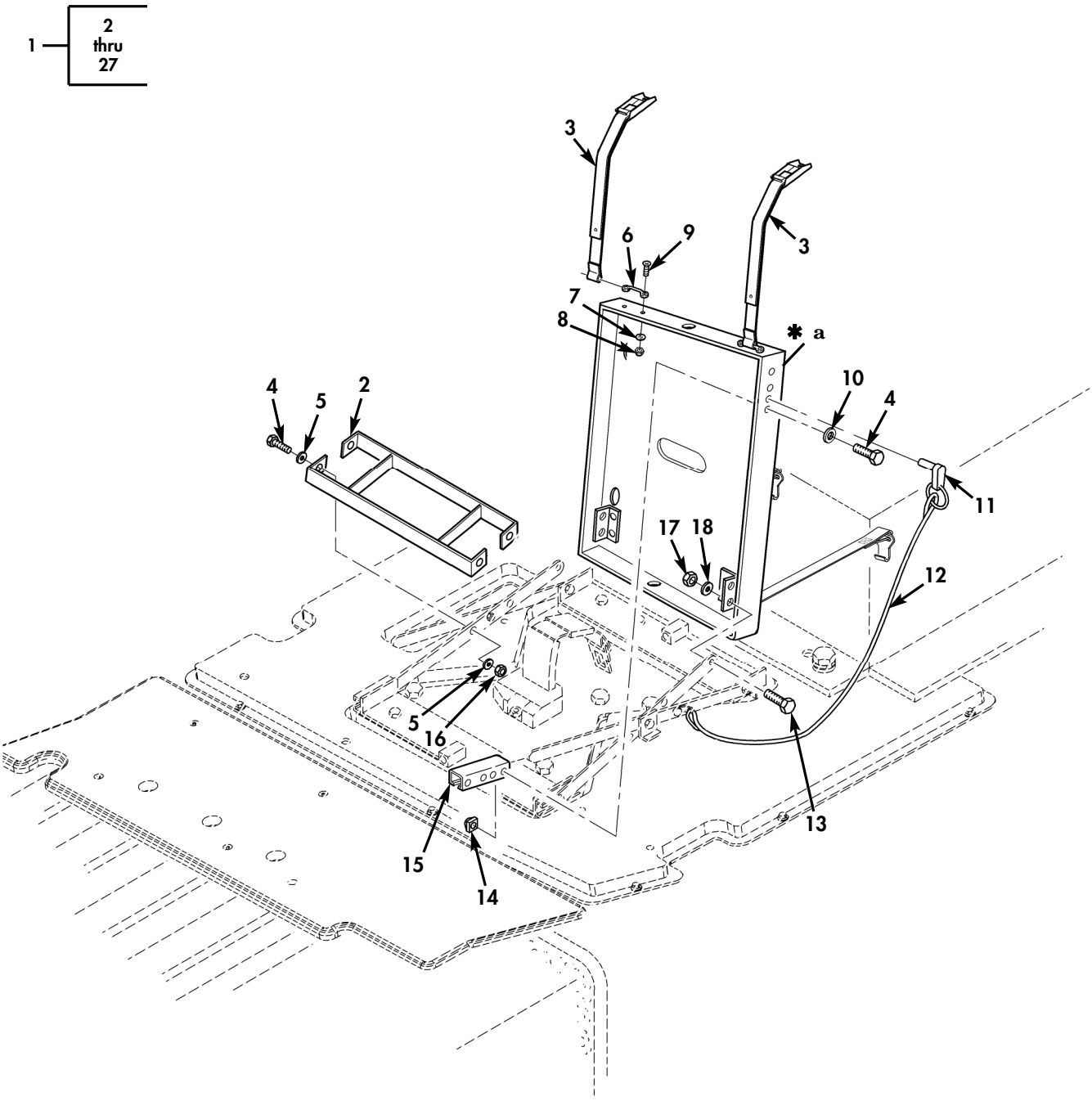

✱ **a** PART OF ITEM 1

Figure 201L. Gunner's Platform (Sheet 1 of 3).

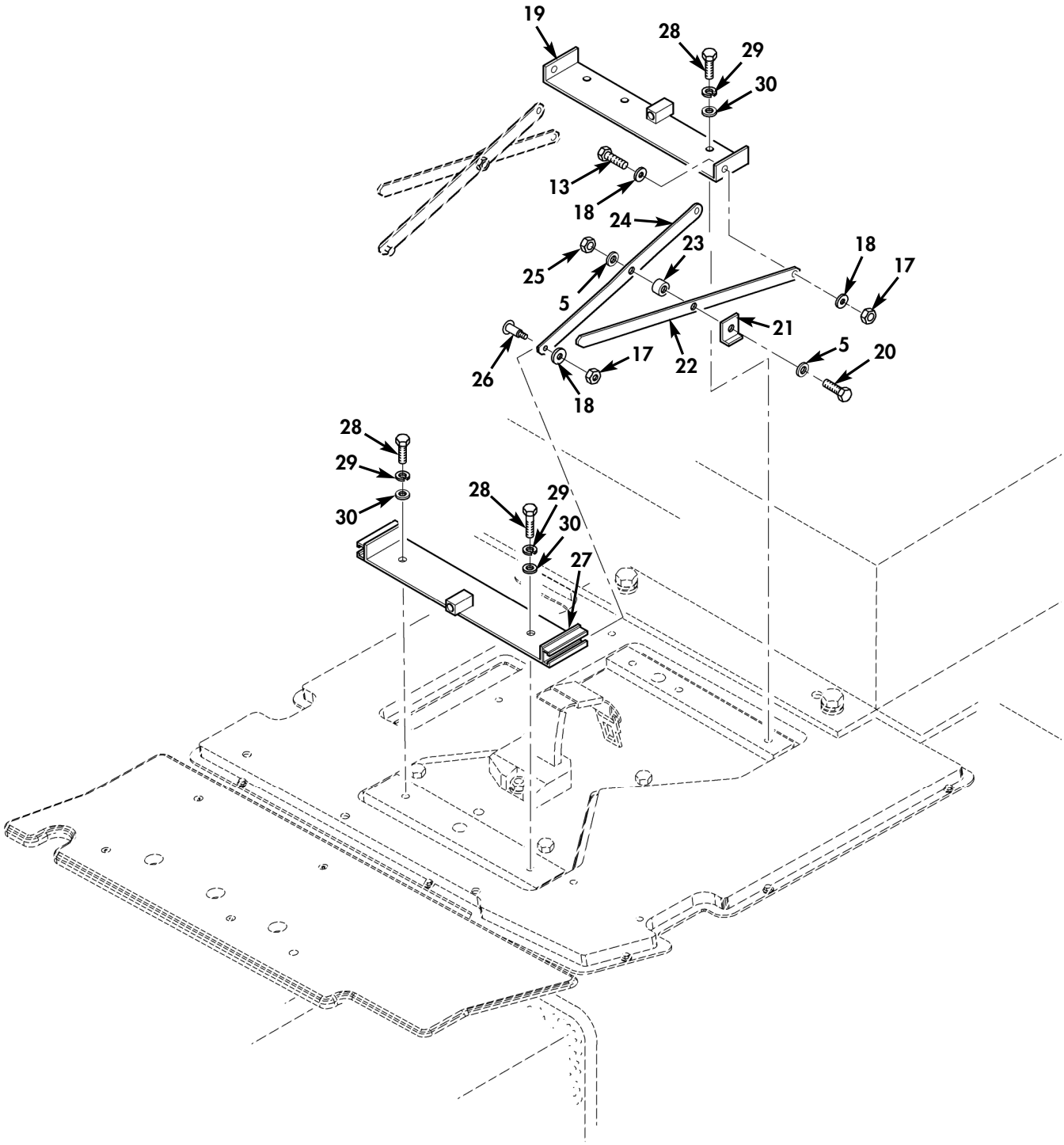

Figure 201L. Gunner's Platform (Sheet 2 of 3).

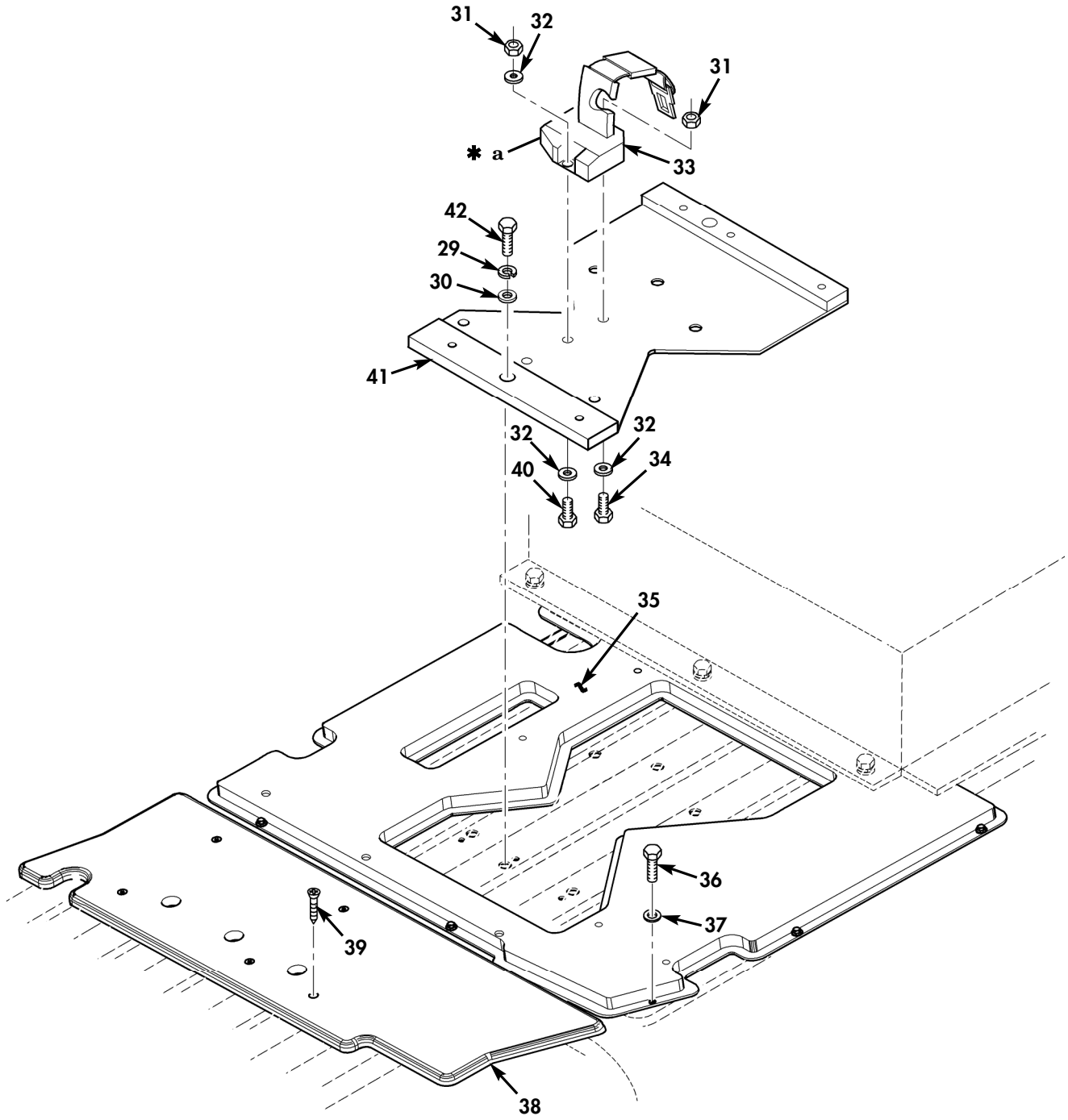

✱ **a** FOR GUNNER'S RETRAINT AND SEAT
SEE FIGURE 201C, ITEMS 22 AND 23

Figure 201L. Gunner's Platform (Sheet 3 of 3).

(1) ITEM NO	(2) SMR CODE	(3) NSN	(4) CAGEC	(5) PART NUMBER	(6) DESCRIPTION AND USABLE ON CODES(UOC)	(7) QTY
					GROUP 1801 BODY,CAB,HOOD,AND HULL ASSEMBLY	
					FIG. 201L GUNNER'S PLATFORM	
* 1	PAOOO		19207	12518597	PLATFORM ASSY,GUNNE..... UOC:TT1	1
* 2	XAOZZ		19207	12518602	.BRACKET,GUNNERS PLA..... UOC:TT1	1
* 3	PAOZZ	5340012609940	19207	12340529-14	.STRAP,WEBBING..... UOC:TT1	2
* 4	PAOZZ	5305002678953	80204	B1821BH025F063N	.SCREW,CAP,HEXAGON H 1/4-28 X .625.. UOC:TT1	8
* 5	PAOZZ	5310001670837	88044	AN960-616L	.WASHER,FLAT 3/8..... UOC:TT1	4
* 6	PAOZZ	5340013145957	19207	12338839-1	.LOOP,STRAP FASTENER..... UOC:TT1	4
* 7	PAOZZ	5310000145850	96906	MS27183-42	.WASHER,FLAT #10..... UOC:TT1	8
* 8	PAOZZ	5310012699245	7X677	190254	.NUT,SELF-LOCKING,HE 10-24..... UOC:TT1	8
* 9	PAOZZ	5305011981621	7X677	156971	.SCREW,MACHINE 10-24 X .750..... UOC:TT1	8
* 10	PAOZZ	5310001670835	14153	CIPRD-AN960-416L	.WASHER,FLAT 1/4..... UOC:TT1	14
* 11	PAOZZ	5315007652190	80205	MS17986C513	.PIN,QUICK RELEASE..... UOC:TT1	2
* 12	PAOZZ	4010012712598	31272	45623-10	.WIRE ROPE ASSEMBLY..... UOC:TT1	2
* 13	PAOZZ	5306012696254	31272	45621-10	.BOLT,SHOULDER 5/16-24 X .750..... UOC:TT1	4
* 14	PAOZZ	5310012984686	31272	45611-10	.NUT BLANK 1/4-28..... UOC:TT1	4
* 15	PAOZZ	2590012624981	31272	45602-10	.GUIDE,PLATFORM..... UOC:TT1	1
* 16	PAOZZ	5310008071475	80205	MS21042L4	.NUT,SELF-LOCKING,EX 1/4-28..... UOC:TT1	10
* 17	PAOZZ	5310008071476	80205	MS21042L5	.NUT,SELF-LOCKING,EX 5/16-24..... UOC:TT1	6
* 18	PAOZZ	5310001670836	88044	AN960-516L	.WASHER,FLAT 5/16..... UOC:TT1	6
* 19	PAOZZ	2590012600217	31272	45616-11	.BRACKET ASSEMBLY,RE..... UOC:TT1	1
* 20	PAOZZ	5306002083639	88044	AN6-16A	.BOLT,MACHINE 3/8-24 X 1.83..... UOC:TT1	2
* 21	PAOZZ	5342012600215	31272	45721-10	.LATCH,PLATFORM,GUNN..... UOC:TT1	2
* 22	PAOZZ	2590012600216	31272	45619-11	.LINK ASSEMBLY,PLATF..... UOC:TT1	2
* 23	PAOZZ	5365012676769	31272	45613-10	.SPACER,SLEEVE..... UOC:TT1	2
* 24	PAOZZ	3040012649554	31272	45617-13	.CONNECTING LINK,RIG..... UOC:TT1	2

(1) ITEM NO	(2) SMR CODE	(3) NSN	(4) CAGEC	(5) PART NUMBER	(6) DESCRIPTION AND USABLE ON CODES(UOC)	(7) QTY
* 25	PAOZZ	5310008071477	80205	MS21042L6	.NUT,SELF-LOCKING,EX 3/8-24..... UOC:TT1	2
* 26	PAOZZ	5307012866007	31272	45610-10	.STUD,PLAIN..... UOC:TT1	2
* 27	PAOZZ	5340012600218	31272	45615-10	.BRACKET,MOUNTING..... UOC:TT1	1
* 28	PAOZZ	5306002264827	80204	B1821BH031C100N	BOLT,MACHINE 5/16-18 X 1.00..... UOC:TT1	5
* 29	PAOZZ	5310004079566	80205	MS35338-45	WASHER,LOCK 5/16..... UOC:TT1	11
* 30	PAOZZ	5310011191024	24617	2436162	WASHER,FLAT 5/16..... UOC:TT1	11
* 31	PAOZZ	5310015655271	81349	M45913/4-7CG8Z	NUT,SELF-LOCKING,HE 7/16-14..... UOC:TT1	2
* 32	PAOZZ	5310008094085	96906	MS27183-16	WASHER,FLAT 7/16..... UOC:TT1	3
* 33	PAOZZ	2540015739444	1EAW9	6501737	GUIDE ROLLER,SAFETY BELT..... UOC:TT1	1
* 34	PAOZZ	5305000711788	80204	B1821BH044C125N	SCREW,CAP,HEXAGON H 7/16-14 X 1.25.. UOC:TT1	1
* 35	PAOZZ	2540015708995	19207	12518392	INSULATION,PLATFORM..... UOC:TT1	1
* 36	PAOZZ	5305010065736	19207	12342499-3	SCREW,TAPPING 10-32 X .750..... UOC:TT1	9
* 37	PAOZZ	5310013899681	19207	12387279-42	WASHER,FLAT #10..... UOC:TT1	9
* 38	PAOZZ	5530015739469	19207	12528651	PLYWOOD,CONSTRUCTION..... UOC:TT1	1
* 39	PAOZZ	5305015739435	19207	12506698	SCREW,MACHINE .190-16 X 1.38..... UOC:TT1	5
* 40	PAOZZ	5305000712057	80204	B1821BH044C200N	SCREW,CAP,HEXAGON H 7/16-14 X 2.00.. UOC:TT1	1
* 41	PAOZZ	5365015715850	19207	12518601	PLATE ASSEMBLY,SPAC..... UOC:TT1	1
* 42	PAOZZ	5306002264834	80204	B1821BH031C225N	BOLT,MACHINE 5/16-18 X 2.25..... UOC:TT1	6

END OF FIGURE

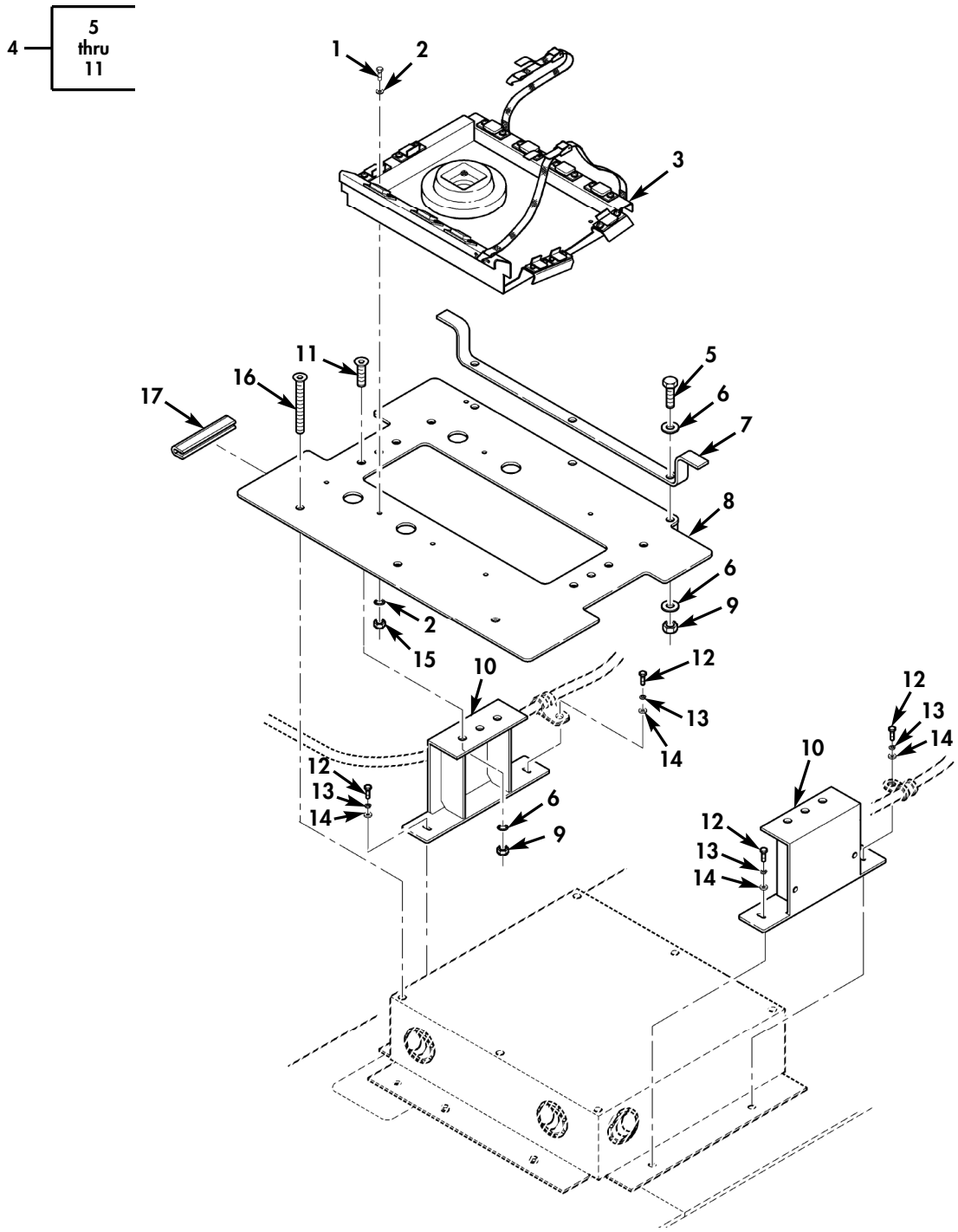

Figure 201M. Stowage Assembly, Evaporator Tow.

(1) ITEM NO	(2) SMR CODE	(3) NSN	(4) CAGEC	(5) PART NUMBER	(6) DESCRIPTION AND USABLE ON CODES(UOC)	(7) QTY
					GROUP 1801 BODY,CAB,HOOD,AND HULL ASSEMBLY	
					FIG. 201M STOWAGE ASSEMBLY,EVAPORATOR TOW	
* 1	PAOZZ	5305000680510	80204	B1821BH038C100N	SCREW,CAP,HEXAGON H 3/8-16 X 1.00... UOC:TT1	4
* 2	PAOZZ	5310014124013	24617	2436163	WASHER,FLAT 3/8..... UOC:TT1	8
* 3	PAOZZ	5340015718473	96214	3238482-2	BRACKET,MOUNTING..... UOC:TT1	1
* 4	AOOOO		19207	12518592	STOWAGE ASSY,EVAPOR..... UOC:TT1	1
* 5	PAOZZ	5305000712505	80204	B1821BH025C088N	.SCREW,CAP,HEXAGON H 1/4-20 X .875.. UOC:TT1	3
* 6	PAOZZ	5310011023270	24617	2436161	.WASHER,FLAT 1/4..... UOC:TT1	12
* 7	PAOZZ	5340015716219	19207	12518575	.BRACKET,CABLE..... UOC:TT1	1
* 8	PFOZZ	2590015709001	19207	12518591	.PLATE ASSY,STOWAGE UOC:TT1	1
* 9	PAOZZ	5310015481269	81349	M45913/4-4CG8Z	.NUT,SELF-LOCKING,HE 1/4-20..... UOC:TT1	9
* 10	PFOZZ		19207	12518580	.BRACKET ASSEMBLY UOC:TT1	2
* 11	PAOZZ	5305009683513	80205	MS24667-32	.SCREW,CAP,SOCKET HE 1/4-20 X 1.00.. UOC:TT1	6
* 12	PAOZZ	5305000712510	80204	B1821BH025C175N	SCREW,CAP,HEXAGON H 1/4-20 X 1.75... UOC:TT1	4
* 13	PAOZZ	5310005825965	80205	MS35338-44	WASHER,LOCK 1/4..... UOC:TT1	4
* 14	PAOZZ	5310011023270	24617	2436161	WASHER,FLAT 1/4..... UOC:TT1	4
* 15	PAOZZ	5310015420395	96906	M45913/4-6CG8Z	NUT,SELF-LOCKING,HE 3/8-16..... UOC:TT1	4
* 16	PAOZZ	5305009683514	80205	MS24667-35	SCREW,CAP,SOCKET HE 1/4-20 X 2.00... UOC:TT1	5
* 17	PAOZZ	2590015657676	21480	12339902-12	PAD,CUSHIONING..... UOC:TT1	1

END OF FIGURE

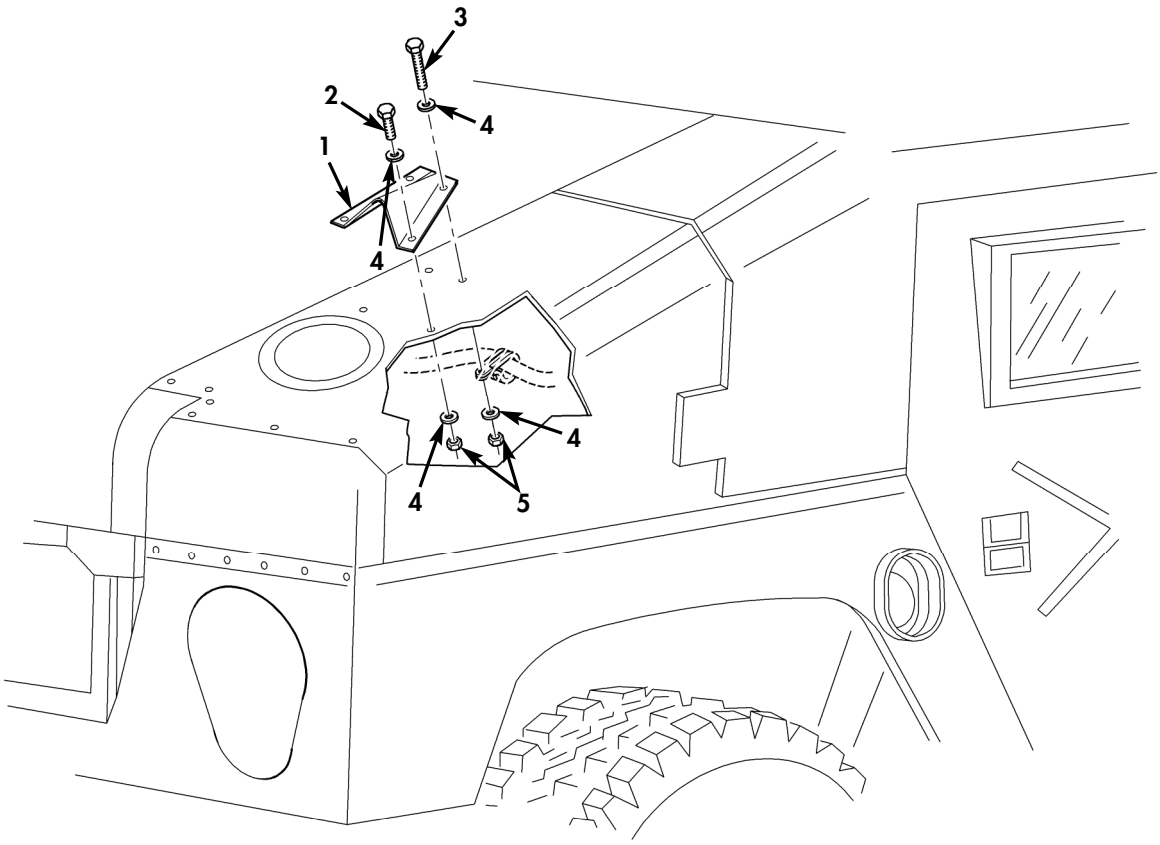

Figure 201N. Antenna Blast Shield.

(1) ITEM NO	(2) SMR CODE	(3) NSN	(4) CAGEC	(5) PART NUMBER	(6) DESCRIPTION AND USABLE ON CODES(UOC)	(7) QTY
					GROUP 1801 BODY,CAB,HOOD,AND HULL ASSEMBLY	
					FIG. 201N ANTENNA BLAST SHIELD	
* 1	PAOZZ	2590011887394	19207	12339642	SHIELD,BLAST,VEHICU..... UOC:TT1	1
* 2	PAOZZ	5305000712505	80204	B1821BH025C088N	SCREW,CAP,HEXAGON H 1/4-20 X .875... UOC:TT1	3
* 3	PAOZZ	5305002253843	80204	B1821BH025C100N	SCREW,CAP,HEXAGON H 1/4-20 X 1.00... UOC:TT1	1
* 4	PAOZZ	5310011023270	24617	2436161	WASHER,FLAT 1/4..... UOC:TT1	8
* 5	PAOZZ	5310015481269	81349	M45913/4-4CG8Z	NUT,SELF-LOCKING,HE 1/4-20..... UOC:TT1	4

END OF FIGURE

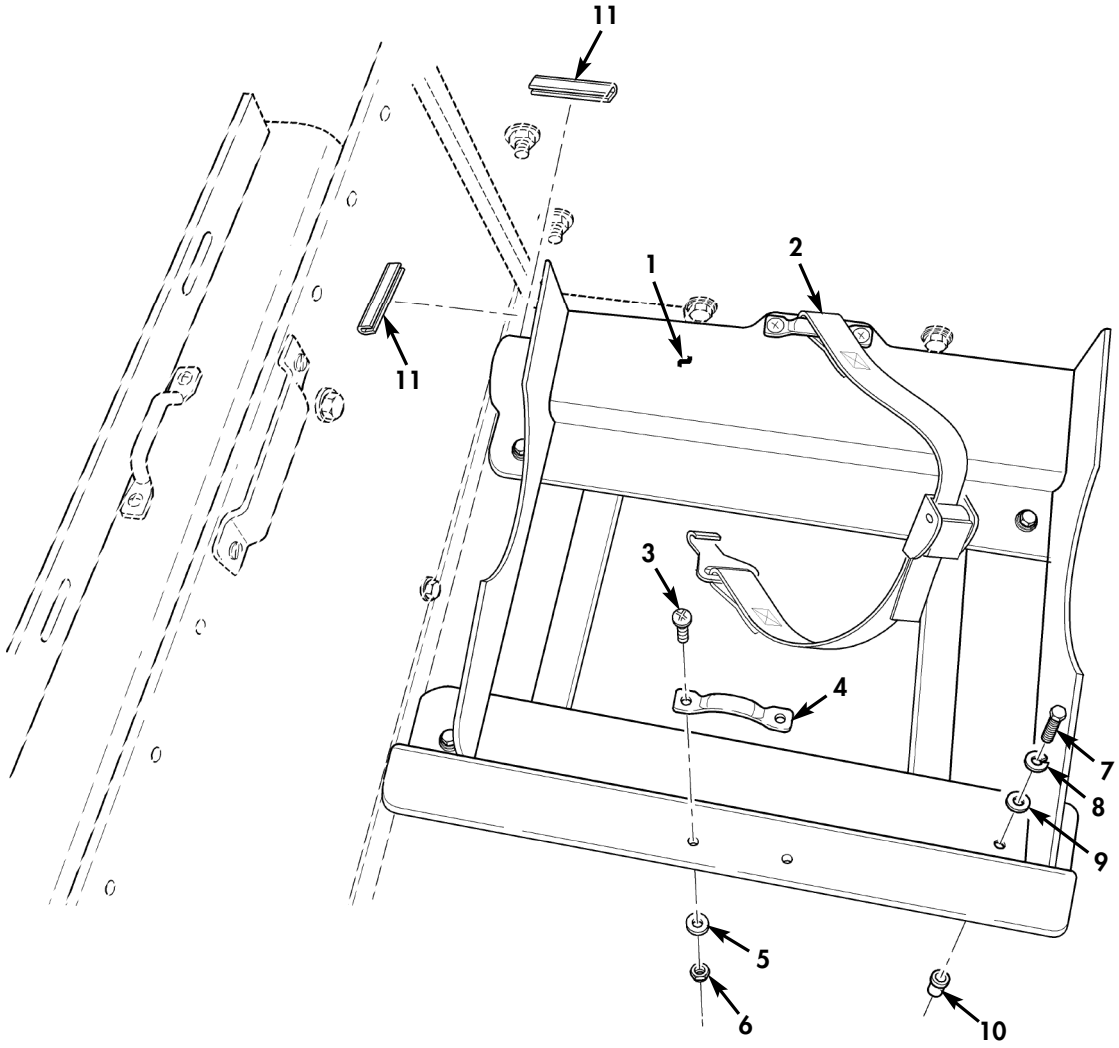

Figure 201O. Battery Box Bracket Assembly.

(1) ITEM NO	(2) SMR CODE	(3) NSN	(4) CAGEC	(5) PART NUMBER	(6) DESCRIPTION AND USABLE ON CODES(UOC)	(7) QTY
					GROUP 1801 BODY,CAB,HOOD,AND HULL ASSEMBLY	
					FIG. 201O BATTERY BOX BRACKET ASSEMBLY	
* 1	PFOZZ	2590015718884	19207	12518609	BRACKET,ASSEMBLY..... UOC:TT1	1
* 2	PAOZZ	5340015708985	31272	44648-12	STRAP,WEBBING..... UOC:TT1	1
* 3	PAOZZ	5305009585471	45152	1507170	SCREW,MACHINE 10-24 X .625..... UOC:TT1	4
* 4	PAOZZ	5340013145957	19207	12338839-1	LOOP,STRAP FASTENER..... UOC:TT1	2
* 5	PAOZZ	5310000145850	96906	MS27183-42	WASHER,FLAT #10..... UOC:TT1	4
* 6	PAOZZ	5310015013090	81349	M45913/3-010CG8Z	NUT,SELF-LOCKING,H 10-24..... UOC:TT1	4
* 7	PAOZZ	5306002264829	80204	B1821BH031C125N	BOLT,MACHINE 5/16-18 X 1.25..... UOC:TT1	4
* 8	PAOZZ	5310004079566	80205	MS35338-45	WASHER,LOCK 1/4..... UOC:TT1	4
* 9	PAOZZ	5310011191024	24617	2436162	WASHER,FLAT 1/4..... UOC:TT1	4
* 10	PAOZZ	5310014133276	78276	ALS4-518-150	NUT,PLAIN,BLIND RIV..... UOC:TT1	4
* 11	MOOZZ		19207	12339902-14	PROTECTOR,EDGE MAKE FROM PROTECTOR,EDGE,P/N 5597890,1 INCH LONG..... UOC:TT1	2

END OF FIGURE

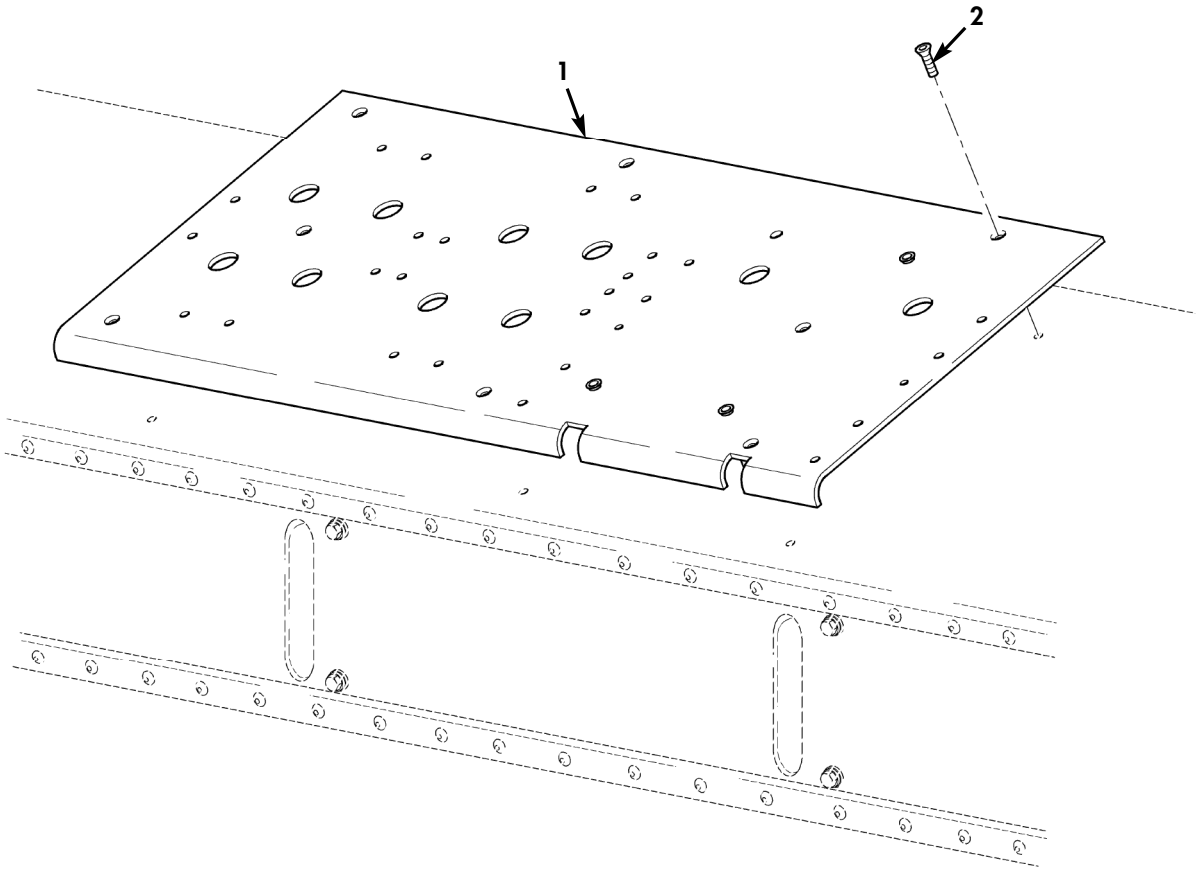

Figure 201P. Left Wheelhouse Stowage Plate.

(1) ITEM NO	(2) SMR CODE	(3) NSN	(4) CAGEC	(5) PART NUMBER	(6) DESCRIPTION AND USABLE ON CODES(UOC)	(7) QTY
					GROUP 1801 BODY,CAB,HOOD,AND HULL ASSEMBLY	
					FIG. 201P LEFT WHEELHOUSE STOWAGE PLATE	
* 1	PAOZZ	5340015739427	19207	12518573	PLATE,MOUNTING..... UOC:TT1	1
* 2	PAOZZ	5305009683515	80205	MS24667-34	SCREW,CAP,SOCKET HE 1/4-20 X 1.750.. UOC:TT1	6
					END OF FIGURE	

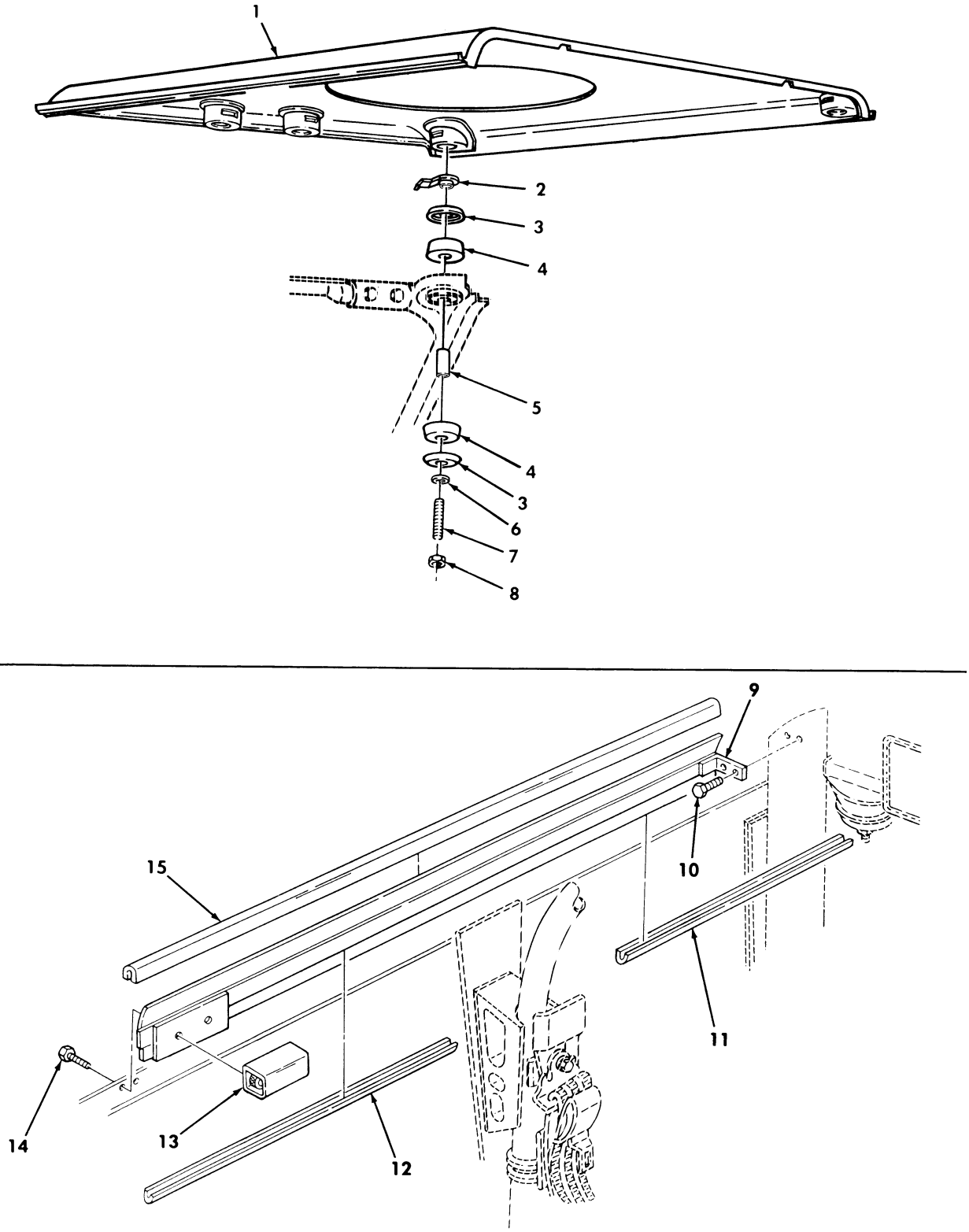

Figure 202. Roof and Mounting Components.

(1) ITEM NO	(2) SMR CODE	(3) NSN	(4) CAGEC	(5) PART NUMBER	(6) DESCRIPTION AND USABLE ON CODES(UOC)	(7) QTY
					GROUP 1801 BODY,CAB,HOOD,AND HULL ASSEMBLY	
					FIG. 202 ROOF AND MOUNTING COMPONENTS	
1	PBFZZ	2510014346626	6W728	4660800	PANEL,BODY,VEHICULA..... UOC:XBB	1
2	PAFZZ	5340012039391	34623	5583231	BRACKET,DOUBLE ANGL..... UOC:XBB	7
3	PAFZZ	2540011925949	19207	12339561	PLATE,SNUBBER,VEHIC..... UOC:XBB	14
4	PAFZZ	5340012110838	34623	5584891	MOUNT,RESILIENT..... UOC:XBB	14
5	PFFZZ	5365012160364	19207	12338186-52	SPACER,SLEEVE..... UOC:XBB	7
6	PAFZZ	5310014192413	6W728	4397005-014	WASHER,FLAT 13/32..... UOC:XBB	7
7	PAFZZ	5307012542504	19207	12339559	STUD,PLAIN 3/8-16 X 3.75..... UOC:XBB	7
8	PAFZZ	5310014398177	6W728	4397064-005	NUT,SELF-LOCKING,HE 3/8-16..... UOC:XBB	7
9	PFOZZ	2540014350464	6W728	4660406	ARMOR,SUPPLEMENTAL, L.H..... UOC:XBB	1
9	PFOZZ	2540014350462	6W728	4660407	ARMOR,SUPPLEMENTAL, R.H..... UOC:XBB	1
10	PAOZZ	5306014376309	6W728	4397010-006	BOLT,MACHINE 1/4-20 X 3/4..... UOC:XBB	4
* 11	MOOZZ		6W728	4668367-000	TRIM DOOR FRONT MAKE FROM TRIM,P/N 75000317,27.5 INCHES LONG..... UOC:XBB	2
* 12	MOOZZ		6W728	4668368-000	TRIM DOOR REAR MAKE FROM TRIM,P/N 75000317,25 INCHES LONG..... UOC:XBB	2
13	PFOZZ	5340014341375	6W728	4660313	COVER,ACCESS..... UOC:XBB	2
14	PAOZZ	5305002253843	80204	B1821BH025C100N	SCREW,CAP,HEXAGON H 1/4-20 X 1.00.. UOC:XBB	4
15	MOOZZ		6W728	4668962-68	SEAL,NONMETALLIC SP MAKE FROM TRIM, P/N 4668962,67.5 INCHES LONG..... UOC:XBB	1

END OF FIGURE

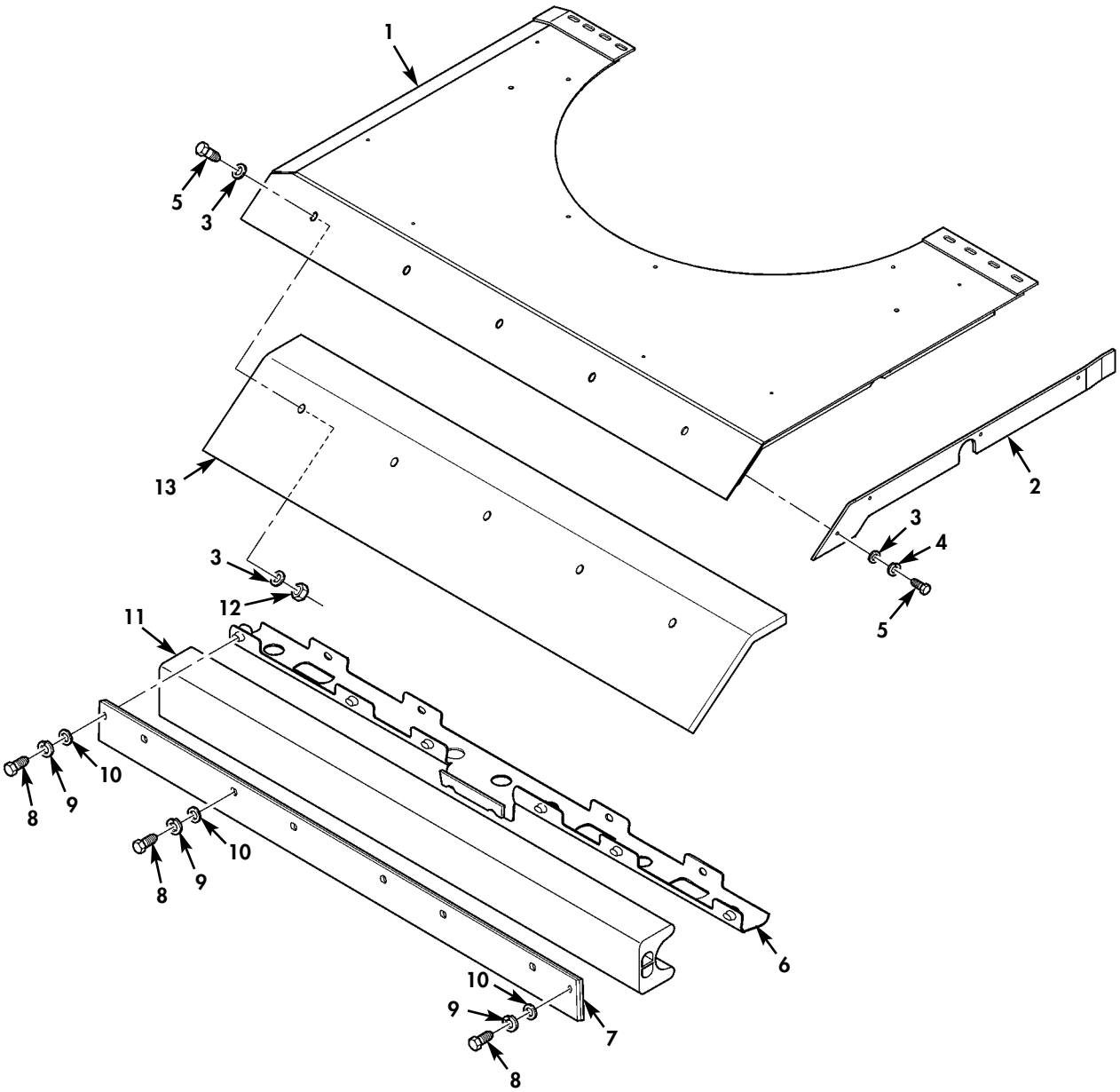

✱ QUANTITY SHOWN
REFLECTS ONE SIDE

Figure 202A. Roof Armor.

(1) ITEM NO	(2) SMR CODE	(3) NSN	(4) CAGEC	(5) PART NUMBER	(6) DESCRIPTION AND USABLE ON CODES(UOC)	(7) QTY
					GROUP 1801 BODY,CAB,HOOD,AND HULL ASSEMBLY	
					FIG. 202A ROOF ARMOR	
* 1	PAOZZ	9515015363556	6W728	6432491	PLATE,METAL L.H..... UOC:TTA,UU2	1
* 1	PAOZZ	9515015360635	6W728	6432492	PLATE,METAL R.H..... UOC:TTA,UU2	1
* 2	PAOZZ	9515015363578	6W728	6432760	PLATE,METAL L.H. OR R.H.,FRONT..... UOC:TTA,UU2	1
* 3	PAOZZ	5310000581305	19200	10910174-20	WASHER,FLAT 1/4..... UOC:TTA,UU2	14
* 4	PAOZZ	5310005825965	80205	MS35338-44	WASHER,LOCK 1/4..... UOC:TTA,UU2	4
* 5	PAOZZ	5305002253843	80204	B1821BH025C100N	SCREW,CAP,HEXAGON H 1/4-20 X 1.00... UOC:TTA,UU2	9
* 6	PAOZZ	5340015360506	6W728	6432777-200M1	BRACKET,MULTIPLE AN R.H..... UOC:TTA,UU2	1
* 6	PAOZZ	5340015357920	6W728	6432776-200M1	BRACKET,MOUNTING L.H..... UOC:TTA,UU2	1
* 7	PAOZZ	9515015383132	6W728	6432629-200M1	ARMOR,PLATE R.H..... UOC:TTA,UU2	1
* 7	PAOZZ	9515015383191	6W728	6432626-200M1	ARMOR,PLATE L.H..... UOC:TTA,UU2	1
* 7	PAOZZ		34623	6030656	ARMOR,PLATE R.H.,FRAG-1..... UOC:TTA,UU2	1
* 7	PAOZZ		34623	6030657	ARMOR,PLATE L.H.,FRAG-1..... UOC:TTA,UU2	1
* 8	PAOZZ	5305000680511	80204	B1821BH038C125N	SCREW,CAP,HEXAGON H 3/8-16 X 1.25... UOC:TTA,UU2	8
* 9	PAOZZ	5310006379541	65035	P49866-11	WASHER,LOCK 3/8..... UOC:TTA,UU2	8
* 10	PAOZZ	5310014124013	24617	2436163	WASHER,FLAT 3/8..... UOC:TTA,UU2	8
* 11	MOOZZ		34623	6025205	SEAL,NONMETALLIC MAKE FROM SEAL P/N ZR352P,70 INCHES LONG,L.H. OR R.H... UOC:TTA,UU2	1
* 12	PAOZZ	5310014398173	6W728	4397064-001	NUT,SELF-LOCKING,HE 1/4-20..... UOC:TTA,UU2	5
* 13	PAOZZ	2540015535282	6W728	6432759-200M1	ARMOR,SUPPLEMENTAL ROOF PLATE,INNER, L.H..... UOC:TTA,UU2	1
* 13	PAOZZ	2540015535303	6W728	6432761-200M1	ARMOR,SUPPLEMENTAL ROOF PLATE,INNER, R.H..... UOC:TTA,UU2	1

END OF FIGURE

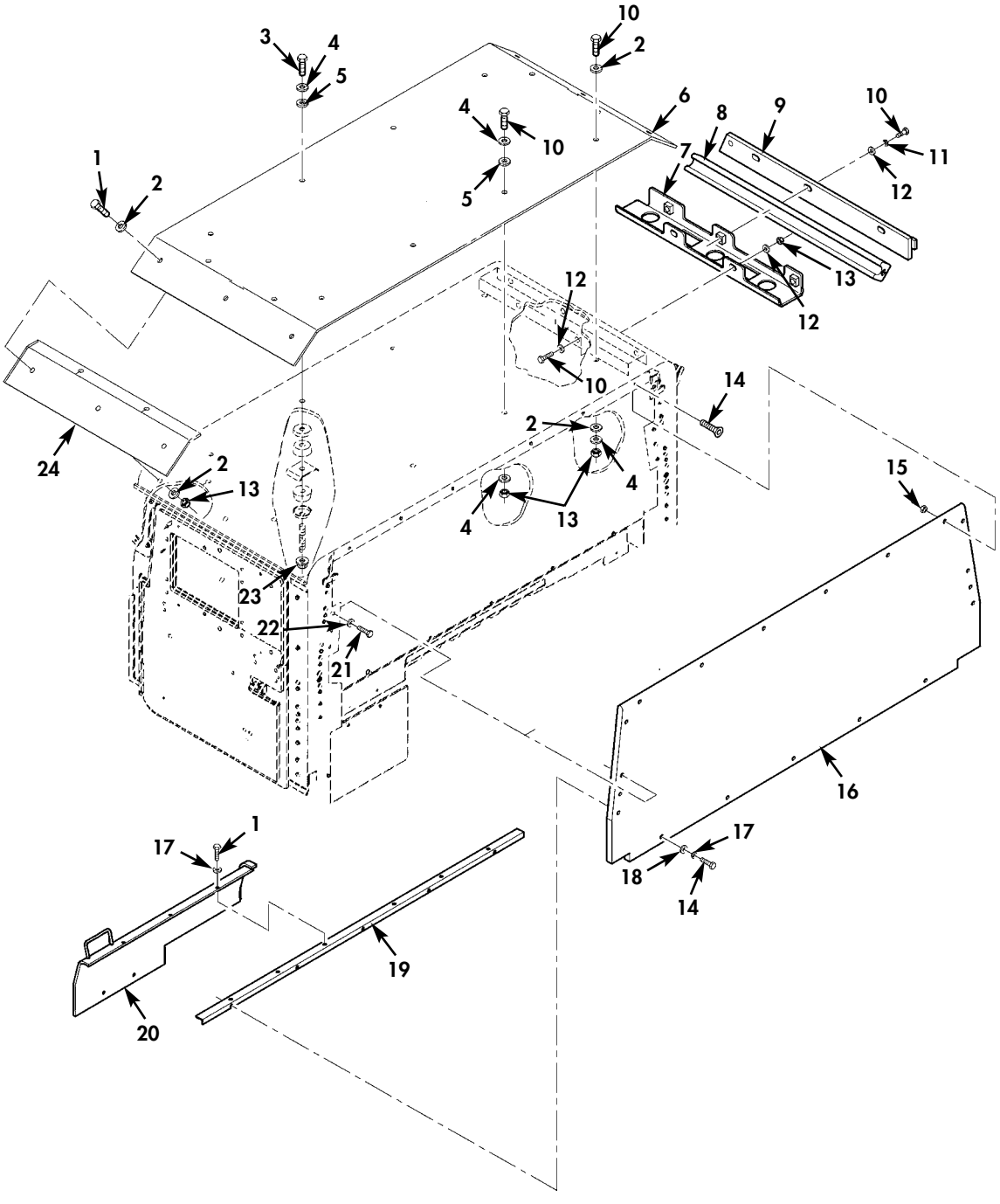

Figure 202B. Perimeter Armor and Mounting Hardware (M1152A1).

(1) ITEM NO	(2) SMR CODE	(3) NSN	(4) CAGEC	(5) PART NUMBER	(6) DESCRIPTION AND USABLE ON CODES(UOC)	(7) QTY
					GROUP 1801 BODY,CAB,HOOD,AND HULL ASSEMBLY	
					FIG. 202B PERIMETER ARMOR AND MOUNTING HARDWARE (M1152A1)	
* 1	PAOZZ	5305005432419	80204	B1821BH038C113N	SCREW,CAP,HEXAGON H 3/8-16 X 1.125.. UOC:UUA	21
* 2	PAOZZ	5310000581305	19200	10910174-20	WASHER,FLAT 3/8..... UOC:UUA	20
* 3	PAOZZ	5305007813928	80204	B1821BH038C400N	SCREW,CAP,HEXAGON H 3/8-16 X 4.00... UOC:UUA	2
* 4	PAOZZ	5310014124013	24617	2436163	WASHER,FLAT 3/8..... UOC:UUA	16
* 5	PAOZZ	5310015484856	34623	6019898	WASHER,SEAL..... UOC:UUA	8
* 6	PAOZZ		6W728	6433864-200M1	ARMOR,SUPPLEMENTAL ROOF WELDMENT.... UOC:UUA	1
* 7	PAOZZ		34623	6023772	HEADER,DOOR L.H..... UOC:UUA	1
* 7	PAOZZ		34623	6023775	HEADER,DOOR R.H..... UOC:UUA	1
* 8	MOOZZ		34623	6025205-1	SEAL,NONMETALLIC CH MAKE FROM SEAL P/N ZR352P,36.5 INCHES LONG..... UOC:UUA	2
* 9	PAOZZ		34623	6030699	ARMOR,PLATE L.H..... UOC:UUA	1
* 9	PAOZZ		34623	6030700	ARMOR,PLATE R.H..... UOC:UUA	1
* 10	PAOZZ	5305000680511	80204	B1821BH038C125N	SCREW,CAP,HEXAGON H 3/8-16 X 1.25... UOC:UUA	22
* 11	PAOZZ	5310000045033	80205	MS35338-46	WASHER,LOCK 3/8..... UOC:UUA	6
* 12	PAOZZ	5310009871294	19200	10910174-16	WASHER,FLAT 3/8..... UOC:UUA	14
* 13	PAOZZ	5310009359021	96906	MS51943-35	NUT,SELF-LOCKING,HE 3/8-16..... UOC:UUA	8
* 14	PAOZZ	5305009683513	80205	MS24667-32	SCREW,CAP,SOCKET HE 1/4-20 X 1.00... UOC:UUA	8
* 15	PAOZZ	5310000614650	80205	M45913/3-4CG8C	NUT,SELF-LOCKING,HE 1/4-20..... UOC:UUA	20
* 16	PAOZZ		34623	6028423	ARMOR,SUPPLEMENTAL..... UOC:UUA	1
* 17	PAOZZ	5310005825965	80205	MS35338-44	WASHER,LOCK 1/4..... UOC:UUA	34
* 18	PAOZZ	5310013330060	96906	MS51412-23	WASHER,FLAT 1/4..... UOC:UUA	8
* 19	PAOZZ		34623	6027994	BRACKET,ANGLE..... UOC:UUA	1
* 20	PAOZZ		34623	6028032	COVER,ACCESS R.H..... UOC:UUA	1
* 20	PAOZZ		34623	6027990	COVER,ACCESS L.H..... UOC:UUA	1

(1) ITEM NO	(2) SMR CODE	(3) NSN	(4) CAGEC	(5) PART NUMBER	(6) DESCRIPTION AND USABLE ON CODES(UOC)	(7) QTY
* 21	PAOZZ	5306002264829	80204	B1821BH031C125N	BOLT,MACHINE 5/16-18 X 1.25..... UOC:UUA	6
* 22	PAOZZ	5310000814219	96906	MS27183-12	WASHER,FLAT 5/16 PART OF KIT P/N 6034434..... UOC:UUA	6
* 23	PAOZZ	5310009308214	96906	MS51988-7	NUT,SELF-LOCKING,EX 3/8-16..... UOC:UUA	2
* 24	PAOZZ		6W728	6433860-200M1	ARMOR,SUPPLEMENTAL L.H. AND R.H..... UOC:UUA	2

END OF FIGURE

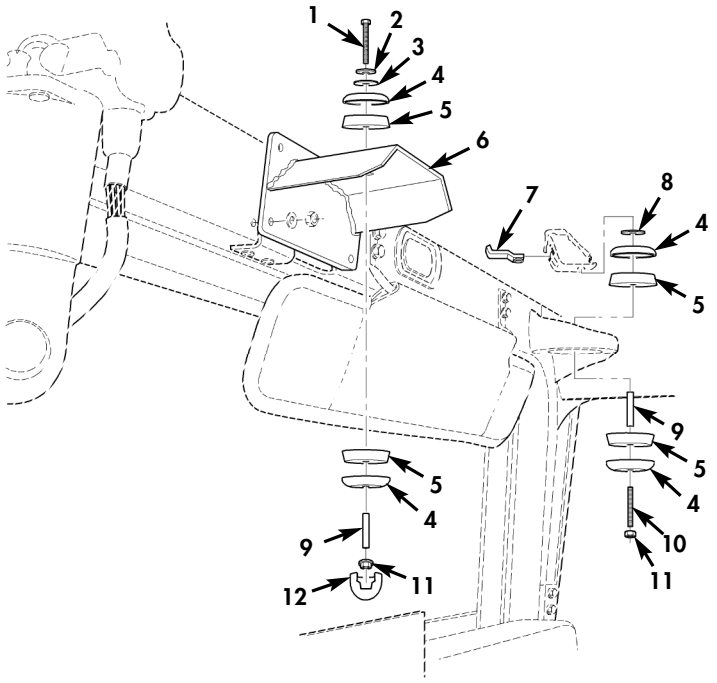

FRONT

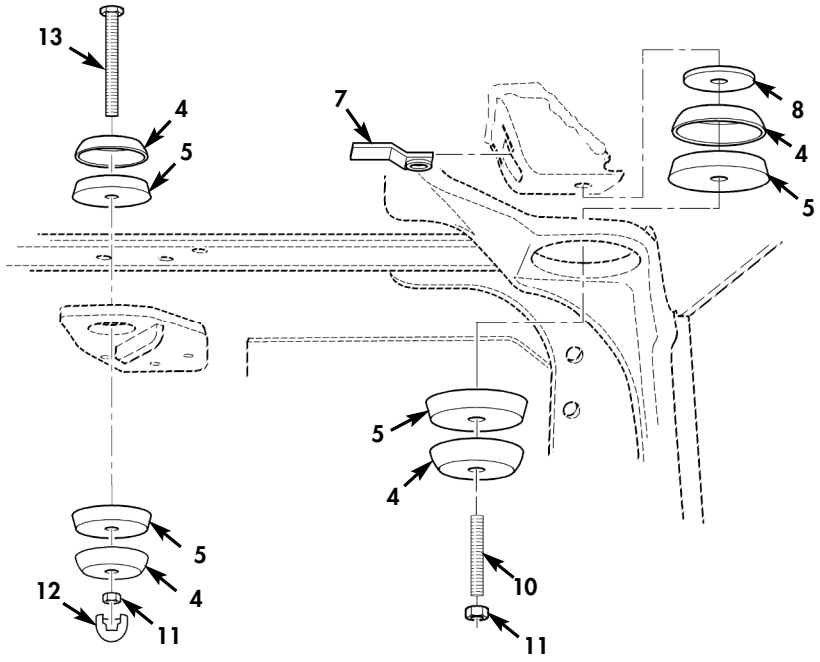

REAR

Figure 202C. Aluminum Roof Mounts and Related Hardware.

(1) ITEM NO	(2) SMR CODE	(3) NSN	(4) CAGEC	(5) PART NUMBER	(6) DESCRIPTION AND USABLE ON CODES(UOC)	(7) QTY
					GROUP 1801 BODY,CAB,HOOD,AND HUILL ASSEMBLY	
					FIG. 202C ALUMINIUM ROOF MOUNTS AND RELATED HARDWARE	
* 1	PAOZZ	5305009908632	80204	B1821BH038C375N	SCREW,CAP,HEXAGON H 3/8-16 X 3.75... UOC:TTA,TTT,TT1,UUA,UUU,UU1,UU2	2
* 2	PAOZZ	5310014124013	24617	2436163	WASHER,FLAT 3/8..... UOC:TTA,TTT,TT1,UUA,UUU,UU1,UU2	2
* 3	PAOZZ	5310015484856	34623	6019898	WASHER,SEAL..... UOC:TTA,TTT,TT1,UUA,UUU,UU1,UU2	2
* 4	PAOZZ	2540011925949	19207	12339561	PLATE,SNUBBER,VEHIC..... UOC:TTA,TTT,TT1,UUA,UUU,UU1,UU2	18
* 5	PAOZZ	5340012110838	19207	12339571	MOUNT,RESILIENT..... UOC:TTA,TTT,TT1,UUA,UUU,UU1,UU2	18
* 6	PAOZZ	5340015481476	34623	6016721	BRACKET,ANGLE..... UOC:TTA,TTT,TT1,UUA,UUU,UU1,UU2	2
* 7	PAOZZ	5340012039391	19207	12339563	BRACKET,DOUBLE ANGL FRONT..... UOC:TTA,TTT,TT1,UUA,UUU,UU1,UU2	4
* 7	PAOZZ	5340015479981	34623	6019772	BRACKET,MOUNTING REAR..... UOC:TTA,TTT,TT1,UUA,UUU,UU1,UU2	2
* 8	PAOZZ	5310012122303	19207	12339560	WASHER,SLOTTED..... UOC:TTA,TTT,TT1,UUA,UUU,UU1,UU2	16
* 9	PAOZZ	5365012160364	19207	12338186-52	SPACER,SLEEVE..... UOC:TTA,TTT,TT1,UUA,UUU,UU1,UU2	9
* 10	PAOZZ	5307015484853	34623	6019634	STUD,PLAIN..... UOC:TTA,TTT,TT1,UUA,UUU,UU1,UU2	5
* 11	PAOZZ	5310009308214	96906	MS51988-7	NUT,SELF-LOCKING,EX..... UOC:TTA,TTT,TT1,UUA,UUU,UU1,UU2	9
* 12	PAOZZ	5340015484281	34623	6023763	BUMPER..... UOC:TTA,TTT,TT1,UUA,UUU,UU1,UU2	3
* 13	PAOZZ	5305008576886	80204	B1821BH038C450N	SCREW,CAP,HEXAGON H 3/8-16 X 4.50... UOC:TTA,TTT,TT1,UUA,UUU,UU1,UU2	2

END OF FIGURE

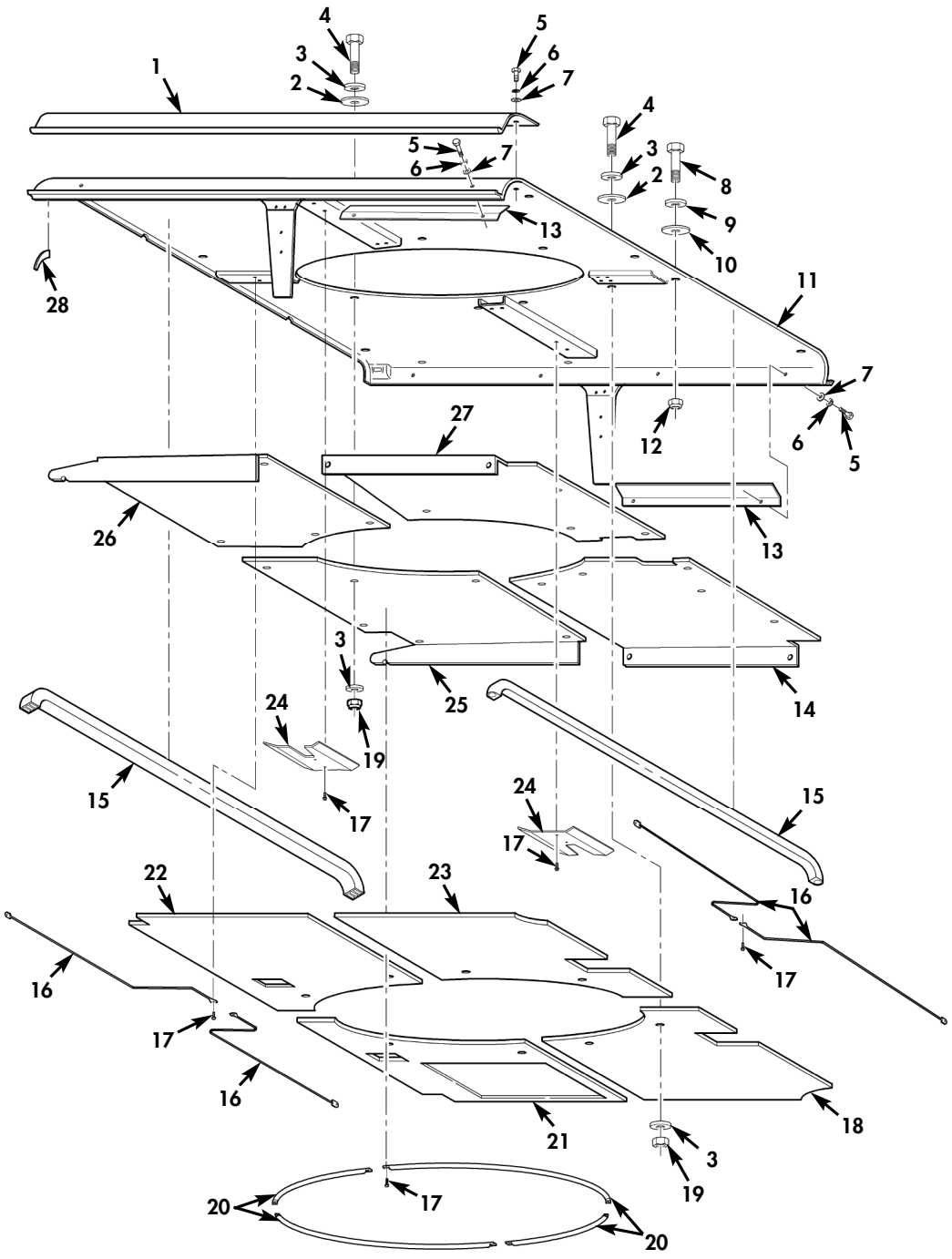

Figure 202D. Aluminum Roof and Related Parts.

(1) ITEM NO	(2) SMR CODE	(3) NSN	(4) CAGEC	(5) PART NUMBER	(6) DESCRIPTION AND USABLE ON CODES(UOC)	(7) QTY
					GROUP 1801 BODY,CAB,HOOD,AND HULL ASSEMBLY	
					FIG. 202D ALUMINIUM ROOF AND RELATED PARTS	
* 1	PAOZZ	9535015486632	34623	6013002	PLATE,METAL L.H..... UOC:TTA,TTT,UU1,UU2	1
* 1	PAOZZ	9535015486633	34623	6013019	PLATE,METAL R.H..... UOC:TTA,TTT,UU1,UU2	1
* 2	PAOZZ	5310015484856	34623	6019898	GASKET,FOAM WASHER..... UOC:TTA,TTT,UU1,UU2	12
* 3	PAOZZ	5310014124013	24617	2436163	WASHER,FLAT 3/8..... UOC:TTA,TTT,UU1,UU2	21
* 4	PAOZZ	5305006882111	80204	B1821BH038C138N	SCREW,CAP,HEXAGON H 3/8-16 X 1.38.. UOC:TTA,TTT,UU1,UU2	8
* 5	PAOZZ	5306002264829	80204	B1821BH031C125N	BOLT,MACHINE 5/16-18 X 1.25..... UOC:TTA,TTT,UU1,UU2	8
* 6	PAOZZ	5310004079566	80205	MS35338-45	WASHER,LOCK 5/16..... UOC:TTA,TTT,UU1,UU2	8
* 7	PAOZZ	5310000877493	96906	MS27183-13	WASHER,FLAT 3/8..... UOC:TTA,TTT,UU1,UU2	8
* 8	PAOZZ	5305000680508	80204	B1821BH025C075N	SCREW,CAP,HEXAGON H 1/4-20 X 3/4... UOC:TTA,TTT,UU1,UU2	8
* 9	PAOZZ	5310011023270	34623	2436161	WASHER,FLAT 1/4..... UOC:TTA,TTT,UU1,UU2	8
* 10	PAOZZ	5310015483774	34623	6016730	WASHER,SEAL..... UOC:TTA,TTT,UU1,UU2	8
* 11	PAOOO	2510015479739	34623	6015079	PANEL,BODY,VEHICULA..... UOC:TTA,TTT,UU1,UU2	1
* 12	PAOZZ	5310000614650	96906	M45913/3-4CG8C	NUT,SELF-LOCKING,HE 1/4-20..... UOC:TTA,TTT,UU1,UU2	8
* 13	PAOZZ	5340015481162	34623	6016436	PLATE,MENDING FRONT..... UOC:TTA,TTT,UU1,UU2	2
* 13	PAOZZ	5340015481158	34623	6016439	PLATE,MENDING REAR..... UOC:TTA,TTT,UU1,UU2	2
* 14	PAOZZ	2510015479930	34623	6019246	INSULATION PANEL,VE..... UOC:TTA,TTT,UU1,UU2	1
* 15	PAOZZ	5330015483799	34623	6019694	SEAL,NONMETALLIC FRONT..... UOC:TTA,TTT,UU1,UU2	1
* 15	PAOZZ	5330015482833	0NM25	6022899	SEAL,NONMETALLIC ST REAR..... UOC:TTA,TTT,UU1,UU2	1
* 16	PAOZZ	5340015480979	34623	6016445	ROD,SUPPORT FRONT,L.H.,REAR,R.H.... UOC:TTA,TTT,UU1,UU2	2
* 16	PAOZZ	5340015480334	34623	6016444	ROD,SUPPORT FRONT,R.H. REAR,L.H.... UOC:TTA,TTT,UU1,UU2	2
* 17	PAOZZ	5305012645809	19207	12342499-2	SCREW,TAPPING 10-32 X 5/8..... UOC:TTA,TTT,UU1,UU2	12
* 18	PAOZZ	2510015479898	34623	6016432	INSULATION PANEL,VE REAR,R.H..... UOC:TTA,TTT,UU1,UU2	1
* 19	PAOZZ	5310009359021	96906	MS51943-35	NUT,SELF-LOCKING,HE 3/8-16..... UOC:TTA,TTT,UU1,UU2	4

(1) ITEM NO	(2) SMR CODE	(3) NSN	(4) CAGEC	(5) PART NUMBER	(6) DESCRIPTION AND USABLE ON CODES(UOC)	(7) QTY
* 20	PAOZZ	3040015480981	34623	6016446	CONNECTING LINK,RIG FRONT..... UOC:TTA,TTT,UU1,UU2	2
* 20	PAOZZ	5340015484836	34623	6016447	ROD,STRAIGHT HEADLESS REAR..... UOC:TTA,TTT,UU1,UU2	2
* 21	PAOZZ	2540015481182	34623	6016430	INSULATION,THERMAL FRONT,R.H..... UOC:TTA,TTT,UU1,UU2	1
* 22	PAOZZ		34623	6024155	INSULATION ASSEMBLY FRONT,L.H..... UOC:TTA,TTT,UU1,UU2	1
* 23	PAOZZ	2510015479911	34623	6016433	INSULATION PANEL,VE REAR,L.H..... UOC:TTA,TTT,UU1,UU2	1
* 24	PAOZZ	2590015479874	34623	6016435	BRACKET,VEHICULAR C..... UOC:TTA,TTT,UU1,UU2	2
* 25	PAOZZ	2510015479945	34623	6019247	INSULATION PANEL,VE..... UOC:TTA,TTT,UU1,UU2	1
* 26	PAOZZ	2510015479980	34623	6019248	INSULATION,PANEL,VE..... UOC:TTA,TTT,UU1,UU2	1
* 27	PAOZZ	2510015481234	34623	6019249	PANEL,BODY,VEHICULA..... UOC:TTA,TTT,UU1,UU2	1
* 28	PAOZZ	5330015479973	34623	6019690	SEAL,NONMETALLIC..... UOC:TTA,TTT,UU1,UU2	2

END OF FIGURE

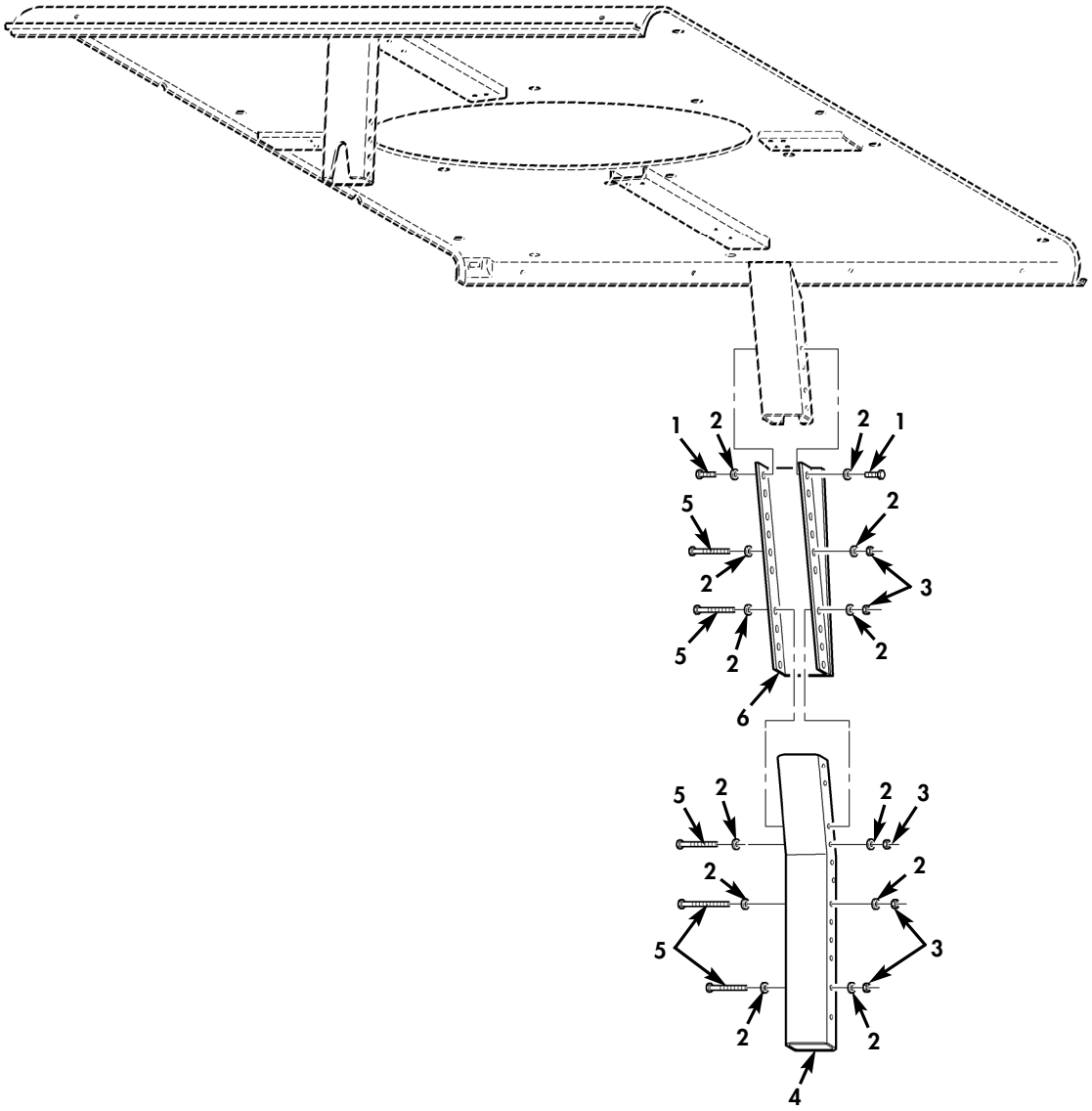

Figure 202E. B-Pillar and Related Hardware.

(1) ITEM NO	(2) SMR CODE	(3) NSN	(4) CAGEC	(5) PART NUMBER	(6) DESCRIPTION AND USABLE ON CODES(UOC)	(7) QTY
					GROUP 1801 BODY,CAB,HOOD,AND HULL ASSEMBLY	
					FIG. 202E B-PILLAR AND RELATED HARDWARE	
* 1	PAOZZ	5306002264829	80204	B1821BH031C125N	BOLT,MACHINE 5/16-18 X 1.25..... UOC:TTA,TTT,TT1,UU1,UU2	16
* 2	PAOZZ	5310011191024	24617	2436162	WASHER,FLAT..... UOC:TTA,TTT,TT1,UU1,UU2	64
* 3	PAOZZ	5310008140673	81349	M45913/3-5CG8C	NUT,SELF-LOCKING,HE 5/16-18..... UOC:TTA,TTT,TT1,UU1,UU2	24
* 4	PAOZZ	5305007813928	80204	B1821BH038C400N	SCREW,CAP,HEXAGON H 3/8-16 X 4.00... UOC:TTA,TTT,TT1,UU1,UU2	2
* 5	PAOZZ	5306002264842	80204	B1821BH031C425N	BOLT,MACHINE 5/16-18 X 4.25..... UOC:TTA,TTT,TT1,UU1,UU2	24
* 6	PAOZZ	2510015479918	34623	6013482	FRAME SECTION,STRUC L.H..... UOC:TTA,TTT,TT1,UU1,UU2	1
* 6	PAOZZ	2510015481193	34623	6013563	FRAME SECTION,STRUC R.H..... UOC:TTA,TTT,TT1,UU1,UU2	1

END OF FIGURE

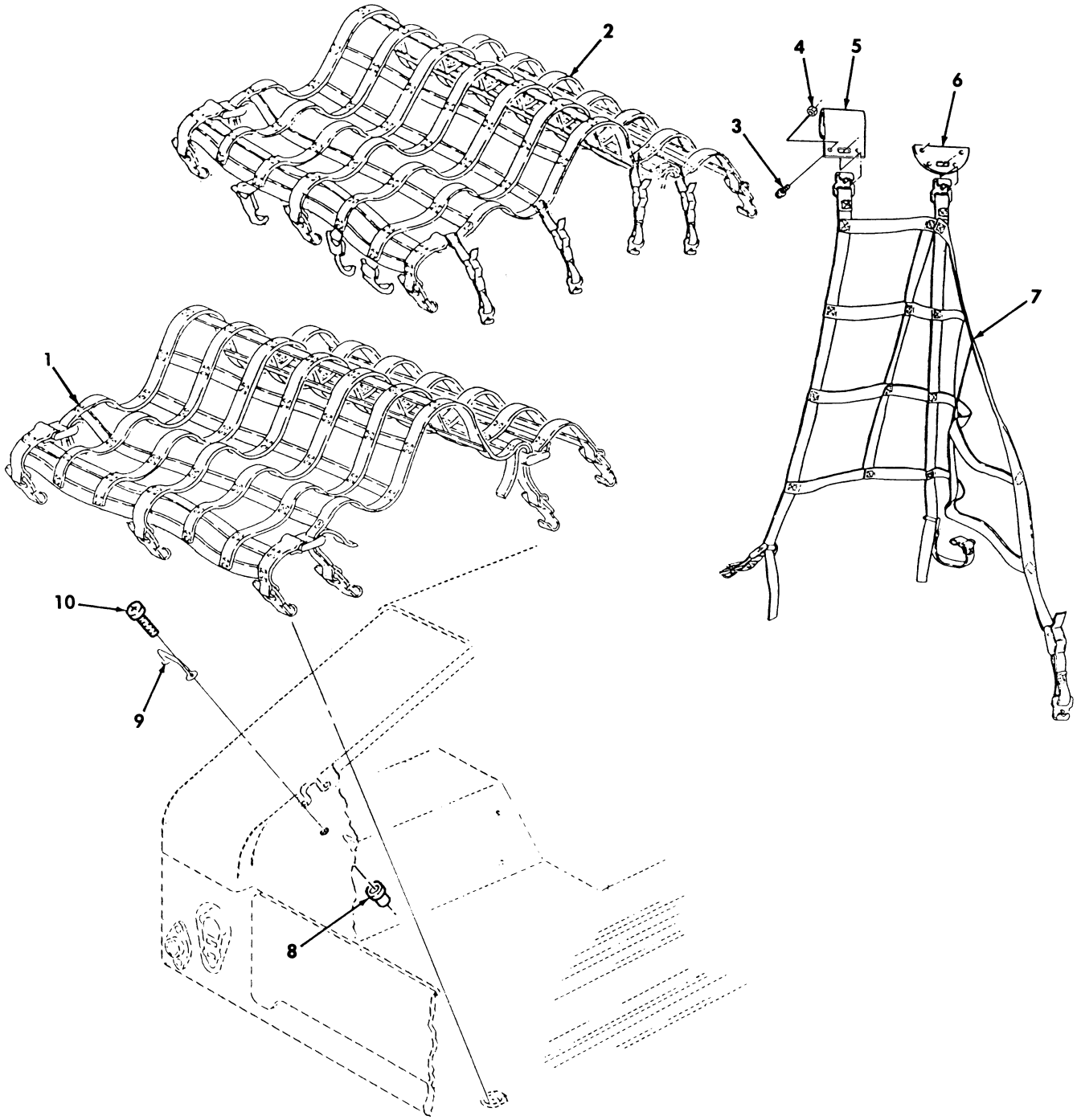

Figure 203. Interior and Exterior Net Assemblies and Related Parts.

(1) ITEM NO	(2) SMR CODE	(3) NSN	(4) CAGEC	(5) PART NUMBER	(6) DESCRIPTION AND USABLE ON CODES(UOC)	(7) QTY
					GROUP 1801 BODY,CAB,HOOD AND HULL ASSEMBLY	
					FIG. 203 INTERIOR NET ASSEMBLIES, CARGO BULKHEAD,AND RELATED ITEMS	
* 1	PAOZZ	3990014514203	6W728	4660721	TIE DOWN,CARGO,VEHI..... UOC:XBB	1
* 2	PAOZZ	5340014158672	19207	12446812	STRAP,WEBBING..... UOC:TTT,UUU,XBB	1
* 3	PAOZZ	5305000687837	80204	B1821BH025C063N	BOLT,MACHINE .250-20 X .625..... UOC:XBB	2
4	PAOZZ	5310000614650	96906	MS51943-31	NUT,SELF-LOCKING,HE..... UOC:XBB	2
5	PAOZZ	5340014086462	19207	12446899	BRACKET,MOUNTING L.H..... UOC:XBB	4
6	PAOZZ	5340014086458	19207	12446900	BRACKET,MOUNTING R.H..... UOC:XBB	1
* 7	PAOZZ	3990014116575	19207	12446811	TIE DOWN,CARGO,VEHI..... UOC:XBB	1
8	PAOZZ	5325014110066	78276	ALS4-1024-130	INSERT,SCREW THREAD..... UOC:XBB	40
9	PAOZZ	5340013145957	19207	12338839-1	LOOP,STRAP FASTENER..... UOC:XBB	20
10	PAOZZ	5305014108386	24617	156966	SCREW,MACHINE..... UOC:XBB	40

END OF FIGURE

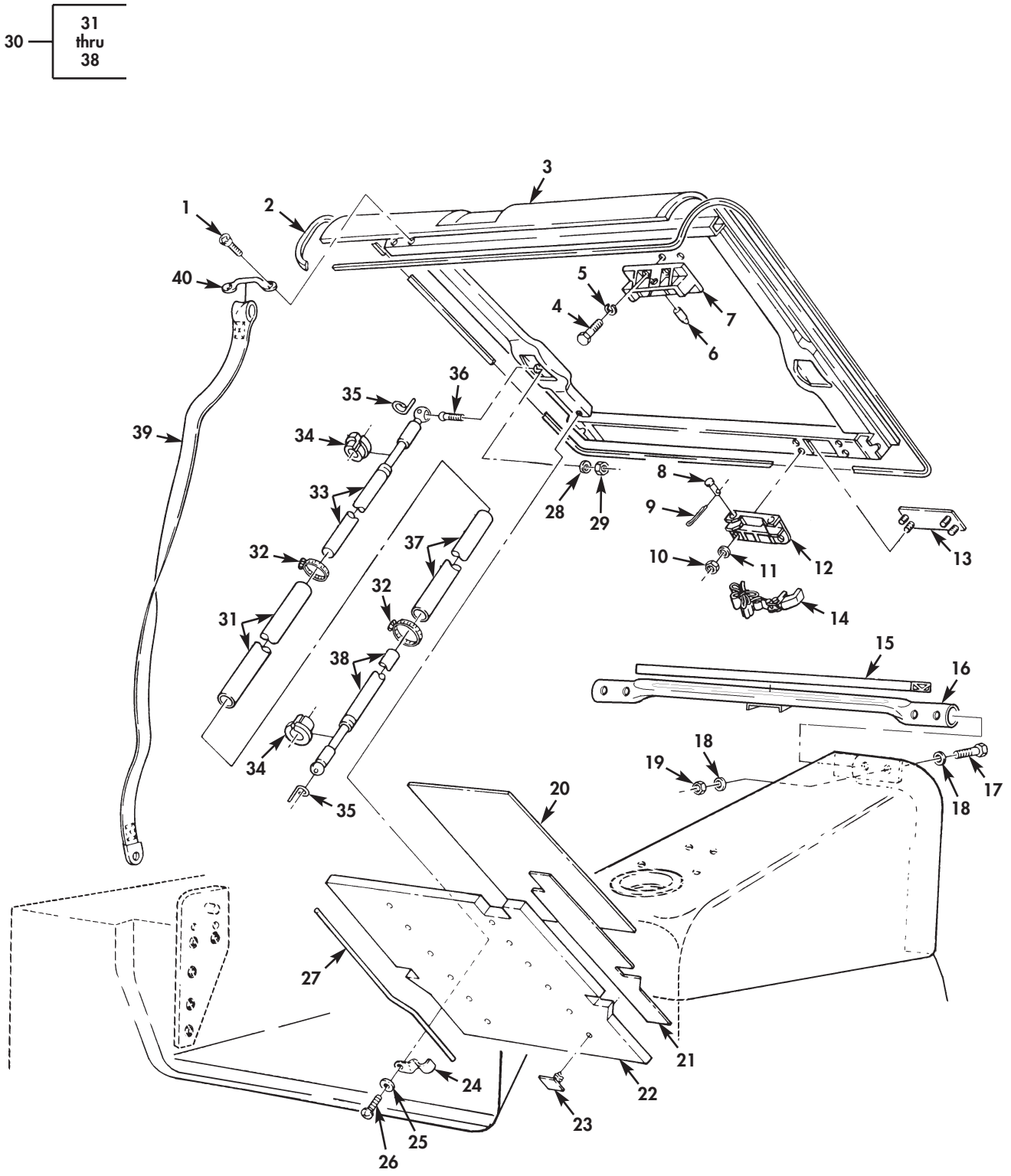

Figure 204. Cargo Shell Door, Insulation, Intermediate Pillar, Gas Spring, and Related Components.

(1) ITEM NO	(2) SMR CODE	(3) NSN	(4) CAGEC	(5) PART NUMBER	(6) DESCRIPTION AND USABLE ON CODES(UOC)	(7) QTY
					GROUP 1801 BODY,CAB,HOOD,AND HULL ASSEMBLY	
					FIG. 204 CARGO SHELL DOOR,INSULATION, INTERMEDIATE PILLAR,GAS SPRING,AND RELATED COMPONENTS	
* 1	PAOZZ	5305012542459	34623	5593313	SCREW,ASSEMBLED WAS #10-32 X 3/4... UOC:TTT,XBB	2
* 2	PAOZZ	5330011959083	34623	12339595	SEAL,NONMETALLIC SP..... UOC:TTT,XBB	1
* 3	PFOOO	2510014567889	19207	12446907	DOOR,HATCH,VEHICLE BASIC ARMOR..... UOC:XBB	1
* 4	PAOZZ	5306002258499	96906	MS90725-34	BOLT,MACHINE 5/16-18 X 1.00..... UOC:TTT,XBB	4
* 5	PAOZZ	5310004079566	96906	MS35338-45	WASHER,LOCK 5/16..... UOC:TTT,XBB	4
* 6	PAOZZ	5315002555580	18876	10189683	PIN,SHOULDER,HEADLE..... UOC:TTT,XBB	1
* 7	PFOZZ	5340011972717	19207	10192299	BRACKET,MOUNTING..... UOC:TTT,XBB	1
* 8	PAOZZ	5315009837402	96906	MS20392-4C69	PIN,STRAIGHT,HEADED..... UOC:TTT,XBB	2
* 9	PAOZZ	5315002341861	80205	MS24665-298	PIN,COTTER..... UOC:TTT,XBB	2
* 10	PAOZZ	5310008140673	96906	MS51943-33	NUT,SELF-LOCKING,HE 5/16-18..... UOC:TTT,XBB	4
* 11	PAOZZ	5310011191024	24617	2436162	WASHER,FLAT 5/16..... UOC:TTT,XBB	4
* 12	PFOZZ	5340011971444	19207	10192302	BRACKET,MOUNTING FRONT..... UOC:TTT,XBB	1
* 13	PFOZZ	2540012102749	34623	5583291	PLATE,MOUNTING,LAUN..... UOC:TTT,XBB	1
* 14	PAOZZ	5340011991662	31272	45053-10	STRAP,WEBBING..... UOC:TTT,XBB	1
* 15	PAFZZ	5330011978298	06968	ORD-112	SEAL..... UOC:TTT,XBB	1
* 16	PFFZZ	2510011899741	19207	12339612	FRAME SECTION,STRUC..... UOC:TTT,XBB	1
* 17	PAFZZ	5305008465703	80204	B1821BH038C300N	SCREW,CAP,HEXAGON H 3/8-16 X 3.00.. UOC:TTT,XBB	4
* 18	PAFZZ	5310014124013	24617	2436163	WASHER,FLAT 3/8..... UOC:TTT,XBB	8
* 19	PAFZZ	5310009359021	96906	MS51943-35	NUT,SELF-LOCKING,HE 3/8-16..... UOC:TTT,XBB	4
* 20	PAOZZ	2510012491580	19207	12339650	INSULATION PANEL,VE..... UOC:TTT,XBB	1
* 21	PAOZZ	2510012491581	19207	12339649-2	DAMPNER,SOUND,DOOR R.H..... UOC:TTT,XBB	1
* 21	PAOZZ	2510012491582	19207	12339649-1	INSULATION PANEL,VE L.H..... UOC:TTT,XBB	1
* 22	PAOZZ	2510012491583	19207	12339625	LINER,DOOR,CARGO..... UOC:TTT,XBB	1

(1) ITEM NO	(2) SMR CODE	(3) NSN	(4) CAGEC	(5) PART NUMBER	(6) DESCRIPTION AND USABLE ON CODES(UOC)	(7) QTY
* 23	PAOZZ	5325012570801	02768	M36-0790-10	FASTENER,SPRING TEN..... UOC:TTT,XBB	12
* 24	PAOZZ	5340012604881	34623	5591114	CLIP,SPRING TENSION..... UOC:TTT,XBB	10
* 25	PAOZZ	5310014177333	6W728	4397005-008	WASHER,FLAT .219..... UOC:TTT,XBB	10
* 26	PAOZZ	5305014343286	6W728	4397054-030	SCREW,TAPPING #10 X .75..... UOC:TTT,XBB	10
* 27	PAOZZ	4710012513076	34623	5591115	TUBE,BENT,METALLIC..... UOC:TTT,XBB	2
* 28	PAOZZ	5310011191024	24617	2436162	WASHER,FLAT 5/16..... UOC:TTT,XBB	2
* 29	PAOZZ	5310008140673	96906	MS51943-33	NUT,SELF-LOCKING,HE 5/16-18..... UOC:TTT,XBB	2
* 30	PAOOO	2590012121057	19207	12340832-3	PARTS KIT,DOOR LIFT..... UOC:TTT,XBB	2
* 31	PFOZZ	4710011927965	34623	5579895	.TUBE,METALLIC..... UOC:TTT,XBB	1
* 32	PAOZZ	4730009083194	76599	H12SS	.CLAMP,HOSE..... UOC:TTT,XBB	2
* 33	PAOZZ	5340012187739	19207	12340041-4	.CLOSER,DOOR..... UOC:TTT,XBB	1
* 34	PFOZZ	3120012004105	19207	12339602	.BUSHING HALF,SLEEVE..... UOC:TTT,XBB	2
* 35	PAOZZ	5325011354290	55787	012351	.RING,RETAINING..... UOC:TTT,XBB	2
* 36	PAOZZ	5307014493769	19207	12339609	.STUD,BALL..... UOC:TTT,XBB	1
* 37	PFOZZ	4710011929546	34623	5579894	.TUBE,METALLIC..... UOC:TTT,XBB	1
* 38	PAOZZ	5340012362112	55787	F2802	.CLOSER,DOOR..... UOC:TTT,XBB	1
* 39	PAOZZ	5340011976753	31272	44884	STRAP,WEBBING..... UOC:TTT,XBB	1
* 40	PAOZZ	5340004895684	19220	6411-B	LOOP,STRAP FASTENER..... UOC:TTT,XBB	1

END OF FIGURE

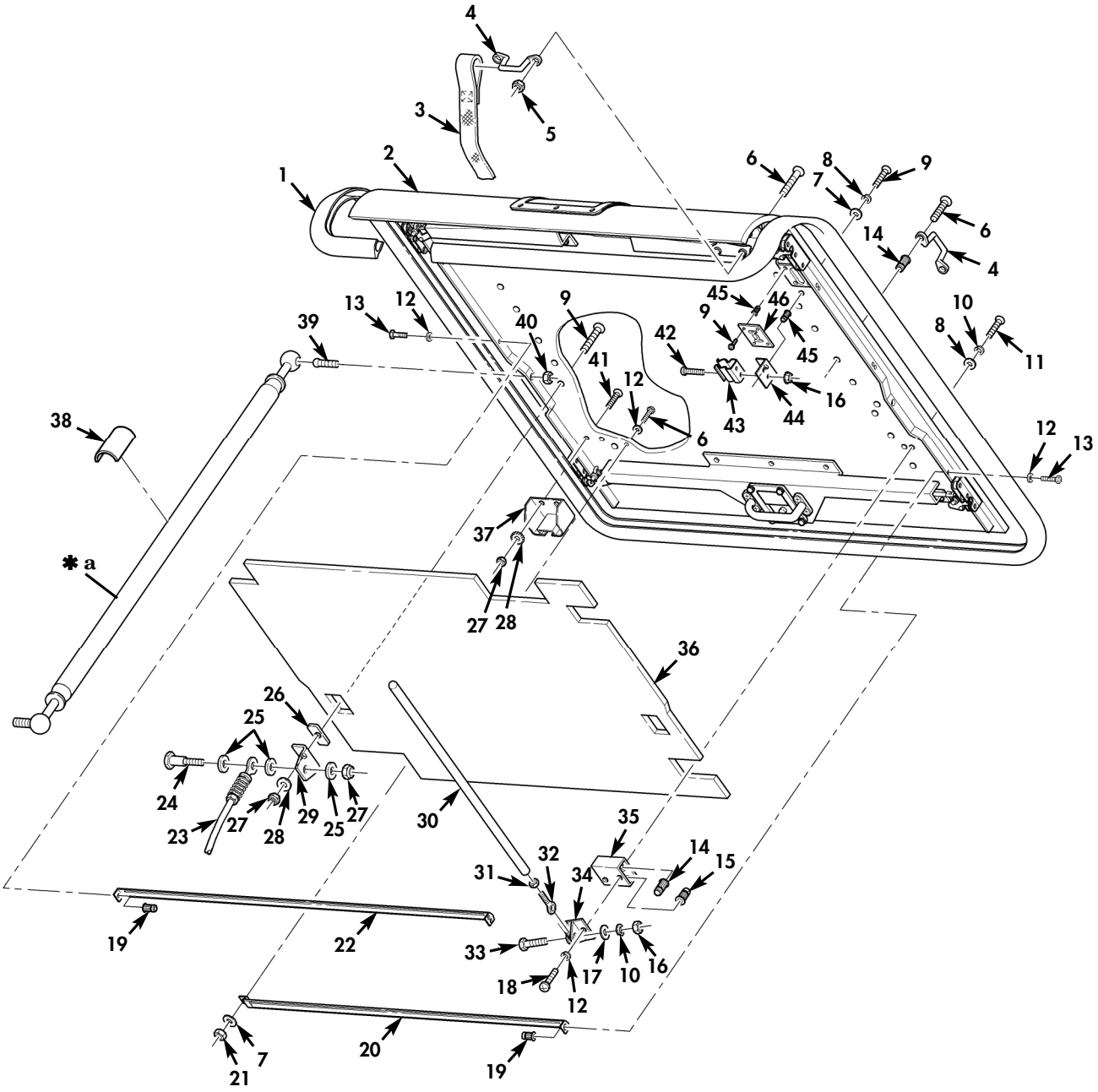

✱a PART OF ITEM 30

Figure 204A Aluminum Cargo Shell Door, Insulation, Gas Spring and Related Parts.

(1) ITEM NO	(2) SMR CODE	(3) NSN	(4) CAGEC	(5) PART NUMBER	(6) DESCRIPTION AND USABLE ON CODES(UOC)	(7) QTY
					GROUP 1801 BODY,CAB,HOOD,AND HULL ASSEMBLY	
					FIG. 204A ALUMINIUM CARGO SHELL DOOR, INSULATION,GAS SPRING AND RELATED PARTS	
* 1	MOOZZ		34623	6025579	SEAL,NONMETALLIC,ST MAKE FROM SEAL P/N 6025527 LENGTH AS REQUIRED..... UOC:TTA,TTT,TT1	1
* 2	PAOZZ		34623	6013083	DOOR,HATCH,VEHICLE..... UOC:TTA,TTT,TT1	1
* 3	PAOZZ	5340011976753	19207	12339621	STRAP,WEBBING..... UOC:TTA,TTT,TT1	1
* 4	PAOZZ	5340013145957	19207	12338839-1	LOOP,STRAP FASTENER..... UOC:TTA,TTT,TT1	20
* 5	PAOZZ	5310009349758	80205	MS35649-202	NUT,SELF-LOCKING,EX 10-24..... UOC:TTA,TTT,TT1	40
* 6	PAOZZ	5305009576269	05047	ASME B18.6.3	SCREW,MACHINE..... UOC:TTA,TTT,TT1	44
* 7	PAOZZ	5310012349416	96906	MS51412-2	WASHER,FLAT 7/32..... UOC:TTA,TTT,TT1	50
* 8	PAOZZ	5310011023270	24617	2436161	WASHER,FLAT 1/4..... UOC:TTA,TTT,TT1	9
* 9	PAOZZ	5305015482600	34623	6022906	SCREW,CAP,SOCKET HE 1/4-20 X 1.50.. UOC:TTA,TTT,TT1	4
* 10	PAOZZ	5310005825965	80205	MS35338-44	WASHER,LOCK 1/4..... UOC:TTA,TTT,TT1	8
* 11	PAOZZ	5305015484872	34623	6014988	SCREW,CAP,SOCKET HE 1/4-20 X 1.125. UOC:TTA,TTT,TT1	4
* 12	PAOZZ	5310000453296	80205	MS35338-43	WASHER,LOCK #10..... UOC:TTA,TTT,TT1	7
* 13	PAOZZ	5305002406668	96906	MS51849-78	SCREW,MACHINE 10-24 X 1.00..... UOC:TTA,TTT,TT1	7
* 14	PAOZZ	5310014113422	78276	ALS4-420-165	INSERT,SCREW,THREAD 1/4-20..... UOC:TTA,TTT,TT1	2
* 15	PAOZZ	5325014364285	78276	AKS4-632-130	INSERT,SCREW THREAD #6-32..... UOC:TTA,TTT,TT1	2
* 16	PAOZZ	5310009050762	96906	MS51967-3	NUT,PLAIN,HEXAGON 1/4-20..... UOC:TTA,TTT,TT1	1
* 17	PAOZZ	5310008094058	96906	MS27183-10	WASHER,FLAT 1/4..... UOC:TTA,TTT,TT1	1
* 18	PAOZZ	5305009897435	80205	MS35207-264	SCREW,MACHINE 10-32 X 5/8..... UOC:TTA,TTT,TT1	2
* 19	PAOZZ	5325014704624	34623	5939712	INSERT,SCREW THREAD..... UOC:TTA,TTT,TT1	7
* 20	PAOZZ	5340015486639	34623	6018845	BRACKET,MOUNTING..... UOC:TTA,TTT,TT1	1
* 21	PAOZZ	5310009349758	80205	MS35649-202	NUT,PLAIN,HEXAGON 10-24..... UOC:TTA,TTT,TT1	1
* 22	PAOZZ	5340015486638	34623	6018843	BRACKET MOUNTING..... UOC:TTA,TTT,TT1	2
* 23	PAOZZ	4010015480021	34623	6024170	WIRE ROPE ASSEMBLY..... UOC:TTA,TTT,TT1	1
* 24	PAOZZ	5306015485059	19207	12340001-1	BOLT,SHOULDER.....	1

(1) ITEM NO	(2) SMR CODE	(3) NSN	(4) CAGEC	(5) PART NUMBER	(6) DESCRIPTION AND USABLE ON CODES(UOC)	(7) QTY
					UOC:TTA,TTT,TT1	
* 25	PAOZZ	5310011946459	19207	12339724	WASHER,FLAT 5/16.....	3
					UOC:TTA,TTT,TT1	
* 26	PAOZZ	5365015482577	34623	6022903	SPACER,STRAIGHT.....	1
					UOC:TTA,TTT,TT1	
* 27	PAOZZ	5310000614650	96906	M45913/3-4CG8C	NUT,SELF-LOCKING,HE 1/4-20.....	2
					UOC:TTA,TTT,TT1	
* 28	PAOZZ	5310008093078	96906	MS27183-11	WASHER,FLAT 1/4.....	1
					UOC:TTA,TTT,TT1	
* 29	PAOZZ	5340015484859	34623	6013088	BRACKET,MOUNTING.....	1
					UOC:TTA,TTT,TT1	
* 30	PAOZZ	5342014594992	19207	12460330	EXTENSION,CONTROL R.....	1
					UOC:TTA,TTT,TT1	
* 31	PAOZZ	5310007680319	96906	MS51968-2	NUT,PLAIN,HEXAGON 1/4-28.....	1
					UOC:TTA,TTT,TT1	
* 32	PAOZZ	3120014577089	81343	J1120S4TYBCL2A	BEARING,PLAIN,ROD E.....	1
					UOC:TTA,TTT,TT1	
* 33	PAOZZ	5305000680509	80204	B1821BH025C125N	SCREW,CAP,HEXAGON H 1/4-20 X 1.25..	1
					UOC:TTA,TTT,TT1	
* 34	PAOZZ	5340014695774	19207	12460331	BRACKET,MULTIPLE AN.....	1
					UOC:TTA,TTT,TT1	
* 35	PAOZZ	5340015481480	34623	6019100	BRACKET,MOUNTING.....	1
					UOC:TTA,TTT,TT1	
* 36	PAOZZ	2510015480016	34623	6016434	INSULATION PANEL,VE.....	1
					UOC:TTA,TTT,TT1	
* 37	PAOZZ	5342011945806	19207	12339579	BRACKET,DOVETAIL.....	1
					UOC:TTA,TTT,TT1	
* 38	PCOZZ	7690012047785	19207	12340814	DECAL NO HAND HOLD.....	2
					UOC:TTA,TTT,TT1	
* 39	PAOZZ	5307015484869	34623	6022264	BALL STUD.....	2
					UOC:TTA,TTT,TT1	
* 40	PAOZZ	5310001766611	96906	MS51988-5	NUT,SELF-LOCKING.....	1
					UOC:TTA,TTT,TT1	
* 41	PAOZZ	5305009931611	80205	MS24667-33	SCREW,CAP,HEXAGON H.....	4
					UOC:TTA,TTT,TT1	
* 42	PAOZZ	5305008893000	80205	MS35206-230	SCREW,MACHINE.....	2
					UOC:TTA,TTT,TT1	
* 43	PAOZZ	5340014508693	81343	NAS1464-050-10T	CLIP,SPRING TENSION.....	1
					UOC:TTA,TTT,TT1	
* 44	PAOZZ	5340015480882	34623	6022761	BRACKET,MOUNTING.....	1
					UOC:TTA,TTT,TT1	
* 45	PAOZZ	5325014759697	78276	ALS4-1024-225	INSERT,SCREW THREAD 1/4-20.....	8
					UOC:TTA,TTT,TT1	
* 46	PAOZZ	2510015486642	34623	6013091	PANEL,BODY,VEHICULA.....	2
					UOC:TTA,TTT,TT1	

END OF FIGURE

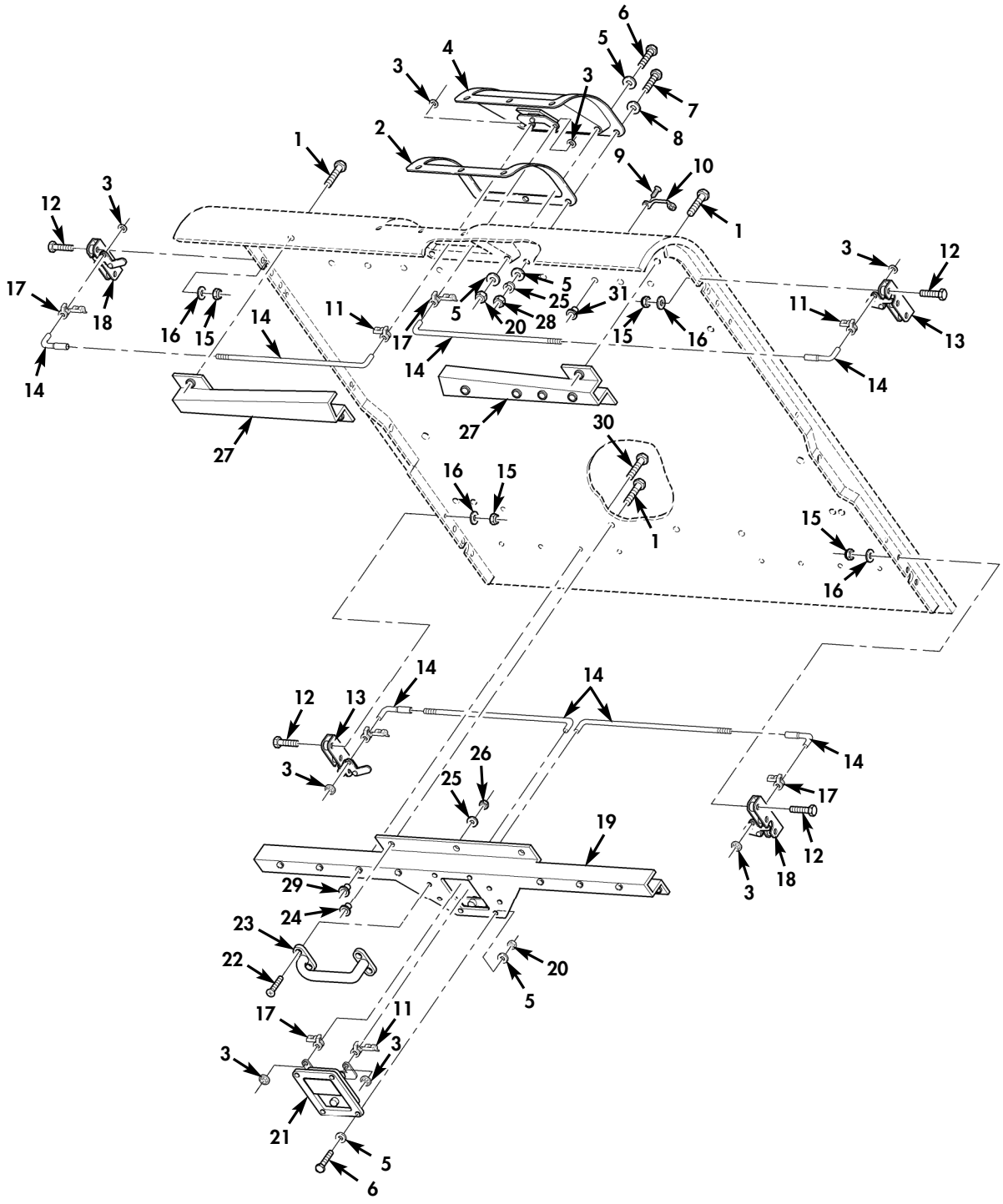

Figure 204B. Aluminum Cargo Shell Door and Related Parts.

(1) ITEM NO	(2) SMR CODE	(3) NSN	(4) CAGEC	(5) PART NUMBER	(6) DESCRIPTION AND USABLE ON CODES(UOC)	(7) QTY
					GROUP 1801 BODY,CAB,HOOD,AND HULL ASSEMBLY	
					FIG. 204B ALUMINIUM CARGO SHELL DOOR AND RELATED PARTS	
* 1	PAOZZ	5305015480010	34623	6014993	SCREW,CAP,SOCKET HE 10-24 X 3/4.... UOC:TTA,TTT,TT1	3
* 2	PAOZZ	5340015480910	19207	12339591	PANEL,BLANK..... UOC:TTA,TTT,TT1	1
* 3	PAOZZ	5310015484372	34623	6022997	NUT,SHEET SPRING..... UOC:TTA,TTT,TT1	8
* 4	PAOZZ	5340011971238	19220	1-5073-U	CATCH,FLUSH..... UOC:TTA,TTT,TT1	1
* 5	PAOZZ	5310012349416	96906	MS51412-2	WASHER,FLAT #10..... UOC:TTA,TTT,TT1	12
* 6	PAOZZ	5305004703321	96906	MS51849-74	SCREW,MACHINE 10-24 X .470..... UOC:TTA,TTT,TT1	8
* 7	PAOZZ	5305002253843	80204	B1821BH025C100N	SCREW,CAP,HEXAGON H 1/4-20 X 1.00.. UOC:TTA,TTT,TT1	4
* 8	PAOZZ	5310011023270	34623	2436161	WASHER,FLAT 1/4..... UOC:TTA,TTT,TT1	4
* 9	PAOZZ	5305009846213	80205	MS35206-266	SCREW,MACHINE 10-24 X 7/8..... UOC:TTA,TTT,TT1	24
* 10	PAOZZ	5340013145957	19207	12338839-1	LOOP,STRAP FASTENER..... UOC:TTA,TTT,TT1	20
* 11	PAOZZ	5340011968158	19207	12340003	CLIP,ROD RETAINER..... UOC:TTA,TTT,TT1	8
* 12	PAOZZ	5305002264831	80204	B1821BH031C150N	SCREW,CAP,HEXAGON H 5/16-18 X 1.50. UOC:TTA,TTT,TT1	12
* 13	PAOZZ	5340011985455	19220	3-400-L (25)	PLATE,MOUNTING..... UOC:TTA,TTT,TT1	2
* 14	PAOZZ	5340011972736	19220	16386(71)	ROD END,THREADED..... UOC:TTA,TTT,TT1	4
* 15	PAOZZ	5310008140673	81349	M45913/3-5CG8C	NUT,SELF-LOCKING,HE 5/16-18..... UOC:TTA,TTT,TT1	12
* 16	PAOZZ	5310000814219	96906	MS27183-12	WASHER,FLAT 5/16..... UOC:TTA,TTT,TT1	12
* 17	PAOZZ	5340011958837	0ZJZ0	HS-49745	CLIP,RETAINING..... UOC:TTA,TTT,TT1	4
* 18	PAOZZ	5340011996103	19207	12339880-2	LATCH,DOOR..... UOC:TTA,TTT,TT1	2
* 19	PAOZZ		34623	6013842	PANEL,ROD COVER..... UOC:TTA,TTT,TT1	1
* 20	PAOZZ	5310009349758	80205	MS35649-202	NUT,PLAIN,HEXAGON 10-24..... UOC:TTA,TTT,TT1	8
* 21	PAOZZ	5340012598600	19220	34-4974-51X	CATCH,FLUSH..... UOC:TTA,TTT,TT1	1
* 22	PAOZZ	5305015505721	24617	156103	SCREW,MACHINE..... UOC:TTA,TTT,TT1	4
* 23	PAOZZ	5340011978239	34623	12339581	HANDLE,BOW..... UOC:TTA,TTT,TT1	1
* 24	PAOZZ	5310014113422	78276	ALS4-420-165	INSERT,SCREW,THREAD 1/4-20.....	3

(1) ITEM NO	(2) SMR CODE	(3) NSN	(4) CAGEC	(5) PART NUMBER	(6) DESCRIPTION AND USABLE ON CODES(UOC)	(7) QTY
					UOC:TTA,TTT,TT1	
* 25	PAOZZ	5310011023270	34623	2436161	WASHER,FLAT 1/4.....	8
					UOC:TTA,TTT,TT1	
* 26	PAOZZ	5310012041039	7X677	272474	NUT,PLAIN,ASSEMBLED 12-24.....	4
					UOC:TTA,TTT,TT1	
* 27	PAOZZ	5340015480885	34623	6014045	COVER STRIP L.H.....	1
					UOC:TTA,TTT,TT1	
* 27	PAOZZ	5340015481166	34623	6014046	COVER STRIP R.H.....	1
					UOC:TTA,TTT,TT1	
* 28	PAOZZ	5310000614650	81349	M45913/3-4CG8C	NUT,SELF-LOCKING,HE 1/4-20.....	12
					UOC:TTA,TTT,TT1	
* 29	PAOZZ	5325014110066	78276	ALS4-1024-130	INSERT,SCREW THREAD .190-24.....	6
					UOC:TTA,TTT,TT1	
* 30	PAOZZ	5305000680508	80204	B1821BH025C075N	SCREW,CAP,HEXAGON H 1/4-20 X 3/4...	8
					UOC:TTA,TTT,TT1	
* 31	PAOZZ	5325014704624	34623	5939712	INSERT,SCREW THREAD.....	10
					UOC:TTA,TTT,TT1	

END OF FIGURE

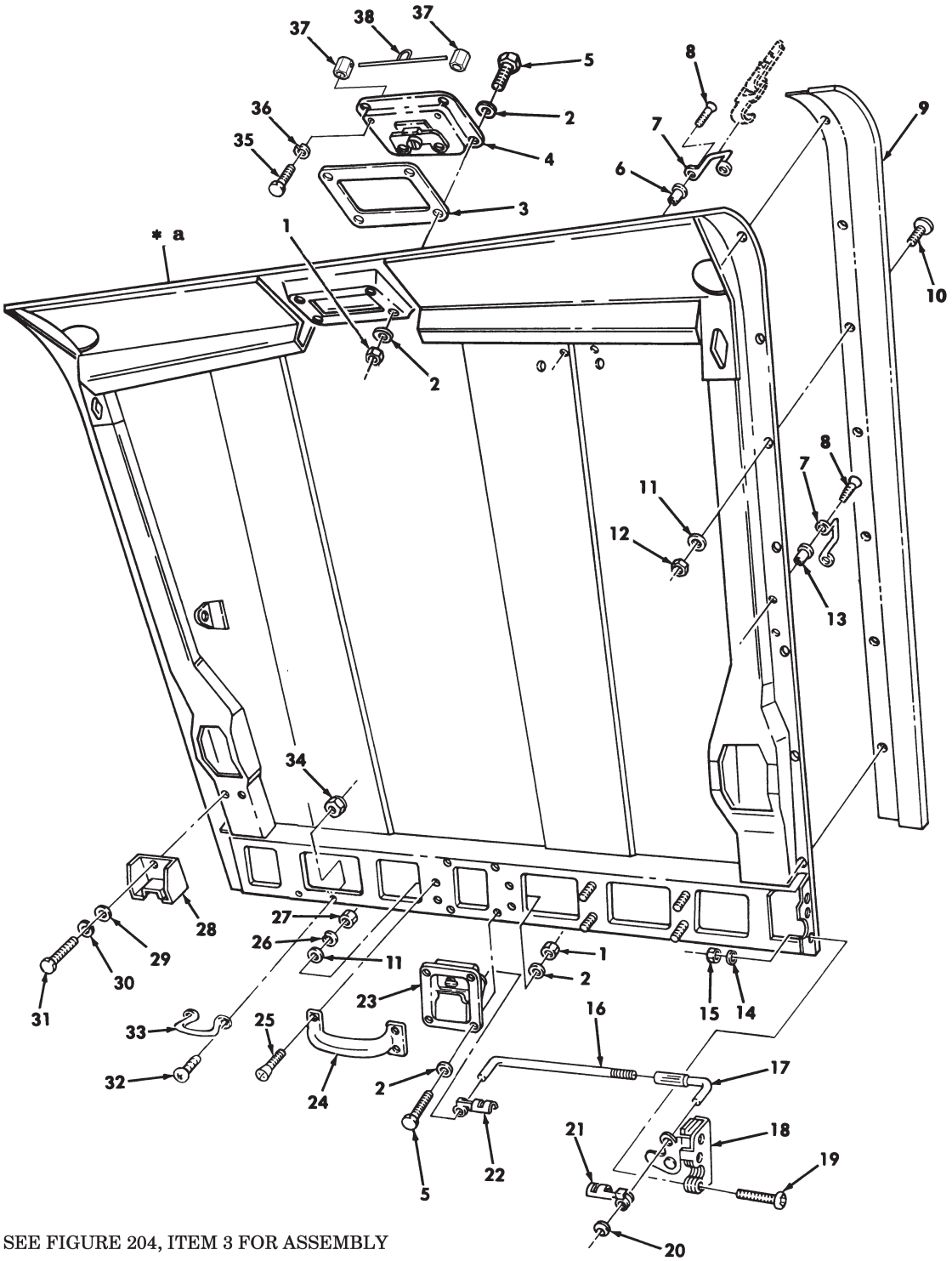

*** a** SEE FIGURE 204, ITEM 3 FOR ASSEMBLY

Figure 205. Cargo Shell Door Assembly.

(1) ITEM NO	(2) SMR CODE	(3) NSN	(4) CAGEC	(5) PART NUMBER	(6) DESCRIPTION AND USABLE ON CODES(UOC)	(7) QTY
					GROUP 1801 BODY,CAB,HOOD AND HULL ASSEMBLY	
					FIG. 205 CARGO SHELL DOOR ASSEMBLY	
1	PAOZZ	5310009349758	96906	MS35649-202	NUT,PLAIN HEXAGON #10-24..... UOC:XBB	8
2	PAOZZ	5310012349416	96906	MS51412-2	WASHER,FLAT #10..... UOC:XBB	16
3	PAOZZ	5330014583810	19207	12341348	GASKET..... UOC:XBB	1
4	PAOZZ	5340011971238	19220	1-5073-U	CATCH,FLUSH..... UOC:XBB	1
5	PAOZZ	5305011858674	7X677	9421294	SCREW,CAP,HEXAGON H #10-24 X 1/2... UOC:XBB	8
6	PAOZZ	5320014110066	78276	ALS4-1024-130	INSERT,SCREW THREAD..... UOC:XBB	28
* 7	PAOZZ	5340013145957	19207	12338839-1	LOOP,STRAP FASTENER..... UOC:XBB	12
8	PAOZZ	5305014108386	24617	156966	SCREW,MACHINE..... UOC:XBB	28
9	PFOZZ	2540011924504	19207	12339646-1	SHIELD,DEFLECTOR,MI L.H..... UOC:XBB	1
9	PFOZZ	2540011929721	19207	12339646-2	SHIELD,DEFLECTOR,MI R.H..... UOC:XBB	1
10	PAOZZ	5305000680502	96906	MS90725-6	SCREW,CAP,HEXAGON H 1/4-20 X 3/4... UOC:XBB	26
11	PAOZZ	5310011023270	24617	2436161	WASHER,FLAT 1/4..... UOC:XBB	30
* 12	PAOZZ	5310000614650	96906	M45913/3-4CG8C	NUT,SELF-LOCKING 1/4-20..... UOC:XBB	26
* 13	PAOZZ	5325014759697	78276	ALS4-1024-225	INSERT,SCREW THREAD..... UOC:XBB	2
* 14	PAOZZ	5310004079566	80205	MS35338-45	WASHER,LOCK 5/16..... UOC:XBB	12
15	PAOZZ	5310009318167	96906	MS51967-6	NUT,PLAIN HEXAGON 5/16-18..... UOC:XBB	12
16	PAOZZ	5306011950277	34623	5583141	BOLT,HOOK..... UOC:XBB	4
17	PAOZZ	5340011972736	19220	16386(75)	ROD END,THREADED..... UOC:XBB	4
* 18	PAOZZ	5340011996103	19207	12339880-2	PLATE,MOUNTING L.H..... UOC:XBB	2
18	PAOZZ	5340011985455	19200	3-400-L (25)	LATCH,DOOR L.H..... UOC:XBB	2
19	PAOZZ	5305002264831	80204	B1821BH031C150N	SCREW,CAP,HEXAGON H 5/16-18 X 1.50. UOC:XBB	12
20	PAOZZ	5310001211333	78553	C183-012-4	PUSH ON NUT..... UOC:XBB	8
21	PAOZZ	5340011958837	78947	HS49745	CLIP,RETAINING R.H..... UOC:XBB	4
* 22	PAOZZ	5340011968158	19207	12340003	CLIP-CLEVIS,ROD RET L.H..... UOC:XBB	4

(1) ITEM NO	(2) SMR CODE	(3) NSN	(4) CAGEC	(5) PART NUMBER	(6) DESCRIPTION AND USABLE ON CODES(UOC)	(7) QTY
23	PAOZZ	5340012598600	19220	34-4974-51X	CATCH,FLUSH..... UOC:XBB	1
24	PFOZZ	5340011978239	14557	U-6236	HANDLE,BOW..... UOC:XBB	1
25	PAOZZ	5305012542453	34623	5592861	SCREW,MACHINE #12-24 X 3/4..... UOC:XBB	4
26	PAOZZ	5310002857037	96906	MS122031	WASHER,LOCK..... UOC:XBB	4
* 27	PAOZZ	5310000121743	16764	121743	NUT,PLAIN,HEXAGON H #12-24..... UOC:XBB	4
28	PAOZZ	5342011945806	19207	12339579	BRACKET,DOVETAIL..... UOC:XBB	1
29	PAOZZ	5310008094058	96906	MS27183-10	WASHER,FLAT 1/4..... UOC:XBB	2
30	PAOZZ	5310005501130	96906	MS35333-40	WASHER,LOCK..... UOC:XBB	2
31	PAOZZ	5305000680508	80204	B1821BH025C075N	SCREW,CAP,HEXAGON H 1/4-20 X 3/4... UOC:XBB	2
32	PAOZZ	5305014652817	6W728	4397063-072	SCREW,MACHINE #10-32 X 1/2..... UOC:XBB	2
33	PAOZZ	5340014341809	19207	12338839-3	STRAP,RETAINING..... UOC:XBB	1
34	PAOZZ	5325014203005	78276	ALS7-1032-130	INSERT,SCREW THREAD #10-32..... UOC:XBB	2
* 35	PAOZZ	5305008215492	80204	B1821BH038C063N	SCREW,CAP,HEXAGON.H 3/8-16 X 5/8... UOC:XBB	2
* 36	PAOZZ	5310014177273	6W728	4397004-008	WASHER,LOCK..... UOC:XBB	2
* 37	PAOZZ		6W728	1000431	POST,HEX MOUNTING..... UOC:XBB	2
* 38	PAOZZ		6W728	1000430	ROD,WELDMENT CARGO LATCH..... UOC:XBB	1

END OF FIGURE

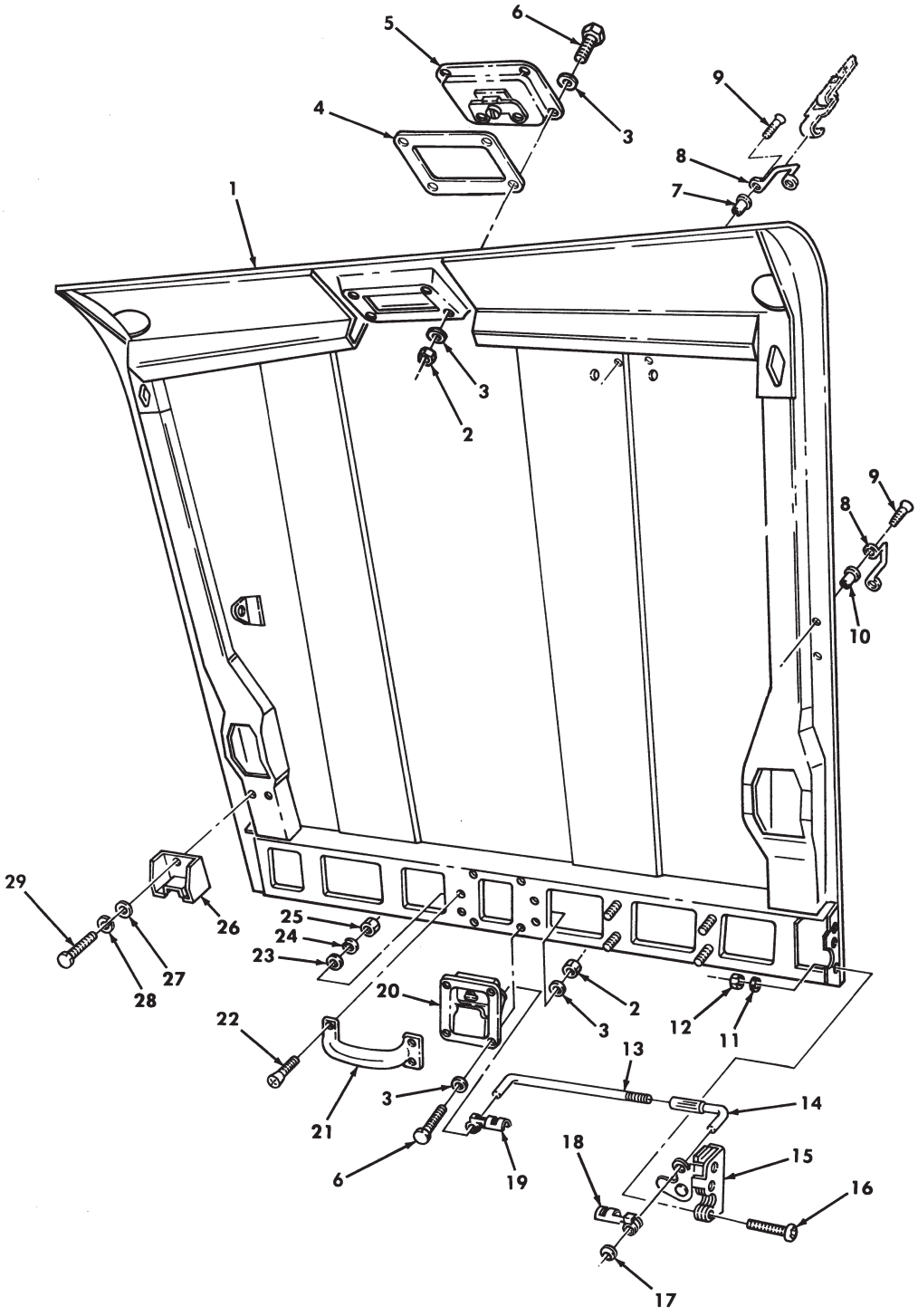

Figure 205A. Cargo Shell Door Assembly, Basic and Supplemental Armor.

(1) ITEM NO	(2) SMR CODE	(3) NSN	(4) CAGEC	(5) PART NUMBER	(6) DESCRIPTION AND USABLE ON CODES(UOC)	(7) QTY
					GROUP 1801 BODY,CAB,HOOD,AND HULL ASSEMBLY	
					FIG. 205A CARGO SHELL DOOR ASSEMBLY, BASIC AND SUPPLEMENTAL ARMOR	
* 1	PAOOO		19207	12446908	DOOR ASSEMBLY..... UOC:TTT	1
* 2	PAOZZ	5310009349758	80205	MS35649-202	NUT,PLAIN,HEXAGON..... UOC:TTT	8
* 3	PAOZZ	5310012349416	96906	MS51412-2	WASHER,FLAT #10..... UOC:TTT	16
* 4	PAOZZ	5330014583810	19207	12341348	GASKET..... UOC:TTT	1
* 5	PAOZZ	5340011971238	19220	1-5073-U	CATCH,FLUSH..... UOC:TTT	1
* 6	PAOZZ	5305011858674	7X677	9421294	SCREW,CAP,HEXAGON H #10-24 X 1/2... UOC:TTT	8
* 7	PAOZZ	5325014110066	78276	ALS4-1024-130	INSERT,SCREW THREAD..... UOC:TTT	38
* 8	PAOZZ	5340004895684	19220	6411B	LOOP,STRAP FASTENER..... UOC:TTT	20
* 9	PAOZZ	5305014108386	24617	156966	SCREW,MACHINE..... UOC:TTT	40
* 10	PAOZZ	5325014759697	78276	ALS4-1024-225	INSERT,SCREW THREAD..... UOC:TTT	2
* 11	PAOZZ	5310004079566	80205	MS35338-45	WASHER,LOCK 5/16..... UOC:TTT	12
* 12	PAOZZ	5310008140673	96906	MS51943-33	NUT,SELF-LOCKING 5/16-18..... UOC:TTT	12
* 13	PAOZZ	5306011950277	34623	5583141	BOLT,HOOK..... UOC:TTT	4
* 14	PAOZZ	5340011972736	19220	16386 (75)	ROD,THREADED END..... UOC:TTT	4
* 15	PAOZZ	5340011996103	19207	12339880-2	LATCH,DOOR R.H.,FRONT AND L.H. REAR. UOC:TTT	2
* 15	PAOZZ	5340011985455	19220	3-400-L (25)	PLATE,MOUNTING DOOR LATCH,L.H., FRONT AND R.H.,REAR..... UOC:TTT	2
* 16	PAOZZ	5305002264831	80204	B1821BH031C150N	SCREW,CAP,HEXAGON H 5/16-18 X 1.50. UOC:TTT	12
* 17	PAOZZ	5310012131333	78553	C183-012-4	PUSH ON NUT..... UOC:TTT	8
* 18	PAOZZ	5340011958837	0ZJZ0	HS-49745	CLIP,RETAINING R.H..... UOC:TTT	4
* 19	PAOZZ	5340011968158	19207	12340003	CLIP-CLEVIS R.H..... UOC:TTT	4
* 20	PAOZZ	5340012598600	19220	34-4974-51X	CATCH,FLUSH..... UOC:TTT	1
* 21	PAOZZ	5340011978239	14557	U-6236	HANDLE,BOW FRONT..... UOC:TTT	1
* 22	PAOZZ	5305012542453	34623	5592861	SCREW,MACHINE #12-24 X 3/4..... UOC:TTT	4

(1) ITEM NO	(2) SMR CODE	(3) NSN	(4) CAGEC	(5) PART NUMBER	(6) DESCRIPTION AND USABLE ON CODES(UOC)	(7) QTY
* 23	PAOZZ	5310011023270	24617	2436161	WASHER,FLAT 1/4..... UOC:TTT	4
* 24	PAOZZ	5310002857037	96906	MS122031	WASHER,LOCK #12..... UOC:TTT	4
* 25	PAOZZ	5310000121743	16764	121743	NUT,PLAIN,HEXAGON #12-24..... UOC:TTT	4
* 26	PAOZZ	5342011945806	19207	12339579	BRACKET,DOVETAIL..... UOC:TTT	1
* 27	PAOZZ	5310008094058	96906	MS27183-10	WASHER,FLAT 1/4..... UOC:TTT	2
* 28	PAOZZ	5310005501130	80205	MS35333-40	WASHER,LOCK 1/4..... UOC:TTT	2
* 29	PAOZZ	5305000680508	80204	B1821BH025C075N	SCREW,CAP,HEXAGON H 1/4-20 X 3/4... UOC:TTT	2

END OF FIGURE

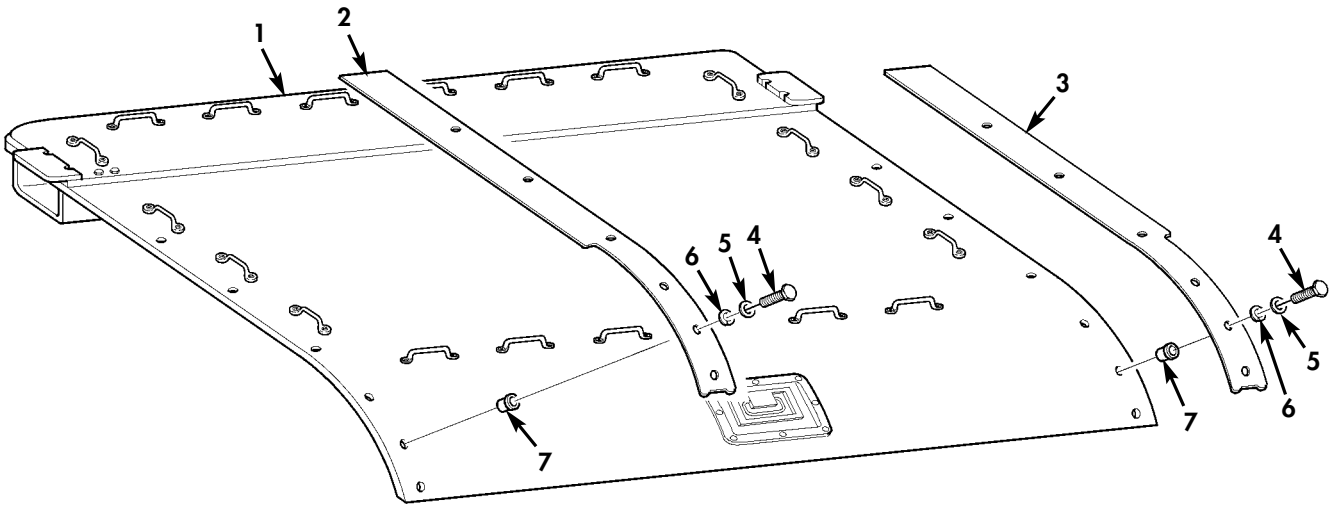

Figure 205B. Cargo Door Blast Shields.

(1) ITEM NO	(2) SMR CODE	(3) NSN	(4) CAGEC	(5) PART NUMBER	(6) DESCRIPTION AND USABLE ON CODES(UOC)	(7) QTY
					GROUP 1801 BODY,CAB,HOOD,AND HULL ASSEMBLY	
					FIG. 205B CARGO DOOR BLAST SHIELDS	
* 1	PAOZZ	2510015739506	19207	12518423	CARGO DOOR..... UOC:TT1	1
* 2	PAOZZ		19207	12518419	SHIELD,BLAST L.H..... UOC:TT1	1
* 3	PAOZZ		19207	12518418	SHIELD,BLAST R.H..... UOC:TT1	1
* 4	PAOZZ	5305002253843	80204	B1821BH025C100N	SCREW,CAP,HEXAGON H 1/4-20 X 1.00... UOC:TT1	12
* 5	PAOZZ	5310005825965	80205	MS35338-44	WASHER,LOCK 1/4..... UOC:TT1	12
* 6	PAOZZ	5310011023270	24617	2436161	WASHER,FLAT 1/4..... UOC:TT1	12
* 7	PAOZZ		78276	AKS9-420-260	INSERT,SCREW THREAD 1/4-20..... UOC:TT1	12

END OF FIGURE

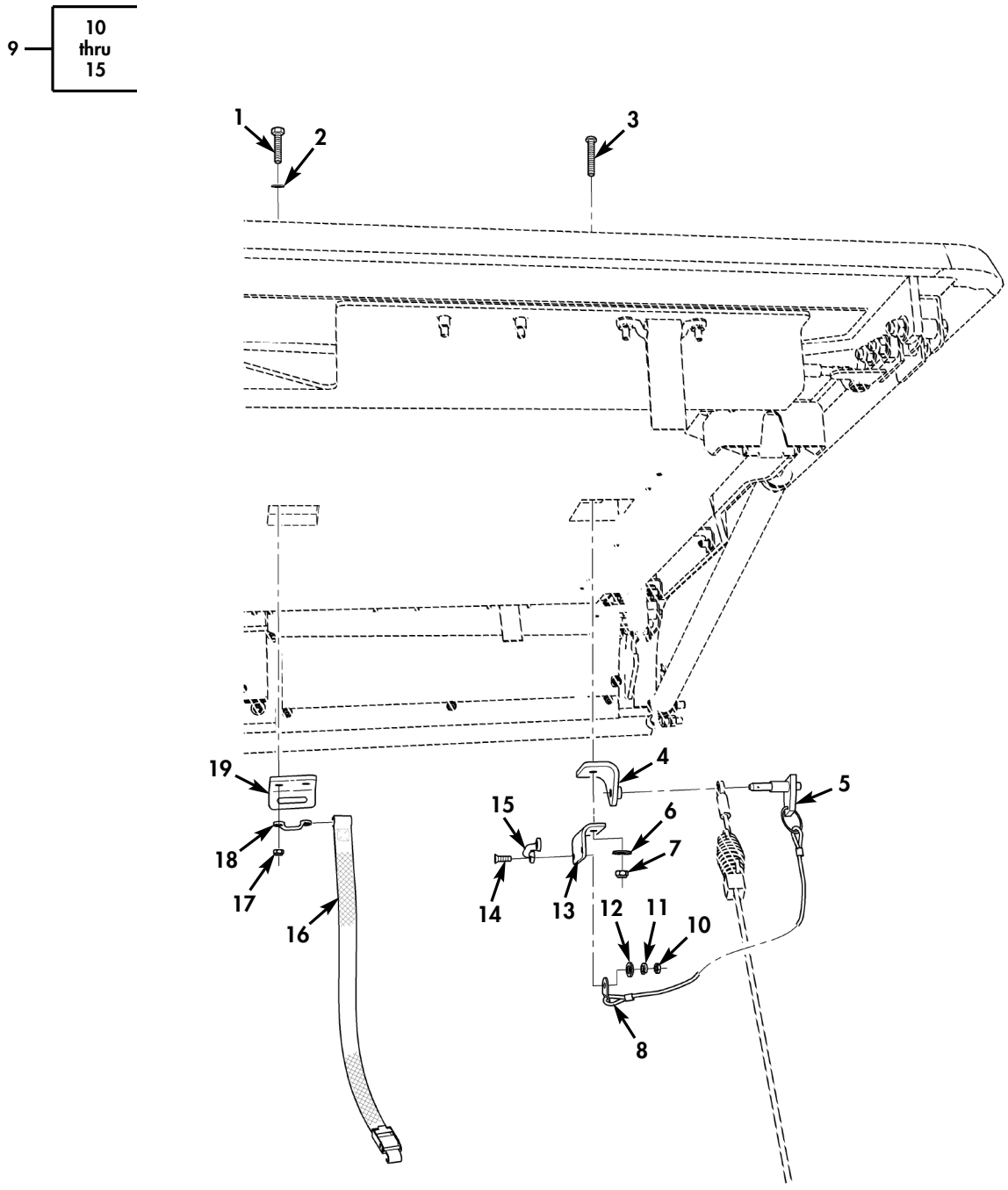

Figure 205C. Cargo Door Strap.

(1) ITEM NO	(2) SMR CODE	(3) NSN	(4) CAGEC	(5) PART NUMBER	(6) DESCRIPTION AND USABLE ON CODES(UOC)	(7) QTY
					GROUP 1801 BODY,CAB,HOOD,AND HULL ASSEMBLY	
					FIG. 205C CARGO DOOR STRAP	
* 1	PAOZZ		05047	AES18C190A00BB3A 91	SCREW,MACHINE 10-24 X 7/8..... UOC:TT1	2
* 2	PAOZZ	5310000120391	24617	120391	WASHER,FLAT #10..... UOC:TT1	2
* 3	PAOZZ	5305015708582	05047	AES18C250A50BB3A 91	SCREW,MACHINE 1/4-20 x 1 3/8..... UOC:TT1	1
* 4	PAOZZ	2590015717308	19207	12480625	BRACKET L.H..... UOC:TT1	1
* 4	PAOZZ		19207	12518421	BRACKET R.H..... UOC:TT1	1
* 5	PAOZZ	5315009450548	80205	NASM17986C506	PIN,QUICK RELEASE..... UOC:TT1	1
* 6	PAOZZ	5310014650709	19207	12387279-52	WASHER,FLAT 1/4..... UOC:TT1	1
* 7	PAOZZ	5310015481269	81349	M45913/4-4CG8Z	NUT,SELF-LOCKING,HE 1/4-20..... UOC:TT1	1
* 8	PAOZZ	4010014660849	19207	12342287	WIRE ROPE ASSEMBLY..... UOC:TT1	1
* 9	AOOOO		19207	12518425	BRACKET ASSY, CARGO..... UOC:TT1	1
* 10	PAOZZ	5310009349758	80205	MS35649-202	.NUT,PLAIN,HEXAGON 10-24..... UOC:TT1	2
* 11	PAOZZ	5310000453296	80205	MS35338-43	.WASHER,LOCK #10..... UOC:TT1	2
* 12	PAOZZ	5310000120391	24617	120391	.WASHER,FLAT 10-24..... UOC:TT1	2
* 13	PAOZZ	5340015708969	19207	12518417	.BRACKET,ANGLE..... UOC:TT1	1
* 14	PAOZZ	5305009576269	05047	ASME B18.6.3	.SCREW,MACHINE 10-24 X 1..... UOC:TT1	2
* 15	PAOZZ	5340013145957	19207	12338839-1	.LOOP,STRAP FASTENER..... UOC:TT1	1
* 16	PAOZZ	5340012758568	31272	45410-21	STRAP,WEBBING..... UOC:TT1	1
* 17	PAOZZ	5310009349758	80205	MS35649-202	NUT,PLAIN,HEXAGON 10-24..... UOC:TT1	2
* 18	PAOZZ	5340013145957	19207	12338839-1	LOOP,STRAP FASTENER..... UOC:TT1	1
* 19	PAOZZ	5340015739619	19207	12518420	BRACKET,MOUNTING..... UOC:TT1	1

END OF FIGURE

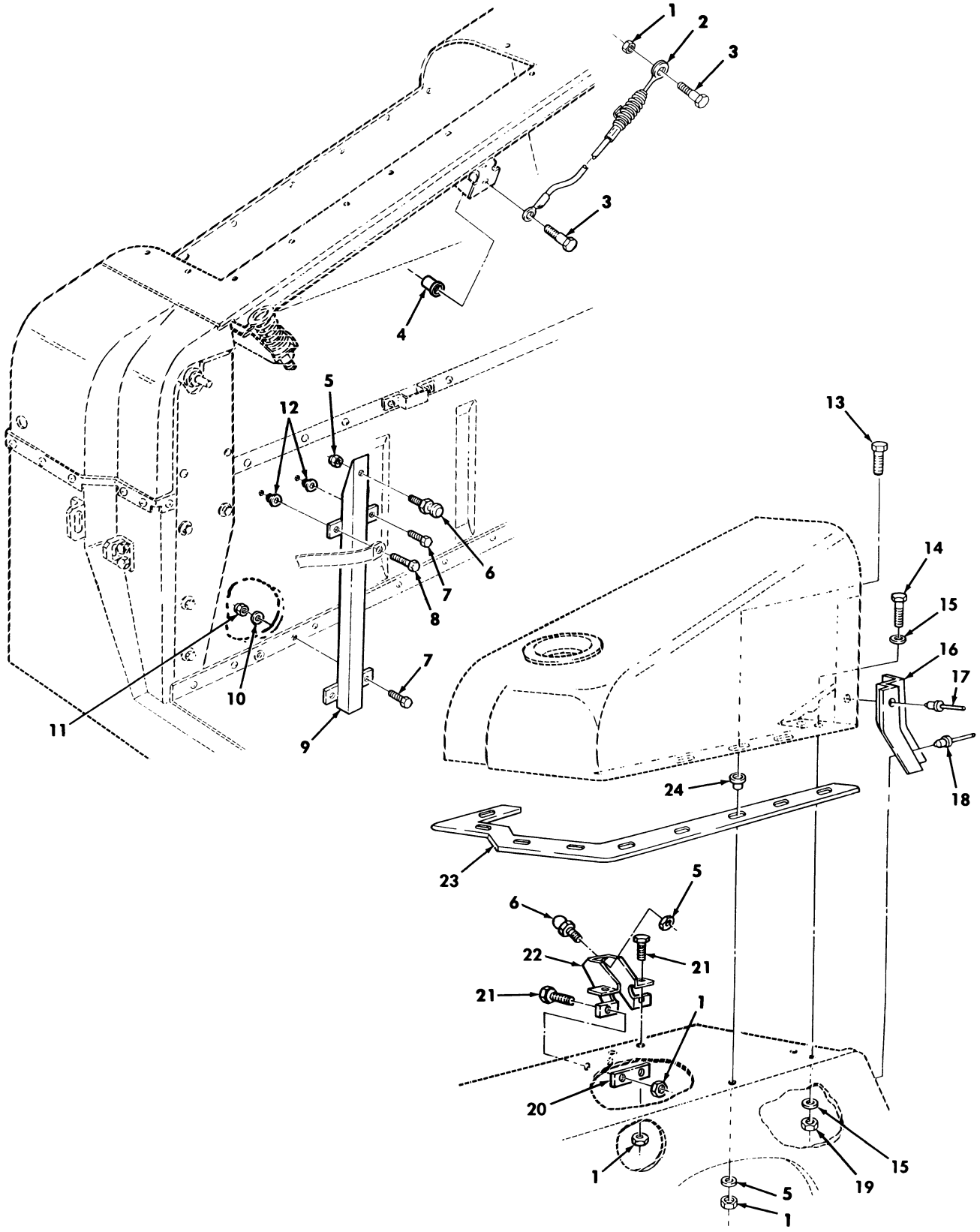

Figure 206. Cargo Shell Mounting Components.

(1) ITEM NO	(2) SMR CODE	(3) NSN	(4) CAGEC	(5) PART NUMBER	(6) DESCRIPTION AND USABLE ON CODES(UOC)	(7) QTY
					GROUP 1801 BODY,CAB,HOOD,AND HULL ASSEMBLY	
					FIG. 206 CARGO SHELL MOUNTING COMPONENTS	
* 1	PAOZZ	5310000614650	96906	M45913/3-4CG8C	NUT,SELF-LOCKING,HE 1/4-20..... UOC:XBB	25
2	PAOZZ	4010012030412	34623	5594524	WIRE ROPE ASSEMBLY,..... UOC:XBB	2
3	PAOZZ	5306011991314	19207	12340001-2	BOLT,SHOULDER 1/4-20 X 3/4..... UOC:XBB	4
4	PAOZZ		6W728	4668901-001	FASTENER,RIVNUT..... UOC:XBB	1
5	PAOZZ	5310008140673	96906	MS51943-33	NUT,SELF-LOCKING,HE 5/16-18..... UOC:XBB	20
6	PAOZZ	5307014493769	19207	12339609	STUD,BALL..... UOC:XBB	2
7	PAOZZ	5305014366379	6W728	4397000-008	SCREW,MACHINE 1/4-20 X 1.00..... UOC:XBB	3
8	PAOZZ	5306014365392	6W728	4397000-010	BOLT,MACHINE 1/4-20 X 1.25..... UOC:XBB	1
9	PAOZZ	5340014733280	6W728	4660966-002	BRACKET,MOUNTING..... UOC:XBB	1
10	PAOZZ	5310014357784	6W728	4397005-010	WASHER,FLAT 9/32..... UOC:XBB	2
11	PAOZZ	5310014398173	6W728	4397064-001	NUT,SELF-LOCKING,HE 1/4-20..... UOC:XBB	2
12	PAOZZ	5325013942414	78276	ALS7-420-165	INSERT,SCREW THREAD..... UOC:XBB	2
13	PAOZZ	5305002253843	80204	B1821BH025C100N	SCREW,CAP HEXAGON H 1/4-20 X 1.00.. UOC:XBB	18
14	PAOZZ	5305007252317	80204	B1821BH038C150N	SCREW,CAP,HEXAGON H 3/8-16 X 1.50.. UOC:XBB	2
15	PAOZZ	5310014124013	24617	2436163	WASHER,FLAT 3/8..... UOC:XBB	4
16	PFFZZ	2540011928283	34623	5584152	PANEL,FILLER DOOR S R.H.,REAR..... UOC:XBB	1
16	PFFZZ	2510011925950	34623	5584151	PANEL,CAB L.H.,REAR..... UOC:XBB	1
17	PAFZZ	5320008990981	54402	AD42BS	RIVET,BLIND 1/8 DIA..... UOC:XBB	1
18	PAFZZ	5320000835009	81349	M24243/1-A403	RIVET,BLIND 1/8 DIA..... UOC:XBB	4
19	PAOZZ	5310009359021	96906	MS51943-35	NUT,SELF-LOCKING,HE 3/8-16..... UOC:XBB	2
22	PFOZZ	5340011972642	19207	12339605	PLATE,MENDING..... UOC:XBB	2
21	PAOZZ	5305000680508	80204	B1821BH025C075N	SCREW,CAP HEXAGON H 1/4-20 X 3/4... UOC:XBB	8
* 22	PFOZZ	5340011972716	19207	12339611	BRACKET,MOUNTING..... UOC:XBB	2
23	PAOZZ	5330012390659	34623	5593931	SEAL,NONMETALLIC R.H.....	1

(1) ITEM NO	(2) SMR CODE	(3) NSN	(4) CAGEC	(5) PART NUMBER	(6) DESCRIPTION AND USABLE ON CODES(UOC)	(7) QTY
					UOC:XBB	
* 23	PAOZZ	5330011959049	19207	12339616-1	SEAL,NONMETALLIC L.H.....	1
					UOC:XBB	
24	PAOZZ	5365011945093	34623	5583135	SPACER,SLEEVE.....	18
					UOC:XBB	

END OF FIGURE

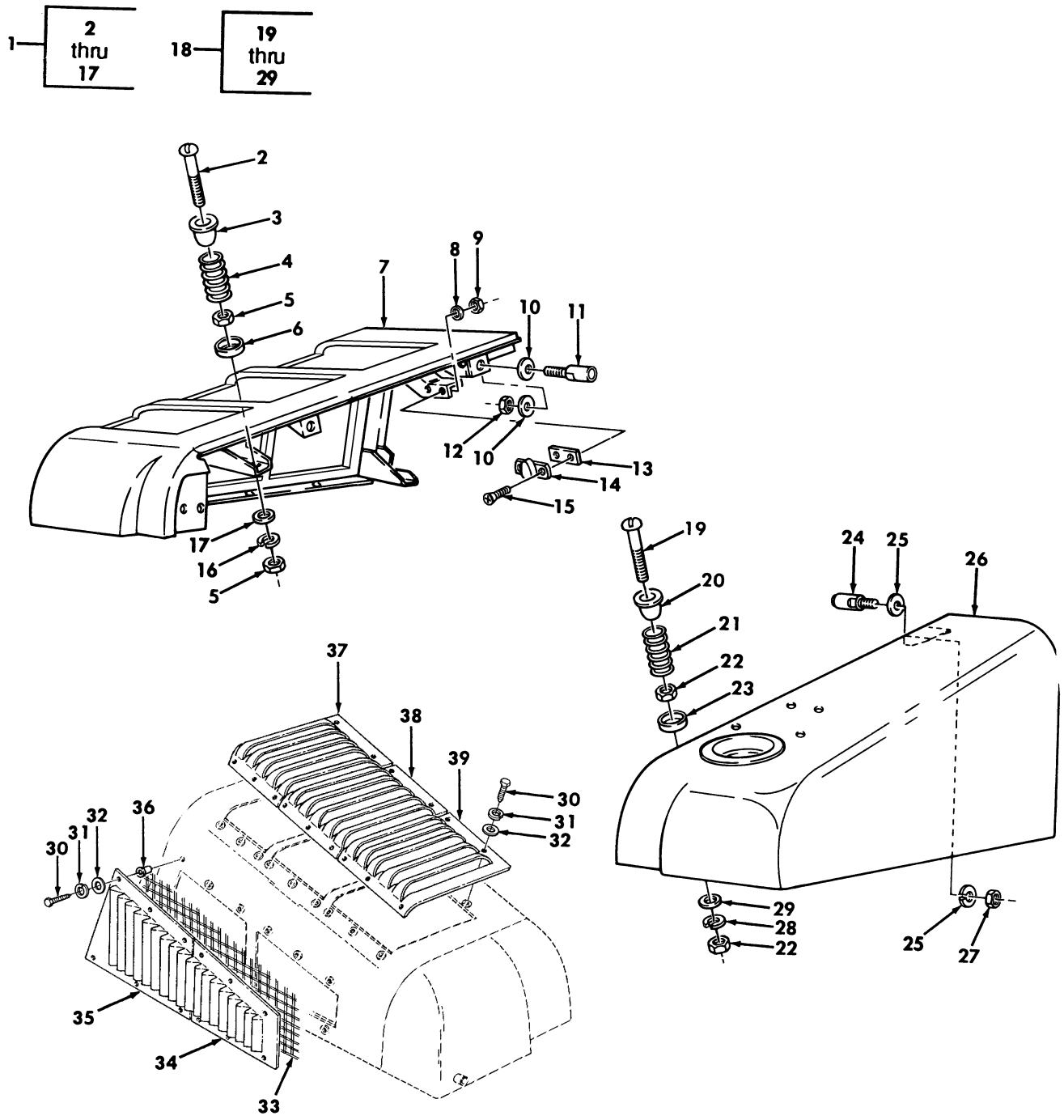

Figure 207. Cargo Shell Assemblies.

(1) ITEM NO	(2) SMR CODE	(3) NSN	(4) CAGEC	(5) PART NUMBER	(6) DESCRIPTION AND USABLE ON CODES(UOC)	(7) QTY
					GROUP 1801 BODY,CAB,HOOD,AND HULL ASSEMBLY	
					FIG. 207 CARGO SHELL ASSEMBLIES, AND CONDENSER FAN EXHAUST AND SUPPLY VENTS	
* 1	PFFFF	2510014346191	6W728	1000226	SHELL,CARGO ASSEMBL BASIC ARMOR L.H..... UOC:XBB	1
2	PAOZZ	5305011971594	19207	12339548	.SCREW,MACHINE 1/2-20 X 3.00..... UOC:XBB	1
3	PAOZZ	2540012096049	19207	12339546	.RETAINER,HELICAL CO..... UOC:XBB	1
4	PAOZZ	5360011946070	19207	12339547	.SPRING,HELICAL,COMP..... UOC:XBB	1
5	PAOZZ	5310004093333	96906	MS51943-45	.NUT,SELF-LOCKING,HE 1/2-20..... UOC:XBB	2
6	PAOZZ	5340012144992	19207	12339545	.RETAINER,HELICAL CO..... UOC:XBB	1
* 7	XAFZZ		19207	12469212	.CARGO SHELL L.H..... UOC:XBB	1
8	PAOZZ	5310014357784	6W728	4397005-010	.WASHER,FLAT .281..... UOC:XBB	2
9	PAOZZ	5310014398173	6W728	4397064-001	.NUT,SELF-LOCKING,HE .250-20..... UOC:XBB	2
10	PAOZZ	5310008094085	96906	MS27183-16	.WASHER,FLAT 7/16..... UOC:XBB	2
11	PAOZZ	5315012896212	19207	12339544	.PIN,SHOULDER,HEADLE..... UOC:XBB	1
12	PAOZZ	5310011504003	24617	9422299	.NUT,SELF-LOCKING,HE 7/16-14..... UOC:XBB	1
13	PAOZZ	5365011290399	19207	7529300	.SPACER,PLATE..... UOC:XBB	1
14	PAOZZ	2540000402129	19207	8329899	.WEDGE,DOOR DOVETAIL..... UOC:XBB	1
* 15	PAOZZ	5305000680588	80204	B1821BH025C075N	.SCREW,CAP HEXAGON H .250-20 X .750 UOC:XBB	2
16	PAOZZ	5310005845272	02978	ERNA245	.WASHER,LOCK 1/2..... UOC:XBB	1
17	PAOZZ	5310011211703	11862	2436165	.WASHER,FLAT 1/2..... UOC:XBB	1
* 18	PFFFF	2510014734043	19207	12469210-2	SHELL,CARGO,ASSY BASIC ARMOR R.H... UOC:XBB	1
19	PAOZZ	5305011971594	19207	12339548	.SCREW,MACHINE 1/2-20 X 3.00..... UOC:XBB	1
20	PAOZZ	2540012096049	19207	12339546	.RETAINER,HELICAL CO..... UOC:XBB	1
21	PAOZZ	5360011946070	19207	12339547	.SPRING,HELICAL,COMP..... UOC:XBB	1
22	PAOZZ	5310004093333	96906	MS51943-45	.NUT,SELF-LOCKING,HE 1/4-20..... UOC:XBB	2
23	PAOZZ	5340012144992	19207	12339545	.RETAINER,HELICAL CO.....	1

(1) ITEM NO	(2) SMR CODE	(3) NSN	(4) CAGEC	(5) PART NUMBER	(6) DESCRIPTION AND USABLE ON CODES(UOC)	(7) QTY
					UOC:XBB	
24	PAOZZ	5315012896212	19207	12339544	.PIN,SHOULDER,HEADLE FRONT.....	1
					UOC:XBB	
25	PAOZZ	5310008094085	96906	MS27183-16	.WASHER,FLAT 7/16.....	2
					UOC:XBB	
* 26	XAFZZ		19207	12469211	.SHELL,CARGO.....	1
					UOC:XBB	
27	PAOZZ	5310011504003	24617	9422299	.NUT,SELF-LOCKING,HE 4/16-14.....	1
					UOC:XBB	
28	PAOZZ	5310005845272	02978	ERNA245	.WASHER,LOCK 1/2.....	1
					UOC:XBB	
29	PAOZZ	5310011211703	24617	2436165	.WASHER,FLAT 1/2.....	1
					UOC:XBB	
* 30	PAFZZ		6W728	4397051-033	SCREW,MACHINE.....	27
					UOC:XBB	
* 31	PAFZZ	5310014341385	6W728	4397004-005	WASHER,LOCK.....	27
					UOC:XBB	
* 32	PAFZZ	5310014777333	6W728	4397005-008	WASHER,FLAT.....	27
					UOC:XBB	
* 33	PAFZZ	2510014599499	6W728	55-04063	SCREEEN,AIR CONDITIO.....	1
					UOC:XBB	
* 34	PAFZZ	2540014602448	6W728	17-0005	VENTILATOR,AIR CIRC SIDE.....	1
					UOC:XBB	
* 35	PAFZZ	2540014602451	6W728	17-0004	VENTILATOR,AIR CIRC SIDE.....	1
					UOC:XBB	
* 36	PAFZZ	5325014203005	78726	ALS7-1032-130	INSERT,SCREW THREAD.....	27
					UOC:XBB	
* 37	PAFZZ	2540014602450	6W728	17-00001	VENTILATOR,AIR CIRC TOP FRONT.....	1
					UPC:XBB	
* 38	PAFZZ	2540014602434	6W728	17-00002	VENTILATOR,AIR CIRC TOP CENTER.....	1
					UOC:XBB	
* 39	PAFZZ	2540014602437	6W728	17-00003	VENTILATOR,AIR CIRC TOP REAR.....	1
					UOC:XBB	

END OF FIGURE

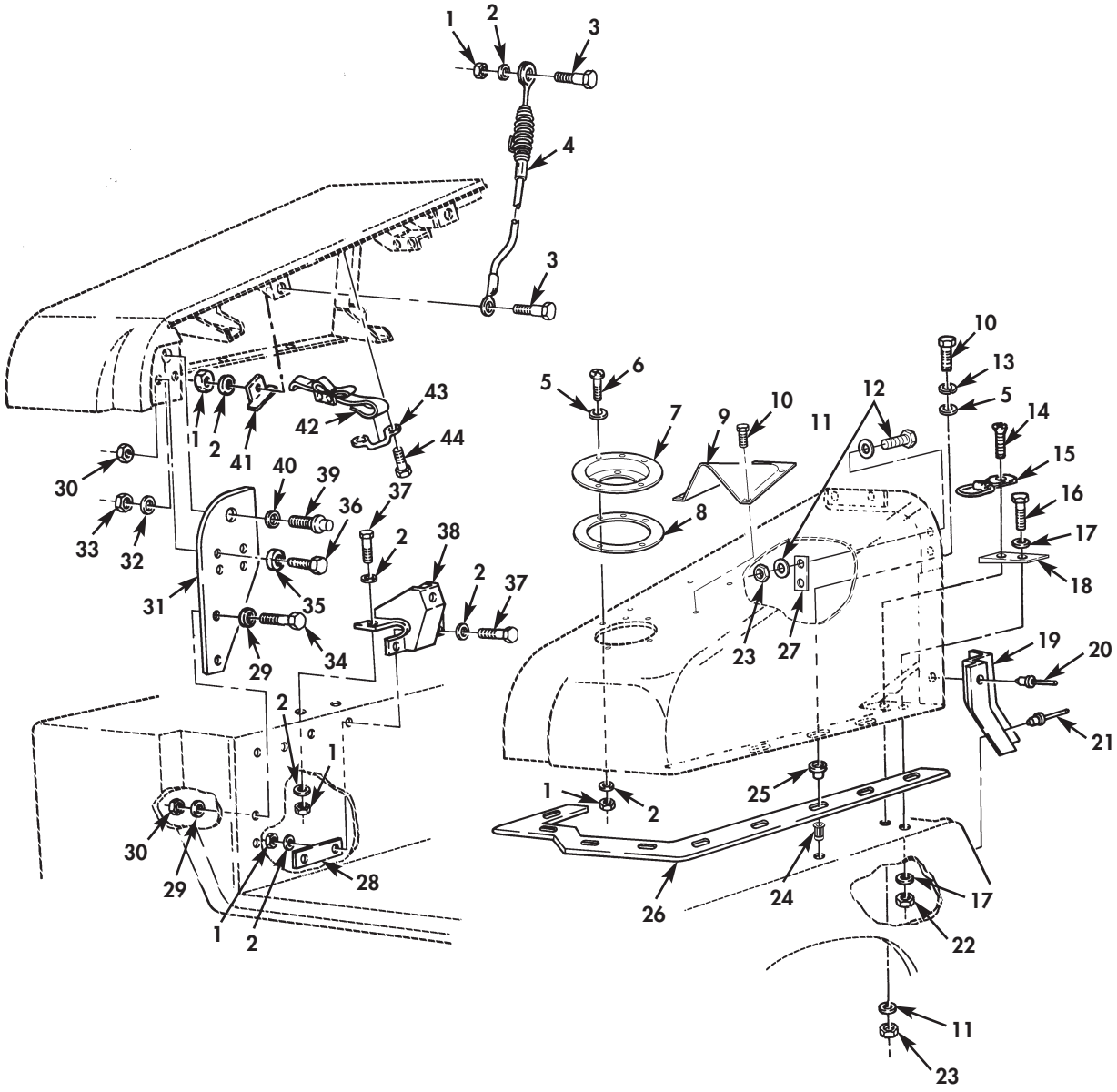

Figure 207A. Cargo Shell Assemblies.

(1) ITEM NO	(2) SMR CODE	(3) NSN	(4) CAGEC	(5) PART NUMBER	(6) DESCRIPTION AND USABLE ON CODES(UOC)	(7) QTY
					GROUP 1801 BODY,CAB,HOOD,AND HULL ASSEMBLY	
					FIG. 207A CARGO SHELL ASSEMBLIES	
* 1	PAOZZ	5310000614650	96906	M45913/3-4CG8C	NUT,SELF-LOCKING HE 1/4-20..... UOC:TTT	30
* 2	PAOZZ	5310011023270	24617	2436161	WASHER,FLAT 1/4..... UOC:TTT	42
* 3	PAOZZ	5306011991314	19207	12340001-2	BOLT,SHOULDER 1/4-20 X 3/4..... UOC:TTT	4
* 4	PAOZZ	4010012030412	34623	5594524	WIRE ROPE ASSEMBLY..... UOC:TTT	2
* 5	PAOZZ	5310008094058	96906	MS27183-10	WASHER,FLAT 1/4..... UOC:TTT	10
* 6	PAOZZ	5305000712505	80204	B1821BH025C088N	SCREW,CAP,HEXAGOPN H 1/4-20 X 7/8. UOC:TTT	5
* 7	PAOZZ		19207	12339558	MOUNT..... UOC:TTT	1
* 8	PAOZZ		19207	12469270	GASKET..... UOC:TTT	1
* 9	PAOZZ	2590011887394	19207	12339642	SHIELD,TOW..... UOC:TTT	1
* 10	PAOZZ	5305000680509	80204	B1821BH025C125N	SCREW,CAP,HEXAGON H 1/4-20 X 1.25.. UOC:TTT	20
* 11	PAOZZ	5310013968392	80205	NAS1149F0863P	WASHER,FLAT 1/2..... UOC:TTT	18
* 12	PAOZZ	5305000712071	80204	B1821BH050C200N	SCREW,CAP,HEXAGON H 1/2-13 X 2.00.. UOC:TTT	4
* 13	PAOZZ	5310005432410	80205	MS35338-40	WASHER,LOCK 1/4..... UOC: TTT	16
* 14	PAOZZ	5305000522232	96906	MS24667-77	SCREW,CAP,SOCKET HE..... UOC:TTT	2
* 15	PAOZZ	3990014325370	19207	12446987	TIEDOWN,CARGO,VEHICULAR..... UOC:TTT	2
* 16	PAOZZ	5305000712057	80204	B1821BH044C200N	SCREW,CAP,HEXAGON H 7/16-14 X 2.00. UOC:TTT	4
* 17	PAOZZ	5310012789555	34623	2436164	WASHER,FLAT 7/16..... UOC:TTT	16
* 18	PAOZZ		34623	6015070	WEDGE,BRACKET..... UOC:TTT	2
* 19	PFFZZ	2540011928283	34623	5584152	PANEL,FILLER DOOR R.H.,REAR..... UOC:TTT	1
* 19	PFFZZ	2510011925950	34623	5584151	PANEL,CAB L.H.,REAR..... UOC:TTT	1
* 20	PAFZZ	5320010195694	78206	4-2ASD	RIVET,BLIND 1/8 DIAMETER..... UOC:TTT	1
* 21	PAFZZ	5320000835009	05693	BSP-43	RIVET,BLIND 1/8 DIAMETER..... UOC:TTT	4
* 22	PAOZZ	5310009353607	96906	MS51988-10	NUT,SELF-LOCKING 7/16..... UOC:TTT	4
* 23	PAOZZ	5310004883889	96906	MS51943-39	NUT,SELF-LOCKING..... UOC:TTT	6

(1) ITEM NO	(2) SMR CODE	(3) NSN	(4) CAGEC	(5) PART NUMBER	(6) DESCRIPTION AND USABLE ON CODES(UOC)	(7) QTY
					UOC:TTT	
* 24	PAOZZ	5310014113422	19207	12446871-2	NUT,PLAIN,BLIND RIV 1/4-20.....	16
					UOC:TTT	
* 25	PAFZZ	5365011945093	34623	5583156	SPACER,SLEEVE.....	16
					UOC:TTT	
* 26	PAFZZ	5330011959049	19207	12339619-1	SEAL,NONMETALLIC.....	2
					UOC:TTT	
* 27	PAOZZ		34623	6019906	PLATE,REINFORCEMENT.....	2
					UOC:TTT	
* 28	PFOZZ	5340011972642	19207	12339605	PLATE,MENDING.....	21
					UOC:TTT	
* 29	PAFZZ	5310000877493	96906	MS27183-13	WASHER,FLAT 3/8.....	24
					UOC:TTT	
* 30	PAFZZ	5310009359021	96906	MS51943-35	NUT,SELF-LOCKING 3/8-16.....	17
					UOC:TTT	
* 31	PFOZZ	2540012523386	34623	12339610-2	PLATE,STRIKER,MOUNT R.H.....	1
					UOC:TTT	
* 31	PFOZZ	2540012528460	19207	12339610-1	PLATE,STRIKER L.H.....	1
					UOC:TTT	
* 32	PAOZZ	5310011474052	23862	2436168	WASHER,FLAT 3/4.....	2
					UOC:TTT	
* 33	PAOZZ	5310004093333	96906	M45913/3-12CG8C	NUT,SELF-LOCKING H 1/4-10.....	2
					UOC:TTT	
* 34	PAOZZ	5305007252317	80204	B1821BH038C150N	SCREW,CAP,HEXAGON H 3/8-16 X 1.50..	10
					UOC:TTT	
* 35	PAOZZ	5310000806004	96906	MS27183-14	WASHER,FLAT 3/8.....	2
					UOC:TTT	
* 36	PAOZZ	5305014491001	19207	12342675	SCREW,CAP,SOCKET HE 3/8-16 X 1.25..	2
					UOC:TTT	
* 37	PAOZZ	5305000680508	80204	B1821BH025C075N	SCREW,CAP,HEXAGON H 1/4-20 X 3/4...	8
					UOC:TTT	
* 38	PFOZZ	5340011972716	19207	12339611	BRACKET,MOUNTING.....	2
					UOC:TTT	
* 39	PAOZZ	5305012542459	34623	5593313	SCREW,ASSEMBLED WAS #10-32 X 3/4...	8
					UOC:TTT	
* 40	PAOZZ	5310011971100	19207	12339599	WASHER,FLAT 25/32.....	2
					UOC:TTT	
* 41	PAOZZ	5340014605002	19207	12339601	BRACKET,ANGLE.....	2
					UOC:TTT	
* 42	PAOZZ	5340012035634	31272	44647-10	STRAP,WEBBING.....	4
					UOC:TTT	
* 43	PAOZZ	5340004895684	19220	6411B	LOOP,STRAP FASTENER.....	4
					UOC:TTT	
* 44	PAOZZ	5340014401435	34623	5596198	STUD,FRICTION CATCH.....	2
					UOC:TTT	

END OF FIGURE

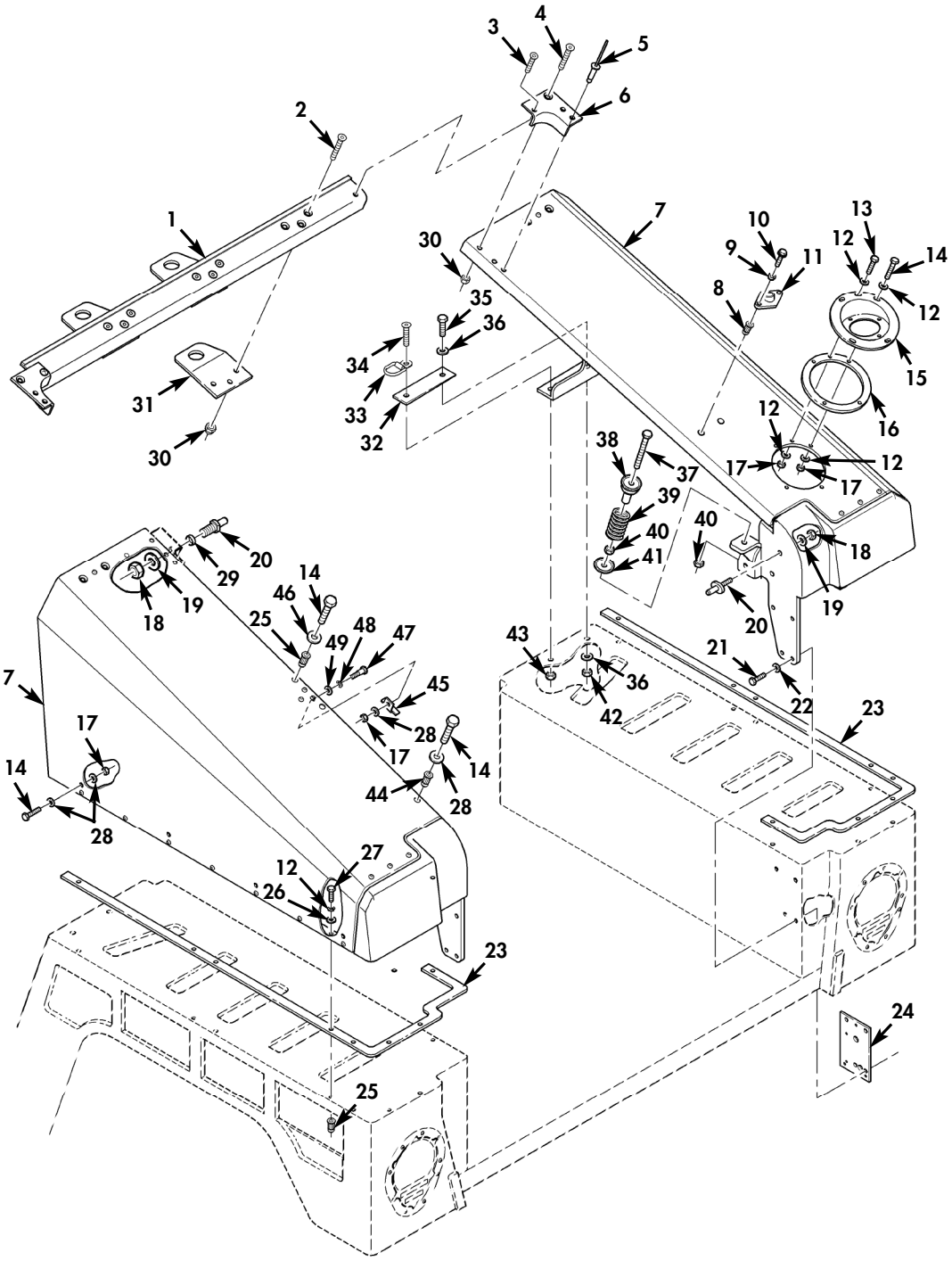

Figure 207B. Aluminium Cargo Shells and Related Parts.

(1) ITEM NO	(2) SMR CODE	(3) NSN	(4) CAGEC	(5) PART NUMBER	(6) DESCRIPTION AND USABLE ON CODES(UOC)	(7) QTY
					GROUP 1801 BODY,CAB,HOOD,AND HULL ASSEMBLY	
					FIG. 207B ALUMINIUM CARGO SHELLS AND RELATED PARTS	
* 1	PAOZZ	5340015484829	34623	6013830	BRACKET,MOUNTING..... UOC:TTA,TTT,TT1	1
* 2	PAOZZ	5305012059158	96906	MS24667-58	SCREW,CAP,SOCKET HE 3/8-16 X 2.50... UOC:TTA,TTT,TT1	9
* 3	PAOZZ	5305013615353	24617	9414241	SCREW,TAPPING 10-32 X 3/8..... UOC:TTA,TTT,TT1	9
* 4	PAOZZ	5305000816730	96906	MS24667-54	SCREW,CAP,SOCKET HE 3/8-16 X 1.50... UOC:TTA,TTT,TT1	6
* 5	PAOZZ	5320013339955	81349	M24243/1A406	RIVET,BLIND..... UOC:TTA,TTT,TT1	4
* 6	PAOZZ	2510015486640	34623	6022980	PANEL,BODY,VEHICULA L.H..... UOC:TTA,TTT,TT1	1
* 6	PAOZZ	2510015486641	34623	6022981	PANLE,BODY,VEHICULA R.H..... UOC:TTA,TTT,TT1	1
* 7	PAOOO	2540015482055	34623	6019334	ARMOR,SUPPLEMENTAL L.H..... UOC:TTA,TTT,TT1	1
* 7	PAOOO	2540015482050	34623	6019336	ARMOR,SUPPLEMENTAL R.H..... UOC:TTA,TTT,TT1	1
* 8	PFOZZ	5325015482809	34623	6002257	INSERT,SCREW THREAD..... UOC:TTA,TTT,TT1	2
* 9	PAOZZ	5310004079566	80205	MS35338-45	WASHER,LOCK 5/16..... UOC:TTA,TTT,TT1	2
* 10	PAOZZ	5306002264827	80204	B1821BH031C100N	BOLT,MACHINE 5/16-18 X 1.00..... UOC:TTA,TTT,TT1	2
* 11	PAOZZ	5340014515903	19207	12460329	PLATE,MOUNTING..... UOC:TTA,TTT,TT1	1
* 12	PAOZZ	5310011668517	89346	120392	WASHER,FLAT 1/4..... UOC:TTA,TTT,TT1	26
* 13	PAOZZ	5305002253842	80204	B1821BH025C113N	SCREW,CAP,HEXAGON H 1/4-20 X 1.125.. UOC:TTA,TTT,TT1	26
* 14	PAOZZ	5305000712505	80204	B1821BH025C088N	SCREW,CAP,HEXAGON H 1/4-20 X 7/8 ... UOC:TTA,TTT,TT1	20
* 15	PAOZZ	9558015481659	19207	12339558	BASE,ANTENNA SUPPOR..... UOC:TTA,TTT,TT1	1
* 16	PAOZZ	5330015483654	19207	12469270	GASKET..... UOC:TTA,TTT,TT1	1
* 17	PAOZZ	5310015481269	81349	M45913/4-4CG8Z	NUT,SELF-LOCKING,HE 1/4-20..... UOC:TTA,TTT,TT1	27
* 18	PAOZZ		81349	M45913/4-12CG8Z	NUT,SELF-LOCKING,HE 3/4-10..... UOC:TTA,TTT,TT1	2
* 19	PAOZZ	5310011474052	7X677	11609642	WASHER,FLAT 3/4..... UOC:TTA,TTT,TT1	2
* 20	PAOZZ	5340014401435	34623	5596198	STUD,FRICTION CATCH..... UOC:TTA,TTT,TT1	2
* 21	PAOZZ	5305007252317	80204	B1821BH038C150N	SCREW,CAP,HEXAGON H 3/8-16 X 1.50... UOC:TTA,TTT,TT1	8
* 22	PAOZZ	5310009871294	19200	10910174-16	WASHER,FLAT 3/8..... UOC:TTA,TTT,TT1	8

(1) ITEM NO	(2) SMR CODE	(3) NSN	(4) CAGEC	(5) PART NUMBER	(6) DESCRIPTION AND USABLE ON CODES(UOC)	(7) QTY
* 23	PAOZZ	5330015480887	34623	6013826	SEAL,NONMETALLIC SP L.H..... UOC:TTA,TTT,TT1	1
* 23	PAOZZ	5330015480890	34623	6013827	SEAL,NONMETALLIC SP R.H..... UOC:TTA,TTT,TT1	1
* 24	PAOZZ	5365015485005	34623	6019892	SPACER,PLATE L.H..... UOC:TTA,TTT,TT1	2
* 24	PAOZZ	5365015480905	34623	6019895	SPACER,PLATE R.H..... UOC:TTA,TTT,TT1	1
* 25	PAOZZ	5325015482516	78276	AKS4-420-260	INSERT,SCREW THREAD..... UOC:TTA,TTT,TT1	15
* 26	PAOZZ	5365015484284	34623	5939596	SPACER,STRAIGHT..... UOC:TTA,TTT,TT1	15
* 27	PAOZZ	5305011012011	96906	MS51849-99	SCREW,MACHINE 1/4-20 X 1.25..... UOC:TTA,TTT,TT1	16
* 28	PAOZZ	5310011023270	24617	2436161	WASHER,FLAT 1/4..... UOC:TTA,TTT,TT1	24
* 29	PAOZZ	5365015482564	34623	6022071	SPACER,SLEEVE..... UOC:TTA,TTT,TT1	2
* 30	PAOZZ	5310009308214	96906	MS51988-7	NUT,SELF-LOCKING,EX 3/8..... UOC:TTA,TTT,TT1	15
* 31	PAOZZ	5340015482874	34623	6014584	BRACKET,MOUNTING..... UOC:TTA,TTT,TT1	3
* 32	PAOZZ	5340015482936	34623	6015070	PLATE,MOUNTING..... UOC:TTA,TTT,TT1	2
* 33	PAOZZ	3990014325370	19207	12446987	TIE DOWN,CARGO,VEHI..... UOC:TTA,TTT,TT1	2
* 34	PAOZZ	5305012619483	96906	MS24667-80	SCREW,CAP,SOCKET HE 1/2-13 X 2.50... UOC:TTA,TTT,TT1	2
* 35	PAOZZ	5305000712057	80204	B1821BH044C200N	SCREW,CAP,HEXAGON H 7/16-14 X 2.00.. UOC:TTA,TTT,TT1	2
* 36	PAOZZ	5310012789555	34623	2436164	WASHER,FLAT 7/16..... UOC:TTA,TTT,TT1	6
* 37	PAOZZ	5305011971594	19207	12339548	SCREW,MACHINE 1/2-20 X 3.00..... UOC:TTA,TTT,TT1	2
* 38	PAOZZ	2540012096049	19207	12339546	RETAINER,HELICAL CO..... UOC:TTA,TTT,TT1	2
* 39	PAOZZ	5360011946070	19207	12339547	SPRING,HELICAL,COMP..... UOC:TTA,TTT,TT1	2
* 40	PAOZZ	5310015680729	81349	M45913/4-8FG8Z	NUT,SELF-LOCKING..... UOC:TTA,TTT,TT1	4
* 41	PAOZZ	5340012144992	19207	12339545	RETAINER,HELICAL CO..... UOC:TTA,TTT,TT1	2
* 42	PAOZZ	5310011504003	24617	9422299	NUT,SELF-LOCKING,HE 7/16-14..... UOC:TTA,TTT,TT1	2
* 43	PAOZZ	5310008493589	96906	MS51988-11	NUT,PLAIN EXTENDED 1/2-13..... UOC:TTA,TTT,TT1	2
* 44	PAOZZ	5310014113422	78276	ALS4-420-165	INSERT,SCREW,THREAD..... UOC:TTA,TTT,TT1	8
* 45	PAOZZ	5340014605002	19207	12339601	BRACKET,ANGLE..... UOC:TTA,TTT,TT1	2
* 46	PAOZZ	5310000145850	96906	MS27183-42	WASHER,FLAT 10..... UOC:TTA,TTT,TT1	8
* 47	PAOZZ	5306015485059	19207	12340001-1	BOLT,SHOULDER 1/4-20 X 1..... UOC:TTA,TTT,TT1	2

(1) ITEM NO	(2) SMR CODE	(3) NSN	(4) CAGEC	(5) PART NUMBER	(6) DESCRIPTION AND USABLE ON CODES(UOC)	(7) QTY
* 48	PAOZZ	5310011946459	19207	12339724	WASHER,FLAT 5/16..... UOC:TTA,TTT,TT1	2
* 49	PAOZZ	5310011191024	24617	2436162	WASHER,FLAT 5/16..... UOC:TTA,TTT,TT1	6

END OF FIGURE

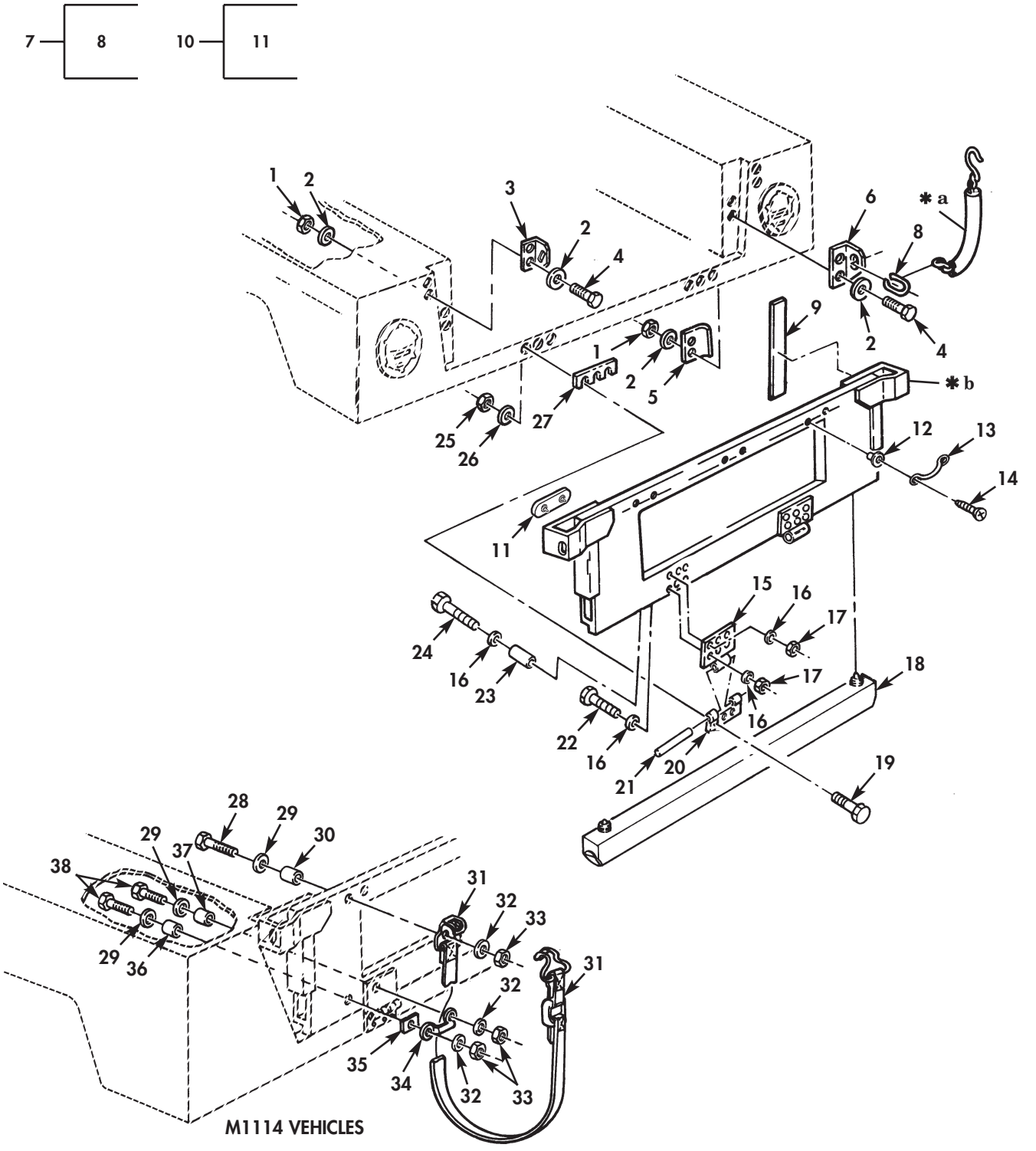

✱ **a** PART OF ITEM 7

✱ **b** PART OF ITEM 10

Figure 208. Tailgate Assembly and Related Parts.

(1) ITEM NO	(2) SMR CODE	(3) NSN	(4) CAGEC	(5) PART NUMBER	(6) DESCRIPTION AND USABLE ON CODES(UOC)	(7) QTY
					GROUP 1801 BODY,CAB,HOOD,AND HULL ASSEMBLY	
					FIG. 208 TAILGATE ASSEMBLY AND RELATED PARTS	
1	PAOZZ	5310008140673	96906	MS51943-33	NUT,SELF-LOCKING,HE 5/16-18.....	8
2	PAOZZ	5310011191024	24617	2436162	WASHER,FLAT 5/16.....	16
3	PFOZZ	5340012605792	19207	12338974-2	BRACKET,ANGLE R.H.....	1
* 3	PFOZZ	5340012609874	19207	12338974-1	BRACKET,ANGLE L.H.....	1
4	PAOZZ	5306000514077	80204	B1821BH031F113N	BOLT,MACHINE 5/16-18 X 1.125.....	8
5	PFOZZ	5340011858724	34623	5575752	BRACKET,ANGLE.....	2
6	PFOZZ	5340011861280	34623	5575702	BRACKET,ANGLE L.H.....	1
6	PFOZZ	5340011861281	34623	5575703	BRACKET,ANGLE R.H.....	1
7	PAOZZ	2510009332893	19207	12339227-1	COVER AND CHAIN L.H.....	1
7	PFOZZ	2510009332895	19207	12339227-2	COVER AND CHAIN R.H.....	1
8	PAOZZ	4010011948546	19207	12339223	.LINK,CHAIN,LAP.....	1
9	PFOZZ	5330011932338	19207	12339228-9	RUBBER STRIP.....	2
10	PAOFF	2510011739316	19207	12338981-1	TAILGATE,VEHICLE BO..... UOC:XAA	1
10	PAOFF	2510013785615	34623	12338981-2	TAILGATE,VEHICLE BO..... UOC:XBB	1
* 11	PAOZZ	5340014968028	19207	12339961-1	.BUMPER,NONMETALLIC..... UOC:XBB	1
* 12	PAOZZ	5310011981723	19207	12339998-14	NUT,PLAIN,BLIND RIV #10-32..... UOC:XAA	6
* 13	PAOZZ	5340011978673	19207	12338839-4	HANDLE,BOW..... UOC:XAA	3
* 14	PAOZZ	5305011993371	16941	PL25J02P12	SCREW,CAP,SOCKET HE #10-32 X 1.75.. UOC:XAA	6
* 15	PAOZZ	5340013672070	19207	12339945	HINGE,BUTT PART OF KIT P/N 57K0107..	2
* 16	PAOZZ	5310008093078	96906	MS27183-11	WASHER,FLAT 1/4 PART OF KIT P/N 57K0107.....	12
* 17	PAOZZ	5310010666759	72962	21NE-040	NUT,SELF-LOCKING,HE 1/4-20 PART OF KIT P/N 57K0107.....	6
* 18	PAOZZ	5340012598579	19207	12330780	BUMPER,NONMETALLIC.....	1
* 19	PAOZZ	5305000680511	80204	B1821BH038C125N	SCREW,CAP,HEXAGON H 3/8-16 X 1.25..	6
* 20	PAOZZ	5340011897739	34623	12339999	LEAF,BUTT HINGE.....	2
* 21	PAOZZ	5315011905908	19207	12339663	PIN,SPRING PART OF KIT P/N 57K0107..	2
* 22	PAOZZ	5305002253843	80204	B1821BH025C100N	SCREW,CAP,HEXAGON H 1/4-20 X 1.00 PART OF KIT P/N 57K0107.....	3
* 23	PAOZZ	5365014130275	19207	12338521-1	SPACER,SLEEVE PART OF KIT P/N 57K0107.....	3
* 24	PAOZZ	5305000712236	80205	MS90725-15	SCREW,CAP,HEXAGON H 1/4-20 X 2.25 PART OF KIT P/N 57K0107.....	3
* 25	PAOZZ	5310009359021	96906	MS51943-35	NUT,SELF-LOCKING,HE 3/8-16.....	6
* 26	PAOZZ	5310000806004	96906	MS27183-14	WASHER,FLAT 3/8.....	6
* 27	PAOZZ	5365012712491	19207	12340045	SPACER,PLATE.....	2
* 28	PAOZZ	5305000712513	80204	B1821BH025C250N	SCREW,CAP,HEXAGON H 1/4-20 X 2.50.. UOC:XBB	8
* 29	PAOZZ	5310008093078	96906	MS27183-11	WASHER,FLAT 1/4..... UOC:XBB	16
* 30	PAOZZ	5365011983505	34623	5583571	SPACER,SLEEVE.....	8

(1) ITEM NO	(2) SMR CODE	(3) NSN	(4) CAGEC	(5) PART NUMBER	(6) DESCRIPTION AND USABLE ON CODES(UOC)	(7) QTY
					UOC:XBB	
* 31	PAOZZ	5340011983457	31272	44943	STRAP,WEBBING.....	4
					UOC:XBB	
* 32	PAOZZ	5310012538949	34623	5592926	WASHER,FLAT 1/4.....	16
					UOC:XBB	
* 33	PAOZZ	5310010666759	72962	21NE-040	NUT,SELF-LOCKING,HE 1/4-20.....	16
					UOC:XBB	
* 34	PAOZZ	5340011978674	34623	5583568	HANDLE,BOW.....	4
					UOC:XBB	
* 35	PAOZZ	5365011983463	19207	12340132	SPACER,PLATE.....	2
					UOC:XBB	
* 36	PFOZZ	5365011983401	34623	5583572	SPACER,SLEEVE.....	6
					UOC:XBB	
* 37	PFOZZ	5365011983400	34623	12338521-1	SPACER,SLEEVE.....	2
					UOC:XBB	
* 38	PAOZZ	5305000712511	80204	B1821BH025C200N	SCREW,CAP,HEXAGON H 1/4-20 X 2.00..	8
					UOC:XBB	

END OF FIGURE

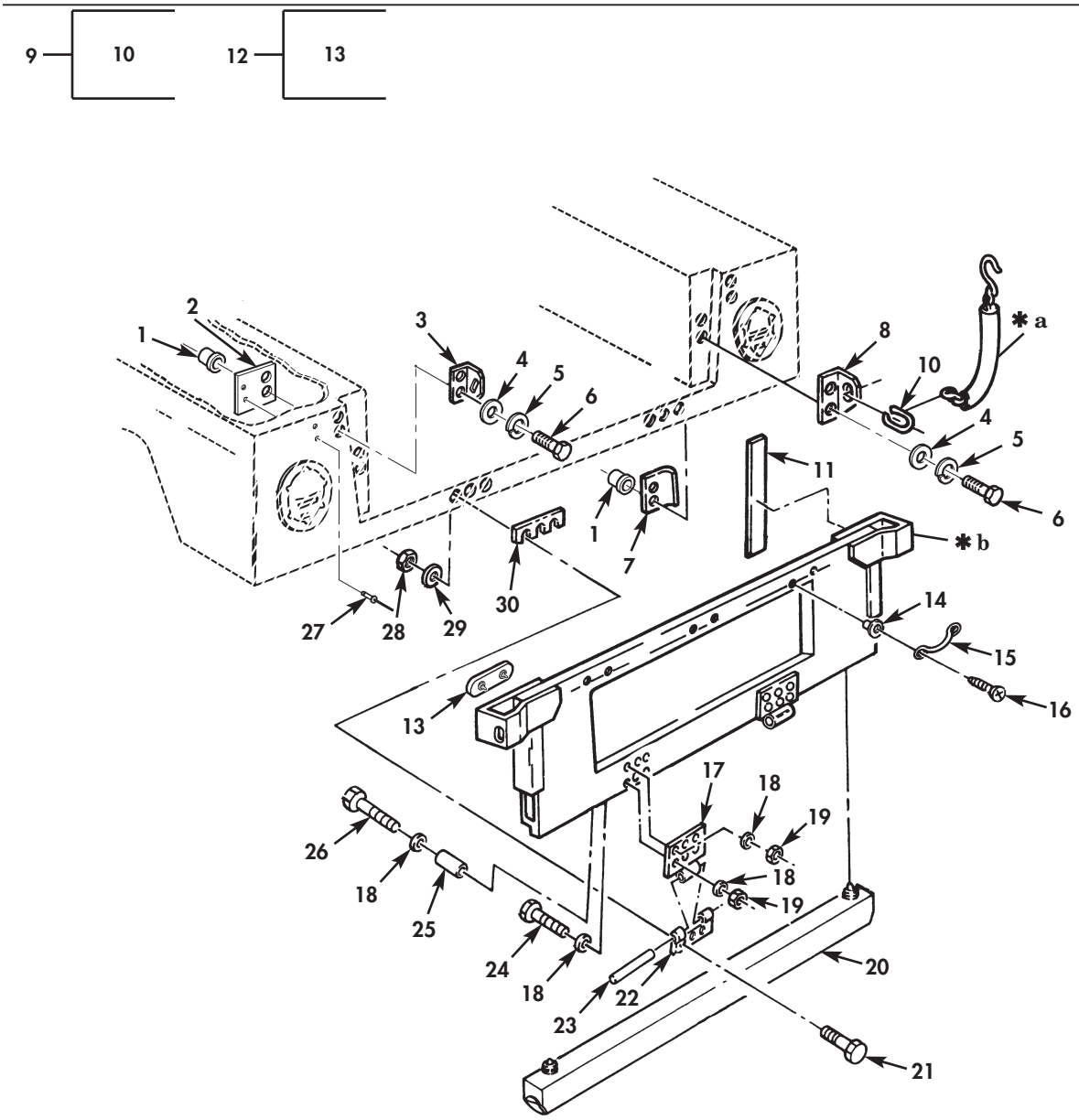

✱**a** PART OF ITEM 9

✱**b** PART OF ITEM 12

Figure 208A. Tailgate Assembly.

(1) ITEM NO	(2) SMR CODE	(3) NSN	(4) CAGEC	(5) PART NUMBER	(6) DESCRIPTION AND USABLE ON CODES(UOC)	(7) QTY
					GROUP 1801 BODY,CAB,HOOD,AND HULL ASSEMBLY	
					FIG. 208A TAILGATE ASSEMBLY	
* 1	PAOZZ	5320015050478	78276	ALS4-518-312	INSERT,SCREW,THRREAD..... UOC:TTT,UUU	8
* 2	PAOZZ		34623	6015552	REINFORCEMENT..... UOC:TTT,UUU	2
* 3	PAOZZ	5340012605792	19207	12338974-2	BRACKET,ANGLE R.H..... UOC:TTT,UUU	1
* 3	PAOZZ	5340012609874	19207	12338974-1	BRACKET,ANGLE L.H..... UOC:TTT,UUU	1
* 4	PAOZZ	5310014229287	6W728	4397005-012	WASHER,FLAT 5/16..... UOC:TTT,UUU	8
* 5	PAOZZ	5310004079566	80205	MS35338-45	WASHER,LOCK 5/16..... UOC:TTT,UUU	8
* 6	PAOZZ	5306000514077	80204	B1821BH031F113N	BOLT,MACHINE 5/16-18 X 1.125..... UOC:TTT,UUU	8
* 7	PFOZZ	5340011858724	34623	5575752	BRACKET,ANGLE..... UOC:TTT,UUU	2
* 8	PFOZZ	5340011861280	34623	5575702	BRACKET,ANGLE L.H..... UOC:TTT,UUU	1
* 8	PFOZZ	5340011861281	34623	5575703	BRACKET,ANGLE R.H..... UOC:TTT,UUU	1
* 9	PAOZZ	2510009332893	19207	12339227-1	COVER AND CHAIN L.H..... UOC:TTT,UUU	1
* 9	PAOZZ	2510009332895	19207	12339227-2	COVER AND CHAIN R.H..... UOC:TTT,UUU	1
* 10	PAOZZ	4010011948546	19207	12339223	.LINK,CHAIN,LAP..... UOC:TTT,UUU	1
* 11	PFOZZ	5330011932338	19207	12339228-9	RUBBER STRIP..... UOC:TTT,UUU	2
* 12	PAOFF	2510013785615	19207	12338981-2	TAILGATE,VEHICLE BO..... UOC:TTT,UUU	1
* 13	PAOFF	5340014968028	19207	12339961-1	.BUMPER,NONMETALLIC..... UOC:TTT,UUU	2
* 14	PAOZZ	5310011981723	19207	12339998-14	NUT,PLAIN,BLIND RIV #10-32..... UOC:TTT,UUU	6
* 15	PAOZZ	5340011978673	19207	12338839-4	HANDLE,BOW..... UOC:TTT,UUU	3
* 16	PAOZZ	5305011993371	19207	12339519	SCREW,CAP,SOCKET HE..... UOC:TTT,UUU	6
* 17	PAOZZ	5340013672070	19207	12339945	HINGE,BUTT PART OF KIT P/N 57K0107.. UOC:TTT,UUU	2
* 18	PAOZZ	5310008093078	96906	MS27183-11	WASHER,FLAT 1/4..... UOC:TTT,UUU	12
* 19	PAOZZ	5310010666759	72962	21NE-040	NUT,SELF-LOCKING,HE 1/4-20 PART OF KIT P/N 57K0107..... UOC:TTT,UUU	6
* 20	PAOZZ	5340012598579	19207	12340780	BUMPER,NONMETALLIC..... UOC:TTT,UUU	1
* 21	PAOZZ	5305000680511	80204	B1821BH038C125N	SCREW,CAP,HEXAGON H 3/8-16 X 1.25.. UOC:TTT,UUU	6

(1) ITEM NO	(2) SMR CODE	(3) NSN	(4) CAGEC	(5) PART NUMBER	(6) DESCRIPTION AND USABLE ON CODES(UOC)	(7) QTY
* 22	PAOZZ	5340011897739	34623	12339999	LEAF,BUTT HINGE..... UOC:TTT,UUU	2
* 23	PAOZZ	5315011905908	19207	12339663	PIN,SPRING HINGE TA PART OF KIT P/N. 5K0107..... UOC:TTT,UUU	2
* 24	PAOZZ	5305002253843	80204	B1821BH025C100N	SCREW,CAP,HEXAGON H 1/4-20 X 1.00... UOC:TTT,UUU	3
* 25	PAOZZ	5365014130275	19207	12338521-1	SPACER,SLEEVE PART OF KIT P/N 57K0107..... UOC:TTT,UUU	3
* 26	PAOZZ	5305000712236	80205	MS90725-15	SCREW,CAP,HEXAGON H 1/4-20 X 2.25 PART OF KIT P/N 57K0107..... UOC:TTT,UUU	3
* 27	PAOZZ	5320012716357	9K475	MGLP-B6-4	RIVET,BLIND..... UOC:TTT,UUU	4
* 28	PAOZZ	5310009359021	96906	MS51943-35	NUT,SELF-LOCKING 3/8-16..... UOC:TTT,UUU	6
* 29	PAOZZ	5310000806004	96906	MS27183-14	WASHER,FLAT 3/8..... UOC:TTT,UUU	6
* 30	PAOZZ	5365012712491	19207	12340045	SPACER,PLATE..... UOC:TTT,UUU	2

END OF FIGURE

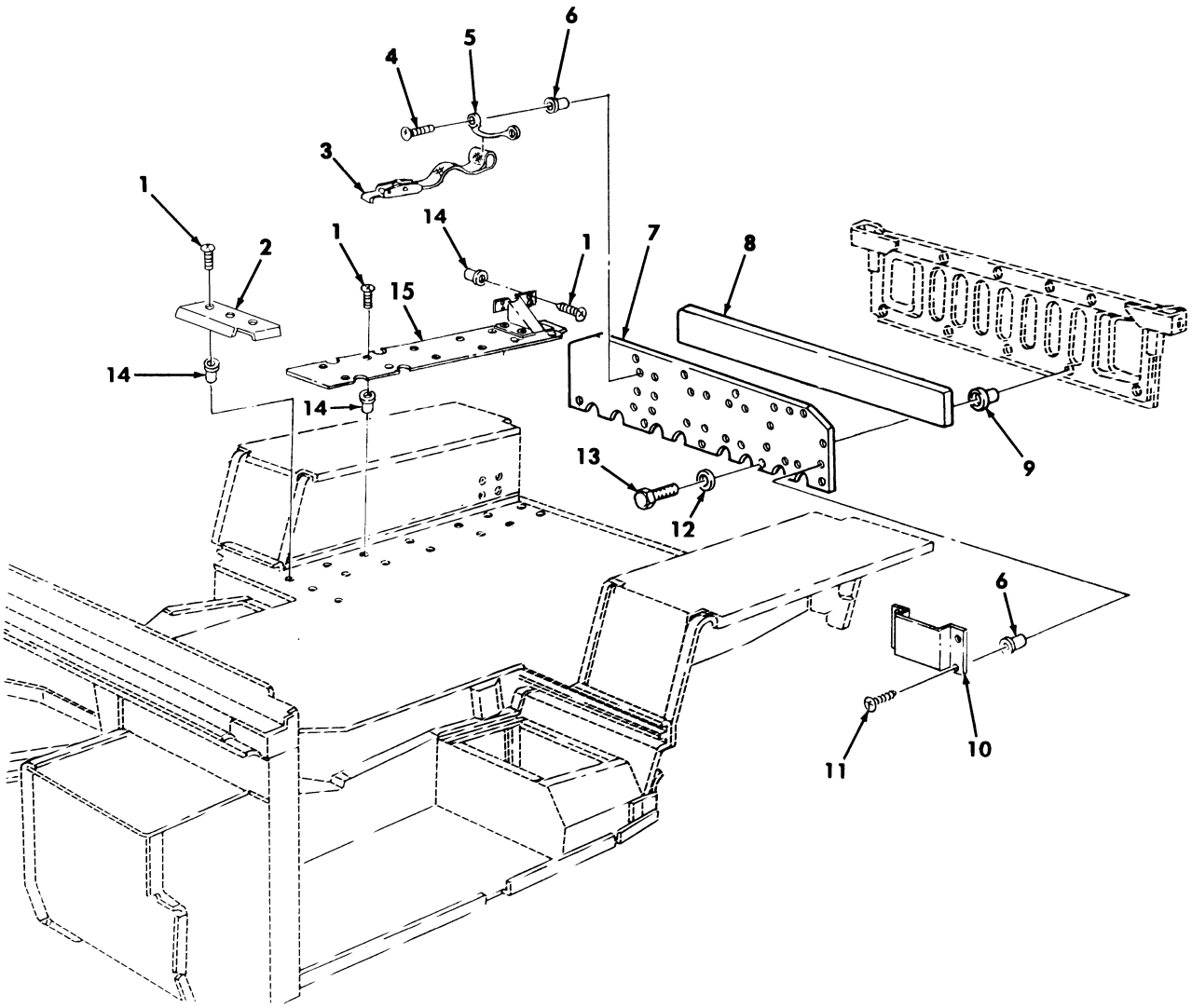

Figure 209. Tailgate Armor – M1114.

(1) ITEM NO	(2) SMR CODE	(3) NSN	(4) CAGEC	(5) PART NUMBER	(6) DESCRIPTION AND USABLE ON CODES(UOC)	(7) QTY
					GROUP 1801 BODY,CAB,HOOD,AND HULL ASSEMBLY	
					FIG. 209 TAILGATE ARMOR - M1114	
* 1	PAOZZ	5305014339252	6W728	4397008-039	SCREW,MACHINE #6-32 X 1/2..... UOC:XBB	4
2	PFOZZ	5340014342843	6W728	4660500	COVER,PROTECTIVE,DU..... UOC:XBB	1
3	PAOZZ	5340012586158	31272	45410-16	STRAP,WEBBING..... UOC:XBB	4
4	PAOZZ	5305014108386	24617	156966	SCREW,MACHINE #10-24 X 5/8..... UOC:XBB	18
5	PAOZZ	5340013145957	19207	12338839-1	LOOP,STRAP FASTENER..... UOC:XBB	9
6	PAOZZ	5325014110066	78276	ALS4-1024-130	INSERT,SCREW THREAD..... UOC:XBB	22
7	PFOZZ	9515011853118	19207	12339232-1	ARMOR PLATE..... UOC:XBB	1
8	PFOZZ	2540011925948	34623	12339029-2	DAMPENER,SOUND,TAIL..... UOC:XBB	1
* 9	PAOZZ	5310011981722	34623	5982526	NUT,PLAIN,BLIND RIV 1/4-20..... UOC:XBB	9
10	PAOZZ	4210014350289	6W728	4660728	HOLDER,FIRE AX..... UOC:XBB	1
11	PAOZZ	5305009846208	95105	343-0586-000	SCREW,MACHINE,PAN H #10-32 X 3/8... UOC:XBB	4
12	PAOZZ	5310005825965	96906	MS35338-44	WASHER,LOCK 1/4..... UOC:XBB	9
13	PAOZZ	5305002253843	80204	B1821BH025C100N	SCREW,CAP,HEXAGON H 1/4-20 X 1.00.. UOC:XBB	9
14	PAOZZ	5325014650001	78276	ALS7-632-80	NUT,UPSET #6-32..... UOC:XBB	19
15	PFOZZ	5340014352845	6W728	4660527	COVER,PROTECTIVE,DU..... UOC:XBB	1

END OF FIGURE

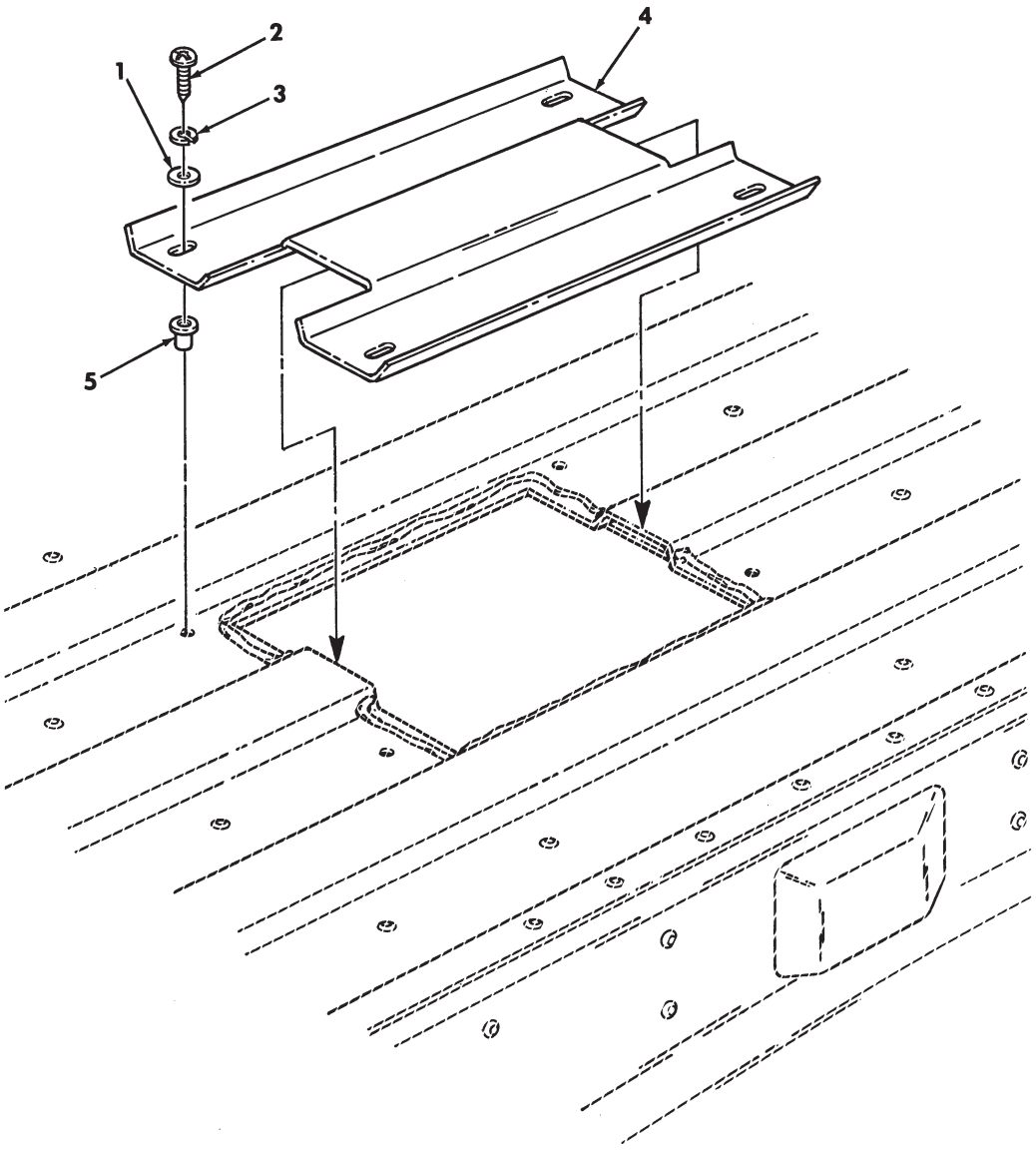

Figure 209A. Cover, Access Cargo Floor.

(1) ITEM NO	(2) SMR CODE	(3) NSN	(4) CAGEC	(5) PART NUMBER	(6) DESCRIPTION AND USABLE ON CODES(UOC)	(7) QTY
					GROUP 1801 BODY,CAB,HOOD AND HULL ASSEMBLY	
					FIG. 209A COVER,ACCESS CARGO FLOOR	
* 1	PAOZZ	5310013611163	24617	9417373	WASHER,FLAT.....	4
* 2	PAOZZ	5305010831591	96906	MS51957-64B	SCREW,MACHINE.....	4
* 3	PAOZZ	5310009222017	30379	120217	WASHER,LOCK.....	4
* 4	PAOZZ	5340014570804	19207	12460506	COVER,ACCESS.....	1
* 5	PA0ZZ	5325014608350	19207	12446871-10	INSERT,SCREW THREAD.....	1

END OF FIGURE

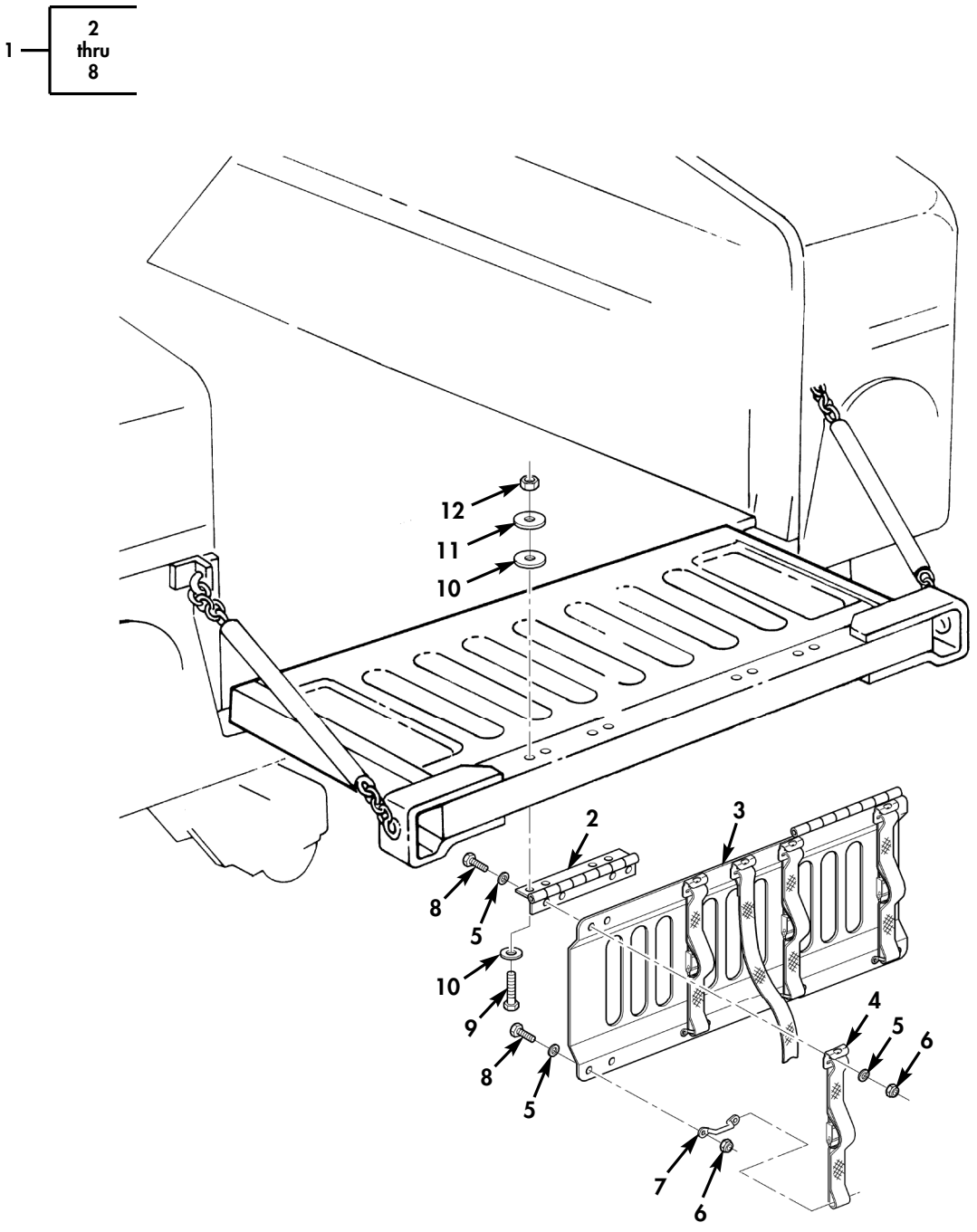

Figure 209B. Plate Assembly, Tripod.

(1) ITEM NO	(2) SMR CODE	(3) NSN	(4) CAGEC	(5) PART NUMBER	(6) DESCRIPTION AND USABLE ON CODES(UOC)	(7) QTY
					GROUP 1801 BODY,CAB,HOOD,AND HULL ASSEMBLY	
					FIG. 209B PLATE ASSEMBLY,TRIPOD	
* 1	PAOOO		19207	12518390	BRACKET,MOUNTING..... UOC:TT1	1
* 2	PAOZZ	2510015709641	19207	12518386	.HINGE ASSEMBLY,DOOR..... UOC:TT1	2
* 3	PAOZZ	5340015716258	19207	12518385	.PLATE,MOUNTING..... UOC:TT1	1
* 4	PAOZZ	5340011983457	31272	44943-11	.STRAP,WEBBING..... UOC:TT1	5
* 5	PAOZZ	5310013801614	19207	12387279-10	.WASHER,FLAT..... UOC:TT1	28
* 6	PAOZZ	5310015481269	81349	M45913/4-4CG8Z	.NUT,SELF-LOCKING,HE..... UOC:TT1	18
* 7	PAOZZ	5340011978674	19207	12338839-6	.HANDLE,BOW..... UOC:TT1	4
* 8	PAOZZ	5305000712505	80204	B1821BH025C088N	.SCREW,CAP,HEXAGON H 1/4-20 X .875.. UOC:TT1	18
* 9	PAOZZ	5305000712513	80204	B1821BH025C250N	SCREW,CAP,HEXAGON H 1/4-20 X 2.50... UOC:TT1	8
* 10	PAOZZ	5310014650709	19207	12387279-52	WASHER,FLAT..... UOC:TT1	16
* 11	PAOZZ	5310013801614	19207	12387279-10	WASHER,FLAT..... UOC:TT1	8
* 12	PAOZZ	5310015481269	81349	M45913/4-4CG8Z	NUT,SELF-LOCKING,HE..... UOC:TT1	8

END OF FIGURE

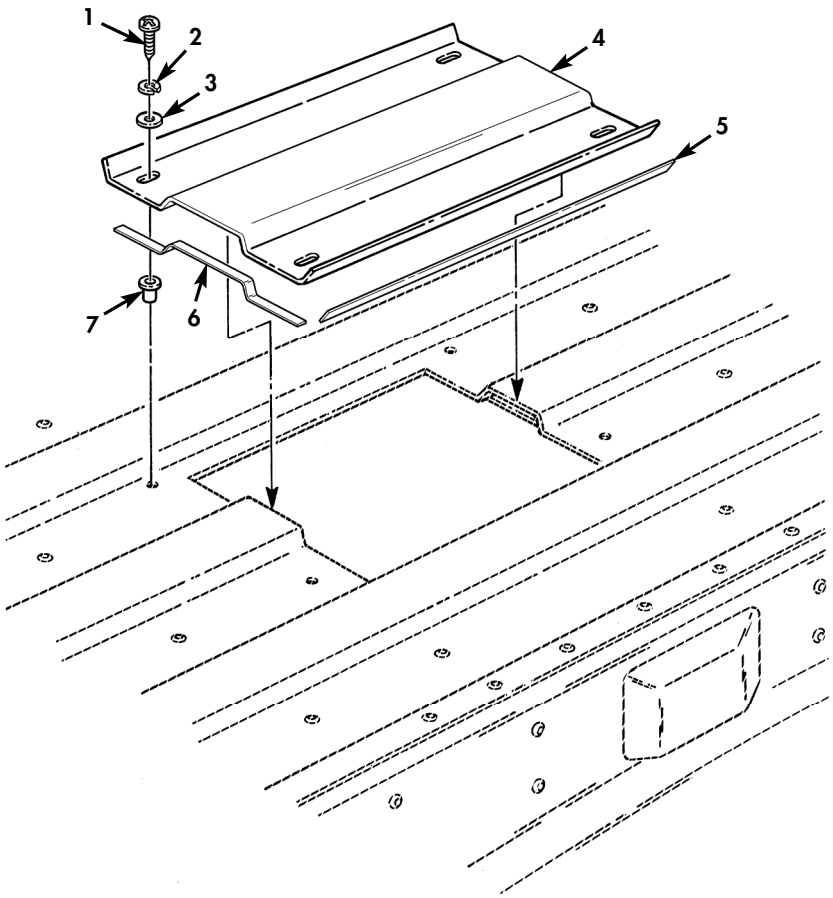

Figure 209C. Parking Brake Access Cover and Related Hardware (Serial Number 300000 and Above).

(1) ITEM NO	(2) SMR CODE	(3) NSN	(4) CAGEC	(5) PART NUMBER	(6) DESCRIPTION AND USABLE ON CODES(UOC)	(7) QTY
					GROUP 1801 BODY,CAB, HOOD,AND HULL ASSSEMBLY	
					FIG. 209C PARKING BRAKE ACCESS COVER AND RELATED HARDWARE (SERIAL NUMBER 300000 AND ABOVE)	
* 1	PAOZZ	5305002253843	80204	B1821BH025C100N	SCREW,CAP,HEXAGON H 1/4-20 X 1.00.. UOC:TTA,TTT,TT1,UUA,UUU,UU1,UU2	8
* 2	PAOZZ	5310005825965	80205	MS35338-44	WASHER,LOCK 1/4..... UOC:TTA,TTT,TT1,UUA,UUU,UU1,UU2	8
* 3	PAOZZ	5310011023270	34623	2436161	WASHER,FLAT 1/4..... UOC:TTA,TTT,TT1,UUA,UUU,UU1,UU2	8
* 4	PFOZZ	5340015659513	34623	6043073	COVER,ACCESS..... UOC:TTA,TTT,TT1,UUA,UUU,UU1,UU2	2
* 5	MOOZZ		12624	EP-3376-13IN	SEAL,NONMETALLIC MAKE FROM TAPE P/N EP-3376,13 INCHES LONG..... UOC:TTA,TTT,TT1,UUA,UUU,UU1,UU2	4
* 6	MOOZZ		12624	EP-3376-6.62IN	SEAL,NONMETALLIC MAKE FROM TAPE P/N EP-3376,6.62 INCHES LONG..... UOC:TTA,TTT,TT1,UUA,UUU,UU1,UU2	4
* 7	PAOZZ	5325015482516	78276	AKS4-420-260	INSERT,SCREW THREAD 1/4-20..... UOC:TTA,TTT,TT1,UUA,UUU,UU1,UU2	8

END OF FIGURE

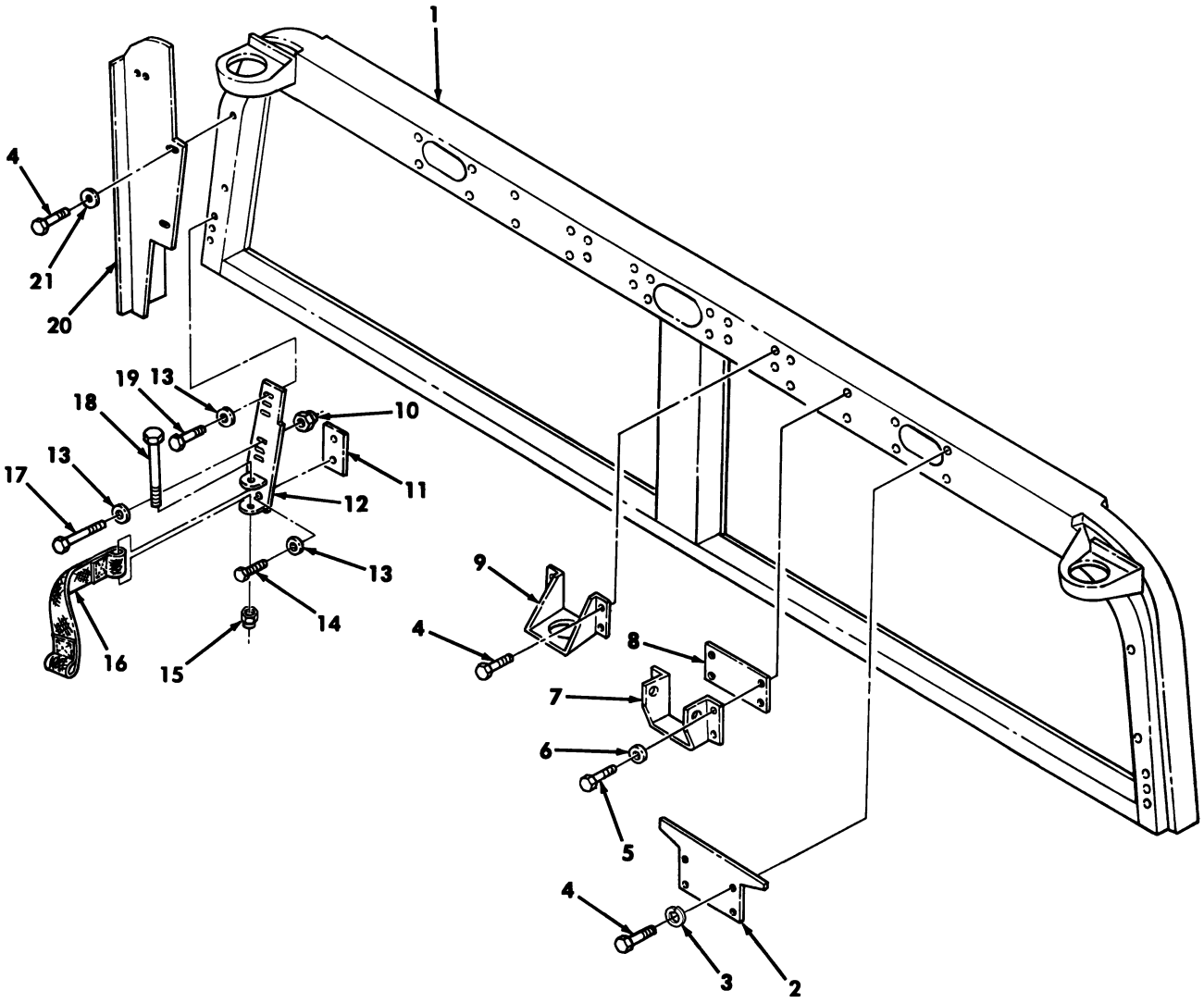

Figure 210. Windshield Assembly.

(1) ITEM NO	(2) SMR CODE	(3) NSN	(4) CAGEC	(5) PART NUMBER	(6) DESCRIPTION AND USABLE ON CODES(UOC)	(7) QTY
					GROUP 1802 FENDERS,RUNNING BOARDS WITH MOUNTING AND ATTACHING PARTS, OUTRIGGERS,WINDSHIELD,AND GLASS	
					FIG. 210 WINDSHIELD ASSEMBLY	
1	PAFZZ	2510014201884	6W728	4668518	FRAME,WINDOW,VEHICU..... UOC:XBB	1
2	PBOZZ	2540014196300	6W728	4668264	ARMOR,SUPPLEMENTAL,..... UOC:XBB	2
* 3	PAOZZ	5310005825965	96906	MS35338-44	WASHER,LOCK..... UOC:XBB	8
* 4	PAOZZ	5305002253843	80204	B1821BH031C100N	BOLT,MACHINE .313-18 X 1.00..... UOC:XBB	20
* 5	PAFZZ	5305002264831	80204	B1821BH031C150N	SCREW,CAP HEXAGON H .313-18 X 1.50. UOC:XBB	8
* 6	PAFZZ	5310014229287	6W728	4397005-012	WASHER,FLAT .344..... UOC:XBB	8
* 7	PAFZZ	2510012526240	19207	12340116	FRAME,SECTION,STRUC..... UOC:XBB	2
* 8	PBFZZ	5365011954949	19207	12340099-1	SPACER,PLATE..... UOC:XBB	10
* 9	PBFZZ	5340014208714	6W728	4668661	BRACKET,MOUNTING..... UOC:XBB	2
* 10	PAFZZ	5310014398172	6W728	4397064-003	NUT,SELF-LOCKING,HE .313-18..... UOC:XBB	6
* 11	PAFZZ	5340014467449	6W728	4668219	PLATE,MOUNTING..... UOC:XBB	2
* 12	PAFZZ	5340014195187	6W728	4668205	BRACKET,MOUNTING L.H..... UOC:XBB	1
* 12	PAFZZ	5340014195186	6W728	4668202	BRACKET,MOUNTING R.H..... UOC:XBB	1
* 13	PAOZZ	5340014178995	6W728	4397005-011	WASHER,FLAT .312..... UOC:XBB	16
* 14	PAOZZ	5306014339190	6W728	4397010-033	BVOLT,MACHINE .313-18 X .875..... UOC:XBB	4
* 15	PAOZZ	5310014398173	6W728	4397064-001	NUT,SELF-LOCKING,HE .250-20..... UOC:XBB	2
* 16	PAOZZ	5340014176474	6W728	4668245	STRAP,WEBBING..... UOC:XBB	2
* 17	PAOZZ	5305014289197	6W728	4397000-033	SCREW,CAP HEXAGON H .313-18 X .875. UOC:XBB	6
* 18	PAOZZ	5306014339188	6W728	4397000-017	BOLT,MACHINE .250-20 X 2.75..... UOC:XBB	2
* 19	PBOZZ	5305014206637	6W728	4397000-034	SCREW,CAP HEXAGON H .313-18 X 1.00. UOC:XBB	6
* 20	PBOZZ	2540014436467	6W728	4660846	ARMOR,SUPPLEMENTAL L.H..... UOC:XBB	1
* 20	PBOZZ	2540014436469	6W728	4660847	ARMOR,SUPPLEMENTAL R.H..... UOC:XBB	1
* 21	PAOZZ	5310014357784	6W728	4397005-010	WASHER,FLAT .281..... UOC:XBB	4

END OF FIGURE

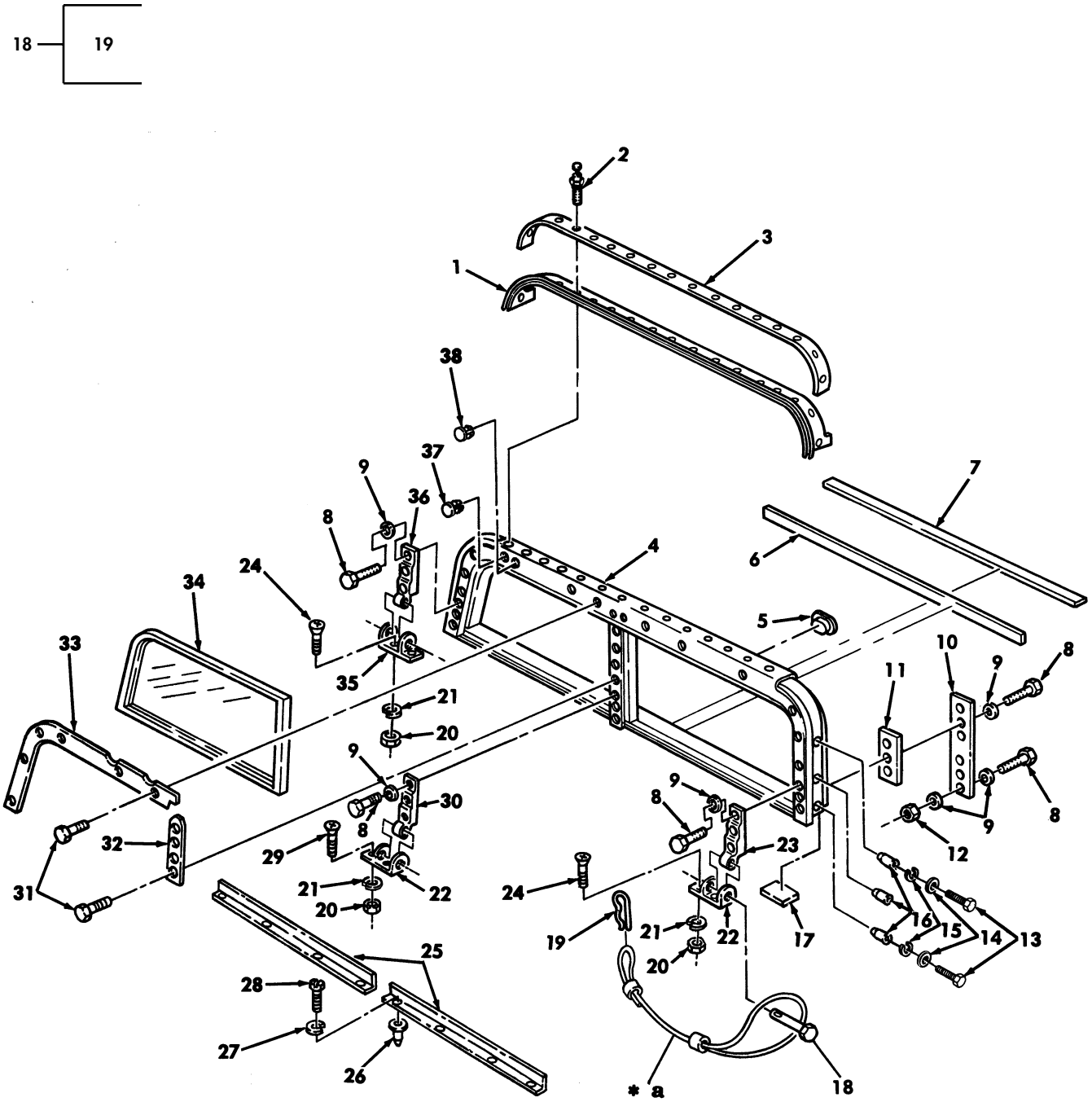

* a PART OF ITEM 18

Figure 210A. Windshield Assembly, Ballistic.

(1) ITEM NO	(2) SMR CODE	(3) NSN	(4) CAGEC	(5) PART NUMBER	(6) DESCRIPTION AND USABLE ON CODES(UOC)	(7) QTY
					UOC:TTT	
* 23	PFFZZ	2510011987413	19207	12338841-1	HINGE,WINDSHIELD UPPER,L.H.....	1
					UOC:TTT	
* 24	PAFZZ	5305009585254	80205	MS35190-307	SCREW,MACHINE 5/16-18 X 1.25.....	4
					UOC:TTT	
* 25	PAFZZ	2510014110652	34623	12447029G1	FRAME,WIONDOW VEHIC.....	2
					UOC:TTT	
* 26	PAFZZ	5325014110066	78276	ALS4-1024-130	INSERT,SCREW THREAD.....	8
					UOC:TTT	
* 27	PAFZZ	5310009222017	72582	120217	WASHER,LOCK #10.....	8
					UOC:TTT	
* 28	PAFZZ	5305002400194	96906	MS51849-76	SCREW,MACHINE.....	8
					UOC:TTT	
* 29	PAFZZ	5305009585253	80205	MS35190-306	SCREW,MACHINE 5/16-18 X 1.00.....	2
					UOC:TTT	
* 30	PFFZZ	5340011850401	19207	12338835	LEAF,BUTT HINGE UPPER,CENTER.....	1
					UOC:TTT	
* 31	PAOZZ	5305012645809	19207	12342499-2	SCREW,TAPPING #10-32 X 5/8.....	1
					UOC:TTT	
* 32	PFOZZ	2590011883225	34623	5581260	MOLDING,METAL CENTER,BASIC.....	1
					UOC:TTT	
* 33	PFOZZ	2590011891067	19207	12338852	MOLDING,METAL UPPER,BASIC.....	2
					UOC:TTT	
* 34	PAOZZ	2510012892233	19207	12339509	WINDOW,VEHICUALR L.H.,BASIC.....	1
					UOC:TTT	
* 35	PFFZZ	5342011850116	19207	12338822-2	HINGE,WINDSHIELD LOWER,R.H.....	1
					UOC:TTT	
* 36	PAFZZ	5340012038608	34623	5585154	LEAF,BUTT HINGE UPPER,R.H.....	1
					UOC:TTT	
* 37	PAOZZ	5340013327602	19207	12339661-1	BUTTON,PLUG.....	1
					UOC:TTT	
* 38	PAOZZ	5340011854959	52854	207-320401-00	BUTTON,PLUG.....	2
					UOC:TTT	

END OF FIGURE

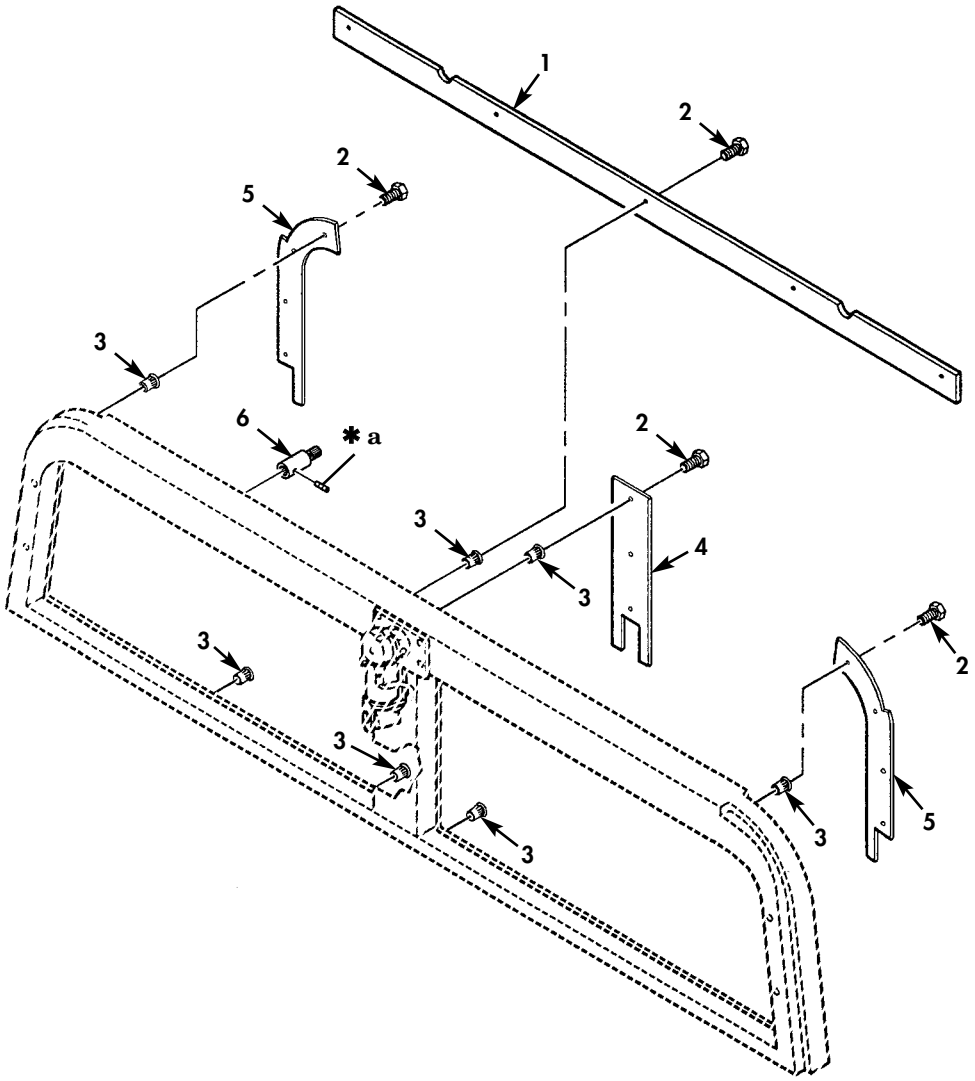

✱**a** PART OF ITEM 6

Figure 210B. Ballistic Windshield Assembly (Sheet 1 of 2).

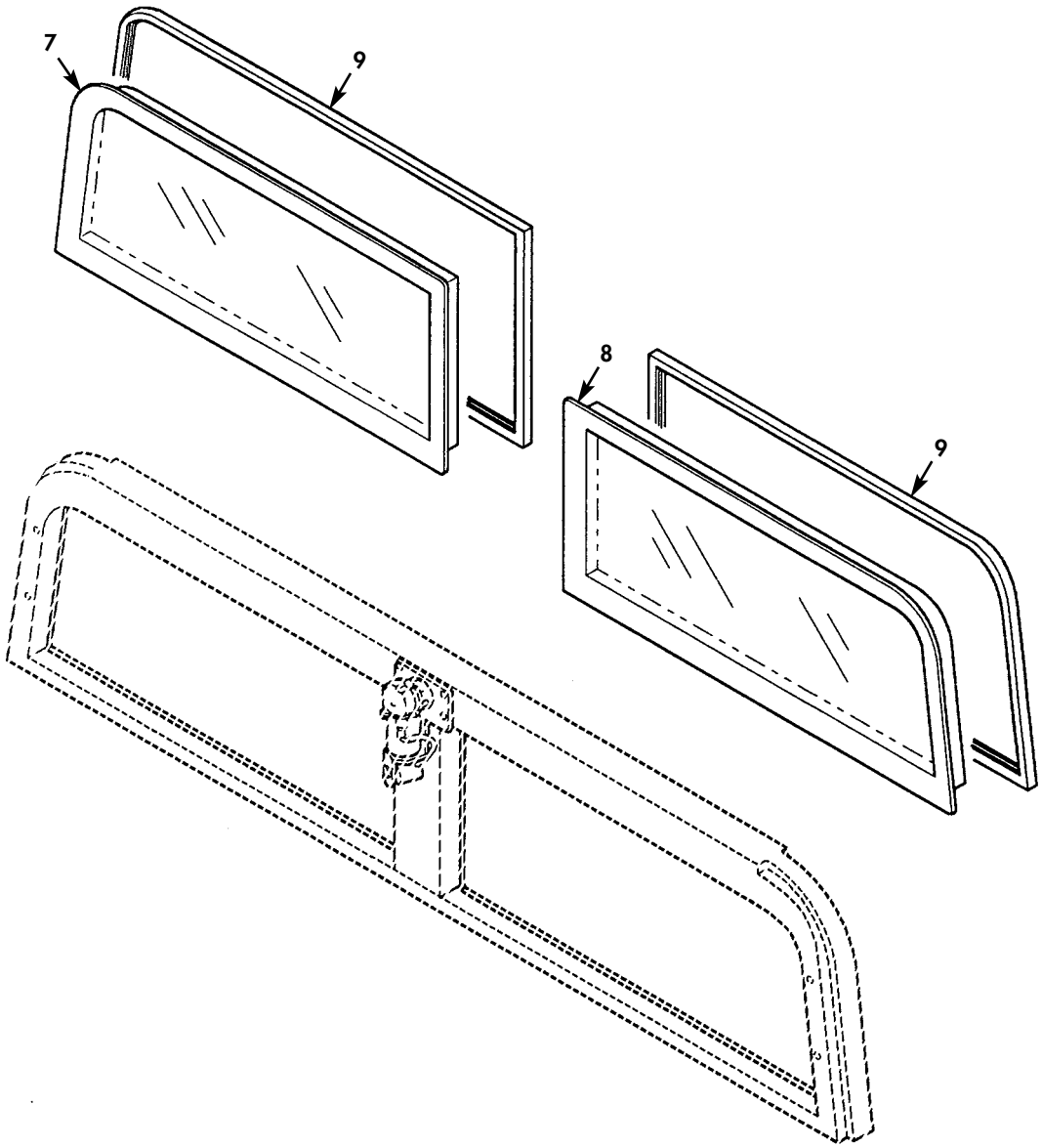

Figure 210B. Ballistic Windshield Assembly (Sheet 2 of 2).

(1) ITEM NO	(2) SMR CODE	(3) NSN	(4) CAGEC	(5) PART NUMBER	(6) DESCRIPTION AND USABLE ON CODES(UOC)	(7) QTY
					GROUP 1802 FENDERS,RUNNING BOARDS WITH MOUNTING AND ATTACHING PARTS, OUTRIGGERS,WINDSHIELD,AND GLASS	
					FIG. 210B BALLISTIC WINDSHIELD ASSEMBLY	
* 1	PAOZZ		6W728	6432437-200M1	CAPPING RING UPPER,TAN..... UOC:TTT	1
* 2	PAOZZ	5305002253843	80204	B1821BH025C100N	SCREW,CAP,HEXAGON H 1/4-20 X 1.00... UOC:TTT	12
* 3	PAOZZ	5310015212135	6W728	4397050-025	NUT,PLAIN,BLIND RI 1/4-20..... UOC:TTT	15
* 4	PAOZZ		6W728	6432436-200M1	CAPPING RING CENTER,TAN..... UOC:TTT	1
* 5	PAOZZ		6W728	6432435-200M1	CAPPING RING LEFT,TAN..... UOC:TTT	1
* 5	PAOZZ		6W728	6432451-200M1	CAPPING RING RIGHT,TAN..... UOC:TTT	1
* 6	PAOZZ		6W728	6430710	EXTENSION,WIPER ARM..... UOC:TTT	2
* 7	PAOZZ		6W728	6432258-200M1	ASSEMBLY,WINDSHIELD LEFT..... UOC:TTT,UUU	1
* 8	PAOZZ		6W728	6432257-200M1	ASSEMBLY,WINDSHIELD RIGHT..... UOC:TTT,UUU	1
* 9	PAOZZ	5330012095997	19207	12338860	SEAL,NONMETALLIC,STR..... UOC:TTT	2

END OF FIGURE

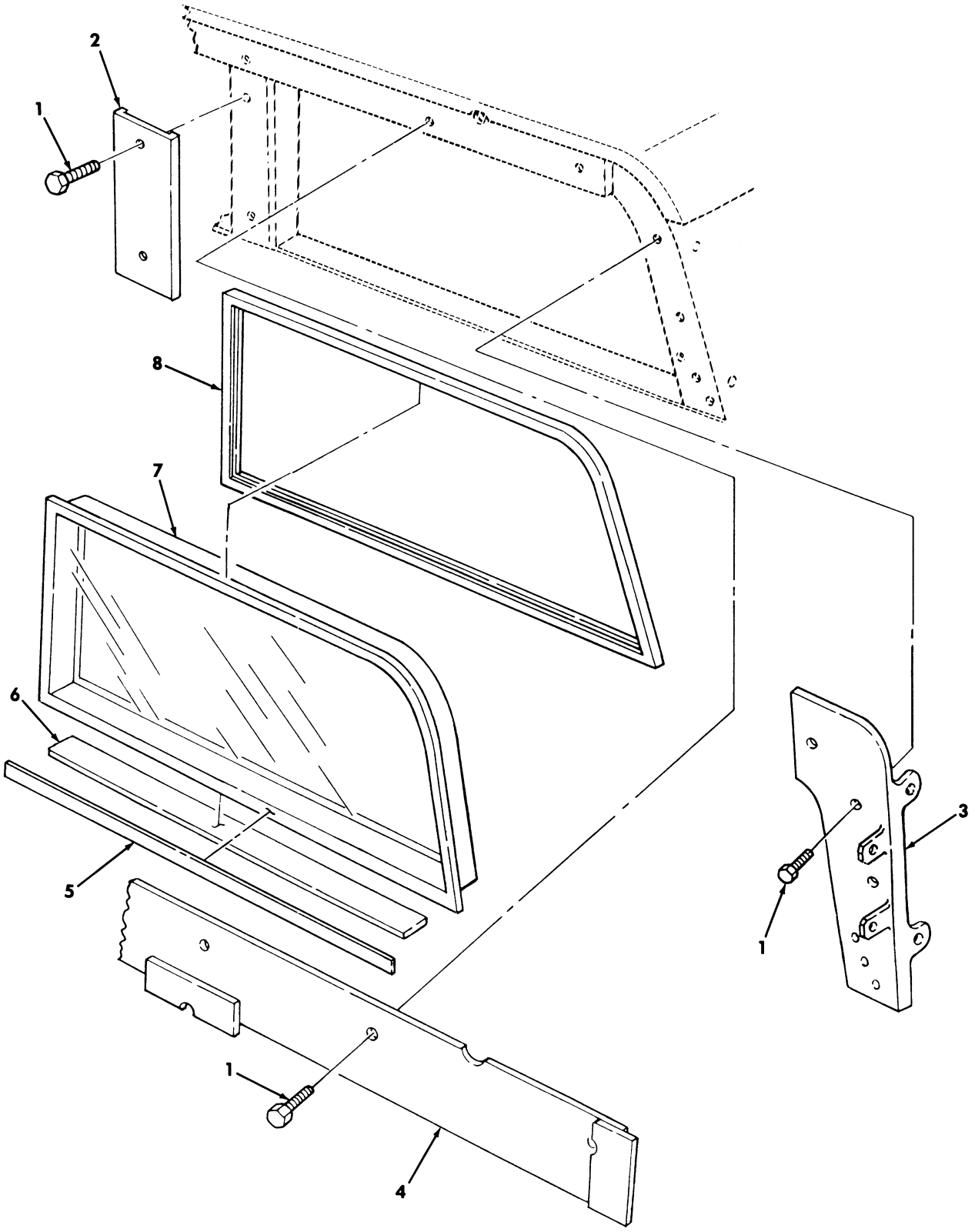

Figure 211. Windshield Assembly.

(1) ITEM NO	(2) SMR CODE	(3) NSN	(4) CAGEC	(5) PART NUMBER	(6) DESCRIPTION AND USABLE ON CODES(UOC)	(7) QTY
					GROUP 1802 FENDERS,RUNNING BOARDS WITH MOUNTING AND ATTACHING PARTS, OUTRIGGERS,WINDSHIELD,AND GLASS	
					FIG. 211 WINDSHIELD ASSEMBLY	
* 1	PAOZZ	5305002253843	80204	B1821BH025C100N	SCREW,CAP,HEX .250-20 X 1.00..... UOC:XBB	16
2	PBOZZ	2540014196298	6W728	4668561	ARMOR,SUPPLEMENTAL..... UOC:XBB	1
3	PBOZZ	2540014338133	6W728	4660848	ARMOR,SUPPLEMENTAL R.H..... UOC:XBB	1
3	PBOZZ	2540014338132	6W728	4660849	ARMOR,SUPPLEMENTAL L.H..... UOC:XBB	1
4	PFOZZ	2590014345246	6W728	4660708	MOLDING,METAL..... UOC:XBB	1
5	MOOZZ		6W728	7P0013-AR	RUBBER,NEOPRENE MAKE FROM RUBBER, P/N 7P0013,LENGTH TO SUIT..... UOC:XBB	2
* 6	MOOZZ		6W728	4668923-003	RUBBER,NEOPRENE MAKE FROM RUBBER, P/N 4668923,LENGTH TO SUIT..... UOC:XBB	2
7	PBOZZ	2510014359693	6W728	4660200	WINDOW,VEHICULAR W/DE-ICE,R.H..... UOC:XBB	1
7	PBOZZ	2510014359690	6W728	4660201	WINDOW,VEHICULAR W/DE-ICE,L.H..... UOC:XBB	1
8	PAOZZ	5330012095997	19207	12338860	SEAL,NONMETTALIC ST..... UOC:XBB	2

END OF FIGURE

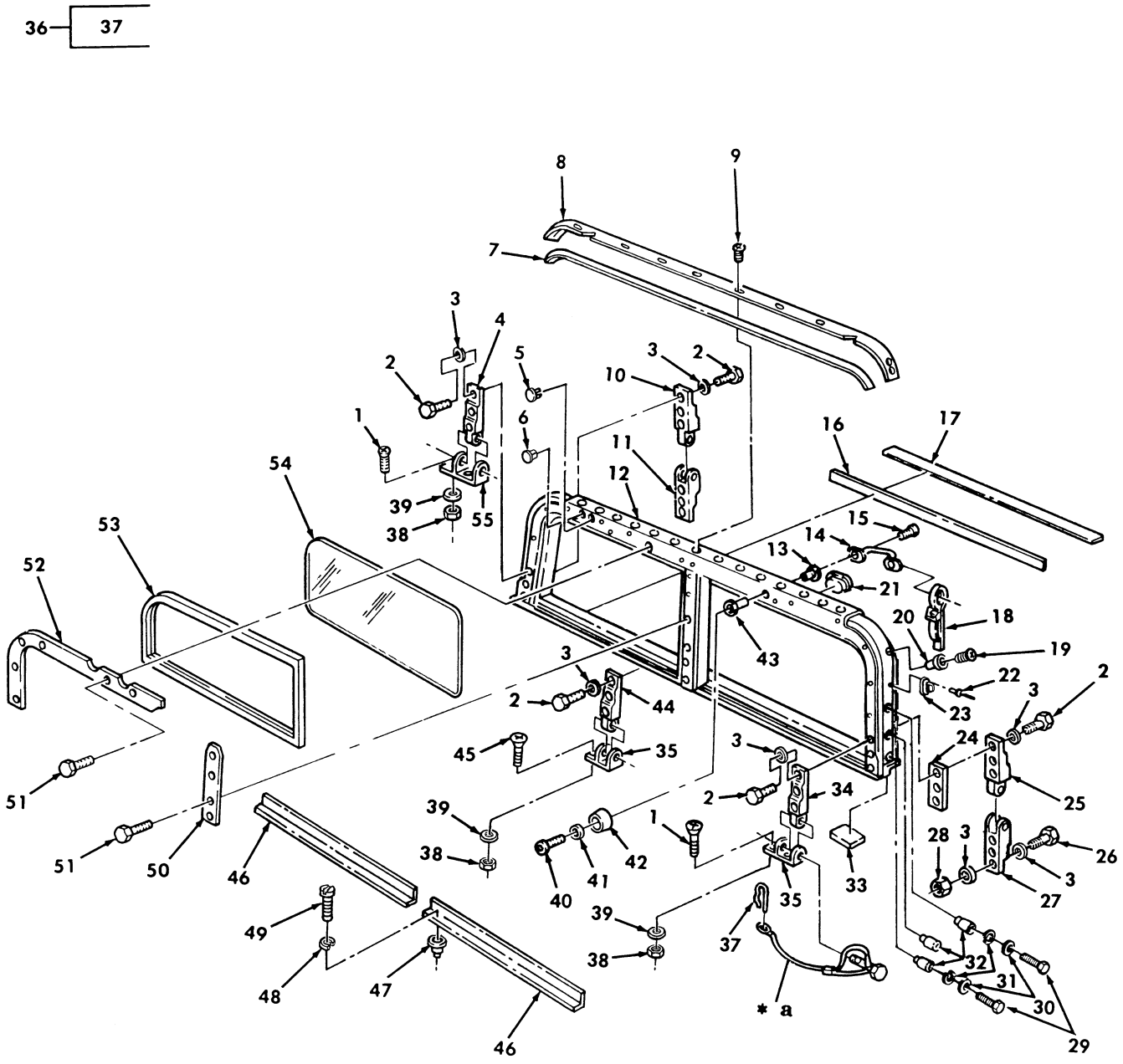

* a PART OF ITEM 36

Figure 212. Windshield, Folddown.

(1) ITEM NO	(2) SMR CODE	(3) NSN	(4) CAGEC	(5) PART NUMBER	(6) DESCRIPTION AND USABLE ON CODES(UOC)	(7) QTY
					GROUP 1802 FENDERS,RUNNING BOARDS WITH MOUNTING AND ATTACHING PARTS, OUTRIGGERS,WINDSHIELD,AND GLASS	
					FIG. 212 WINDSHIELD ASSEMBLY, FOLDDOWN	
1	PAOZZ	5305007637829	96906	MS51959-99	SCREW,MACHINE 5/16-18 X 1.00..... UOC:XAA	4
2	PAOZZ	5306002264828	80204	B1821BH031C113N	BOLT,MACHINE REAR LOWER HINGE,5/16-18 X 1.12..... UOC:XAA	15
3	PAOZZ	5310011191024	24617	2436162	WASHER,FLAT REAR LOWER HINGE,5/16.. UOC:XAA	27
4	PAOZZ	5340012038608	34623	5585154	LEAF,BUTT HINGE FRONT,R.H..... UOC:XAA	1
5	PAOZZ	5340011854959	52854	207-320401-00	BUTTON,PLUG..... UOC:XAA	1
6	PAOZZ	5340013327602	19207	12339661-1	BUTTON,PLUG..... UOC:XAA	1
7	MOOZZ		34623	5581366	SEAL MAKE FROM TAPE,P/N 4965,82 INCHES LONG..... UOC:XAA	1
8	PFOZZ	2540011965313	34623	5581367	FORMER,PILLAR FRONT..... UOC:XAA	1
9	PAOZZ	5305008550957	80205	MS24629-46	SCREW,TAPPING #10-24 X 1/2..... UOC:XAA	13
10	PAOZZ	5340011856997	19207	12338836-2	LEAF,BUTT HINGE R.H. FRONT..... UOC:XAA	1
11	PAOZZ	5340011867594	19207	12338834-2	LEAF,BUTT HINGE R.H.LOWER..... UOC:XAA	1
12	PFOZZ	2510014133360	19207	12446879	FRAME,WINDOW,VEHICU..... UOC:XAA	1
* 13	PAOZZ	5310002693466	96906	MS27130-S26	NUT,PLAIN,BLIND RIV .190-32 X .641. UOC:XAA	4
14	PAOZZ	5340011918186	34623	5582608	HANDLE,BOW..... UOC:XAA	2
15	PAOZZ	5305011850114	7X677	157166	SCREW #10-32 X 3/4..... UOC:XAA	4
16	MOOZZ		34623	5596171	SEAL LOWER,MAKE FROM SEAL,P/N 68-412121-1,81.50 INCHES LONG..... UOC:XAA	1
17	MOOZZ		34623	SF5590706	SEAL LOWER,MAKE FROM SEAL,P/N 68-412121-1,80.50 INCHES LONG..... UOC:XAA	1
18	PAOZZ	5340011857024	19207	12338845	STRAP,WEBBING..... UOC:XAA	2
19	PAOZZ	5305011858647	7X677	160057	SCREW,MACHINE #10-32 X 3/4..... UOC:XAA	17
20	PFOZZ	5310011981723	19207	12339998-14	NUT,PLAIN,BLIND RIV #10-32..... UOC:XAA	17
21	PAOZZ	5340011881018	19207	12338829	CAP-PLUG,PROTECTIVE..... UOC:XAA	2

(1) ITEM NO	(2) SMR CODE	(3) NSN	(4) CAGEC	(5) PART NUMBER	(6) DESCRIPTION AND USABLE ON CODES(UOC)	(7) QTY
22	PFFZZ	5320010232529	81349	M24243/1-A404	RIVET,BLIND .125,.188,.250 GRIP.... UOC:XAA	4
23	PFFZZ	5325008235999	13940	XB78323-05001	STUD,TURNBUTTON FAS..... UOC:XAA	2
24	PAOZZ	5365012134239	34623	5585178	SPACER,PLATE..... UOC:XAA	7
25	PAOZZ	5340011867593	19207	12338836-1	LEAF,BUTT HINGE L.H. FRONT AND R.H. REAR..... UOC:XAA	2
26	PAOZZ	5306002264829	80204	B1821BH031C125N	BOLT,MACHINE REAR LOWER HINGE,5/16-18 X 1 1/4..... UOC:XAA	6
27	PAOZZ	5340011856998	19207	12338834-1	LEAF,BUTT HINGE L.H.,LOWER..... UOC:XAA	2
28	PAOZZ	5310008140673	96906	MS51943-33	NUT,SELF-LOCKING,HE REAR LOWER HINGE,5/16-18..... UOC:XAA	6
29	PAOZZ	5306002264827	80204	B1821BH031C100N	BOLT,MACHINE 5/16-18 X 1.00..... UOC:XAA	2
30	PAOZZ	5310000814219	96906	MS27183-12	WASHER,FLAT 5/16..... UOC:XAA	2
31	PAOZZ	5310004079566	96906	MS35338-45	WASHER,LOCK 5/16..... UOC:XAA	2
32	PAOZZ	5310014133276	78276	ALS4-518-150	NUT,PLAIN,BLIND RIV..... UOC:XAA	5
33	MOOZZ		34623	5596172	SEAL LOWER,MAKE FROM SEAL,P/N 68-412121-1,2.88 INCHES LONG..... UOC:XAA	2
34	PAOZZ	2510011987413	19207	12338841-1	HINGE,WINDSHIELD UPPER,L.H..... UOC:XAA	2
35	PAOZZ	5342011867382	19207	12338822-1	HINGE L.H. AND CENTER LOWER..... UOC:XAA	2
36	PAOZZ	5315012052988	19207	12338813	PIN,STRAIGHT,HEADED..... UOC:XAA	5
* 37	PAOZZ	5315011884490	46156	3440035	.PIN..... UOC:XAA	1
38	PAOZZ	5310012097702	7X677	9429048	NUT,PLAIN,HEXAGON HINGE,FRONT, LOWER,5/16-18..... UOC:XAA	6
39	PAOZZ	5310011993440	7X677	9424258	WASHER,LOCK 5/16..... UOC:XAA	6
40	PAOZZ	5305000712509	80204	B1821BH025C150N	SCREW,CAP,HEXAGON H 1/4-20 X 1-3/4. UOC:XAA	2
41	PAOZZ	5310008094058	96906	MS27183-10	WASHER,FLAT 1/4..... UOC:XAA	2
42	PAOZZ	5340011850404	19207	12338824	BUMPER,NONMETALLIC..... UOC:XAA	2
43	PAOZZ	5310000068291	25472	S25-140	NUT,PLAIN,BLIND RIV .3125-18 X .937 UOC:XAA	2
44	PAOZZ	5340011850401	19207	12338835	LEAF,BUTT HINGE CENTER..... UOC:XAA	1
45	PAOZZ	5305009585469	80205	MS35190-305	SCREW,MACHINE 5/16-18 X 7/8..... UOC:XAA	2

(1) ITEM NO	(2) SMR CODE	(3) NSN	(4) CAGEC	(5) PART NUMBER	(6) DESCRIPTION AND USABLE ON CODES(UOC)	(7) QTY
46	PAOZZ	2510014110652	34623	12447029	FRAME,WINDOW,VEHICU..... UOC:XAA	2
47	PAOZZ	5325014110066	78276	ALS4-1024-130	INSERT,SCREW THREAD..... UOC:XAA	8
48	PAOZZ	5310009222017	72582	120217	WASHER,LOCK #10..... UOC:XAA	8
49	PAOZZ	5305002400194	96906	MS51849-76	SCREW,MACHINE #10-24 X 3/4..... UOC:XAA	8
50	PAOZZ	2590011883225	19207	12338843	MOLDING,METAL CENTER..... UOC:XAA	1
51	PAOZZ	5305013615353	24617	9414241	SCREW,TAPPING #10-32 X 3/8..... UOC:XAA	16
52	PAOZZ	2590011891067	19207	12338852	MOLDING,METAL UPPER..... UOC:XAA	2
53	PAOZZ	5330012095997	19207	12338860	SEAL,NONMETALLIC ST..... UOC:XAA	2
54	PAOZZ	9340011853757	19207	12339514	GLASS,LAMINATED..... UOC:XAA	2
55	PAOZZ	5342011850116	19207	12338822-2	HINGE,WIND SHIELD R.H.,LOWER..... UOC:XAA	1

END OF FIGURE

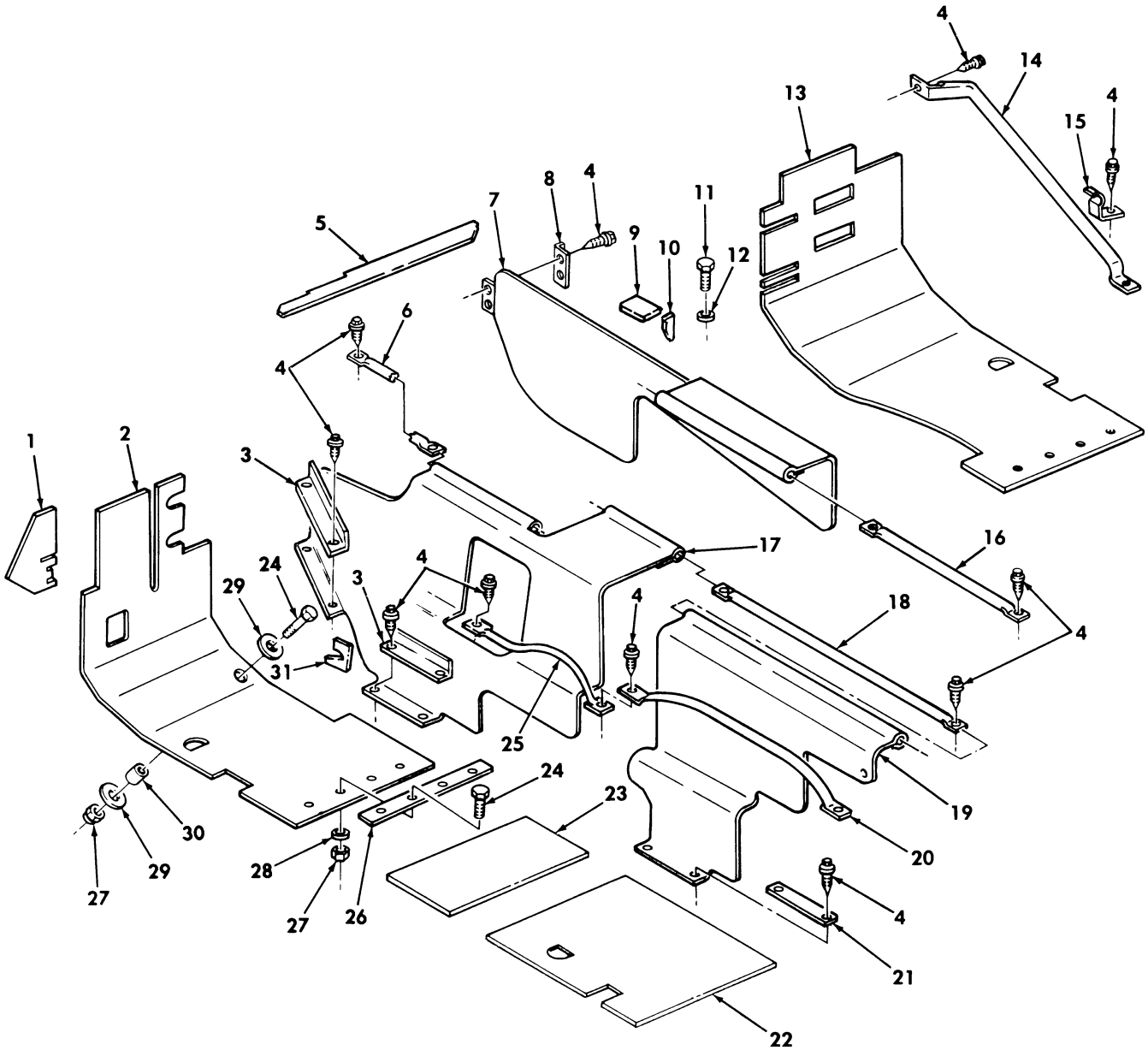

Figure 213. Interior Tunnel, Cowl, Floor Insulation, and Mounting Components (Foam).

(1) ITEM NO	(2) SMR CODE	(3) NSN	(4) CAGEC	(5) PART NUMBER	(6) DESCRIPTION AND USABLE ON CODES(UOC)	(7) QTY
					GROUP 1805 FLOORS AND SUBFLOORS	
					FIG. 213 INTERIOR TUNNEL,COWL,FLOOR INSULATION,AND MOUNTING COMPONENTS (FOAM)	
1	PAOZZ	2510012507597	19207	12338830	INSULATION PANEL,VE OUTER,UPPER, L.H.....	1
2	PAOZZ	2540013835232	9C234	12446700	INSULATION,THERMAL FRONT FLOOR, L.H.....	1
3	PFOZZ	5340012875825	34623	5598103	BRACKET,ANGLE L.H.....	2
4	PAOZZ	5305012596322	34623	12342499-1	SCREW,MACHINE #10-32 X 1/2..... UOC:XAA	15
4	PAOZZ	5305012596322	34623	12342499-1	SCREW,MACHINE #10-32 X 1/2..... UOC:XBB	20
5	PAOZZ	5640013093867	34623	12341888	INSULSATION,FILLER FILLER.....	1
6	PAOZZ	2590014346180	34623	RCSK17759	RETAINER,INSULATION UPPER FRONT, L.H.....	1
7	PAOZZ	2510013357363	19207	12342455	INSULATION PANEL,VE SIDE,R.H.....	1
8	PFOZZ	2590012627707	34623	5594076	MOLDING,METAL FRONT,R.H.....	2
* 9	PAOZZ	5640013093866	34623	12341886	INSULATION,NOZZLE.....	1
10	PAOZZ	5640013093868	34623	12341889	INSULATION,PANEL.....	1
11	PAOZZ	5305009897434	96906	MS35207-263	SCREW,MACHINE.....	1
12	PAOZZ	5310001249265	72582	271169	NUT,PLAIN ASSEMBLED #8-32.....	1
13	PAOZZ	2510012091881	34623	12339908	INSULATION BLANKET FRONT,FLOOR,R.H.	1
14	PFOZZ	4710012547272	19207	12339018	TUBE,BENT METALLIC.....	1
15	PAOZZ	5340012666398	19207	12339438	CLIP,RETAINING R.H.....	1
16	PFOZZ	2590012513070	19207	12339015-1	RETAINER,INSULATION UPPER,R.H.....	1
17	PAOZZ	2540014729343	34623	RCSK17694	INSULATION,THERMAL.....	1
18	PFOZZ	2590012513068	34623	12339015-4	RETAINER,INSULATION UPPER REAR,L.H. UOC:XBB	1
19	PAOZZ	2510012519995	19207	12339039	INSULATION,PANEL,VE INTERMEDIATE REAR,L.H..... UOC:XBB	1
20	PFOZZ	4710012513075	34623	5593947	TUBE,BENT METALLIC INTERMEDIATE REAR,L.H..... UOC:XBB	1
21	PFOZZ	2590012616851	34623	5594077	BEZEL,AUTOMOTIVE TR LOWER REAR,L.H.	1
22	PAOZZ	2540013841012	19207	12446701	INSULATION,THERMAL REAR,L.H..... UOC:XBB	1
22	PAOZZ	2510012507593	19207	12339019	INSULATION,PANEL,VE REAR,R.H..... UOC:XBB	1
23	PAOZZ	2540013841028	19207	12446702	INSULATION,THERMAL..... UOC:XAA	1
23	PAOZZ	2540013841028	19207	12446702	INSULATION,THERMAL..... UOC:XBB	5
24	PAOZZ	5305002253843	80204	B1821BH025C100N	SCREW,CAP HEXAGON H 1/4-20 X 1.00.. UOC:XAA	9
25	PAOZZ	2590014346177	34623	RCSK17758	RETAINER,INSULATION.....	1
26	PFOZZ	2590012633254	34623	5591713	BEZEL,AUTOMOTIVE TR COWL FLOOR,R.H. UOC:XAA	1
26	PFOZZ	2590012627706	34623	5591712	MOLDING,METAL COWL FLOOR,L.H..... UOC:XAA	1

(1) ITEM NO	(2) SMR CODE	(3) NSN	(4) CAGEC	(5) PART NUMBER	(6) DESCRIPTION AND USABLE ON CODES(UOC)	(7) QTY
27	PAOZZ	5310014326727	24617	9419471	NUT,SELF-LOCKING,HE 1/4-20..... UOC:XAA	9
28	PAOZZ	5310008094058	96906	MS27183-10	WASHER,FLAT 1/4..... UOC:XAA	8
29	PAOZZ	5310011992293	7X677	9421394	WASHER,FLAT 1/4..... UOC:XAA	2
30	PAOZZ	5365014772843	19207	12341640	SPACER,STRAIGHT..... UOC:XAA	1
31	PAOZZ	5640013093870	34623	SF-5597693	INSULATION,CLOSEOUT.....	1

END OF FIGURE

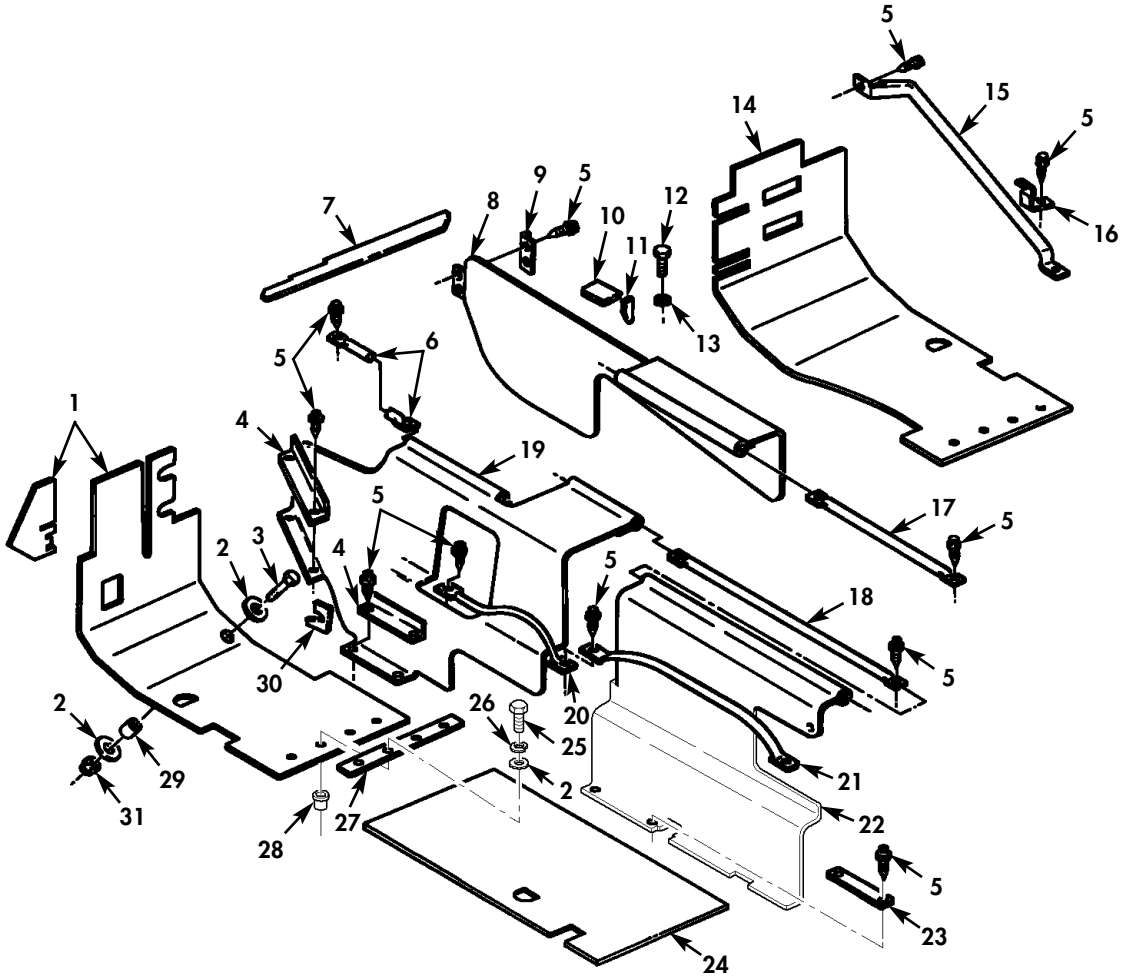

Figure 213A. Interior Tunnel, Cowl, Floor Insulation, and Mounting Components.

(1) ITEM NO	(2) SMR CODE	(3) NSN	(4) CAGEC	(5) PART NUMBER	(6) DESCRIPTION AND USABLE ON CODES(UOC)	(7) QTY
					GROUP 1805 FLOORS AND SUBFLOORS	
					FIG. 213A INTERIOR TUNNEL,COWL,FLOOR INSULATION AND MOUNTING COMPONENTS	
* 1	PAOZZ		34623	6019807	PAD,FOOTWELL L.H.,FRONT W/ARMOR.... UOC:TTA,TTT,TT1,UUA,UUU,UU2	1
* 1	PAOZZ		34623	6020177	PAD,FOOTWELL L.H.,FRONT W/OUT ARMOR UOC:TTA,TTT,TT1,UUA,UUU,UU2	1
* 2	PAOZZ	5310008094058	96906	MS27183-10	WASHER,FLAT 1/4..... UOC:TTA,TTT,TT1,UUA,UUU,UU2	10
* 3	PAOZZ	5305002253843	80204	B1821BH025C100N	SCREW,CAP,HEXAGON H 1/4-20 X 1.00.. UOC:TTA,TTT,TT1,UUA,UUU,UU2	1
* 4	PAOZZ	5340012875825	19207	12341891	BRACKET,ANGLE..... UOC:TTA,TTT,TT1,UUA,UUU,UU2	2
* 5	PAOZZ	5305010065736	19207	12342499-3	SCREW,TAPPING..... UOC:TTA,TTT,TT1,UUA,UUU,UU2	10
* 6	PAOZZ	2590012513071	19207	12339015-2	RETAINER,INSULATION..... UOC:TTA,TTT,TT1,UUA,UUU,UU2	1
* 7	PAOZZ	5640013093867	34623	12341888	INSULATION,FILLER..... UOC:TTA,TTT,TT1,UUA,UUU,UU2	1
* 8	PAOZZ	2510013357363	19207	12342455	PAD,TUNNEL R.H.,FRONT..... UOC:TTA,TTT,TT1,UUA,UUU,UU2	1
* 9	PAOZZ	2590012627707	34623	5594076	MOLDING,METAL,FRONT..... UOC:TTA,TTT,TT1,UUA,UUU,UU2	2
* 10	PAOZZ	5640013093866	34623	12341886	INSULATION,NOZZLE..... UOC:TTA,TTT,TT1,UUA,UUU,UU2	1
* 11	PAOZZ	5640013093868	19207	12341889	INSULATION,PANEL..... UOC:TTA,TTT,TT1,UUA,UUU,UU2	1
* 12	PAOZZ	5305009846212	80205	MS35206-265	SCREW,MACHINE..... UOC:TTA,TTT,TT1,UUA,UUU,UU2	1
* 13	PAOZZ	5310006965172	24617	271166	NUT,PLAIN,ASSEMBLED..... UOC:TTA,TTT,TT1,UUA,UUU,UU2	1
* 14	PAOZZ		34623	6020176	PAD,FOOTWELL R.H.,FRONT W/OUT ARMOR UOC:TTA,TTT,TT1,UUA,UUU,UU2	1
* 14	PAOZZ		34623	6019736	PAD,FOOTWELL R.H.,FRONT W/ARMOR.... UOC:TTA,TTT,TT1,UUA,UUU,UU2	1
* 15	PAOZZ	4710012547272	19207	12339018	TUBE,BENT METALLIC..... UOC:TTA,TTT,TT1,UUA,UUU,UU2	1
* 16	PAOZZ	5340012666398	19207	12339438	CLIP,RETAINNG..... UOC:TTA,TTT,TT1,UUA,UUU,UU2	1
* 17	PAOZZ	2590012578788	19207	12339015-5	RETAINER,INSULATION..... UOC:TTA,TTT,TT1,UUA,UUU,UU2	1
* 18	PAOZZ	2590012513068	19207	12339015-4	RETAINER,INSULATION..... UOC:TTA,TTT,TT1,UUA,UUU,UU2	1
* 19	PAOZZ		34623	6019818	PAD,TUNNEL L.H.,FRONT..... UOC:TTA,TTT,TT1,UUA,UUU,UU2	1
* 20	PAOZZ	4710012513073	19207	12340828	TUBE,BENT METALLIC..... UOC:TTA,TTT,TT1,UUA,UUU,UU2	1
* 21	PAOZZ	4710012513075	34623	5593947	TUBE,BENT METALLIC..... UOC:TTA,TTT,TT1,UUA,UUU,UU2	1
* 22	PAOZZ	2510015603945	34623	6019813	INSULATION,TUNNEL R.H.,REAR..... UOC:TTA,TTT,TT1,UUA,UUU,UU2	1

(1) ITEM NO	(2) SMR CODE	(3) NSN	(4) CAGEC	(5) PART NUMBER	(6) DESCRIPTION AND USABLE ON CODES(UOC)	(7) QTY
* 22	PAOZZ		34623	6019769	INSULATION,TUNNEL L.H.,REAR..... UOC:TTA,TTT,TT1,UUA,UUU,UU2	1
* 23	PAOZZ	2590012616851	34623	5594077	BEZEL,AUTOMOTIVE TR..... UOC:TTA,TTT,TT1,UUA,UUU,UU2	2
* 24	PAOZZ	2540015602757	34623	6019768	INSULATION L.H.,REAR FLOOR..... UOC:TTA,TTT,TT1,UUA,UUU,UU2	1
* 24	PAOZZ		34623	6015515	INSULATION R.H.,REAR FLOOR..... UOC:TTA,TTT,TT1,UUA,UUU,UU2	1
* 25	PAOZZ	5305000680509	80204	B1821BH025C125N	SCREW,CAP,HEXAGON H 1/4-20 X 1.25.. UOC:TTA,TTT,TT1,UUA,UUU,UU2	8
* 26	PAOZZ	5310005825965	80205	MS35338-44	WASHER,LOCK 1/4..... UOC:TTA,TTT,TT1,UUA,UUU,UU2	1
* 27	PAOZZ	2590012633254	19207	12338838-2	RETAINER,INSULATION..... UOC:TTA,TTT,TT1,UUA,UUU,UU2	2
* 28	PAOZZ	5310014113422	78276	ALS4-420-165	NUT,PLAIN,BLIND RIV..... UOC:TTA,TTT,TT1,UUA,UUU,UU2	8
* 29	PAOZZ	5365014773867	19207	12341640	SPACER,SLEEVE..... UOC:TTA,TTT,TT1,UUA,UUU,UU2	1
* 30	PAOZZ	5640013093870	34623	12341887	INSULATION,CLOSEOUT..... UOC:TTA,TTT,TT1,UUA,UUU,UU2	1
* 31	PAOZZ	5310014326727	24617	9419471	NUT,SELF-LOCKING 1/4-20..... UOC:TTA,TTT,TT1,UUA,UUU,UU2	1

END OF FIGURE

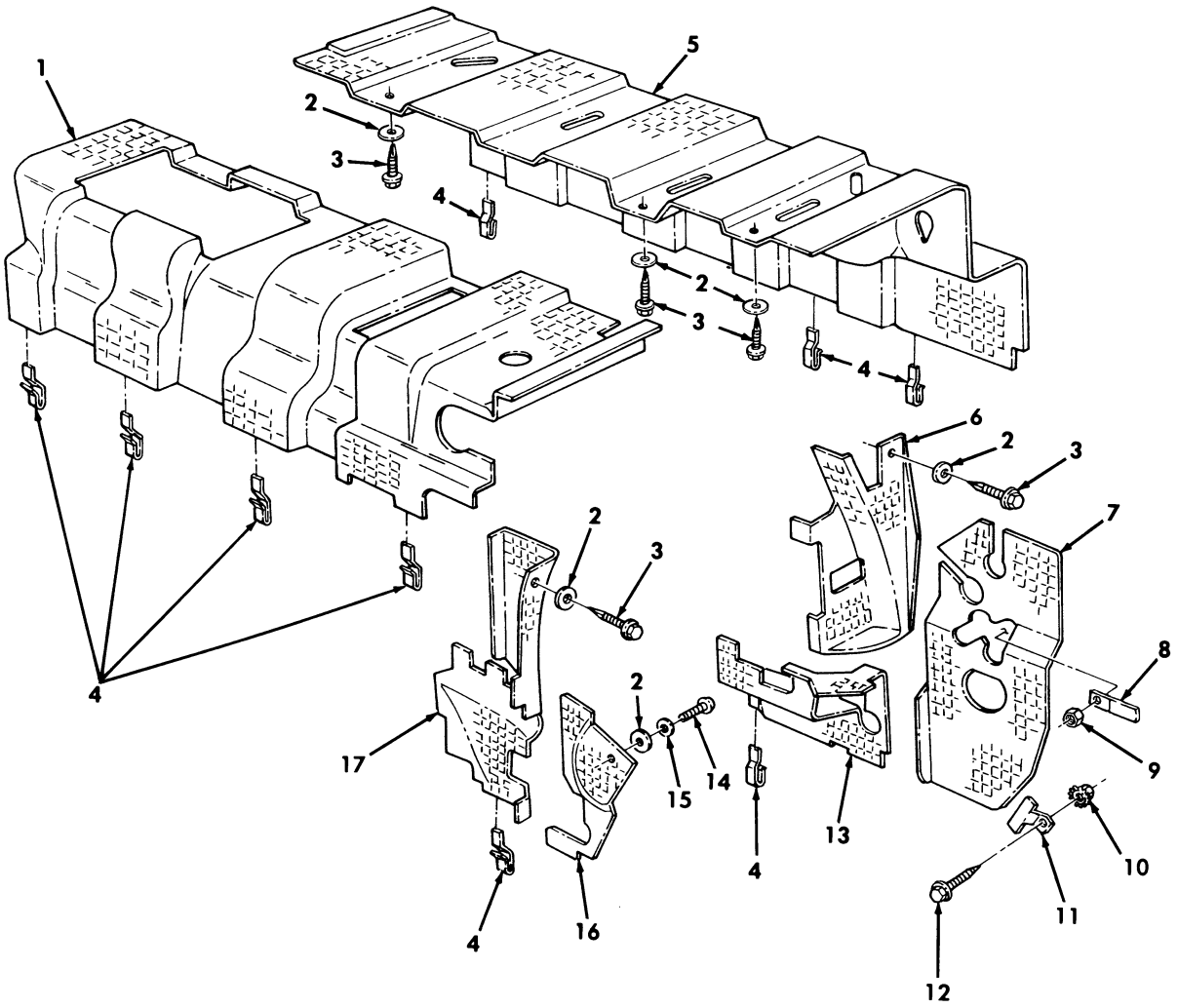

Figure 214. Underbody Insulation.

(1) ITEM NO	(2) SMR CODE	(3) NSN	(4) CAGEC	(5) PART NUMBER	(6) DESCRIPTION AND USABLE ON CODES(UOC)	(7) QTY
					GROUP 1805 FLOORS AND SUBFLOORS	
					FIG. 214 UNDERBODY INSULATION	
* 1	PAFZZ	2540014729902	0RTH0	ECV-02	INSULATION,THERMAL L.H. REAR.....	1
* 2	PAFZZ	5310014987962	34623	12469397	WASHER,FLAT .25 X 1.24.....	6
* 3	PAFZZ	5305014988398	34623	6001002	SCREW,TAPPING .250-14 X 1.25.....	5
* 4	PAFZZ	5340015010316	34623	6000949	CLIP,SPRING TENSION RETAINER.....	11
5	PAFZZ	2540014731048	0RHT0	ECV-01	INSULATION,THERMAL R.H. REAR.....	1
* 6	PAFZZ	2540014729914	0RTH0	ECV-09	INSULATION,THERMAL L.H..... UOC:XAA	1
* 6	PAFZZ	2540014730354	0RTH0	ECV-08	INSULATION,THERMAL L.H..... UOC:XBB	1
* 7	PAFZZ	2540014730361	0RTH0	ECV-06	INSULATION,THERMAL L.H.....	1
* 8	PAFZZ	5340014992719	34623	6000948	STRAP,RETAINING.....	1
9	PAFZZ	5310011520598	24617	271172	NUT,SELF-LOCKING,AS 1/4-20.....	1
10	PAFZZ	5310001249265	24617	271169	NUT,PLAIN,ASSEMBLED #10-32.....	1
* 11	PAFZZ	5340014984369	34623	6000947	BRACKET,MOUNTING.....	1
12	PAFZZ	5305005829501	82386	410-63	SCREW,CAP HEXAGON H #10-32 X 1/2...	1
* 13	PAFZZ	2540014730362	0RTH0	ECV-05	INSULATION,THERMAL L.H. FRONT.....	1
14	PAFZZ	5305004119287	24617	274824	SCREW #10-32 X 1.00.....	1
15	PAFZZ	5310000145850	96906	MS27183-42	WASHER,FLAT.....	1
* 16	PAFZZ	2540014730367	0RTH0	ECV-04	INSULATION,THERMAL R.H.....	1
* 17	PAFZZ	2540014730368	0RTH0	ECV-03	INSULATION,THERMAL R.H. FRONT..... UOC:XBB	1
* 17	PAFZZ	2540014730369	0RTH0	ECV-07	INSULATION,THERMAL R.H. FRONT..... UOC:XAA	1

END OF FIGURE

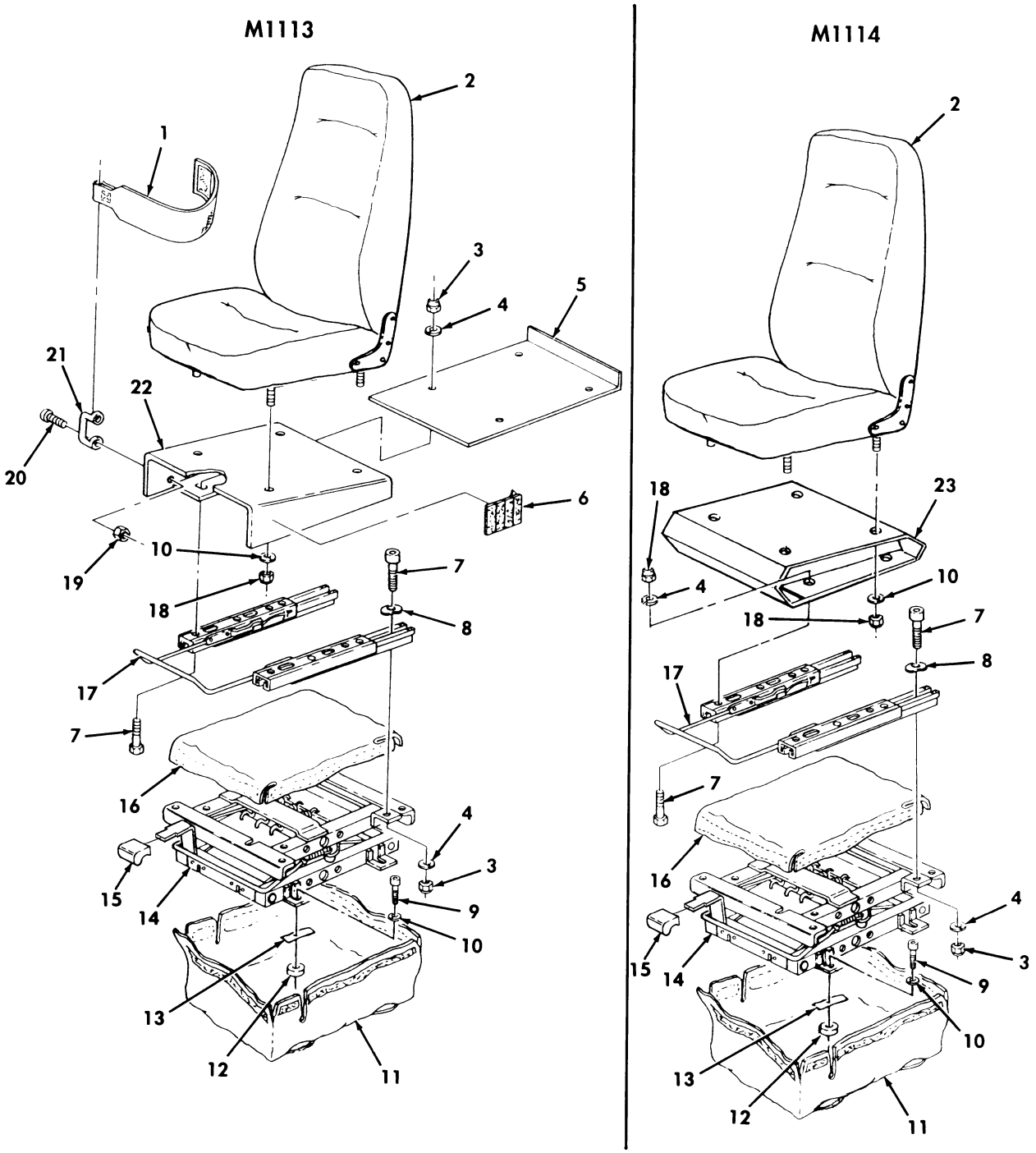

Figure 215. Driver's Seat and Related Parts.

(1) ITEM NO	(2) SMR CODE	(3) NSN	(4) CAGEC	(5) PART NUMBER	(6) DESCRIPTION AND USABLE ON CODES(UOC)	(7) QTY
					GROUP 1806 UPHOLSTERY SEATS AND CARPET	
					FIG. 215 DRIVER'S SEAT AND RELATED PARTS	
1	PAOZZ	5340013870090	19207	12446724	STRAP,WEBBING..... UOC:XAA	1
* 2	PAOZZ	2540015168369	32783	12446712-1	SEAT,VEHICULAR..... UOC:XAA	1
* 2	PAOZZ	2540014364175	62226	8.6272-01	SEAT,VEHICULAR..... UOC:XBB	1
3	PAOZZ	5310011193668	24617	9422295	NUT,SELF-LOCKING,CO 5/16-20..... UOC:XAA	8
3	PAOZZ	5310011193668	24617	9422295	NUT,SELF-LOCKING,CO 5/16-20..... UOC:XBB	4
4	PAOZZ	5310011191024	24617	2436162	WASHER,FLAT 5/16.....	8
5	PAOZZ	2540014473457	34623	12446709	SUPPORT,SEAT,VEHICU..... UOC:XAA	1
6	MOOZZ		19207	12331924-6	FASTENER,TAPE MAKE FROM FASTENER, TAPE,P/N 100-080-330-0140,2 INCHES LONG..... UOC:XAA	1
7	PAOZZ	5305013812296	24617	9421705	SCREW,CAP,SOCKET HE 5/16-18 X 3/4..	8
8	PAOZZ	5310014723763	19207	12446954	WASHER,LOCK.....	4
9	PAOZZ	5306002264826	72582	186625	BOLT,MACHINE 5/16-18 X 7/8.....	4
10	PAOZZ	5310004079566	96906	MS35338-45	WASHER,LOCK 5/16.....	8
11	PAOZZ	2540013815397	9C234	12446748	BAG,SEAT ADJUSTER.....	1
12	PAOZZ	5310011191024	24617	2436162	WASHER,FLAT 5/16.....	4
13	MOOZZ		19207	12339376-1-AR	TAPE,PRESSURE SENSI MAKE FROM TAPE, P/N 12339376-1,LENGTH AS NEEDED.....	V
14	PAOZZ	2540013818988	34623	12446714	ADJUSTER,VEHICULAR.....	1
* 15	PAOZZ	5355014815517	62226	34068-02	KNOB.....	1
16	PAOZZ	2540013812079	34623	12446747	COVER,SEAT,VEHICULA.....	1
* 17	PAOZZ	2540013819331	62226	0.1581	ADJUSTER,VEHICULAR.....	1
18	PAOZZ	5310012097702	7X677	9429048	NUT,PLAIN,HEXAGON 5/16-18.....	4
19	PAOZZ	5310001249265	72582	271169	NUT,PLAIN,ASSEMBLED #10-32..... UOC:XAA	2
20	PAOZZ	5305013812305	24617	157125	SCREW,MACHINE #10-32 X .62..... UOC:XAA	2
21	PAOZZ	5340013145957	19207	12338839-1	LOOP,STRAP FASTENER..... UOC:XAA	1
22	PFOZZ	2540013835660	19207	12343053	SEAT,VEHICULAR..... UOC:XAA	1
23	PAOZZ	5340014463124	54786	105600-001	BRACKET,SEAT..... UOC:XBB	1

END OF FIGURE

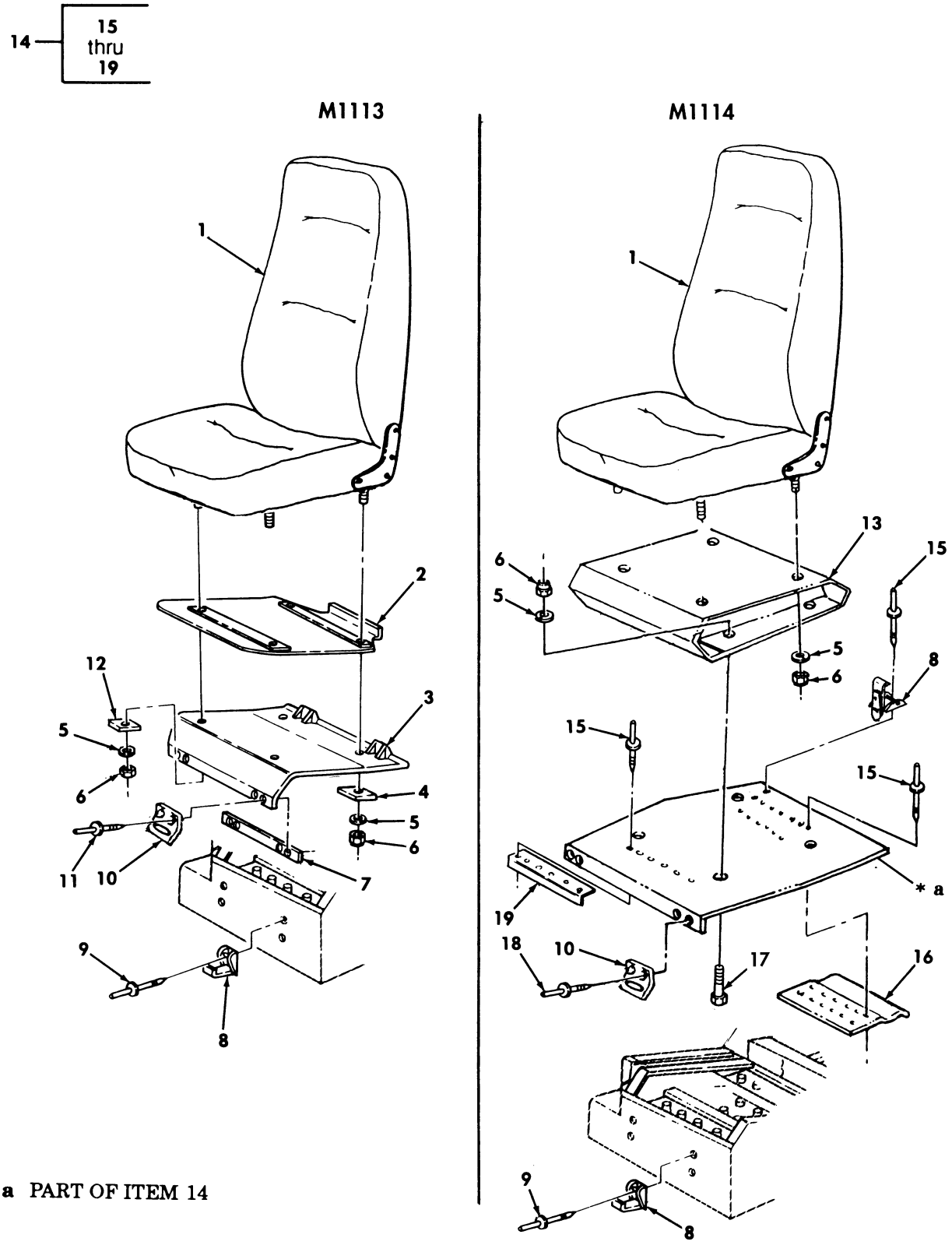

* a PART OF ITEM 14

Figure 216. Commander's Seat and Related Parts.

(1) ITEM NO	(2) SMR CODE	(3) NSN	(4) CAGEC	(5) PART NUMBER	(6) DESCRIPTION AND USABLE ON CODES(UOC)	(7) QTY
					GROUP 1806 UPHOLSTERY SEATS AND CARPET	
					FIG. 216 COMMANDER'S SEAT AND RELATED PARTS	
* 1	PAOZZ	2540013818392	62226	8.6046-01	SEAT,VEHICULAR COMMANDER'S GREEN... UOC:XAA	1
* 1	PAOZZ	2540014364175	62226	8.6272-01	SEAT,VEHICULAR COMMANDER'S GREEN... UOC:XBB	1
* 1	PAOZZ	2540015168389	62226	8.6046-02	SEAT,VEHICULAR COMMANDER'S TAN..... UOC:XAA	1
* 1	PAOZZ	2540014769353	62226	8.6272-02	SEAT,VEHICULAR COMMANDER'S TAN..... UOC:XBB	1
2	PAOZZ	6160013840325	19207	12446737	COVER,BATTERY BOX..... UOC:XAA	1
3	PAOZZ	6160013843922	19207	12343059	BATTERY BOX..... UOC:XAA	1
4	PAOZZ	5365013807340	19207	12446735	SPACER,TAPERED..... UOC:XAA	2
5	PAOZZ	5310011191024	24617	2436162	WASHER,FLAT 5/16..... UOC:XAA	4
5	PAOZZ	5310011191024	24617	2436162	WASHER,FLAT 5/16..... UOC:XBB	8
* 6	PAOZZ	5310013815328	24617	12338130	NUT,PLAIN,HEXAGON 5/16-18..... UOC:XAA	4
* 6	PAOZZ	5310013815328	24617	12338130	NUT,PLAIN,HEXAGON 5/16-18..... UOC:XBB	8
7	PAOZZ	2590012615485	24623	5591553	MOLDING,METAL..... UOC:XAA	1
* 8	PAOZZ	5340014088508	71286	20L56-1-1AF	CATCH,CLAMPING..... UOC:XAA	2
* 8	PAOZZ	5340014088508	72186	20L56-1-1AF	CATCH,CLAMPING..... UOC:XBB	3
9	PAOZZ	5320012716357	19207	12339355-1	RIVET,BLIND 3/16 DIA,.062-.270 GRIP	4
10	PAOZZ	5340010874612	71286	20L02-1-1AA	STRIKE,CATCH.....	3
11	PAOZZ	5320014355079	80205	NAS9301BNS-4-04	RIVET,BLIND 1/8 DIA.,.188-.250 GRIP UOC:XAA	4
12	PAOZZ	5365013821178	19207	12446736	SPACER,TAPERED..... UOC:XAA	2
13	PAOZZ	5340014499309	54786	105610-001	BRACKET,MOUNTING..... UOC:XBB	1
14	PAOZZ	6160014726362	34623	RCSK17542G1	COVER,BATTERY BOX..... UOC:XBB	1
15	PAOZZ	5320012716357	9K475	MGLP-B6-4	.RIVET,BLIND 3/16..... UOC:XBB	20
16	PAOZZ	2590014732700	19207	12446968	.BRACKET,VEHICULAR C..... UOC:XBB	1
* 17	PAOZZ	5306014206039	6W728	4397015-107	.BOLT,MACHINE 5/16-18 X 7/8..... UOC:XBB	4
18	PAOZZ	5320011435079	80205	NAS9301BNS-4-04	.RIVET,BLIND 1/4..... UOC:XBB	4
19	PAOZZ	2590014730566	34623	RCSK18197	.BRACKET,VEHICULAR C..... UOC:XBB	1

END OF FIGURE

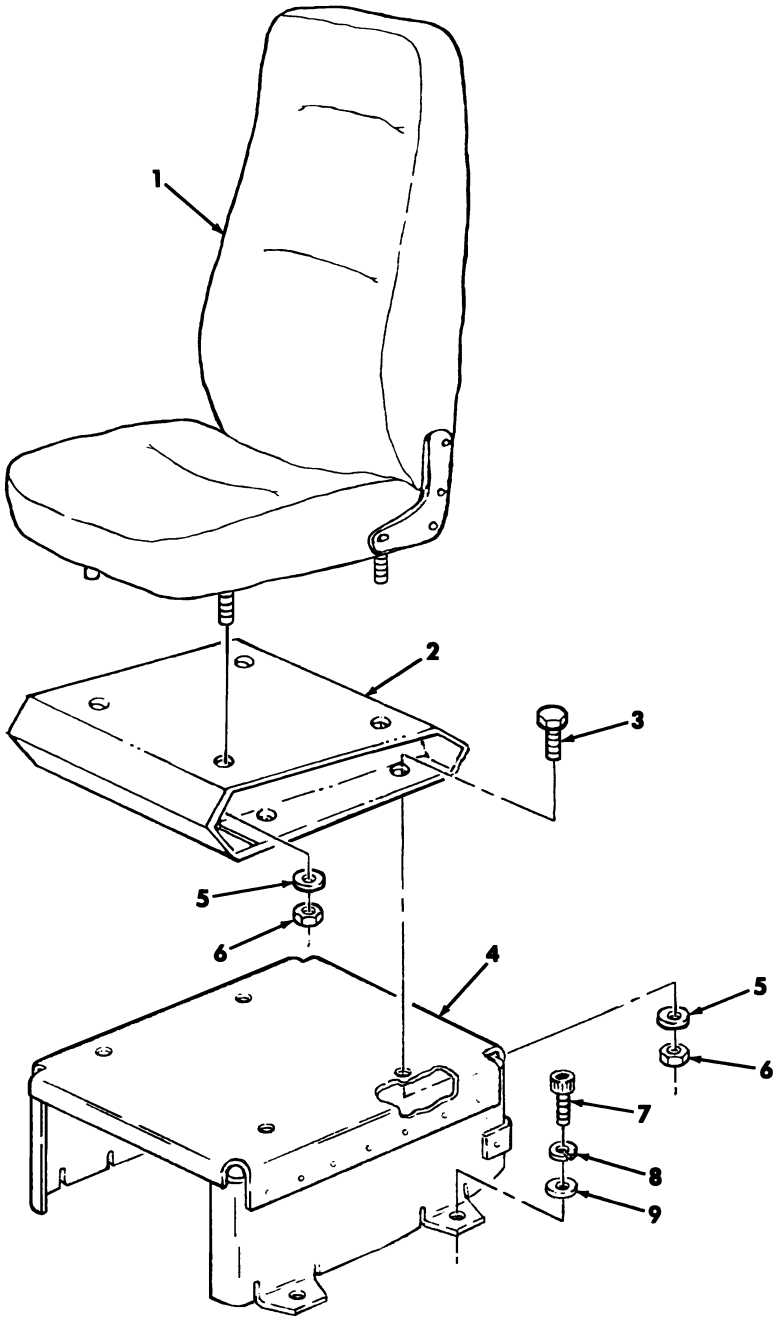

Figure 217. Rear Seat, Mounting Hardware, and Related Parts.

(1) ITEM NO	(2) SMR CODE	(3) NSN	(4) CAGEC	(5) PART NUMBER	(6) DESCRIPTION AND USABLE ON CODES(UOC)	(7) QTY
					GROUP 1806 UPHOLSTERY SEATS AND CARPET	
					FIG. 217 REAR SEAT,MOUNTING HARDWARE, AND RELATED PARTS	
* 1	PAOZZ	2540014364175	62226	8.6272-01	SEAT,VEHICULAR GREEN..... UOC:XBB	2
* 1	PAOZZ	2540014769353	62226	8.6272-02	SEAT,VEHICULAR TAN..... UOC:XBB	2
2	PAOZZ	5340014499309	54786	105610-001	BRACKET,MOUNTING..... UOC:XBB	2
3	PAOZZ	5306002264827	80204	B1821BH031C100N	BOLT,MACHINE 5/16-18 X 1.00..... UOC:XBB	8
4	PAOZZ	2540014368436	19207	12469209	SUPPORT,SEAT,VEHICU REAR..... UOC:XBB	2
5	PAOZZ	5310000814219	96906	MS27183-12	WASHER,FLAT 5/16..... UOC:XBB	16
6	PAOZZ	5310008140673	96906	MS51943-33	NUT,SELF-LOCKING,HE 5/16-18..... UOC:XBB	16
7	PAOZZ	5306014206039	6W728	4397015-107	BOLT,MACHINE 5/16-18 X 7/8..... UOC:XBB	8
* 8	PAOZZ	5310014179942	6W728	4397004-007	WASHER,LOCK .322 X .583 X .078..... UOC:XBB	8
* 9	PAOZZ	5310014727216	6W728	4397005-076	WASHER,FLAT 5/16..... UOC:XBB	8

END OF FIGURE

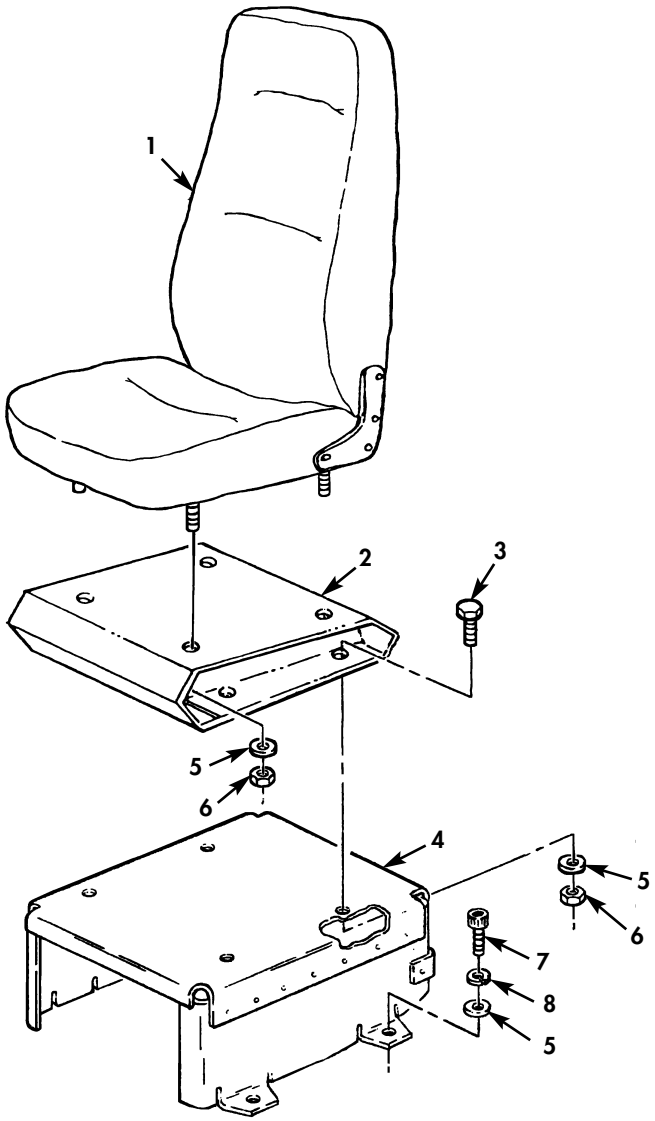

Figure 217A. Rear Seats.

(1) ITEM NO	(2) SMR CODE	(3) NSN	(4) CAGEC	(5) PART NUMBER	(6) DESCRIPTION AND USABLE ON CODES(UOC)	(7) QTY
					GROUP 1806 UPHOLSTERY SEATS AND CARPET	
					FIG. 217A REAR SEATS	
* 1	PAOZZ	2540014364175	62226	8.6272-01	SEAT,VEHIULAR GREEN..... UOC:TTA,TTT,TT1,UUA,UUU,UU1,UU2	2
* 1	PAOZZ	2540014769353	62226	8.6272-02	SEAT,VEHICULAR TAN..... UOC:TTA,TTT,TT1,UUA,UUU,UU1,UU2	2
* 2	PAOZZ	5340014499309	54786	105610-1	BRACKET,MOUNTING..... UOC:TTA,TTT,TT1,UUA,UUU,UU1,UU2	2
* 3	PAOZZ	5306002264827	80204	B1821BH031C100N	BOLT,MACHINE 5/16-18 X 1.00..... UOC:TTA,TTT,TT1,UUA,UUU,UU1,UU2	8
* 4	PAOZZ	2540015602570	34623	6015441	BASE,SEAT VHICU REAR..... UOC:TTA,TTT,TT1,UUA,UUU,UU1,UU2	2
* 5	PAOZZ	5310011191024	24617	2436162	WASHER,FLAT 5/16..... UOC:TTA,TTT,TT1,UUA,UUU,UU1,UU2	16
* 6	PAOZZ	5310008140673	96906	MS51943-33	NUT,SELF-LOCKING,HE 5/16-18..... UOC:TTA,TTT,TT1,UUA,UUU,UU1,UU2	16
* 7	PAOZZ	5306002264826	72582	186625	BOLT,MACHINE 5/16-18 X 7/8..... UOC:TTA,TTT,TT1,UUA,UUU,UU1,UU2	8
* 8	PAOZZ	5310004079566	80205	MS35338-45	WASHER,LOCK 5/16..... UOC:TTA,TTT,TT1,UUA,UUU,UU1,UU2	8

END OF FIGURE

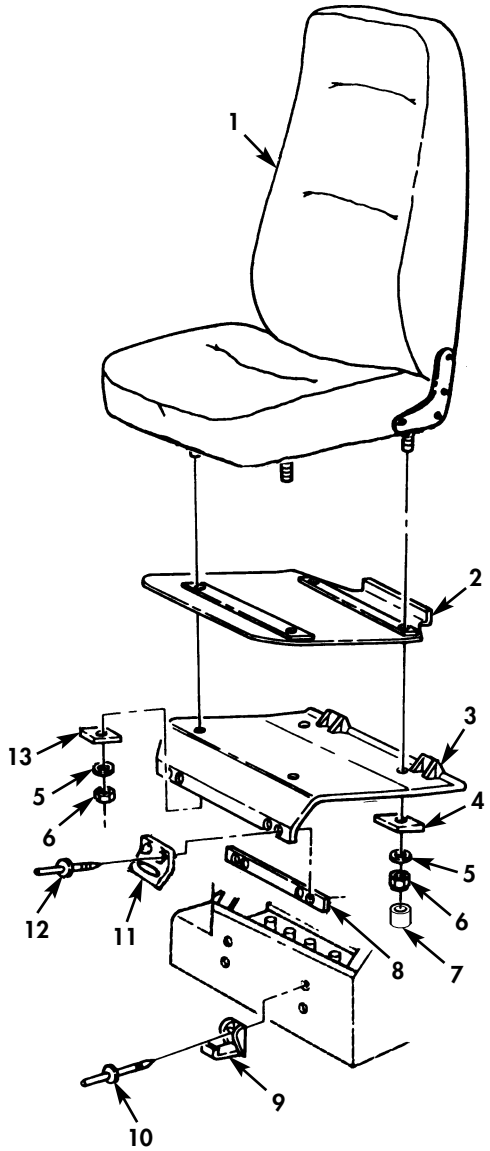

Figure 217B. Commander's Seat.

(1) ITEM NO	(2) SMR CODE	(3) NSN	(4) CAGEC	(5) PART NUMBER	(6) DESCRIPTION AND USABLE ON CODES(UOC)	(7) QTY
					GROUP 1806 UPHOLSTERY SEATS AND CARPET	
					FIG. 217B COMMANDER'S SEAT	
* 1	PAOZZ		19207	6023991	SEAT ASSEMBLY, ENERGY ABSORBING..... UOC:TTA,TTT,TT1,UUA,UUU,UU1,UU2	1
* 2	PAOZZ	6160013840325	19207	12446737	COVER,BATTERY BOX..... UOC:TTA,TTT,TT1,UUA,UUU,UU1,UU2	1
* 3	PAOZZ	6160013843922	19207	12343059	BATTERY BOX..... UOC:TTA,TTT,TT1,UUA,UUU,UU1,UU2	1
* 4	PAOZZ	5365013807340	19207	12446735	SPACER,TAPERED..... UOC:TTA,TTT,TT1,UUA,UUU,UU1,UU2	2
* 5	PAOZZ	5310004079566	80205	MS35338-45	WASHER,LOCK 5/16..... UOC:TTA,TTT,TT1,UUA,UUU,UU1,UU2	4
* 6	PAOZZ	5310009318167	96906	MS51967-6	NUT,PLAIN 5/16-18..... UOC:TTA,TTT,TT1,UUA,UUU,UU1,UU2	4
* 7	PAOZZ	5340015604006	34623	5934816	THREAD PROTECTOR..... UOC:TTA,TTT,TT1,UUA,UUU,UU1,UU2	4
* 8	PAOZZ	2590012615485	34623	5591553	MOLDING,METAL..... UOC:TTA,TTT,TT1,UUA,UUU,UU1,UU2	1
* 9	PA0ZZ	5340011971294	29372	20L01-1-1AF	CATCH,CLAMPING..... UOC:TTA,TTT,TT1,UUA,UUU,UU1,UU2	2
* 10	PAOZZ	5320012716357	19207	12339355-1	RIVET,BLIND 3/16 DIA,.62-.270 GRIP. UOC:TTA,TTT,TT1,UUA,UUU,UU1,UU2	4
* 11	PAOZZ	5340010874612	71286	20L02-1-1AA	STRIKE,CATCH..... UOC:TTA,TTT,TT1,UUA,UUU,UU1,UU2	3
* 12	PAOZZ	5320014355079	80205	NAS9301BNS-4-04	RIVET,BLIND 1/8 DIA.,.188-.250 GRIP UOC:TTA,TTT,TT1,UUA,UUU,UU1,UU2	4
* 13	PAOZZ	5365013821178	19207	12446736	SPACER,TAPERED..... UOC:TTA,TTT,TT1,UUA,UUU,UU1,UU2	2

END OF FIGURE

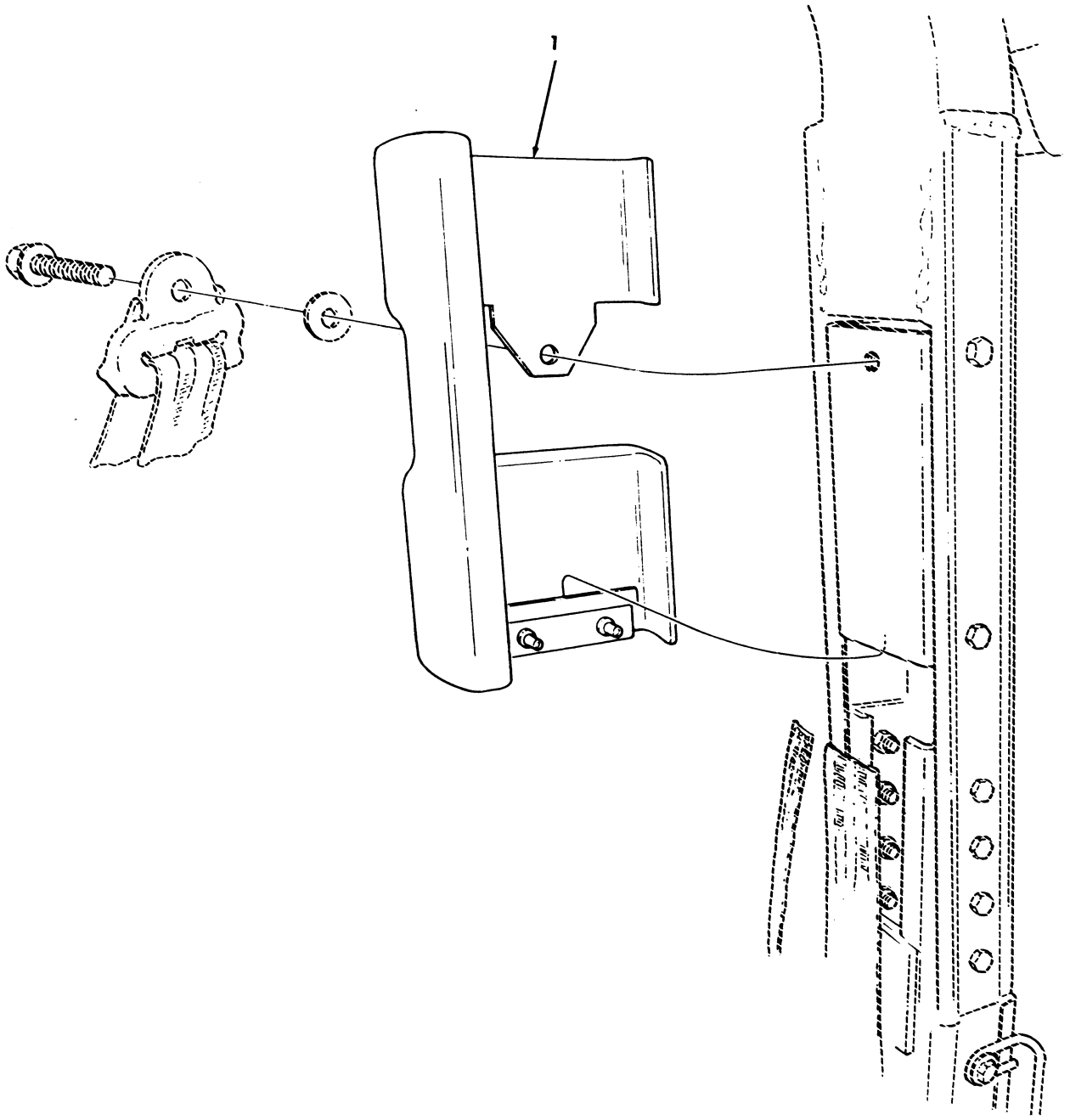

Figure 218. Protective Padding on B-Pillar Cover.

(1) ITEM NO	(2) SMR CODE	(3) NSN	(4) CAGEC	(5) PART NUMBER	(6) DESCRIPTION AND USABLE ON CODES(UOC)	(7) QTY
					GROUP 1806 UPHOLSTERY SEATS AND CARPET	
					FIG. 218 PROTECTIVE PADDING ON B-PILLAR COVER	
1	PAOZZ	2590013961422	9C234	12342954	PAD,CUSHIONING B PILLAR,R.H..... UOC:XBB	1
1	PAOZZ	2590013961424	9C234	12342955	PAD,CUSHIONING B PILLAR,L.H..... UOC:XBB	1

END OF FIGURE

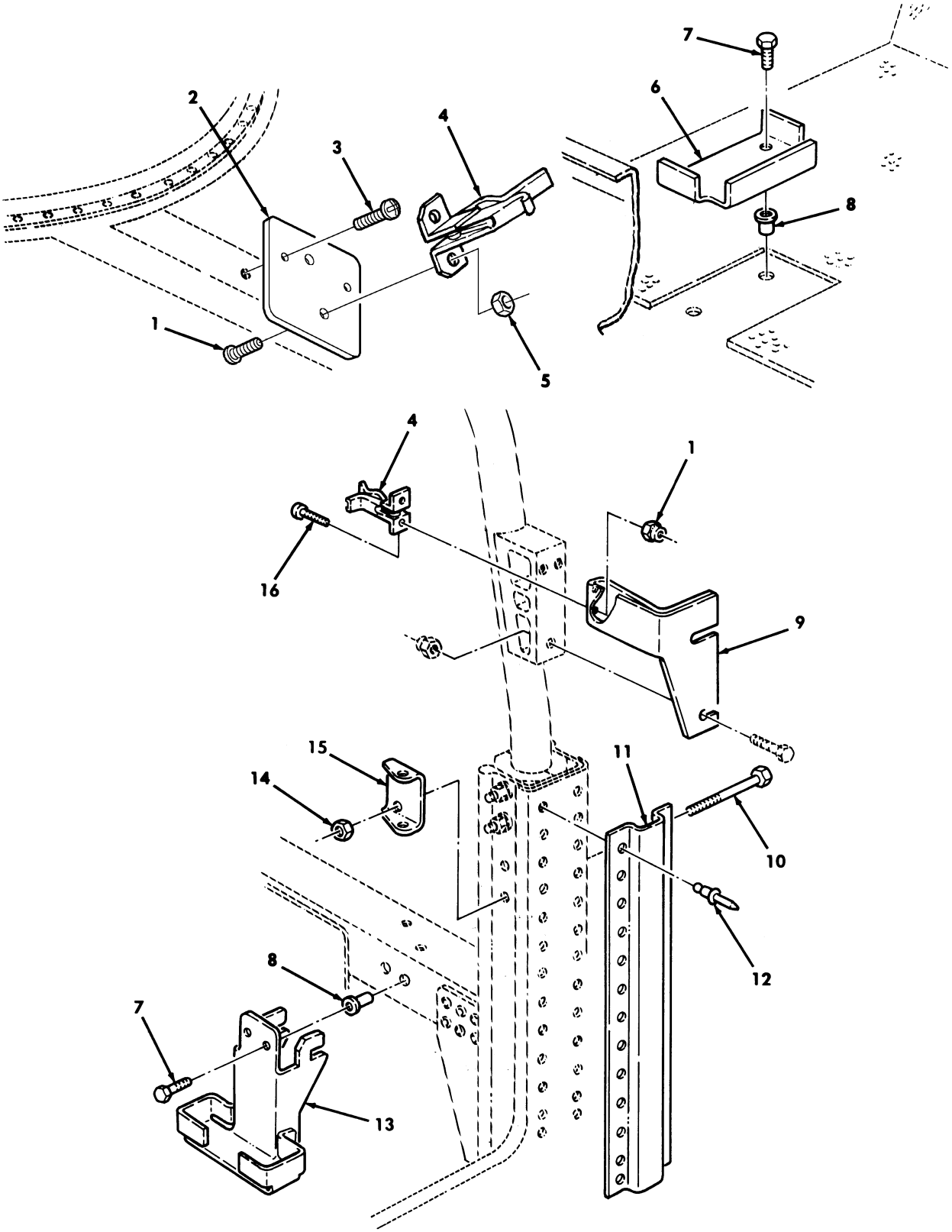

Figure 219. Gunmount Brackets and Related Parts – M1114.

(1) ITEM NO	(2) SMR CODE	(3) NSN	(4) CAGEC	(5) PART NUMBER	(6) DESCRIPTION AND USABLE ON CODES(UOC)	(7) QTY
					GROUP 1806 UPHOLSTERY SEATS AND CARPET	
					FIG. 219 GUNMOUNT BRACKETS AND RELATED PARTS-M1114	
1	PAOZZ	5305014381201	6W728	4397012-072	SCREW,MACHINE .190-24 X 3.50..... UOC:XBB	2
2	PAOZZ	5340014338421	6W728	4660740	PLATE,MOUNTING UPPER LEFT SIDE..... UOC:XBB	1
3	PAOZZ	5305014398170	6W728	4397014-070	SCREW,MACHINE .190-32 X .375..... UOC:XBB	2
4	PAOZZ	1015012000869	19207	12340487	CLAMP,LOCKING,RECOI..... UOC:XBB	2
5	PAOZZ	5310014398180	6W728	4397073-003	NUT,SELF-LOCKING,HE .190-32..... UOC:XBB	4
6	PFOZZ	5340014411727	6W728	4660112	BRACKET,MULTIPLE AN..... UOC:XBB	1
* 7	PAOZZ	5305002253843	80204	B1821BH025C100N	SCREW,CAP HEXAGON H .250-20 X 1.00. UOC:XBB	4
8	PAOZZ	5325013942414	78276	ALS7-420-165	INSERT,SCREW THREAD .250-20..... UOC:XBB	4
9	PAOZZ	5340014324426	6W728	4660736	BRACKET,MOUNTING R.H..... UOC:XBB	1
10	PAOZZ	5306014339214	6W728	4397000-049	BOLT,MACHINE .313-18 X 4.25..... UOC:XBB	4
11	PAOZZ	5340014176475	6W728	4668503	BRACKET,MULTIPLE AN L.H..... UOC:XBB	1
11	PAOZZ	5340014176480	6W728	4668504	BRACKET,MULTIPLE AN R.H..... UOC:XBB	1
12	PAOZZ	5320014400320	6W728	4397081-010	RIVET,BLIND .250-20 X .375..... UOC:XBB	52
13	PAOZZ	5340012477918	19207	12340164	BRACKET,MOUNTING..... UOC:XBB	1
14	PAOZZ	5310014398172	6W728	4397064-003	NUT,SELF-LOCKING,HE .313-18..... UOC:XBB	4
15	PAOZZ	5340014384498	6W728	4668646	BRACKET,DOUBLE ANGL..... UOC:XBB	2
16	PAOZZ	5305014340832	6W728	4397013-070	SCREW,MACHINE .190-32 X .375..... UOC:XBB	2

END OF FIGURE

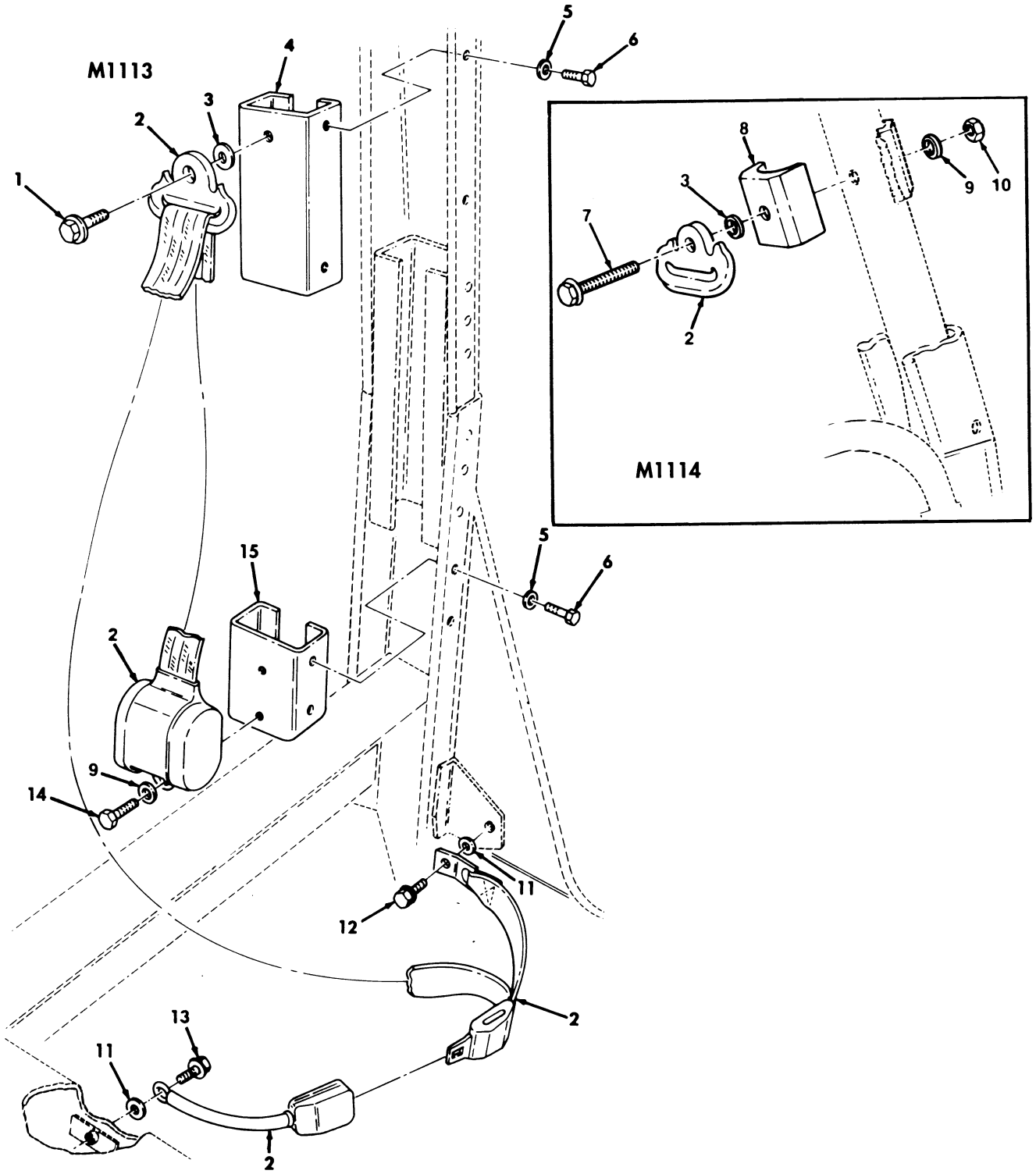

Figure 220. Front Seat Belts, Brackets, and Mounting Hardware.

(1) ITEM NO	(2) SMR CODE	(3) NSN	(4) CAGEC	(5) PART NUMBER	(6) DESCRIPTION AND USABLE ON CODES(UOC)	(7) QTY
					GROUP 1806 UPSHOLSTERY SEATS AND CARPET	
					FIG. 220 FRONT SEATBELTS,BRACKETS, AND MOUNTING HARDWARE	
1	PAOZZ	5306013162433	19207	12340259-7	BOLT,SHOULDER SEAT BELT,7/16-20 X 1.00..... UOC:XAA	2
2	PAOZZ	2540013153358	7X868	E19250-00	BELT,VEHICULAR,SAFE DRIVER.....	1
2	PAOZZ	2540013153143	29944	F07011	BELT,VEHICULAR SAFE COMMANDER.....	1
3	PAOZZ	5310012866077	19207	12341856	WASHER,FLAT 7/16.....	2
4	PFOZZ	2590013949672	9C234	12342683	BRACKET,VEHICULAR C..... UOC:XAA	2
5	PAOZZ	5310011191024	24617	2436162	WASHER,FLAT 5/16.....	16
* 6	PAOZZ	5306002264825	80204	B1821BH031C075N	BOLT,MACHINE 5/16-18 X .750.....	16
7	PAOZZ	5306013157088	19207	12340259-4	BOLT,SHOULDER ROLLBAR BRACKET,7/16-20 X .47..... UOC:XBB	2
8	PAOZZ	5340013335851	19207	12342381	STRAP,RETAINING..... UOC:XBB	2
9	PAOZZ	5310008094085	96906	MS27183-16	WASHER,FLAT 7/16..... UOC:XAA	2
9	PAOZZ	5310008094085	96906	MS27183-16	WASHER,FLAT 7/16..... UOC:XBB	4
10	PAOZZ	5310013153403	24617	9442938	NUT,SELF-LOCKING,HE ROLLBAR BRACKET 7/16-20..... UOC:XBB	2
11	PAOZZ	5310012538437	19207	12340058	WASHER,FLAT 7/16.....	4
12	PAOZZ	5306013161456	19207	12340259-6	BOLT,SHOULDER.....	2
13	PAOZZ	5306013157086	19207	12340259-3	BOLT,SHOULDER.....	2
14	PAOZZ	5305007098283	96906	MS90727-84	SCREW,CAP HEXAGON H 7/16-20 X 3/4..	2
15	PFOZZ	5340013344241	19207	12342372	BRACKET,DOUBLE ANGLE.....	2

END OF FIGURE

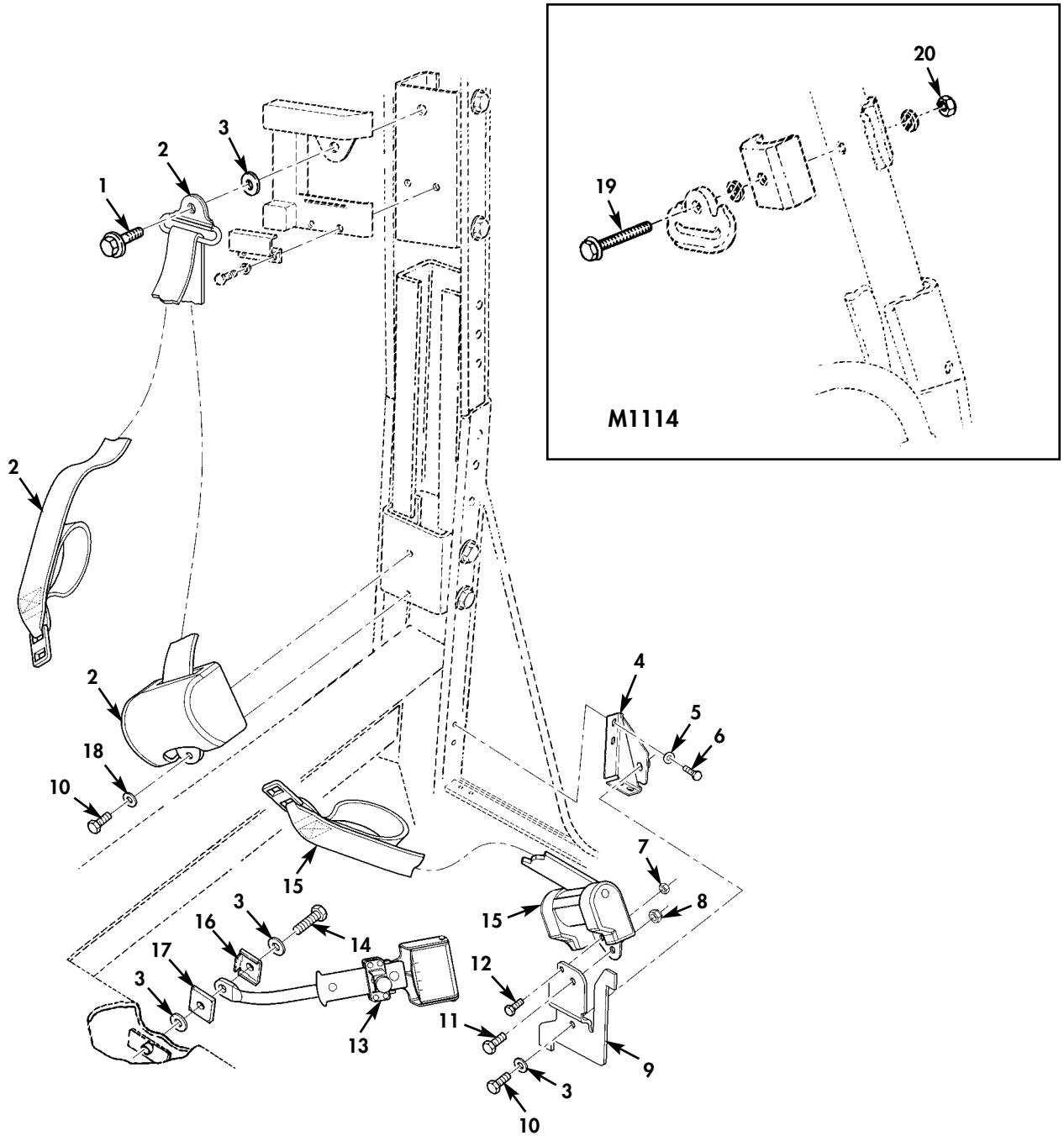

✱ QUANTITY SHOWN
REFLECTS ONE SIDE

Figure 220A. Front Seatbelts (Improved Restraint).

(1) ITEM NO	(2) SMR CODE	(3) NSN	(4) CAGEC	(5) PART NUMBER	(6) DESCRIPTION AND USABLE ON CODES(UOC)	(7) QTY
					GROUP 1806 UPSHOLSTERY SEATS AND CARPET	
					FIG. 220A FRONT SEATBELTS (IMPROVED RESTRAINT)	
* 1	PAOZZ	5310015424808	19207	12340259-15	SCREW,CAP,HEXAGON H PART OF KIT P/N 2005187-1..... UOC:TTA,TT1,UUA,UU2	2
* 2	PAOZZ	2540015419228	62323	2005174-1	BELT,VEHICULAR SAFE PART OF KIT P/N 2005160-3..... UOC:TTA,TT1,UUA,UU2,XBB	2
* 3	PAOZZ	5310012866077	19207	12341856	WASHER,FLAT .450 PART OF KIT P/N 2005187-1..... UOC:TTA,TT1,UUA,UU2,XBB	8
* 4	PFOZZ	5340015423351	99449	2005207-1	BRACKET,MOUNTING L.H.,FRONT PART OF KIT P/N 2005160-3..... UOC:TTA,TT1,UUA,UU2,XBB	1
* 4	PFOZZ	5340015424800	99449	2005207-2	BRACKET,MOUNTING R.H.,FRONT PART OF KIT P/N 2005160-3..... UOC:TTA,TT1,UUA,UU2,XBB	1
* 5	PAOZZ	5310008094058	96906	MS27183-10	WASHER,FLAT 1/4..... UOC:TTA,TT1,UUA,UU2,XBB	8
* 6	PAOZZ	5305000687837	80204	B1821BH025C063N	SCREW,CAP,HEXAGON H 1/4-20 X 5/8 PART OF KIT P/N 2005187-1.....	8
* 7	PAOZZ	5310015419570	19207	12480755	NUT,SELF-LOCKING PART OF KIT P/N 2005187-1..... UOC:TTA,TT1,UUA,UU2,XBB	2
* 8	PAOZZ	5310013153403	24617	9422300	NUT,SELF-LOCKING 7/16-20..... KIT P/N 2005187-1..... UOC:TTA,TT1,UUA,UU2,XBB	2
* 9	PFOZZ	5340015426993	99449	2005170-1	BRACKET,MOUNTING L.H.,FRONT PART OF KIT P/N 2005160-3..... UOC:TTA,TT1,UUA,UU2,XBB	1
* 9	PFOZZ	5340015426996	99449	2005170-3	BRACKET,MOUNTING R.H.,FRONT PART OF KIT P/N 2005160-3..... UOC:TTA,TT1,UUA,UU2,XBB	1
* 10	PAOZZ	5305007098517	80204	B1821BH044F100N	SCREW,CAP,HEXAGON H 7/16-20 X 1.00. UOC:TTA,TT1,UUA,UU2,XBB	2
* 11	PAOZZ	5305007098282	80204	B1821BH044F075N	SCREW,CAP,HEXAGON H 7/16-20 X 3/4 PART OF KIT P/N 2005187-1..... UOC:TTA,TT1,UUA,UU2,XBB	2
* 12	PAOZZ	5305015424936	19207	12480750	SCREW,CAP,HEXAGON H PART OF KIT P/N 2005187-1..... UOC:TTA,TT1,UUA,UU2,XBB	2
* 13	PAOZZ	5340015422001	99449	2005176-3	BUCKLE PART OF KIT P/N 2005160-3... UOC:TTA,TT1,UUA,UU2,XBB	2
* 14	PAOZZ	5305007098542	80204	B1821BH044F200N	SCREW,CAP,HEXAGON H 7/16-20 X 2.00, R.H.,FRONT PART OF KIT P/N 2002187-1 UOC:TTA,TT1,UUA,UU2,XBB	2

(1) ITEM NO	(2) SMR CODE	(3) NSN	(4) CAGEC	(5) PART NUMBER	(6) DESCRIPTION AND USABLE ON CODES(UOC)	(7) QTY
* 15	PAOZZ	2540015423809	99449	2005175-1	BELT,VEHICULAR,SAFE BLUE DOT L.H., FRONT PART OF KIT P/N 2005160-3..... UOC:TTA,TT1,UUA,UU2	1
* 15	PAOZZ	2540015419465	99449	2005175-3	BELT,VEHICULAR,SAFE RED DOT R.H., FRONT PART OF KIT P/N 2005160-3..... UOC:TTA,TT1,UUA,UU2	1
* 16	PAOZZ	5340015424794	99449	2005194-1	BRACKET,MOUNTING PART OF KIT P/N 2005160-3..... UOC:TTA,TT1,UUA,UU2	2
* 17	PAOZZ	5365015422010	99449	2005193-1	SPACER PLATE PART OF KIT P/N 2005160-3..... UOC:TTA,TT1,UUA,UU2	2
* 18	PAOZZ	5310012789555	34623	2436164	WASHER,FLAT 7/16 PART OF KIT P/N 2005187-1..... UOC:TTA,TT1,UUA,UU2	2
* 19	PAOZZ	5306013157088	19207	12340259-4	BOLT,SHOULDER 7/16-20 X 3.47..... UOC:XBB	2
* 20	PAOZZ	5310013153403	24617	9442938	NUT,SELF-LOCKING,HE 7/16-20..... UOC:XBB	2

END OF FIGURE

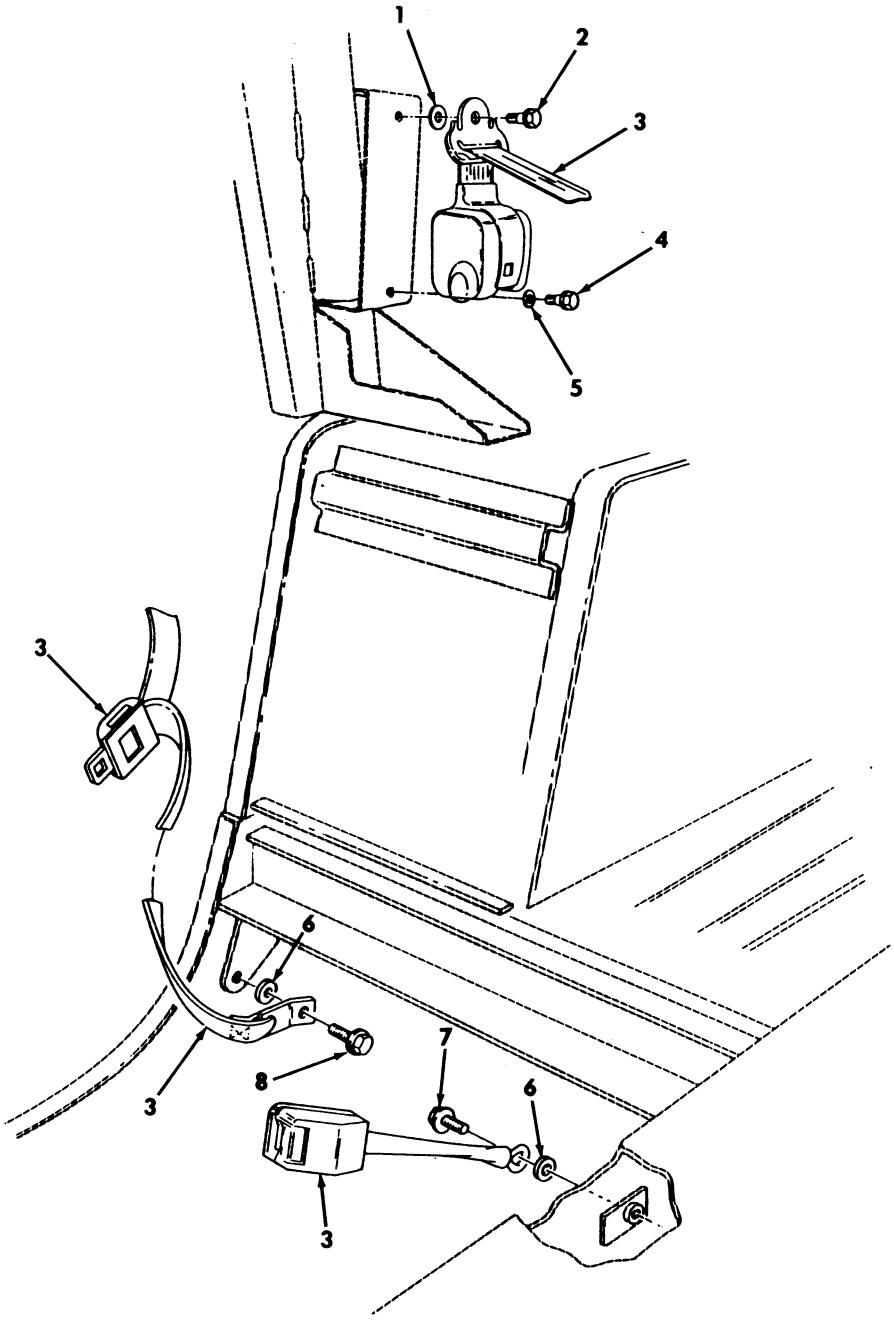

Figure 221. Rear Seatbelts, Brackets, and Mounting Hardware – M1114.

(1) ITEM NO	(2) SMR CODE	(3) NSN	(4) CAGEC	(5) PART NUMBER	(6) DESCRIPTION AND USABLE ON CODES(UOC)	(7) QTY
					GROUP 1806 UPHOLSTERY SEATS AND CARPET	
					FIG. 221 REAR SEATBELTS,BRACKETS, AND MOUNTING HARDWARE-M1114	
1	PAOZZ	5310012866077	19207	12341856	WASHER,FLAT 7/16-20 X 1.25..... UOC:XBB	2
2	PAOZZ	5306013162433	19207	12340259-7	BOLT,SHOULDER 7/16-20 X 1.00..... UOC:XBB	2
* 3	PAOZZ	2540014950817	1WVZ0	E35454	BELT,VEHICULAR SAFE REAR LEFT AND RIGHT.....	2
* 4	PAOZZ	5305013157066	24617	9425339	SCREW,CAP,HEXAGON H 7/16-20 X 1.00. UOC:XBB	2
5	PAOZZ	5310008094085	96906	MS27183-16	WASHER,FLAT 7/16..... UOC:XBB	2
6	PAOZZ	5310012538437	19207	12340058	WASHER,FLAT 7/16..... UOC:XBB	4
7	PAOZZ	5306013157086	19207	12340259-3	BOLT,SHOULDER 7/16-20 X 1.35..... UOC:XBB	2
8	PAOZZ	5306013161456	19207	12340259-6	BOLT,SHOULDER 7/16-20 X .90..... UOC:XBB	2

END OF FIGURE

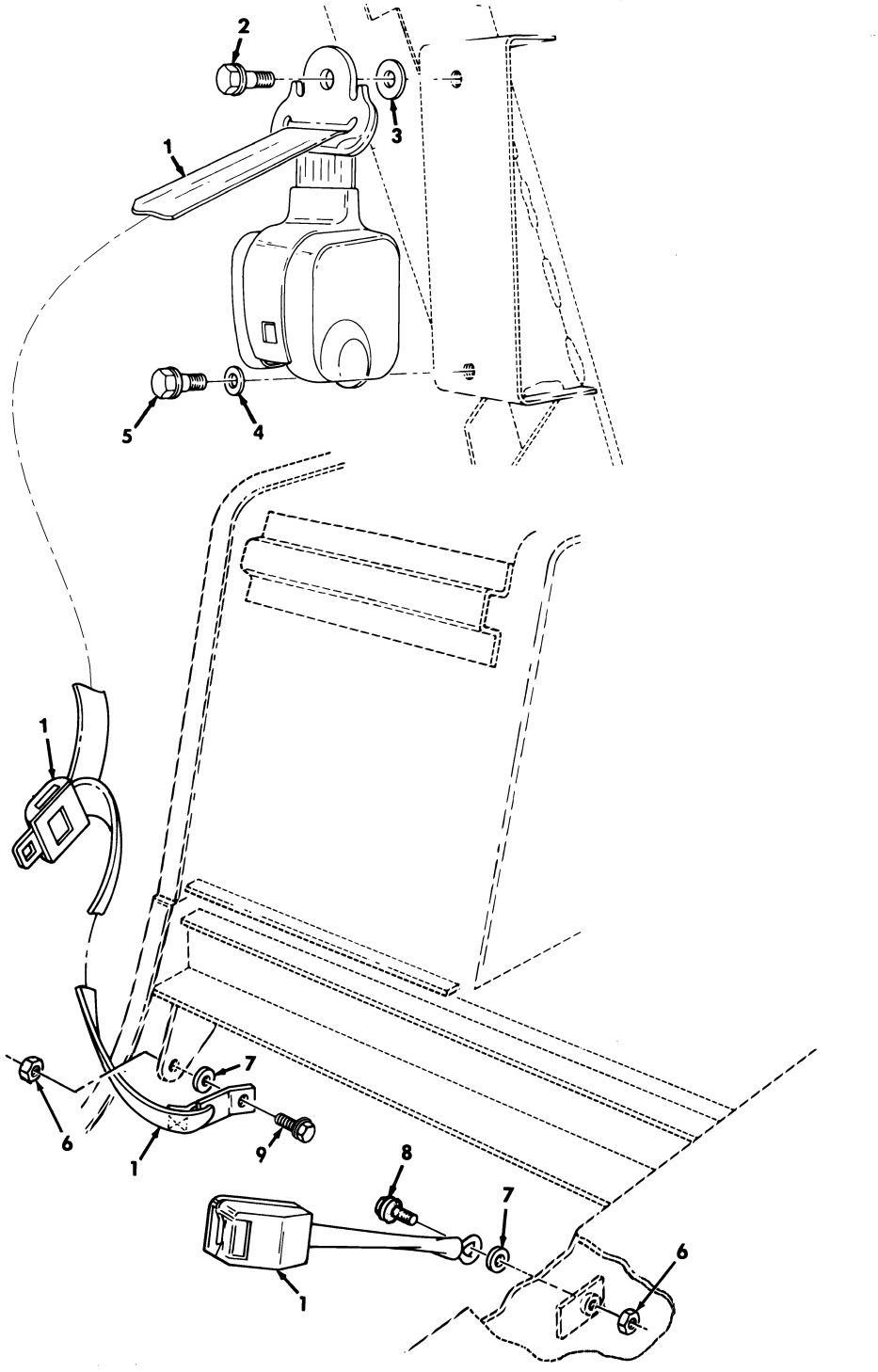

Figure 221A. Rear Seatbelts, Brackets, and Mounting Hardware – M1151.

(1) ITEM NO	(2) SMR CODE	(3) NSN	(4) CAGEC	(5) PART NUMBER	(6) DESCRIPTION AND USABLE ON CODES(UOC)	(7) QTY
					GROUP 1806 UPSHOLSTERY SEATS AND CARPET	
					FIG. 221A REAR SEAT BELTS,BRACKETS,AND MOUNTING HARDWARE-M1151	
* 1	PAOZZ	2540014950817	1WVZ0	E35454	BELT,VEHICULAR,SAFE REAR,L.H. AND R.H..... UOC:TTT	2
* 2	PAOZZ	5306013162433	19207	12340259-7	BOLT,SHOULDER 7/16-20 X 1.00..... UOC:TTT	2
* 3	PAOZZ	5310012866077	19207	12341856	WASHER,FLAT 7/16..... UOC:TTT	2
* 4	PAOZZ	5310002090965	80205	MS35338-47	WASHER,LOCK 7/16..... UOC:TTT	2
* 5	PAOZZ	5306011857052	7X677	9419293	BOLT,MACHINE 7/16-20 X 1.00..... UOC:TTT	2
* 6	PAOZZ	5310013153403	24617	9442938	NUT,SELF-LOCKING 7/16-20..... UOC:TTT	2
* 7	PAOZZ	5310012538437	19207	12340058	WASHER,FLAT 7/16..... UOC:TTT	4
* 8	PAOZZ	5306013157086	19207	12340259-3	BOLT,SHOULDER 7/16-20 X 1.00..... UOC:TTT	4
* 9	PAOZZ	5306013157088	19207	12340259-4	BOLT,SHOULDER 7/16-20 X 3.50..... UOC:TTT	2

END OF FIGURE

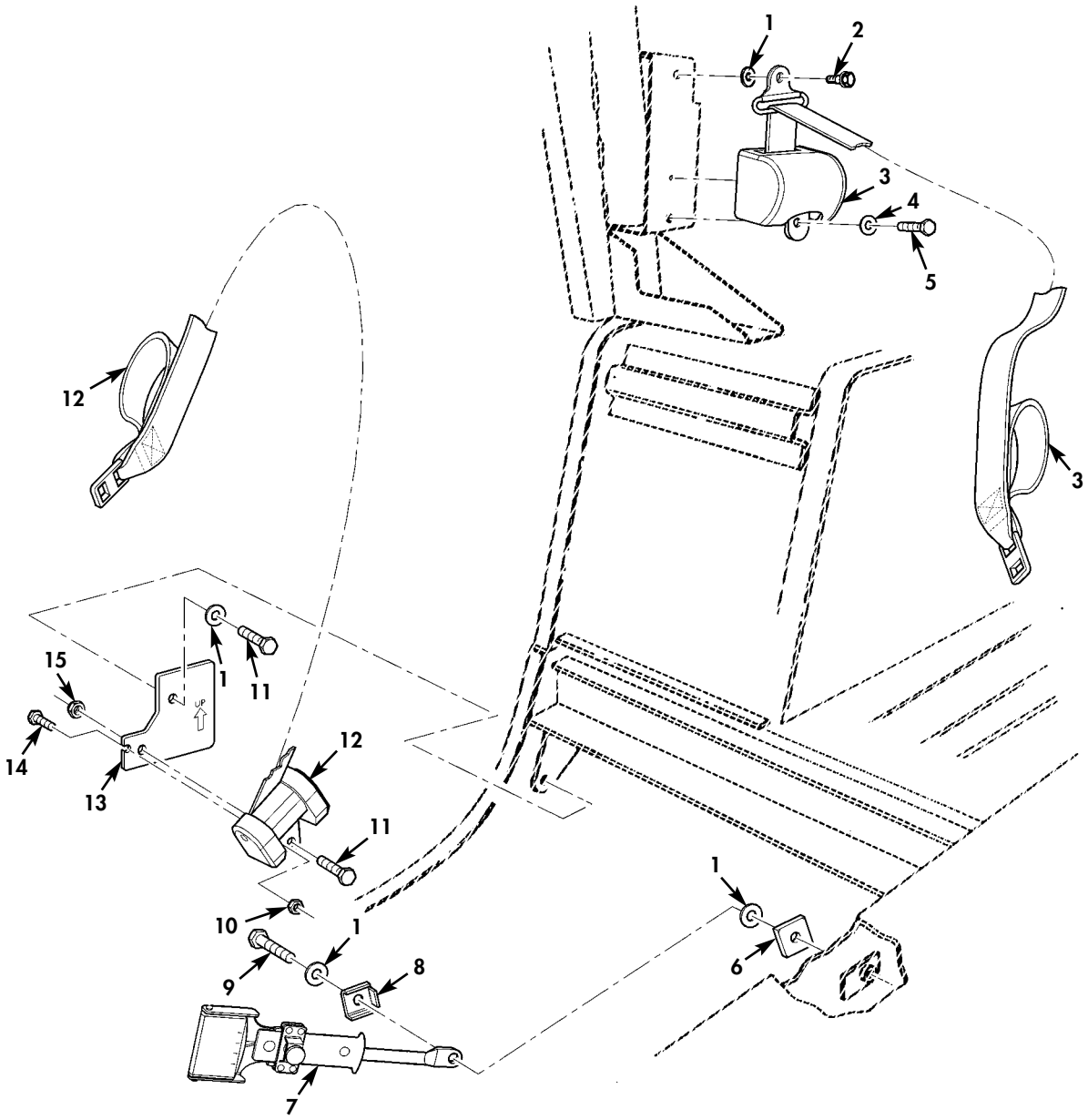

✱ QUANTITY SHOWN
REFLECTS ONE SIDE

Figure 221B. Rear Seatbelts (Improved Restraint M1114).

(1) ITEM NO	(2) SMR CODE	(3) NSN	(4) CAGEC	(5) PART NUMBER	(6) DESCRIPTION AND USABLE ON CODES(UOC)	(7) QTY
					GROUP 1806 UPSHOLSTERY SEATS AND CARPET	
					FIG. 221B REAR SEATBELTS (IMPROVED RESTRAINT M1114)	
* 1	PAOZZ	5310012866077	19207	12341856	WASHER,FLAT 7/16..... UOC:XBB	4
* 2	PAOZZ	5310015424808	19207	12340259-15	SCREW,CAP,HEXAGON H 7/16-20 X 1.38.. UOC:XBB	1
* 3	PAOZZ	2540015419228	99449	2005174-1	BELT,VEHICULAR SAFE L.H. OR R.H..... UOC:XBB	1
* 4	PAOZZ	5310012789555	34623	2436164	WASHER,FLAT 7/16..... UOC:XBB	1
* 5	PAOZZ	5306011857052	7X677	9419293	BOLT,MACHINE 7/16-20 X 1.00..... UOC:XBB	1
* 6	PAOZZ	5365015422010	62323	2005193-1	SPACER,PLATE L.H. OR R.H..... UOC:XBB	1
* 7	PAOZZ	5340015422001	99449	2005176-1	BUCKLE L.H. OR R.H..... UOC:XBB	1
* 8	PAOZZ	5340015424794	99449	2005194-1	BRACKET,MOUNTING..... UOC:XBB	1
* 9	PAOZZ	5305007098542	80204	B1821BH044F200N	SCREW,CAP,HEXAGON H 7/16-20 X 2.00.. UOC:XBB	1
* 10	PAOZZ	5310015419570	19207	12480755	NUT,SELF-LOCKING M7..... UOC:XBB	1
* 11	PAOZZ	5305007098282	80204	B1821BH044F075N	SCREW,CAP,HEXAGON H 7/16-20 X 3/4... UOC:XBB	1
* 12	PAOZZ	2540015423809	99449	2005175-1	BELT,VEHICULAR SAFE L.H.,REAR..... UOC:XBB	1
* 12	PAOZZ	2540015419465	99449	2005175-3	BELT,VEHICULAR,SAFE R.H.,REAR..... UOC:XBB	1
* 13	PFOZZ	5340015422540	99449	2005200-1	BRACKET,ANGLE L.H. OR R.H..... UOC:XBB	1
* 14	PAOZZ	5305015424936	19207	12480750	SCREW,CAP,HEXAGON H M7 X 1.0 X 16MM. UOC:XBB	1
* 15	PAOZZ	5310013153403	24617	9422300	NUT,SELF LOCKING 7/16-20..... UOC:XBB	1

END OF FIGURE

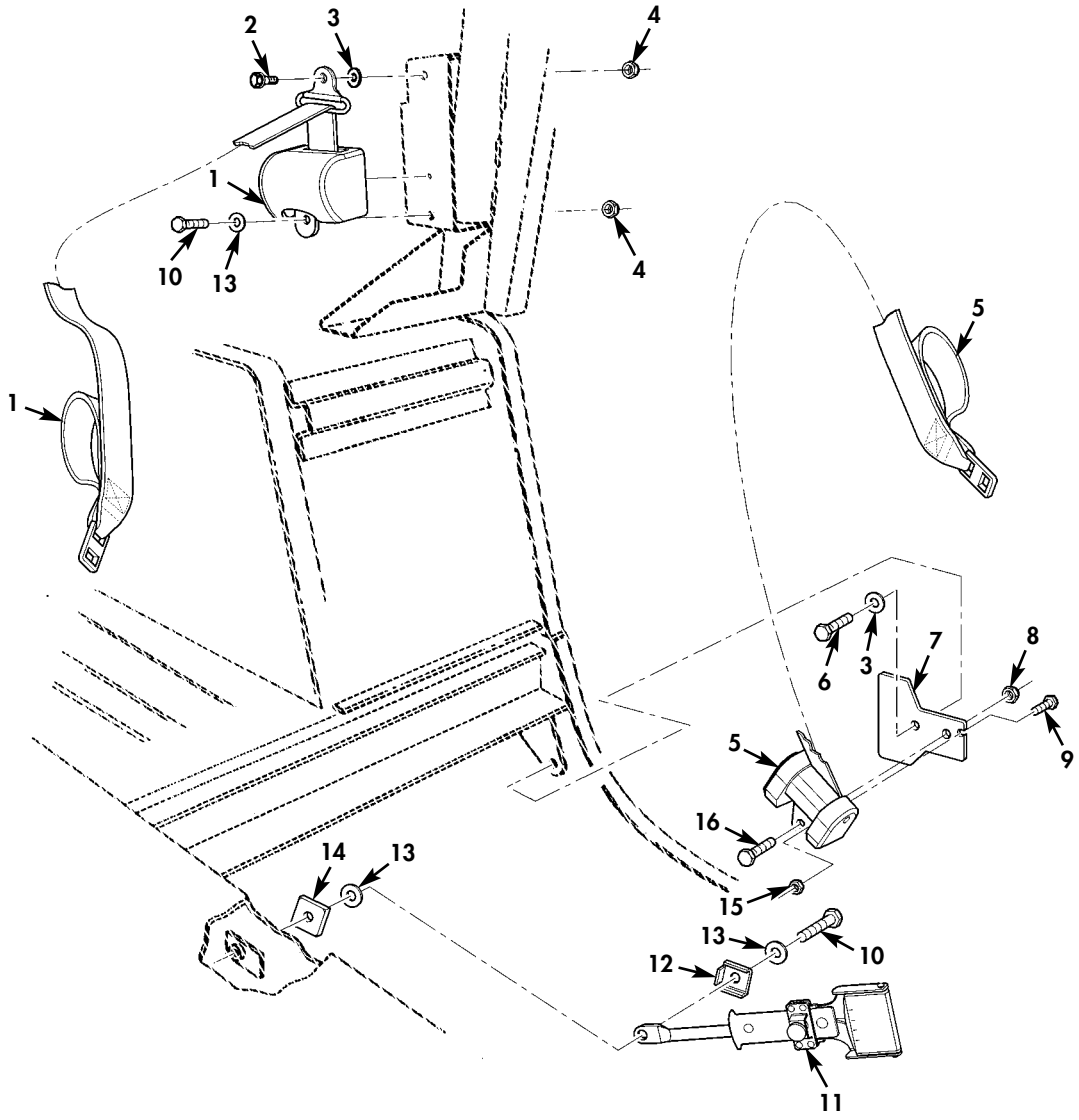

✱ QUANTITY SHOWN
REFLECTS ONE SIDE

Figure 221C. Rear Seatbelts (Improved Restraint).

(1) ITEM NO	(2) SMR CODE	(3) NSN	(4) CAGEC	(5) PART NUMBER	(6) DESCRIPTION AND USABLE ON CODES(UOC)	(7) QTY
					GROUP 1806 UPSHOLSTERY SEATS AND CARPET	
					FIG. 221C REAR SEATBELTS (IMPROVED RESTRAINT)	
* 1	PAOZZ	2540015419228	99449	2005174-1	BELT,VEHICULAR SAFE..... UOC:TTA,TTT,TT1,UU1,UU2	2
* 2	PAOZZ	5305007098515	80204	B1821BH044F138N	SCREW,CAP,HEXAGON H 7/16-20 X 1.375 UOC:TTA,TTT,TT1,UU1,UU2	2
* 3	PAOZZ	5310012866077	19207	12341856	WASHER,FLAT 7/16..... UOC:TTA,TTT,TT1,UU1,UU2	4
* 4	PAOZZ	5310009353607	96906	MS51988-10	NUT,SELF-LOCKING,HE 7/16-20..... UOC:TTA,TTT,TT1,UU1,UU2	2
* 5	PAOZZ	2540015423809	99449	2005175-1	BELT,VEHICULAR,SAFE L.H.,REAR..... UOC:TTA,TTT,TT1,UU1,UU2	1
* 5	PAOZZ	2540015419465	99449	2005175-3	BELT,VEHICULAR,SAFE R.H.,REAR..... UOC:TTA,TTT,TT1,UU1,UU2	1
* 6	PAOZZ	5305007098517	80204	B1821BH044F100N	SCREW,CAP,HEXAGON H 7/16-20 X 1.00. UOC:TTA,TTT,TT1,UU1,UU2	2
* 7	PAOZZ	5340015421716	99449	2005199-3	BRACKET,MOUNTING..... UOC:TTA,TTT,TT1,UU1,UU2	2
* 8	PAOZZ	5310013153403	24617	9422300	NUT,SELF-LOCKING 7/16-20..... UOC:TTA,TTT,TT1,UU1,UU2	2
* 9	PAOZZ	5305015424936	19207	12480750	SCREW,CAP,HEXAGON H..... UOC:TTA,TTT,TT1,UU1,UU2	2
* 10	PAOZZ	5305014079005	80204	B1821BH044F175N	SCREW,CAP,HEXAGON H 7/16-20 X 1.75 UOC:TTA,TTT,TT1,UU1,UU2	4
* 11	PAOZZ	5340015422001	99449	2005176-1	BUCKLE..... UOC:TTA,TTT,TT1,UU1,UU2	2
* 12	PAOZZ	5340015424794	99449	2005194-1	BRACKET,MOUNTING..... UOC:TTA,TTT,TT1,UU1,UU2	2
* 13	PAOZZ	5310012789555	34623	2436164	WASHER,FLAT 7/16..... UOC:TTA,TTT,TT1,UU1,UU2	2
* 14	PAOZZ	5365015422010	99449	2005193-1	SPACER PLATE..... UOC:TTA,TTT,TT1,UU1,UU2	2
* 15	PAOZZ	5310015419570	19207	12480755	NUT,SELF-LOCKING..... UOC:TTA,TTT,TT1,UU1,UU2	2
* 16	PAOZZ	5305007098282	24617	454970	SCREW,CAP,HEXAGON H..... UOC:TTA,TTT,TT1,UU1,UU2	2

END OF FIGURE

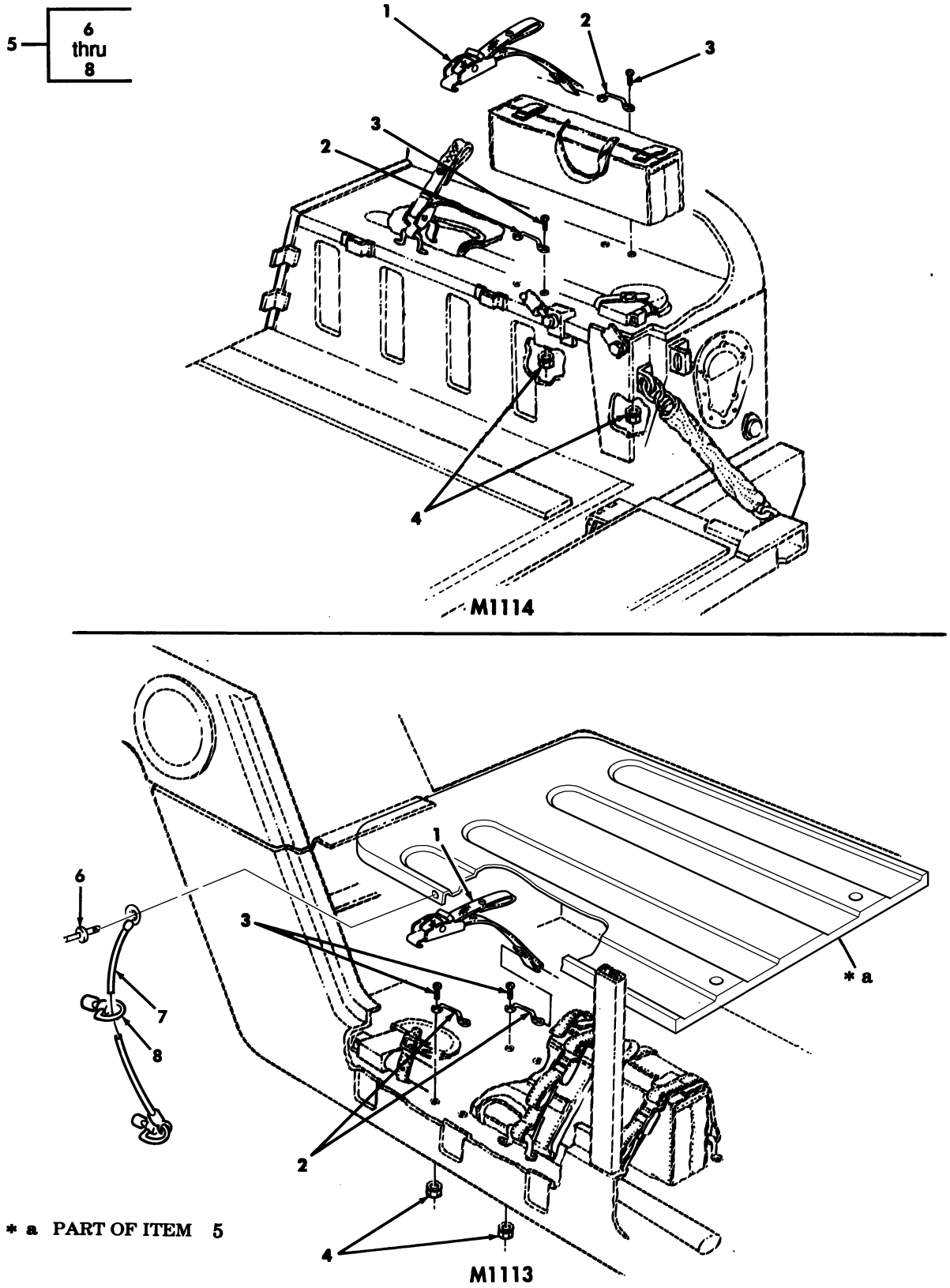

Figure 222. 3-1/2 Ton Jack Stowage Straps and Mounting Hardware.

(1) ITEM NO	(2) SMR CODE	(3) NSN	(4) CAGEC	(5) PART NUMBER	(6) DESCRIPTION AND USABLE ON CODES(UOC)	(7) QTY
					GROUP 1808 STOWAGE RACKS,BOXES, STRAPS,CARRYING CASES,CABLE REELS, HOSE REELS	
					FIG. 222 3-1/2 TON JACK STOWAGE STRAPS AND MOUNTING HARDWARE	
1	PAOZZ	5340012586158	31272	45410-16	STRAP,WEBBING..... UOC:XAA	3
1	PAOZZ	5340012547190	31272	45410-11	STRAP,WEBBING..... UOC:XBB	1
2	PAOZZ	5340014341809	19207	12338839-3	STRAP,RETAINING..... UOC:XAA	6
2	PAOZZ	5340014341809	19207	12338839-3	STRAP,RETAINING..... UOC:XBB	2
3	PAOZZ	5305011850114	7X677	157166	SCREW,MACHINE #10-32 X 3/4..... UOC:XAA	12
3	PAOZZ	5305011850114	7X677	157166	SCREW,MACHINE #10-32 X 3/4..... UOC:XBB	4
4	PAOZZ	5310001249265	72582	271169	NUT,PLAIN,ASSEMBLED #10-32..... UOC:XAA	12
4	PAOZZ	5310001249265	72582	271169	NUT,PLAIN,ASSEMBLED #10-32..... UOC:XBB	4
* 5	PFOZZ	2540011883229	34623	12340051	PANEL ASSEMBLY,REAR SEAT BACK..... UOC:XBB	2
* 6	PAOZZ	5320011384239	11815	CR3213-4-3	.RIVET,BLIND 1/8..... UOC:XBB	1
* 7	PAOZZ	2590012533905	19207	12339420-1	.CABLE AND STUD..... UOC:XBB	1
* 8	PAOZZ	5325012551126	72794	BJR7-90	.STUD,TURNLOCK..... UOC:XBB	1

END OF FIGURE

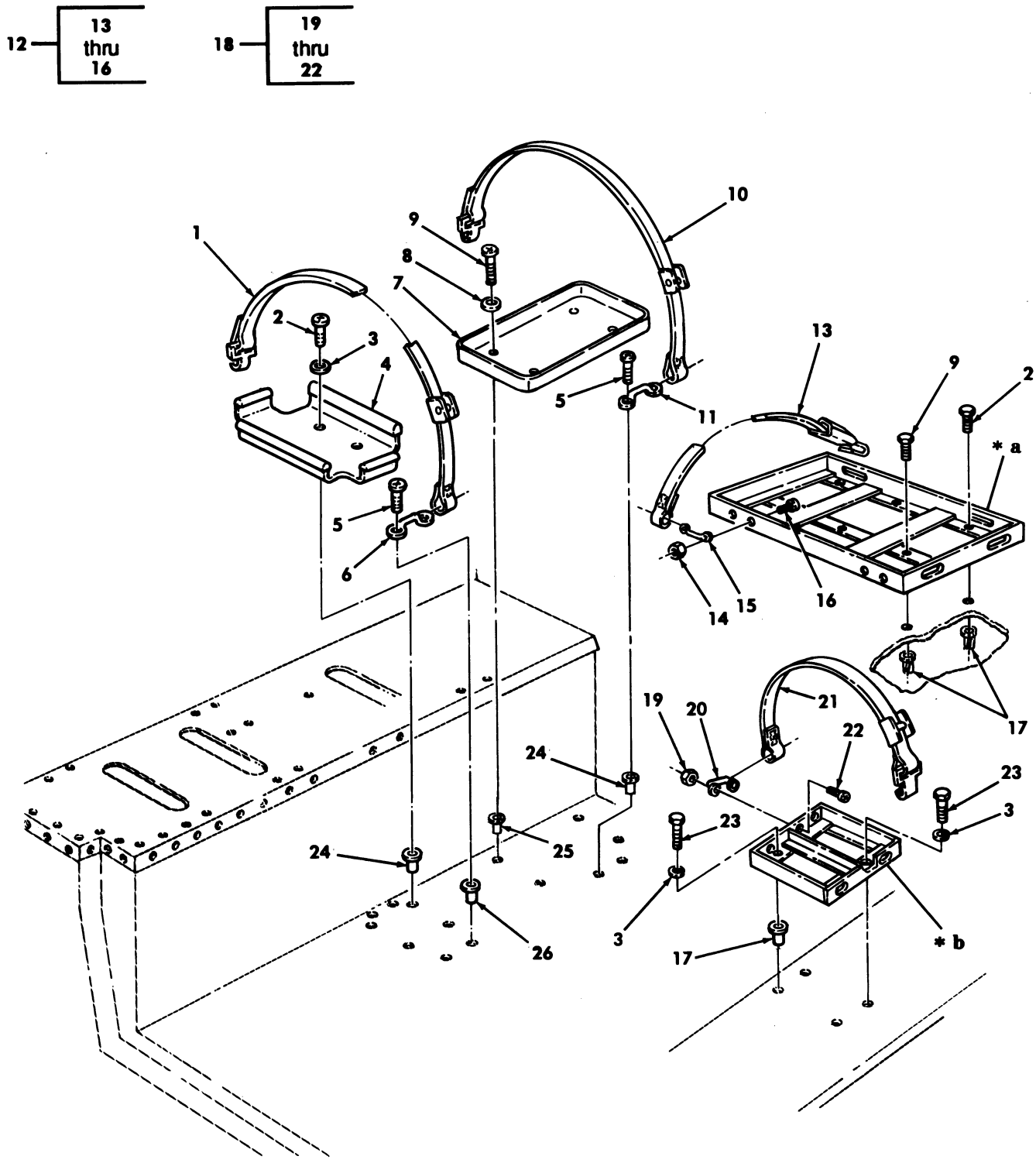

*** a PART OF ITEM 12**
*** b PART OF ITEM 18**

Figure 223. Ammunition and Water Can Stowage Trays and Mounting Hardware.

(1) ITEM NO	(2) SMR CODE	(3) NSN	(4) CAGEC	(5) PART NUMBER	(6) DESCRIPTION AND USABLE ON CODES(UOC)	(7) QTY
					GROUP 1808 STOWAGE RACKS,BOXES, STRAPS,CARRYING CASES,CABLE REELS, HOSE REELS	
					FIG. 223 AMMUNITION AND WATER CAN STOWAGE TRAYS AND MOUNTING HARDWARE	
1	PAOZZ	5340012590329	31272	45410-14	STRAP,WEBBING..... UOC:XBB	2
2	PAOZZ	5305000680509	80204	B1821BH025C125N	SCREW,CAP,HEXAGON H 1/4-20 X 1.25.. UOC:XBB	7
3	PAOZZ	5310011023270	24617	2436161	WASHER,FLAT 1/4..... UOC:XBB	19
4	PAOZZ	2590012477920	19207	12340158-2	TRAY ASSEMBLY,WATER..... UOC:XBB	1
5	PAOZZ	5305014652817	6W728	4397063-072	SCREW,MACHINE .190-32 X .500..... UOC:XBB	8
6	PAOZZ	5340014341809	19207	12338839-3	STRAP,RETAINING..... UOC:XBB	2
7	PAOZZ	2510011978572	19207	12340155	TRAY,FUEL CAN..... UOC:XBB	2
8	PAOZZ	5310011023270	24617	2436161	WASHER,FLAT 1/4..... UOC:XBB	8
* 9	PAOZZ	5305002253843	80204	B1821BH025C100N	SCREW,CAP HEXAGON H .250-20 X 1.00. UOC:XBB	11
10	PAOZZ	5340012590330	0VU83	45410-18	STRAP,WEBBING..... UOC:XBB	2
11	PAOZZ	5340014341809	19207	12338839-3	STRAP,RETAINING..... UOC:XBB	2
12	PAOOO	2590014112737	34623	12446772	BOX,AMMUNITION STOW..... UOC:XBB	1
13	PAOZZ	5340012590330	0VU83	45410-18	.STRAP,WEBBING..... UOC:XBB	4
* 14	PAOZZ	5310012514503	24617	9411893	.NUT,SELF-LOCKING,HE #10-32..... UOC:XBB	8
15	PAOZZ	5340013145957	19207	12338839-1	.LOOP,STRAP FASTENER..... UOC:XBB	4
16	PAOZZ	5305000187838	24617	187838	.SCREW,CAP,HEXAGON H #10-32 X .62.. UOC:XBB	8
17	PAOZZ	5325013942414	78276	ALS7-420-165	INSERT,SCREW THREAD 1/4-20..... UOC:XBB	14
18	PAOOO	2540012468292	19207	12340170	BOX,AMMUNITION STOW..... UOC:XBB	2
19	PAOZZ	5310002514503	24617	9411893	.NUT,LOCK #10-32..... UOC:XBB	8
20	PAOZZ	5340013145957	19207	12338839-1	.LOOP,STRAP FASTENER..... UOC:XBB	4
21	PAOZZ	5340012584529	19207	12340507-4	.STRAP,WEBBING..... UOC:XBB	4
22	PAOZZ	5305000187838	24617	187838	.SCREW,CAP,HEXAGON H #10-32 X 3/8.. UOC:XBB	8
23	PAOZZ	5305000680502	96906	MS90725-6	SCREW,CAP,HEXAGON H 1/4-20 X 3/4... UOC:XBB	8

(1) ITEM NO	(2) SMR CODE	(3) NSN	(4) CAGEC	(5) PART NUMBER	(6) DESCRIPTION AND USABLE ON CODES(UOC)	(7) QTY
24	PAOZZ	5310014691183	6W728	4397050-022	NUT,PLAIN,BLIND RIV 1/4-20..... UOC:XBB	8
25	PAOZZ	4931012028692	19207	12339998-13	PLUSNUT #10-32..... UOC:XBB	8
26	PAOZZ	5310011976253	25472	S10P320	NUT,PLAIN,BLIND RIV #10-32..... UOC:XBB	2

END OF FIGURE

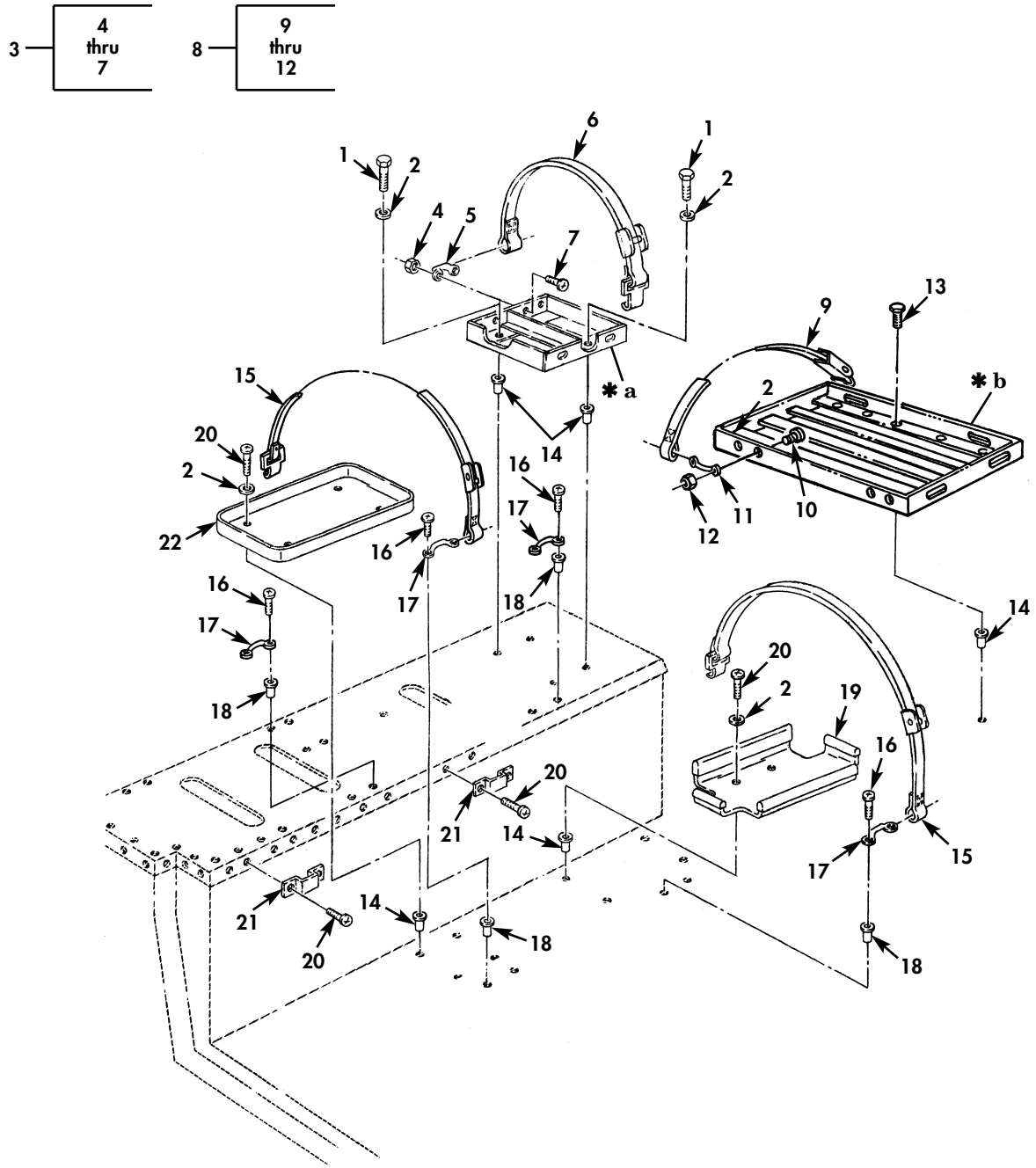

✱ **a** PART OF ITEM 3
✱ **b** PART OF ITEM 8

Figure 223A. Ammo and Water Can Stowage Trays and Mounting Hardware (Sheet 1 of 2).

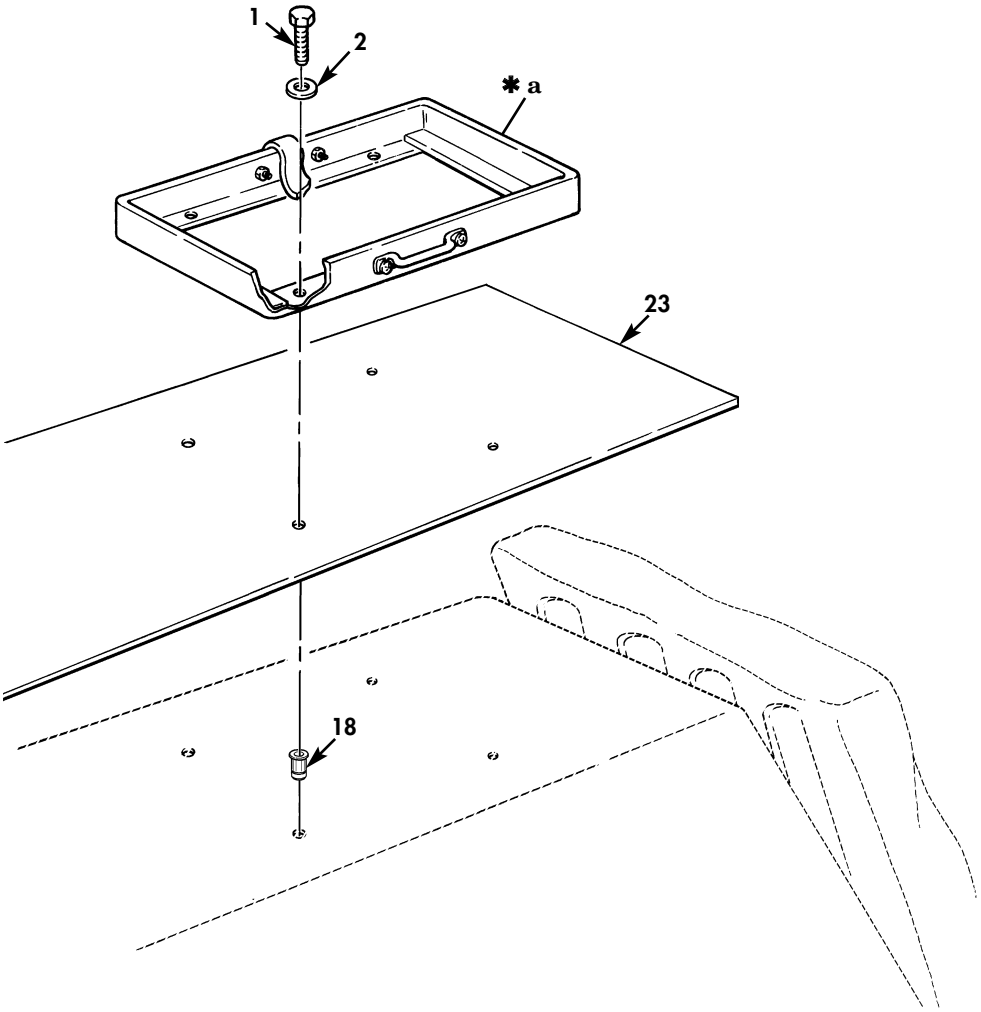

✱ **a** PART OF ITEM 3

Figure 223A. Ammo and Water Can Stowage Trays and Mounting Hardware (Sheet 2 of 2).

(1) ITEM NO	(2) SMR CODE	(3) NSN	(4) CAGEC	(5) PART NUMBER	(6) DESCRIPTION AND USABLE ON CODES(UOC)	(7) QTY
					GROUP 1808 STOWAGE RACK,BOXES, STRAPS,CARRYING CASES,CABLE REELS, HOSE REELS	
					FIG. 223A AMMUNITION AND WATER CAN STOWAGE TRAYS AND MOUNTING HARDWARE	
* 1	PAOZZ	5305002253843	80204	B1821BH025C100N	SCREW,CAP,HEXAGON H 1/4-20 X 1.00.. UOC:TTT	8
* 2	PAOZZ	5310011023270	24617	2436161	WASHER,FLAT 1/4..... UOC:TTT	23
* 3	PAOZZ	2540012468292	19207	12340170	BOX,AMMUNITION STOW..... UOC:TTT	2
* 4	PAOZZ	5310002514503	24617	9411893	.NUT,SELF-LOCKING #10-32..... UOC:TTT	8
* 5	PAOZZ	5340013145957	19207	12338839-1	.LOOP,STRAP FASTENER..... UOC:TTT	4
* 6	PAOZZ	5340012584529	98313	FDC8070-1-4	.STRAP,WEBBING..... UOC:TTT	4
* 7	PAOZZ	5305000187838	24617	187838	.SCREW,CAP,HEXAGON H #10-32 X 5/8.. UOC:TTT	8
* 8	PAOZZ	2540014112737	19207	12446772	BOX,AMMUNITION STOWAGE..... UOC:TTT	1
* 9	PAOZZ	5340012590330	OVU83	45410-18	.STRAP,WEBBING..... UOC:TTT	4
* 10	PAOZZ	5305000187838	24617	187838	.SCREW,CAP,HEXAGON H #10-32 X 5/8.. UOC:TTT	8
* 11	PAOZZ	5340013145957	19207	12338839-1	.LOOP,STRAP FASTENER..... UOC:TTT	4
* 12	PAOZZ	5310002514503	24617	9411893	.NUT,LOCK #10-32..... UOC:TTT	8
* 13	PAOZZ	5305000712506	80204	B1821BH025C050N	SCREW,CAP,HEXAGON H 1/4-20 X 1/2... UOC:TTT	6
* 14	PAOZZ	5325014759697	78276	ALS4-1024-225	INSERT,SCREW,THREADED..... UOC:TTT	6
* 15	PAOZZ	5340012564655	31272	45606-12	STRAP,WEBBING..... UOC:TTT	4
* 16	PAOZZ	5305006773067	57712	156971	SCREW,MACHINE #10-32 X 3/4..... UOC:TTT	14
* 17	PAOZZ	5340013145957	19207	12338839-1	LOOP,STRAP FASTENER..... UOC:TTT	4
* 18	PAOZZ	5310011981723	19207	12339998-14	NUT,PLAIN,BLIND RIVET #10-32..... UOC:TTT	14
* 19	PAOZZ	2590012477920	19207	12340158-2	TRAY,ASSEMBLY,WATER C..... UOC:TTT	1
* 20	PAOZZ	5305004826825	96906	MS35206-345	SCREW,MACHINE 1/4-20 X 1.313..... UOC:TTT	3
* 21	PAOZZ	5340012535479	19207	12340130	STRAP,RETAINING..... UOC:TTT	3
* 22	PAOZZ	2510011978572	19207	12340155	TRAY,FUEL CAN..... UOC:TTT	2

(1) ITEM NO	(2) SMR CODE	(3) NSN	(4) CAGEC	(5) PART NUMBER	(6) DESCRIPTION AND USABLE ON CODES(UOC)	(7) QTY
* 23	PAOZZ		34623	6015568	PLATE ASSEMBLY,WHEELHOUSE..... UOC:TTT	2

END OF FIGURE

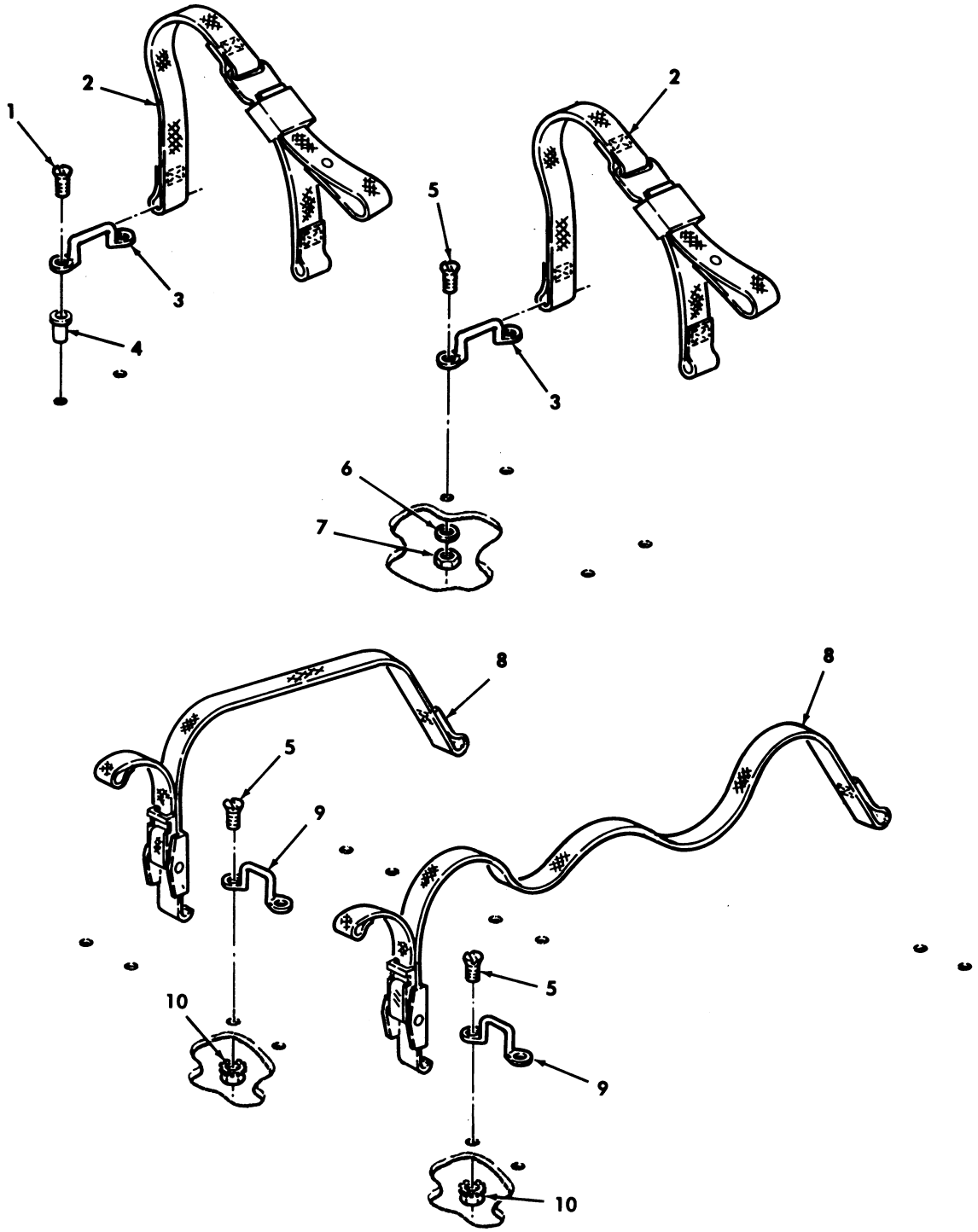

Figure 224. Max Tool Set Straps, Flare, Warning Triangle, First Aid Kit, and Mounting Hardware.

(1) ITEM NO	(2) SMR CODE	(3) NSN	(4) CAGEC	(5) PART NUMBER	(6) DESCRIPTION AND USABLE ON CODES(UOC)	(7) QTY
					GROUP 1808 STOWAGE RACKS,BOXES, STRAPS,CARRING CASES,CABLE REELS, HOSE REELS	
					FIG. 224 MAX TOOL SET STRAPS,FLARE, WARNING TRIANGLE,FIRST AID KIT,AND MOUNTING HARDWARE	
1	PAOZZ	5305014652817	6W728	4397063-072	SCREW,MACHINE .190-32 X .50..... UOC:XAA	4
2	PAOZZ	5340011982255	31272	44647-12	STRAP,WEBBING..... UOC:XAA	2
3	PAOZZ	5340013145957	19207	12338839-1	LOOP,STRAP FASTENER..... UOC:XAA	4
4	PAOZZ	5325014203005	78276	ALS7-1032-130	INSERT,SCREW THREAD .190-32..... UOC:XAA	4
5	PAOZZ	5305011850114	7X677	157166	SCREW #10-32 X 3/4..... UOC:XAA	16
6	PAOZZ	5310012349416	96906	MS51412-2	WASHER,FLAT 7/32..... UOC:XAA	4
* 7	PAOZZ	5310002514503	24617	9411893	NUT,SELF-LOCKING,HE #10-32..... UOC:XAA	4
8	PAOZZ	5340012586158	31272	45410-16	STRAP,WEBBING..... UOC:XAA	3
9	PAOZZ	5340014341809	19207	12338839-3	LOOP,STRAP,FASTENER..... UOC:XAA	6
10	PAOZZ	5310001249265	72582	271169	NUT,PLAIN,ASSEMBLED #10-32..... UOC:XAA	12

END OF FIGURE

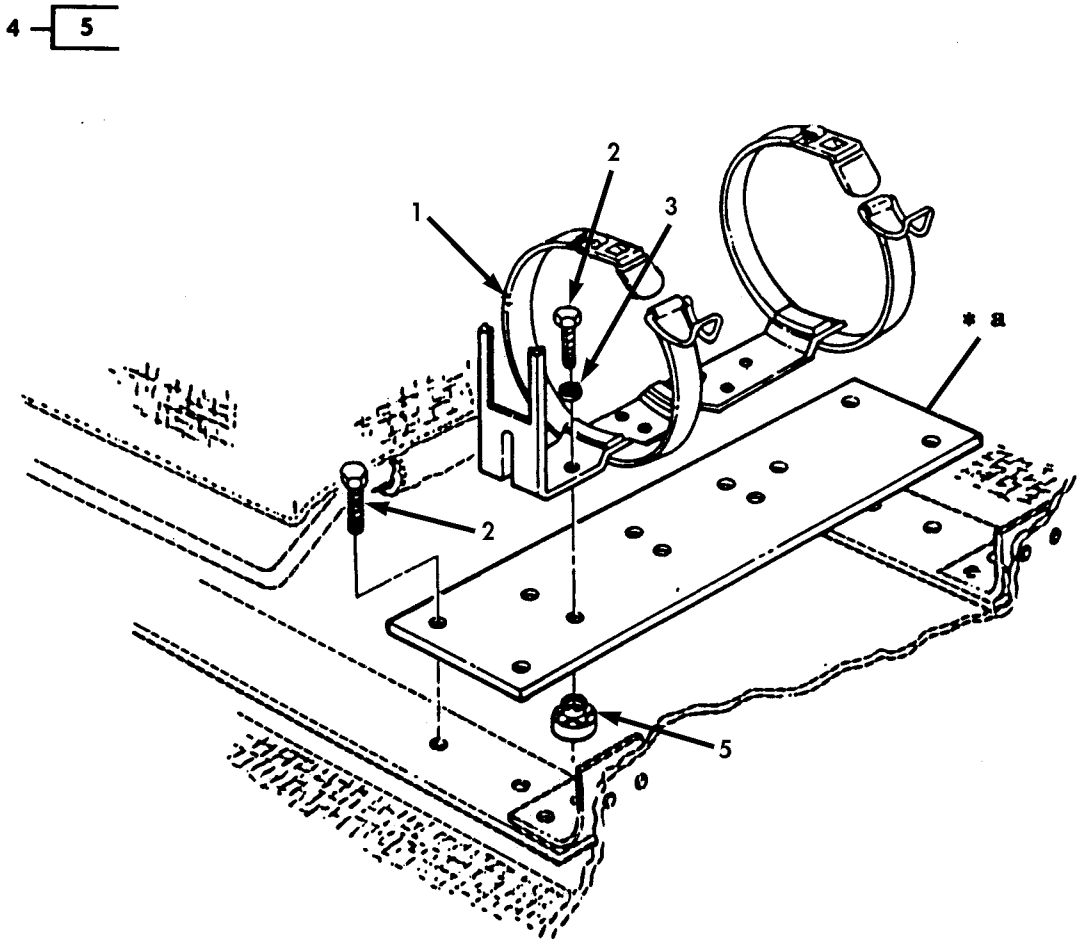

* a PART OF ITEM 4

Figure 225. Fire Extinguisher Mounting Brackets.

(1) ITEM NO	(2) SMR CODE	(3) NSN	(4) CAGEC	(5) PART NUMBER	(6) DESCRIPTION AND USABLE ON CODES(UOC)	(7) QTY
					GROUP 1808 STOWAGE RACKS,BOXES, STRAPS,CARRYING CASES,CABLE REELS, HOSE REELS	
					FIG. 225 FIRE EXTINGUISHER MOUNTING BRACKETS	
1	PAOZZ	4210012595634	19207	12340842	BRACKET,FIRE EXTING.....	1
2	PAOZZ	5305000680508	80204	B1821BH025C075N	SCREW,CAP,HEXAGON H.....	8
3	PAOZZ	5310008094058	96906	MS27183-10	WASHER,FLAT .276.....	4
4	PAOZZ	5340014734800	19207	12446706	PLATE,MOUNTING.....	1
5	PAOZZ	5310014727476	19207	12339294-2	.NUT,SELF-LOCKING,CL.....	4

END OF FIGURE

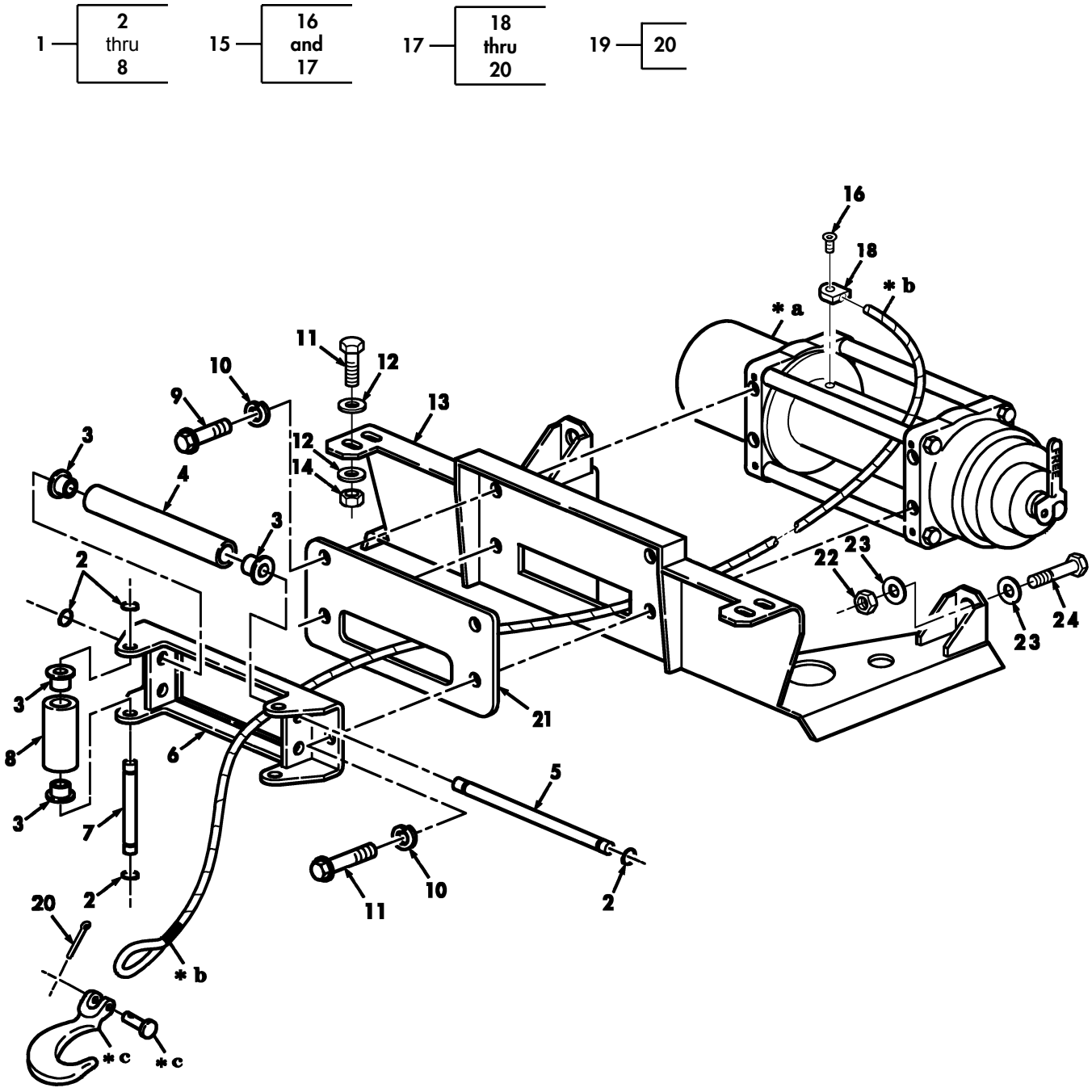

* **a** PART OF ITEM 15
* **b** PART OF ITEM 17
* **c** PART OF ITEM 19

Figure 225A. Rear Hydraulic Winch Assembly, Mounting Bracket, and Roller Assembly (M1114).

(1) ITEM NO	(2) SMR CODE	(3) NSN	(4) CAGEC	(5) PART NUMBER	(6) DESCRIPTION AND USABLE ON CODES(UOC)	(7) QTY
					GROUP 20 WINCH GROUP 2001 WINCH ASSEMBLY FIG. 225A REAR HYDRAULIC WINCH ASSEMBLY,MOUNTING BRACKET,AND ROLLER ASSEMBLY (M1114)	
1	PAOZZ	2950014855455	19207	983-WB-8	ROLLER ASSEMBLY,WINCH..... UOC:XBB	1
2	PAOZZ		0GZB7	983-0070	.RING,SNAP..... UOC:XBB	6
3	PAOZZ		0GZB7	983-WH8-4	.BUSHING,SLEEVE..... UOC:XBB	8
4	PAOZZ		0GZB7	983-WH8-5	.ROLLER..... UOC:XBB	2
5	PAOZZ		0GZB7	983-WH8-2	.SHAFT..... UOC:XBB	2
6	PAOZZ		0GZB7	983-WH8-1	.FRAME..... UOC:XBB	1
7	PAOZZ		0GZB7	983-WH8-3	.SHAFT..... UOC:XBB	2
8	PAOZZ		0GZB7	983-WH8-6	.ROLLER..... UOC:XBB	2
9	PAOZZ	5305000680510	80204	B1821BH038C100N	SCREW,CAP HEXAGON H..3/8-16 X 1.00.. UOC:XBB	2
10	PAOZZ	5310006349541	96906	MS35338-46	WASHER.LOCK 3/8..... UOC:XBB	4
11	PAOZZ	5305000680511	80204	B1821BH038C125N	SCREW,CAP HEXAGON H 3/8-16 X 1.25.. UOC:XBB	6
12	PAOZZ	5310014124013	24617	2436163	WASHER,FLAT 3/8..... UOC:XBB	8
13	PAOZZ	5340014855962	19207	12469385	BRACKET,WINCH MOUNT ..... UOC:XBB	1
* 14	PAOZZ	5310011269404	7X677	9422297	NUT,SELF-LOCKING..... UOC:XBB	4
15	PAOFF	2950014853843	0GZB7	994-W002	WINCH,HYDRAULIC..... UOC:XBB	1
16	PAOZZ	4010014963987	0GZB7	983-90-50115	.SCREW,CAP,SOCKET HE..... UOC:XBB	2
17	PAOZZ	4010014963987	0GZB7	983-19-50025	.WIRE ROPE ASSEMBLY..... UOC:XBB	1
18	PAOZZ	4030014962315	0GZB7	983-19-50711	.TERMINAL,ROPE,SWAGING..... UOC:XBB	1
19	PAOZZ		0GZB7	983-19-51202	.HOOK ASSEMBLY..... UOC:XBB	1
20	PAOZZ	5315000120123	80205	MS24665-355	..PIN,COTTER..... UOC:XBB	1
21	PAOZZ	5340014866138	19207	12469455	PLATE,REINFORCEMENT..... UOC:XBB	1
22	PAOZZ	5310004093333	96906	MS51943-45	NUT,SELF-LOCKING,HE..... UOC:XBB	2
23	PAOZZ	5310011474052	34623	G2436168	WASHER,FLAT..... UOC:XBB	4
24	PAOZZ	5305009474363	80204	B1821BH075C550N	SCREW,CAP,HEXAGON H..3/4-10 X 5.50.. UOC:XBB	2

END OF FIGURE

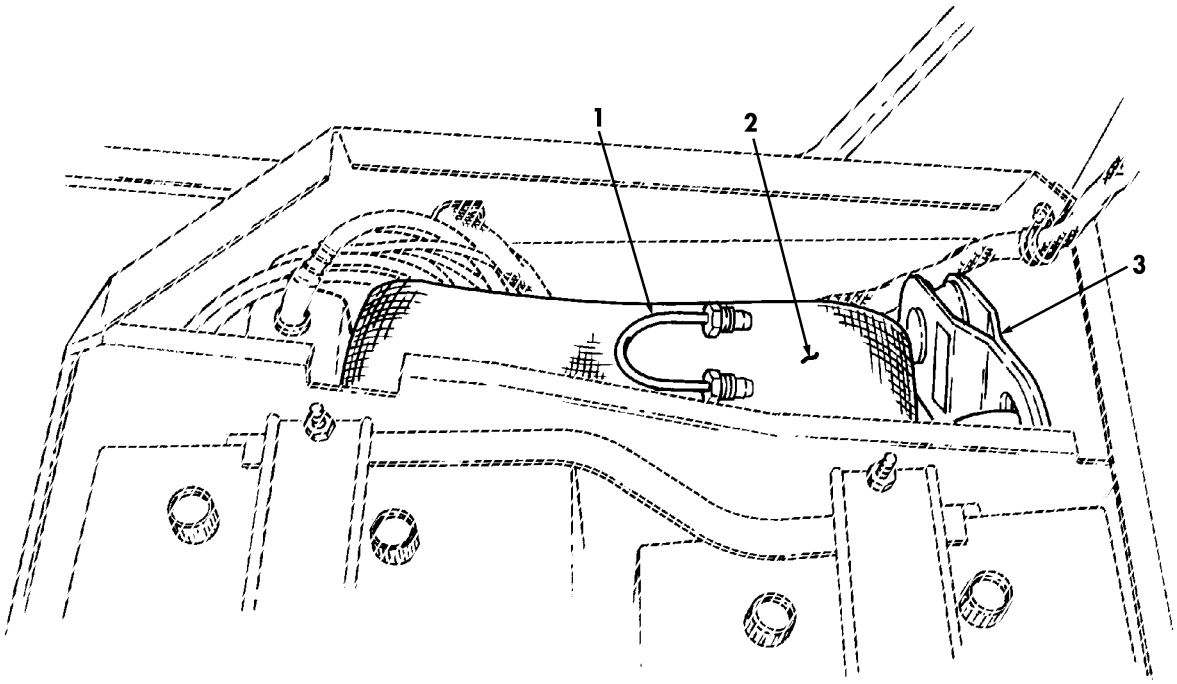

Figure 225B. Rear Hydraulic Winch Strap, Snatch Block, and Bypass Tube (M1114).

(1) ITEM NO	(2) SMR CODE	(3) NSN	(4) CAGEC	(5) PART NUMBER	(6) DESCRIPTION AND USABLE ON CODES(UOC)	(7) QTY
					GROUP 2001 HYDRAULIC WINCH	
					FIG. 225B REAR HYDRAULIC WINCH STRAP, SNATCH BLOCK,AND BYPASS TUBE ASSEMBLY (M1114)	
* 1	PAOZZ	4710014753753	0GZB7	983-90-50201	TUBE ASSEMBLY,METAL PART OF KIT P/N 57K3562..... UOC:XBB	1
* 2	PAOZZ	5340014753650	0GZB7	983-60-50089	STRAP..... UOC:XBB	1
* 3	PAOZZ	3940014754983	0GZB7	983-60-50085A	BLOCK,TACKEL PART OF KIT P/N 57K3562 UOC:XBB	1

END OF FIGURE

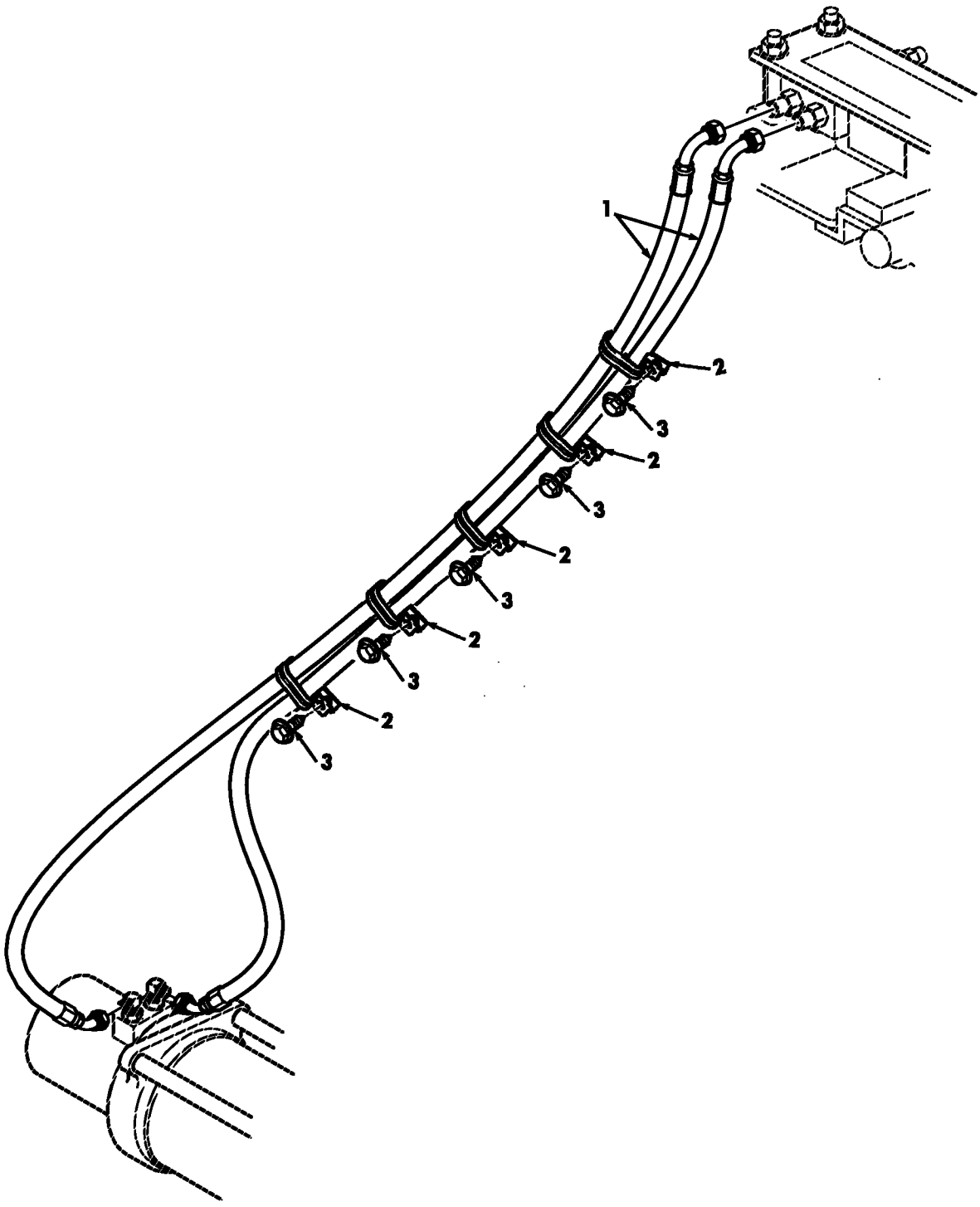

Figure 225C. Rear Hydraulic Winch Hoses and Mounting Hardware (M1114).

(1) ITEM NO	(2) SMR CODE	(3) NSN	(4) CAGEC	(5) PART NUMBER	(6) DESCRIPTION AND USABLE ON CODES(UOC)	(7) QTY
					GROUP 2001 WINCH ASSEMBLY	
					FIG. 225C REAR HYDRAULIC WINCH HOSES AND MOUNTING HARDWARE (M1114)	
* 1	PAOZZ	4720014850416	01276	FB6004-01	HOSE ASSEMBLY,NONME..... UOC:XBB	2
* 2	PAOZZ	5340007319611	96906	MS21334-34	CLAMP,LOOP..... UOC:XBB	5
* 3	PAOZZ	5305010065736	01206	DR-T10X3/4	SCREW,TAPPING..... UOC:XBB	5
					END OF FIGURE	

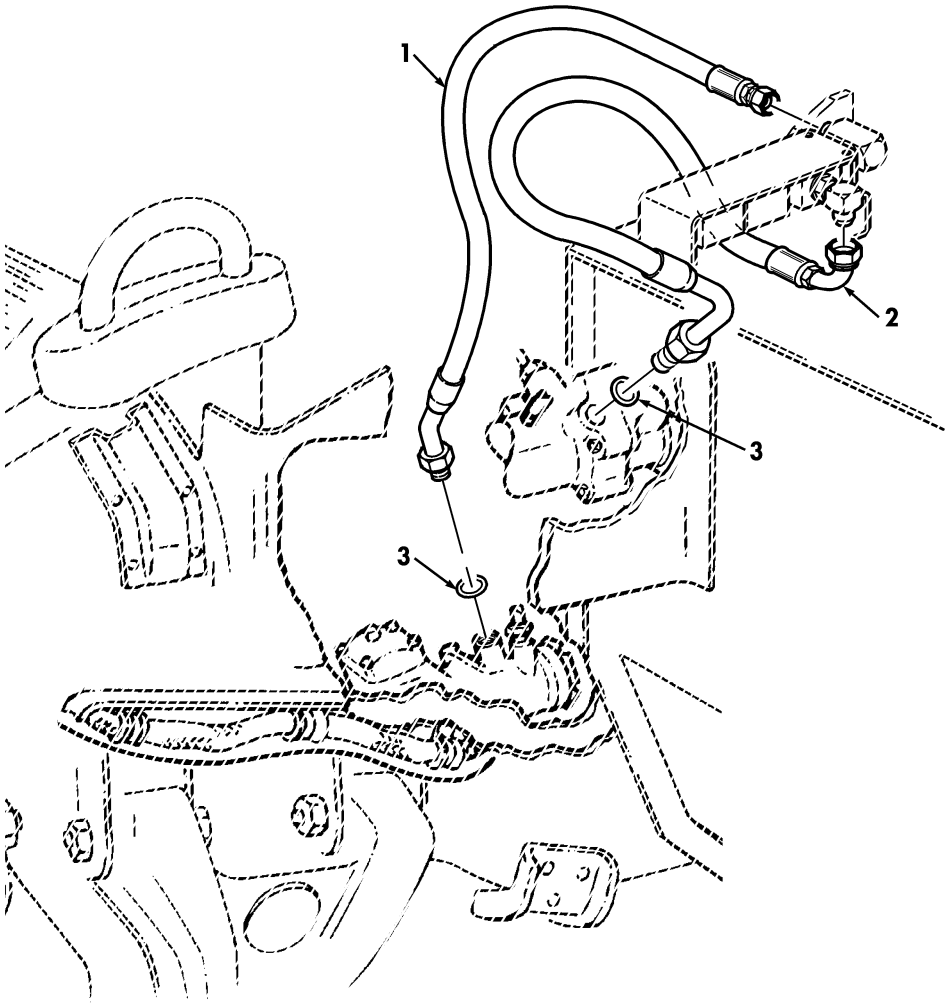

Figure 225D. Rear Hydraulic Winch Hose Assemblies, Hydro-Boost, and Power Steering (M1114).

(1) ITEM NO	(2) SMR CODE	(3) NSN	(4) CAGEC	(5) PART NUMBER	(6) DESCRIPTION AND USABLE ON CODES(UOC)	(7) QTY
					GROUP 2001 WINCH ASSEMBLY	
					FIG. 225D REAR HYDRAULIC WINCH HOSE ASSEMBLIES,HYDRO-BOOST,AND POWER STEERING (M1114)	
* 1	PAOZZ	4720014850104	01276	FK3727GGJ0324AA	HOSE ASSEMBLY,NONME..... UOC:XBB	1
* 2	PAOZZ	4720014849983	01276	FZ178GG0204225AA	HOSE ASSEMBLY,NONME..... UOC:XBB	1
* 3	PAOZZ	5331005806586	41387	2938-2	O-RING..... UOC:XBB	2

END OF FIGURE

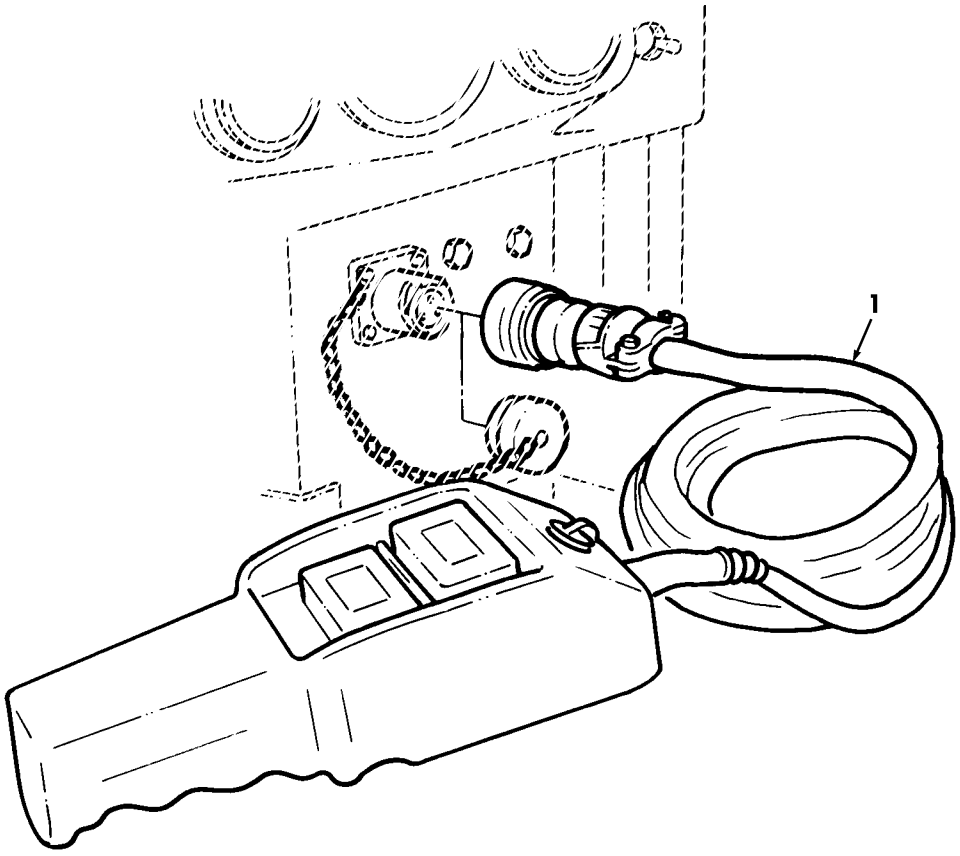

Figure 225E. Rear Hydraulic Winch Controller Assembly (M1114).

(1) ITEM NO	(2) SMR CODE	(3) NSN	(4) CAGEC	(5) PART NUMBER	(6) DESCRIPTION AND USABLE ON CODES(UOC)	(7) QTY
					GROUP 2001 WINCH ASSEMBLY	
					FIG. 225E REAR HYDRAULIC WINCH CONTROLLER SWITCH ASSEMBLY (M1114)	
* 1	PAOZZ	6150014854379	0GZB7	994-74-1001	CABLE ASSEMBLY,SPECIAL..... UOC:XBB	1

END OF FIGURE

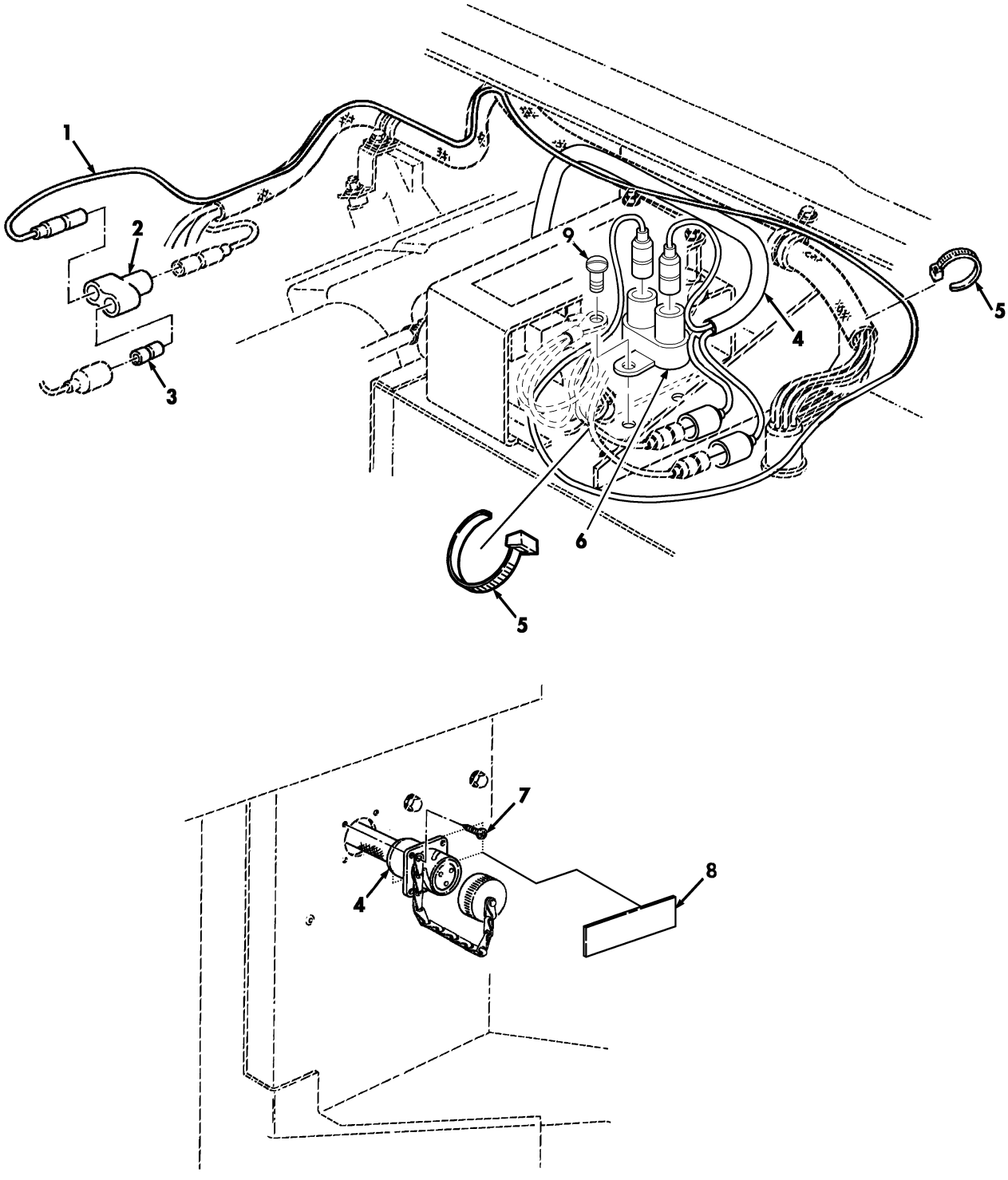

Figure 225F. Rear Hydraulic Winch Controller Plug Harness, Lead Assembly, and Related Parts (M1114).

(1) ITEM NO	(2) SMR CODE	(3) NSN	(4) CAGEC	(5) PART NUMBER	(6) DESCRIPTION AND USABLE ON CODES(UOC)	(7) QTY
					GROUP 2001 WINCH ASSEMBLY	
					FIG. 225F REAR HYDRAULIC WINCH CONTROLLER PLUG HARNESS,LEAD ASSEMBLY,AND RELATED PARTS (M1114)	
* 1	PAOZZ	6150014731169	19207	12469065-1	LEAD,ELECTRICAL..... UOC:XBB	1
* 2	PAOZZ	5935009006281	96906	MS24147-1	ADAPTER,CONNECTOR..... UOC:XBB	1
* 3	PAOZZ	5935008074109	19207	8741492	ADAPTER,CONNECTOR..... UOC:XBB	1
* 4	PAOZZ	6150014863605	34623	12469064-2	PLUG,CONTROLLER..... UOC:XBB	1
* 5	PAOZZ	5975009846582	96906	MS3367-1-0	STRAP,TIEDOWN..... UOC:XBB	2
* 6	PAOZZ	5925014302318	58536	AA55571/01/001	CIRCUIT BREAKER..... UOC:XBB	1
* 7	PAOZZ	5305014783387	24617	449617	SCREW,TAPPING..... UOC:XBB	4
* 8	PAOZZ	7690014745928	19207	12469066	MARKER,IDENTIFICATION..... UOC:XBB	1
* 9	PAOZZ	5305014782387	24617	449617	SCREW,TAPPING..... UOC:XBB	2

END OF FIGURE

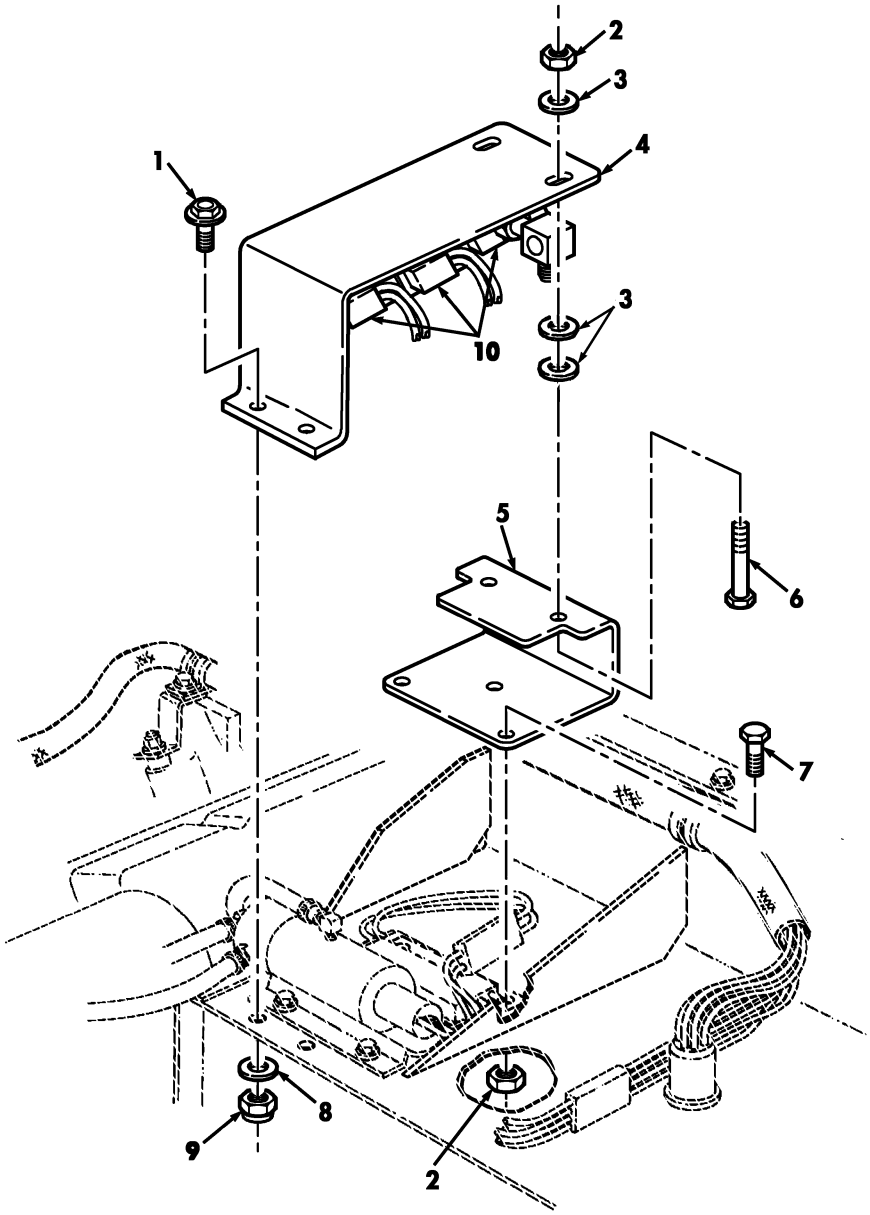

Figure 225G. Rear Hydraulic Winch Control Valve Assembly and Mounting Parts (M1114).

(1) ITEM NO	(2) SMR CODE	(3) NSN	(4) CAGEC	(5) PART NUMBER	(6) DESCRIPTION AND USABLE ON CODES(UOC)	(7) QTY
					GROUP 2001 WINCH ASSEMBLY	
					FIG. 225G REAR HYDRAULIC WINCH CONTROL VALVE ASSEMBLY AND MOUNTING PARTS (M1114)	
* 1	PAOZZ		24617	9425182	SCREW 10-24 X 1.00..... UOC:XBB	2
* 2	PAOZZ	5310015200598	24617	271172	NUT,SELF-LOCKING..... UOC:XBB	5
* 3	PAOZZ	5310011023270	24617	2436161	WASHER,FLAT 1/4..... UOC:XBB	6
* 4	PAOZZ	5340014857254	19207	12469386	SHIELD..... UOC:XBB	1
* 5	PAOZZ	5340014855977	19207	12469387	SUPPORT..... UOC:XBB	1
* 6	PAOZZ		24617	454841	BOLT,HEXAGON H 1/4-20 X 2.00..... UOC:XBB	2
* 7	PAOZZ		24617	427587	BOLT,HEXAGON H 1/4-20 X 1.25..... UOC:XBB	3
* 8	PAOZZ	5310014357784	6W728	4397005-010	WASHER,FLAT .281 X .625 X .065..... UOC:XBB	2
* 9	PAOZZ	5310014398173	6W728	4397064-001	NUT,SELF-LOCKING 1/4-20..... UOC:XBB	2
* 10	PAOZZ	4810014858109	0GZB7	994-95000470-C	BODY,VALVE..... UOC:XBB	1

END OF FIGURE

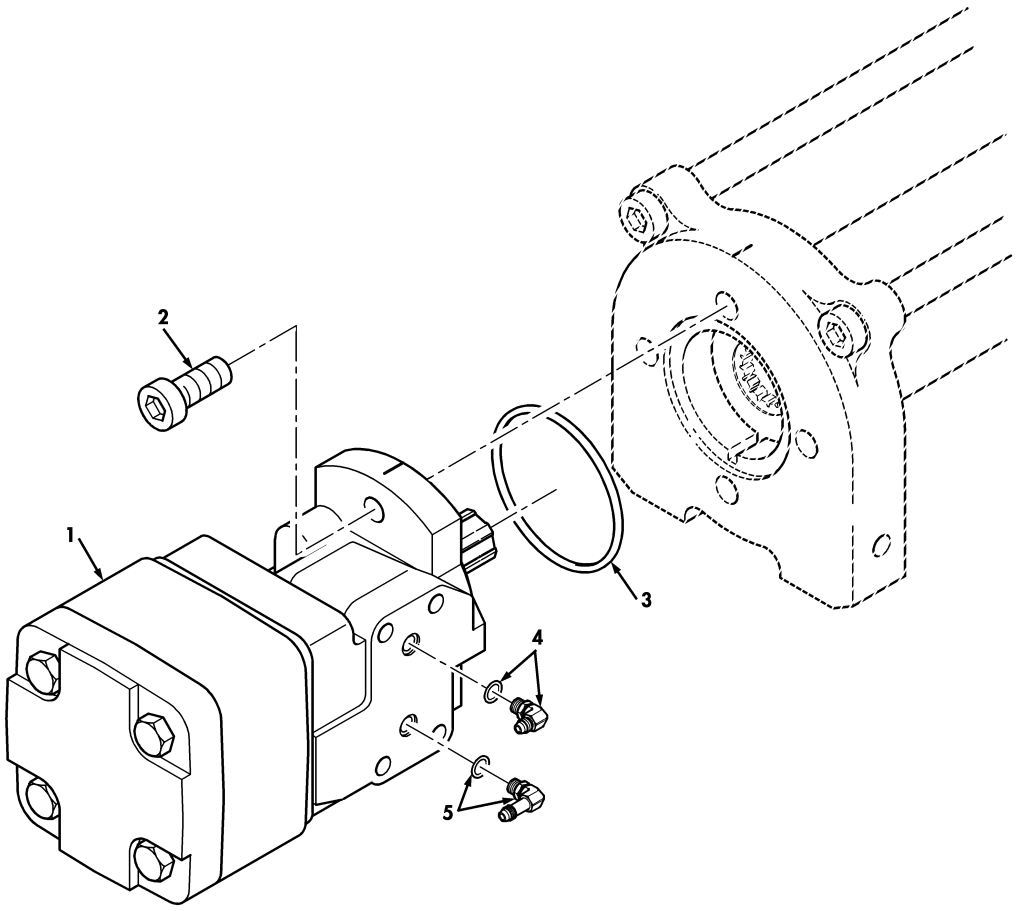

Figure 225H. Rear Hydraulic Winch Motor (M1114).

(1) ITEM NO	(2) SMR CODE	(3) NSN	(4) CAGEC	(5) PART NUMBER	(6) DESCRIPTION AND USABLE ON CODES(UOC)	(7) QTY
					GROUP 2001 WINCH ASSEMBLY	
					FIG. 225H REAR HYDRAULIC WINCH MOTOR (M1114)	
* 1	PAFZZ	2540014960001	0GZB7	994-97-50071	MOTOR,HYDRAULIC..... UOC:XBB	1
* 2	PAFZZ	5305018799934	96906	MS16997-142	SCREW,CAP SOCKET HE..... UOC:XBB	2
* 3	PAFZZ	5331005796861	02697	2-236N304-75	O-RING..... UOC:XBB	1
* 4	PAFZZ	4320014956948	0GZB7	994-90-50080 SS	CONNECTOR,FLUID,PUM..... UOC:XBB	1
* 5	PAFZZ	4320014956971	0GZB7	994-90-50080 SL	CONNECTOR,FLUID,PUM..... UOC:XBB	1
					END OF FIGURE	

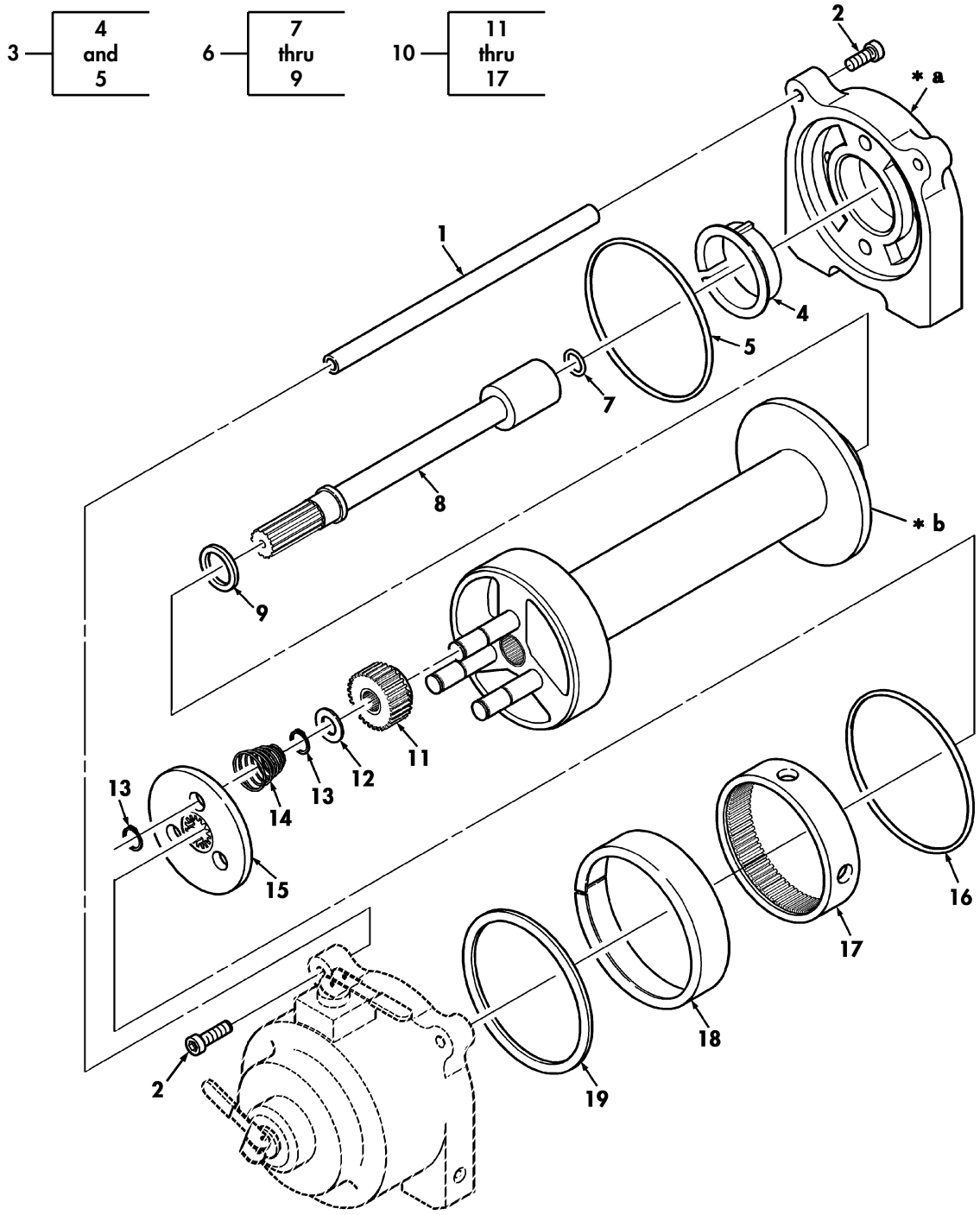

✱ **a** PART OF ITEM 3
✱ **b** PART OF ITEM 10

Figure 225I. Hydraulic Winch Drum Assembly.

(1) ITEM NO	(2) SMR CODE	(3) NSN	(4) CAGEC	(5) PART NUMBER	(6) DESCRIPTION AND USABLE ON CODES(UOC)	(7) QTY
					GROUP 2001 WINCH ASSEMBLY	
					FIG. 225I HYDRAULIC WINCH DRUM ASSEMBLY	
* 1	PAOZZ	3040014951286	0GZB7	983-WH11-088	CONNECTING LINK,RIG.....	2
* 2	PAOZZ	5305009836622	96906	MS1699781	SCREW,CAP HEXAGON H.....	4
* 3	PAFZZ	3830015068307	0GZB7	983-WH11-008	HOLDER,CABLE REEL.....	1
* 4	PAFZZ	3120014955549	0GZB7	983-WH11-010	.BEARING,SLEEVE.....	1
* 5	PAFZZ	5331005610273	02697	2-161N674-70	.O-RING.....	2
* 6	PAFZZ	3040014951788	0GZB7	983-WH11-401	SHAFT ASSEMBLY.....	1
* 7	PAFZZ	5331010133723	0GZB7	983-95-37044D0	.O-RING.....	1
* 8	PAFZZ		0GZB7	983-WH11-200	.SHAFT.....	1
* 9	PAFZZ	5310014958552	0GZB7	983-WH11-049	.WASHER,FLAT.....	1
* 10	PAFZZ	2590014960116	0GZB7	983-WH11-404	REEL,CABLE.....	1
* 11	PAFZZ	3020015052366	0GZB7	983-WH11-034	.GEAR.....	3
* 12	PAFZZ	3120014955563	0GZB7	983-WH11-048	.BEARING,WASHER THRU.....	3
* 13	PAFZZ	5325014953930	0GZB7	983-WH11-023	.RING,RETAINING.....	6
* 14	PAFZZ	5360014953842	0GZB7	983-WH11-096	.SPRING,HELICAL COMP.....	3
* 15	PAFZZ	3020015055317	0GZB7	983-WH11-103	.GEAR,INTERNAL.....	1
* 16	PAFZZ	5331005610273	02697	2-161N674-70	.O-RING.....	1
* 17	PAFZZ	3020015059172	0GZB7	983-WH11-028	.RING,GEAR.....	1
* 18	PAFZZ	5360014955710	0GZB7	983-WH11-025	SPRING,HELICAL COMP.....	1
* 19	PAFZZ	3120014955557	0GZB7	983-WH11-029	BEARING,WASHER THRU.....	1

END OF FIGURE

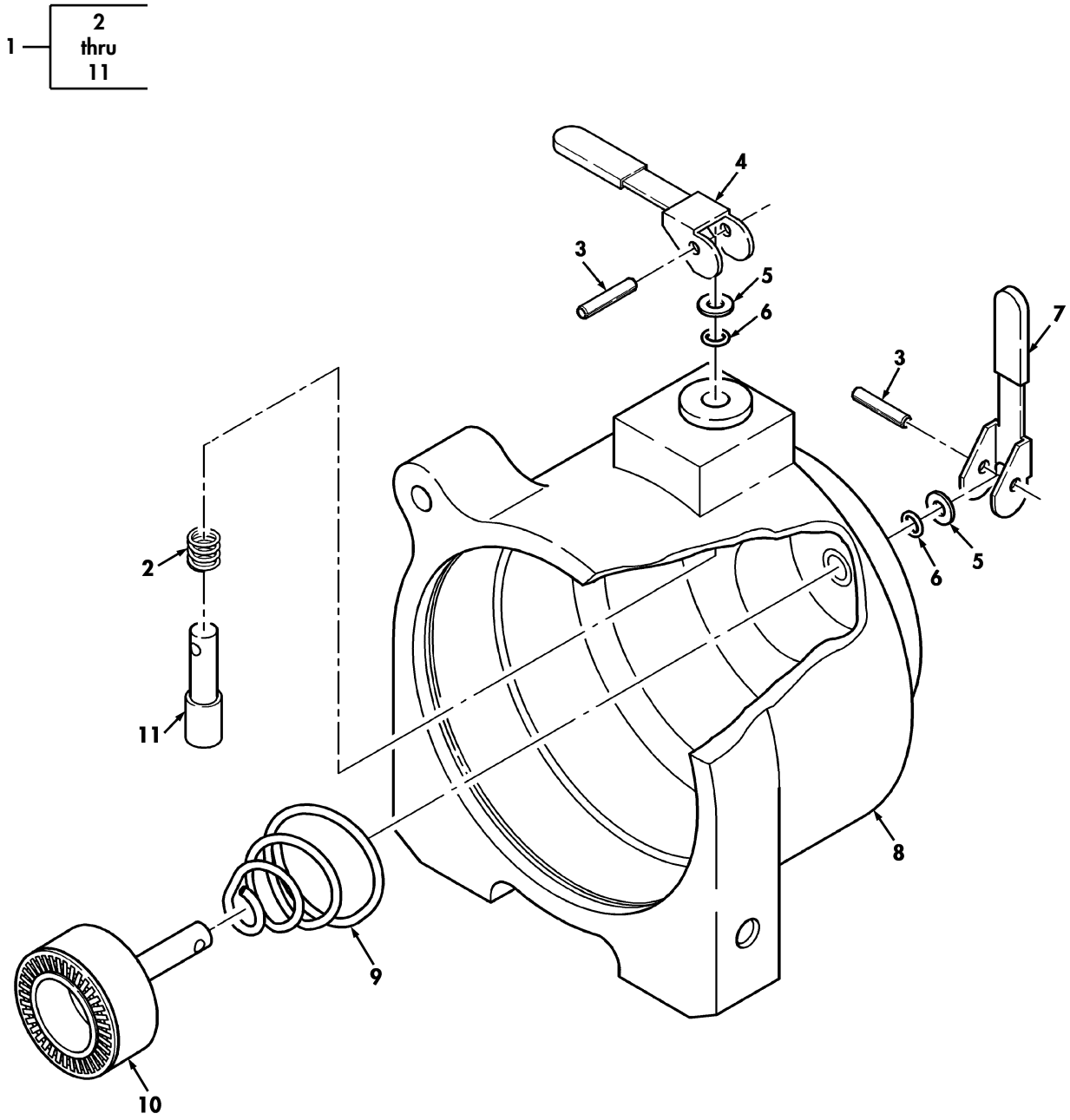

Figure 225J. Rear Hydraulic Winch Gearbox.

(1) ITEM NO	(2) SMR CODE	(3) NSN	(4) CAGEC	(5) PART NUMBER	(6) DESCRIPTION AND USABLE ON CODES(UOC)	(7) QTY
					GROUP 2001 WINCH ASSEMBLY	
					FIG. 225J REAR HYDRAULIC WINCH GEARBOX	
* 1	PAFZZ	3040014951374	0GZB7	983-WH11-402	HOUSING,MECHANICAL.....	1
* 2	PAFZZ	5360014953945	0GZB7	983-WH11-043	.SPRING,HELICAL COMP.....	1
* 3	PAFZZ	5315014958461	0GZB7	983-WH11-001	.PIN,STRAIGHT HEADLE.....	2
* 4	PAFZZ	5340014960756	0GZB7	983-WH11-003	.LEVER,MANUAL CONTRO LOW RANGE.....	1
* 5	PAFZZ	5310014958559	0GZB7	983-WH11-046	.WASHER,FLAT.....	2
* 6	PAFZZ	5331005840265	24785	SP3107	.O-RING.....	2
* 7	PAFZZ	5340014960752	0GZB7	983-WH11-002	.LEVER,MANUAL CONTRO HIGH RANGE....	1
* 8	XAFZZ		0GZB7	983-WH11-026	.HOUSING.....	1
* 9	PAFZZ	5306014953951	0GZB7	983-WH11-097	.SPRING,HELICAL COMP.....	1
* 10	PAFZZ	5340014988836	0GZB7	983-WH11-403	.PLUNGER ASSEMBLY.....	1
* 11	PAFZZ	5340014954867	0GZB7	983-WH11-042	.PLUNGER,DETENT.....	1

END OF FIGURE

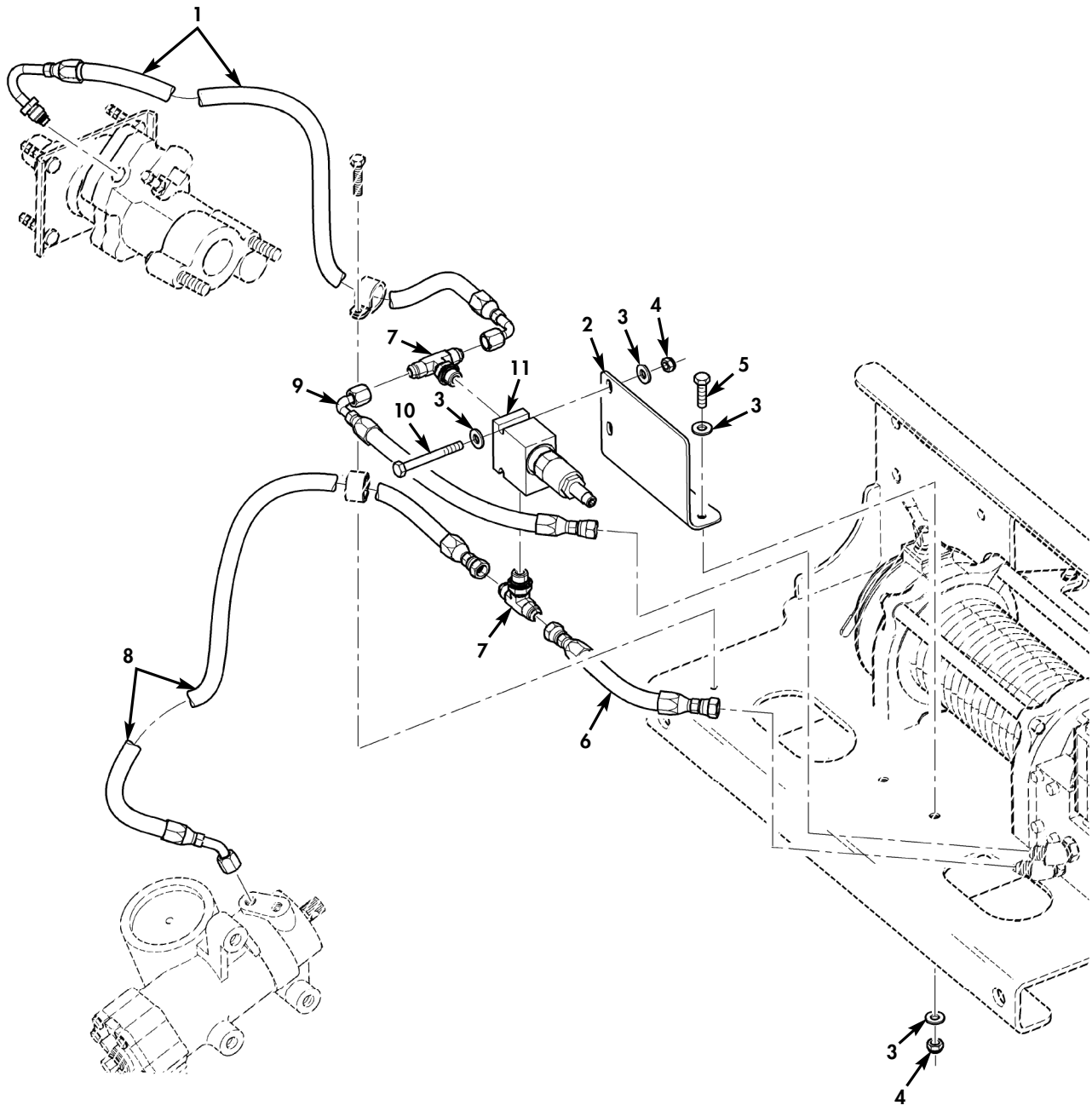

Figure 225K. Hydraulic Winch Pressure Relief Valve Kit and Related Parts (Serial Numbers 246890 and Above).

(1) ITEM NO	(2) SMR CODE	(3) NSN	(4) CAGEC	(5) PART NUMBER	(6) DESCRIPTION AND USABLE ON CODES(UOC)	(7) QTY
					GROUP 2001 WINCH ASSEMBLY	
					FIG. 225K HYDRAULIC WINCH PRESSURE RELIEF VALVE KIT AND RELATED PARTS (SERIAL NUMBER 246890 AND ABOVE)	
* 1	PAOZZ		19207	12506912	HOSE ASSY,HYDRAULIC VALVE TO HYDROBOOST PART OF KIT P/N 57K4899.. UOC:TTA,TTT,TT1,UUA,UUU,UU1,UU2,XAA	1
* 2	PAOZZ		19207	12506891	SUPPORT,RELIEF VALV PART OF KIT P/N 57K4899..... UOC:TTA,TTT,TT1,UUA,UUU,UU1,UU2,XAA	1
* 3	PAOZZ	5310011023270	34623	2436161	WASHER,FLAT 1/4 PART OF KIT P/N 57K4899..... UOC:TTA,TTT,TT1,UUA,UUU,UU1,UU2,XAA	8
* 4	PAOZZ	5310015101237	81349	M45913/4-4CG8C	NUT,SELF-LOCKING,HE 1/4-20 PART OF KIT P/N 57K4899..... UOC:TTA,TTT,TT1,UUA,UUU,UU1,UU2,XAA	4
* 5	PAOZZ	5305002253843	80204	B1821BH025C100N	SCREW,CAP,HEXAGON H 1/4-20 X 1.00 PART OF KIT P/N 57K4899..... UOC:TTA,TTT,TT1,UUA,UUU,UU1,UU2,XAA	2
* 6	PAOZZ		19207	12506889	HOSE ASSEMBLY,HYDRA WINCH TO TEE PART OF KIT P/N 57K4899..... UOC:TTA,TTT,TT1,UUA,UUU,UU1,UU2,XAA	1
* 7	PAOZZ		81343	6-6-6 070429	TEE FITTING PART OF KIT P/N 57K4899. UOC:TTA,TTT,TT1,UUA,UUU,UU1,UU2,XAA	2
* 8	PAOZZ		19207	12506911	HOSE ASSY,HYDRAULIC WINCH TO POWER STEERING GEAR PART OF KIT P/N..... UOC:TTA,TTT,TT1,UUA,UUU,UU1,UU2,XAA	1
* 9	PAOZZ		19207	12506890	HOSE ASSY,HYDRAULIC WINCH TO TEE PART OF KIT P/N 57K4899..... UOC:TTA,TTT,TT1,UUA,UUU,UU1,UU2,XAA	1
* 10	PAOZZ	5305000712511	80204	B1821BH025C200N	SCREW,CAP,HEXAGON H 1/4-20 X 2.00 PART OF KIT P/N 57K4899..... UOC:TTA,TTT,TT1,UUA,UUU,UU1,UU2,XAA	2
* 11	PAOZZ		0GZ87	34-50160	VALVE,REGULATING PRESSURE RELIEF VALVE PART OF KIT P/N 57K4899..... UOC:TTA,TTT,TT1,UUA,UUU,UU1,UU2,XAA	1

END OF FIGURE

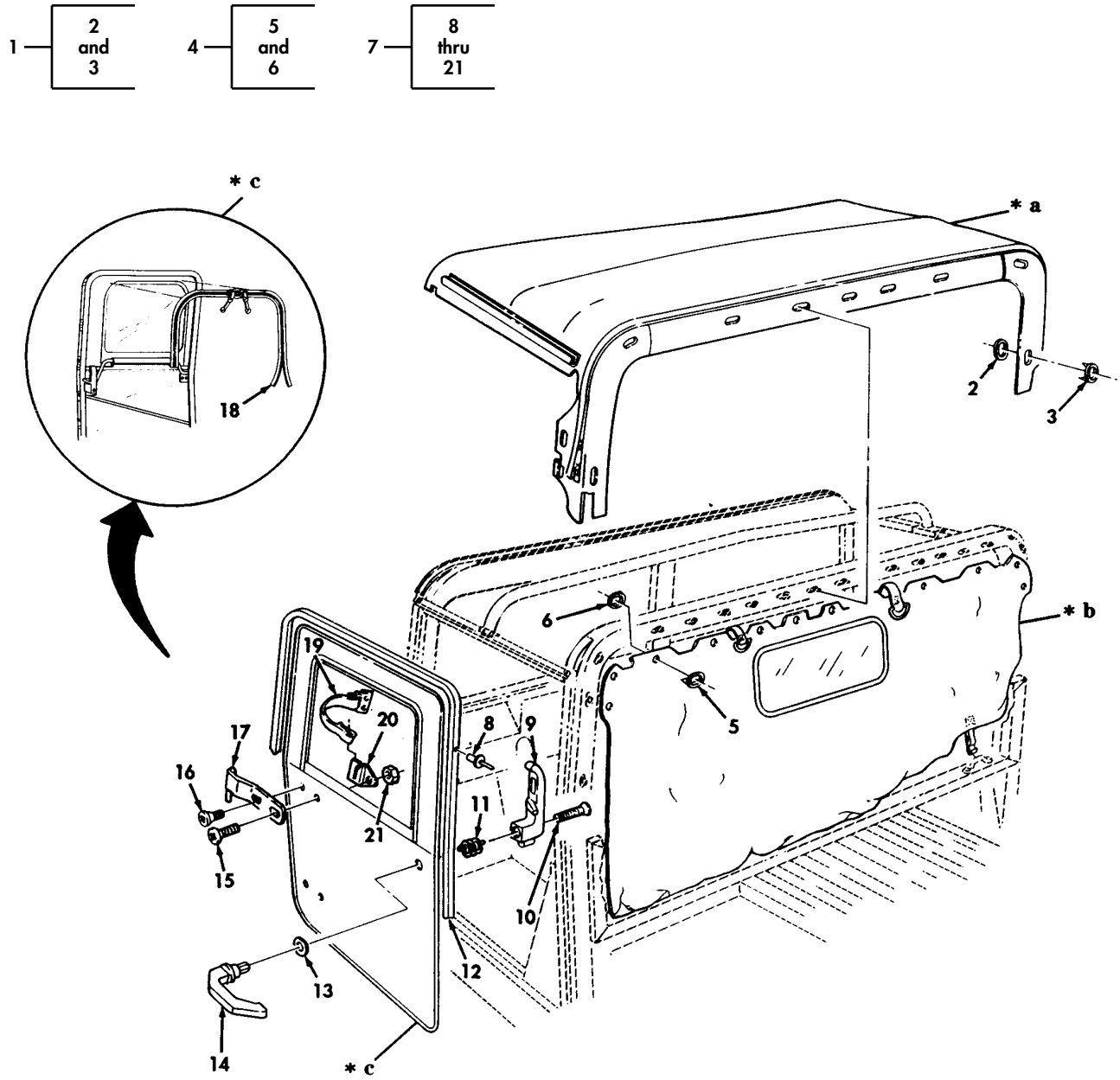

✱ **a** PART OF ITEM 1
✱ **b** PART OF ITEM 4
✱ **c** PART OF ITEM 7

Figure 226. Two-Man Crew Soft Top Enclosure, Top Assembly, Rear Curtain, and Door Assemblies.

(1) ITEM NO	(2) SMR CODE	(3) NSN	(4) CAGEC	(5) PART NUMBER	(6) DESCRIPTION AND USABLE ON CODES(UOC)	(7) QTY
					GROUP 22 BODY,CHASSIS,AND HULL ACCESSORY ITEMS	
					2201 CANVAS.RUBBER OR PLASTIC ITEMS	
					FIG. 226 TWO-MAN CREW SOFT TOP ENCLOSURE,TOP ASSEMBLY,REAR CURTAIN AND DOOR ASSEMBLIES	
* 1	PAOFF	2540014504017	19207	12340736-18	COVER,FITTED,VEHICU CAMO,PART OF KIT P/N 57K3496..... UOC:UUU,XAA	1
* 1	PAOFF	2540013306173	19207	12340736-8	COVER,FITTED,VEHICU TAN,PART OF KIT P/N 57K0156..... UOC:UUU,XAA	1
* 1	PAOFF	2540014504021	19207	12340736-13	COVER,FITTED,VEHICU WHITE,PART OF KIT P/N 57K0162..... UOC:UUU,XAA	1
* 2	PAFZZ	5325003718108	13940	BS 78505	.CLINCH PLATE,TURNBU..... UOC:UUU,XAA	23
* 3	PAFZZ	5325002818642	61864	400	.SOCKET,TURNBUTTON F..... UOC:UUU,XAA	23
* 4	PAOFF	2540014504018	19207	12340737-2	CURTAIN,VEHICULAR TAN,PART OF KIT P/N 57K0156..... UOC:UUU,XAA	1
* 4	PAOFF	2540014079241	19207	12340737-3	CURTAIN,VEHICULAR WHITE,PART OF KIT P/N 57K0162..... UOC:UUU,XAA	1
* 5	PAFZZ	5325002818643	13940	91-BS-78403-1E	.SOCKET,TURNBUTTON F..... UOC:UUU,XAA	12
* 6	PAFZZ	5325003718108	13940	BS 78505	.CLINCH PLATE,TURNBU..... UOC:UUU,XAA	12
* 7	PAOFF	2510014505480	19207	12340231-10	DOOR,VEHICULAR L.H.,CAMO,PART OF KIT P/N 57K3496..... UOC:UUU,XAA	1
* 7	PAOFF	2510014505479	19207	12340231-11	DOOR,VEHICULAR R.H.,CAMO,PART OF KIT P/N 57K3496..... UOC:UUU,XAA	1
* 7	PAOFF	2510011336174	19207	12340231-3	DOOR,VEHICULAR L.H.,TAN,PART OF KIT P/N 57K0156..... UOC:UUU,XAA	1
* 7	PAOFF	2510013306175	19207	12340231-4	DOOR,VEHICULAR R.H.,TAN,PART OF KIT P/N 57K0156..... UOC:UUU,XAA	1
* 7	PAOFF	2510014076037	19207	12340231-5	DOOR,VEHICULAR L.H.,WHITE,PART OF KIT P/N 57K0162..... UOC:UUU,XAA	1
* 7	PAOFF	2510014076036	19207	12340231-6	DOOR,VEHICULAR R.H.,WHITE,PART OF KIT P/N 57K0162..... UOC:UUU,XAA	1
* 8	PAOZZ	5320010232529	81349	M24243/1-A404	.RIVET,BLIND 1/8..... UOC:UUU,XAA	18
* 9	PAOZZ	2540012001994	19207	12301363-1	.HANDLE,DOOR,VEHICUL INSIDE,R.H	1

(1) ITEM NO	(2) SMR CODE	(3) NSN	(4) CAGEC	(5) PART NUMBER	(6) DESCRIPTION AND USABLE ON CODES(UOC)	(7) QTY
					PART OF KIT P/N 5705618..... UOC:UUU,XAA	
* 9	PAOZZ	2540012037721	19207	12301363-2	.HANDLE,DOOR,VEHICUL INSIDE,L.H. PART OF IT P/N 57056198..... UOC:UUU,XAA	1
* 10	PAOZZ	5305000711327	96906	MS51960-70	.SCREW,MACHINE #10-32 X 1.25 PART OF KIT P/N 5705618 PART OF KIT P/N 5705619..... UOC:UUU,XAA	1
* 11	PAOZZ	5306013157211	19207	12356764-2	.SPRING,HELICAL,TORS R.H.,PART OF KIT P/N 5705618..... UOC:UUU,XAA	1
* 11	PAOZZ	5306013157212	19207	12356764-1	.SPRING,HELICAL,TORS L.H.,PART OF KIT P/N 5705619..... UOC:UUU,XAA	1
* 12	MOOZZ		41024	21022103-150IN.	.SEAL,NONMETALLIC SP MAKE FROM SEAL P/N 21022103,150 INCHES LONG..... UOC:UUU,XAA	1
* 13	PAOZZ	5310012059056	34623	5581321	.WASHER,FLAT 5/8 PART OF KIT P/N 5705618 PART OF KIT P/N 5705619..... UOC:UUU,XAA	1
* 14	PAOZZ	2540012001995	19207	12301365	.HANDLE,DOOR,VEHICUL PART OF KIT... P/N 5705618 PART OF KIT P/N 5705619 UOC:UUU,XAA	1
* 15	PAOZZ	5305009881725	96906	MS35206-281	.SCREW,MACHINE 1/4-20 X 3/4..... UOC:UUU,XAA	1
* 16	PAOZZ	5305000711315	96906	MS51957-79	.SCREW.MACHINE 1/4-20 X 1/2..... UOC:UUU,XAA	3
* 17	PAOZZ	5340012059021	19207	12340193-1	.LEAF,BUTT HINGE L.H..... UOC:UUU,XAA	2
* 17	PAOZZ	5340012059022	19207	12340193-2	.LEAF.BUTT HINGE R.H..... UOC:UUU,XAA	2
* 18	PAOZZ	5325013571080	19207	123401212-3	.FASTENER,SLIDE,INTE..... UOC:UUU,XAA	1
* 19	PAOZZ	5340012547189	19207	12340201	.LOOP,STRAP FASTENER..... UOC:UUU,XAA	1
* 20	PAOZZ	5340012569318	19207	12340214-1	.LOOP,STRAP FASTENER L.H..... UOC:UUU,XAA	1
* 20	PAOZZ	5340012559919	34623	5595217	.LOOP,STRAP FASTENER R.H..... UOC:UUU,XAA	1
* 21	PAOZZ	5310000614650	96906	M45913/3-4CG8C	.NUT,SELF-LOCKING 1/4-20..... UOC:UUU,XAA	4

END OF FIGURE

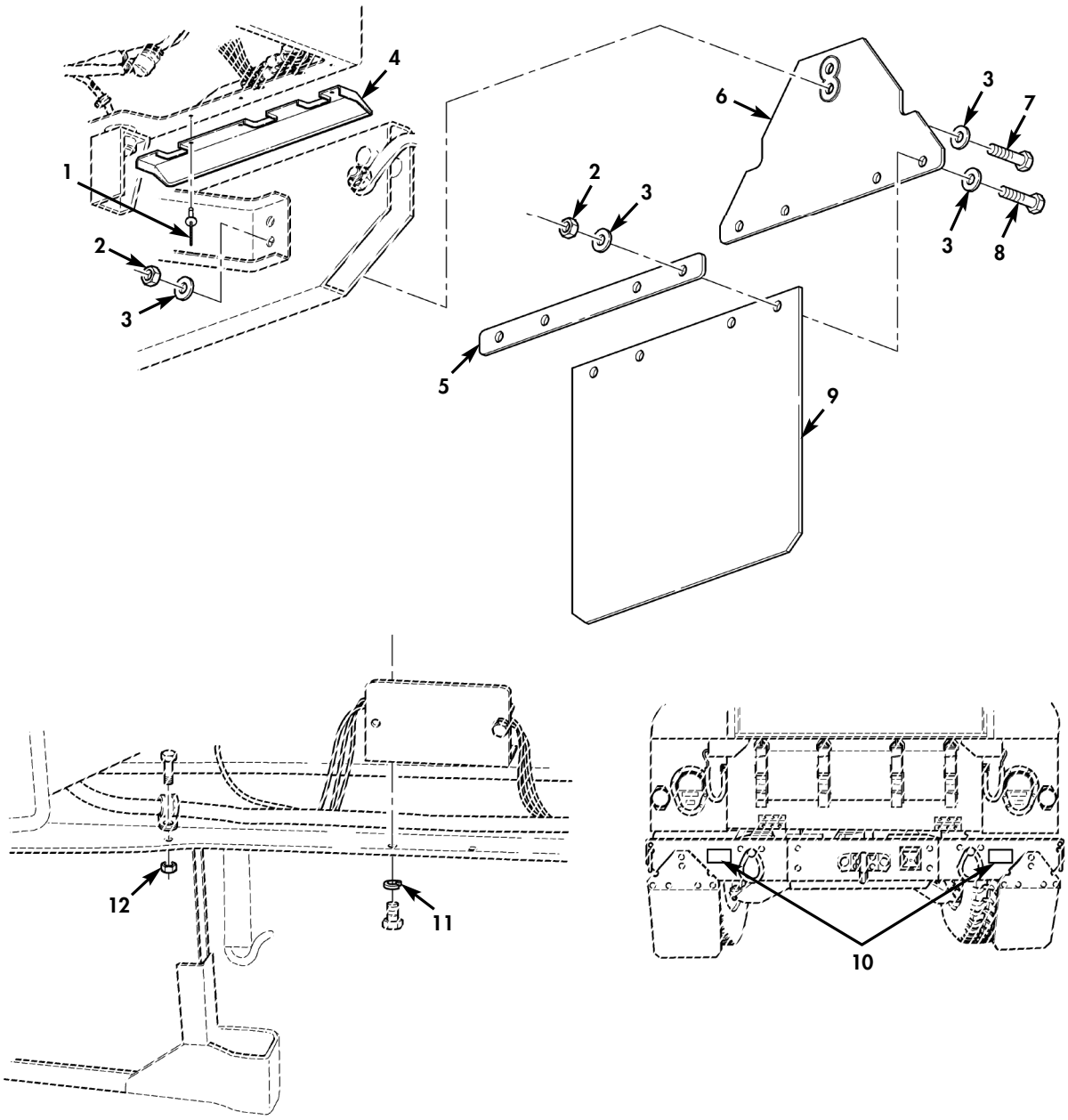

Figure 226A. Mudflaps.

(1) ITEM NO	(2) SMR CODE	(3) NSN	(4) CAGEC	(5) PART NUMBER	(6) DESCRIPTION AND USABLE ON CODES(UOC)	(7) QTY
					GROUP 22 BODY,CHASSIS,AND HULL ACCESSORY ITEMS 2201 CANVAS,RUBBER OR PLASTIC ITEMS	
					FIG. 226A MUDFLAPS	
* 1	PAOZZ	5320004902243	81349	M24243/3-A610	RIVET,BLIND PART OF KIT P/N 57K4403.	6
* 2	PAOZZ	5310015481848	81349	M45913/4-8CG8Z	NUT,SELF-LOCKING,HE 1/2-13 PART OF KIT P/N 57K4403.....	12
* 3	PAOZZ	5310012447459	29510	120396	WASHER,FLAT 1/2 PART OF KIT P/N 57K4403.....	24
* 4	PAOZZ	2590015390647	34623	12480595-1	BRACKET,VEHICULAR C L.H. PART OF KIT P/N 57K4403.....	1
* 4	PAOZZ	2590015390673	34623	5716636	BRACKET,VEHICULAR C R.H. PART OF KIT P/N 57K4403.....	1
* 5	PAOZZ	5340015663111	19207	12480587	PLATE,MOUNTING PART OF KIT P/N 57K4403.....	2
* 6	PAOZZ	5340015385849	34623	RCSK19805	BRACKET,MOUNTING PART OF KIT P/N 57K4403.....	2
* 7	PAOZZ	5305000712076	80204	B1821BH050C325N	SCREW,CAP,HEXAGON H 1/2-13 X 3.25 PART OF KIT P/N 57K4403.....	4
* 8	PAOZZ	5305000712069	80204	B1821BH050C150N	SCREW,CAP,HEXAGON H 1/2-13 X 1.50 PART OF KIT P/N 57K4403.....	8
* 9	PAOZZ	2540015390180	34623	6011599	GUARD,SPLASH,VEHICU PART OF KIT P/N 57K4403.....	2
* 10	PAOZZ	7690015659187	19207	12339058	MARKER,IDENTIFICATI SLING AND TIE-DOWN PART OF KIT P/N 57K4403....	2
* 11	PAOZZ	5310005825965	80205	MS35338-44	WASHER,LOCK 1/4 PART OF KIT P/N 57K4403.....	4
* 12	PAOZZ	5310001249265	72582	271169	NUT,PLAIN,ASSEMBLED 10-32 PART OF KIT P/N 57K4403.....	2

END OF FIGURE

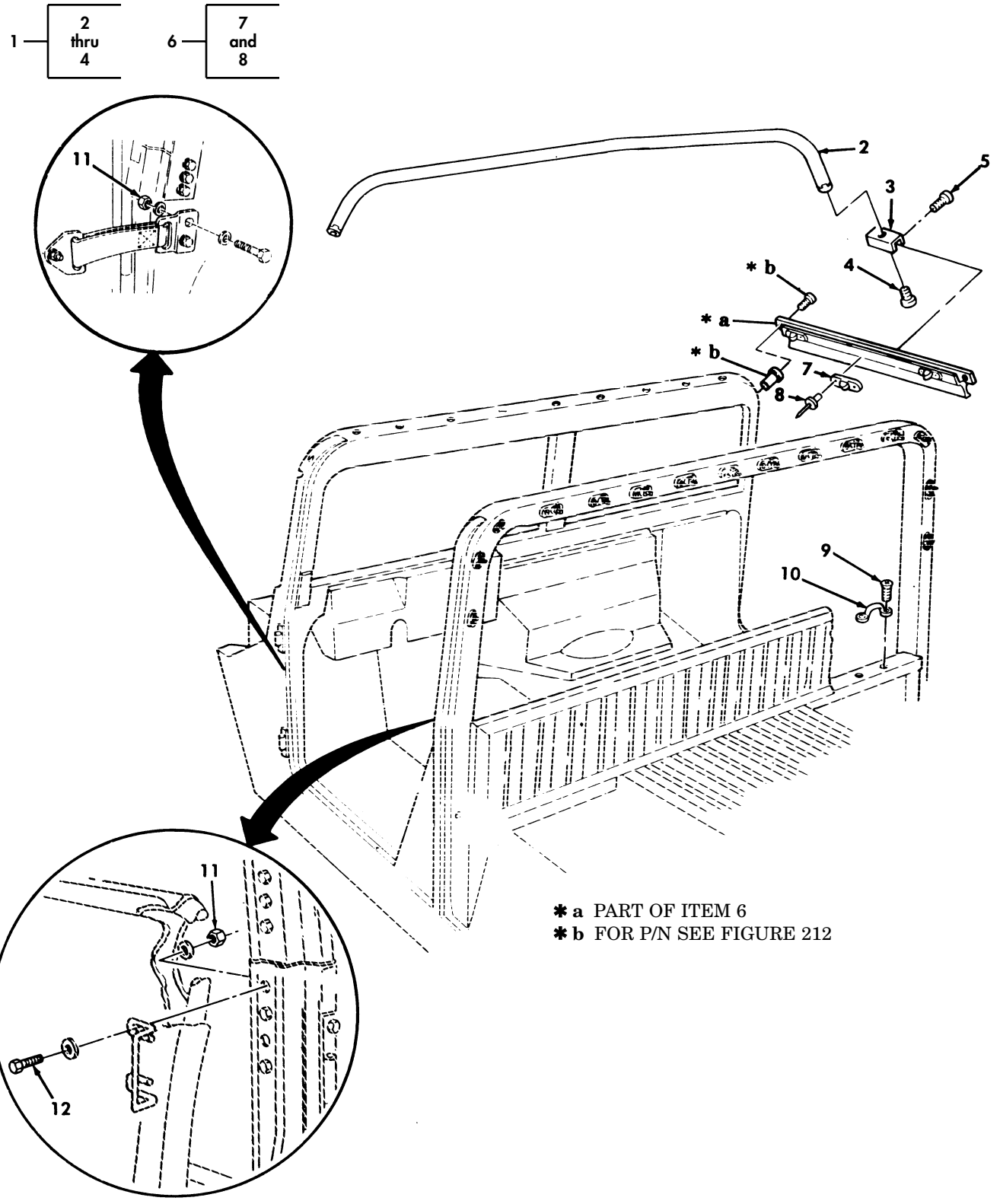

Figure 227. Two-Man Crew Soft Top Enclosure, Bow, and Mounting Components.

(1) ITEM NO	(2) SMR CODE	(3) NSN	(4) CAGEC	(5) PART NUMBER	(6) DESCRIPTION AND USABLE ON CODES(UOC)	(7) QTY
					GROUP 2201 CANVAS,RUBBER OR PLASTIC ITEMS	
					FIG. 227 TWO-MAN CREW SOFT TOP ENCLOSURE,BOW,AND MOUNTING COMPONENTS	
* 1	PAOZZ	2540011996759	19207	12340682	BOW,VEHICULAR TOP PART OF KIT P/N PART OF KIT P/N 57K3496 PART OF KIT P/N 57K0156 PART OF KIT P/N 57K0162..... UOC:UUU,XAA	1
* 2	PAOZZ	2540012064115	19207	12340713	.BOW,VEHICULAR TOP..... UOC:UUU,XAA	1
* 3	PFOZZ	5340012043862	19207	12340239	.STRAP,RETAINING..... UOC:UUU,XAA	2
* 4	PAOZZ	5305012038346	34623	5581439	.SCREW,CAP,SOCKET HE 1/4-20 X 3/8.. UOC:UUU,XAA	2
* 5	PAOZZ	5305009897434	96906	MS35207-263	SCREW,MACHINE #10-32 X .500 PART OF KIT P/N 57K3496 PART OF KIT P/N 57K0156 PART OF KIT P/N 57K0162..... UOC:UUU,XAA	4
* 6	PFOZZ	2590011982895	34623	5581371	HANDRAIL,VEHICULAR L.H.,PART OF KIT P/N 57K3496 PART OF KIT P/N 57K0156 PART OF KIT P/N 57K0162..... UOC:UUU,XAA	1
* 6	PFOZZ	2590011974898	34623	5581372	HANDRAIL,VEHICULAR R.H.,PART OF KIT P/N 57K3496 PART OF KIT P/N 57K0156 PART OF KIT P/N 57K0162..... UOC:UUU,XAA	1
* 7	PAOZZ	5325008235999	13940	XB78323-05001	.STUD,TURNBUTTON FAS L.H. AND R.H.. UOC:UUU,XAA	6
* 8	PAOZZ	5320000835009	81349	M24243/1-A403	.RIVET,BLIND 1/8,L.H. AND R.H..... UOC:UUU,XAA	12
* 9	PAOZZ	5305011993371	16941	PL25J02P12	SCREW,CAP,SOCKET HE #10-32 X 3/4... UOC:UUU,XAA	4
* 10	PAOZZ	5340011978673	19207	12338839-4	HANDLE,BOW REAR..... UOC:UUU,XAA	2
* 11	PAOZZ	5310002416658	96906	MS51943-34	NUT,SELF-LOCKING,HE 5/16-24,PART OF KIT P/N 57K3496 PART OF KIT P/N 57K0156 PART OF KIT P/N 57K0162..... UOC:UUU,XAA	8
* 12	PAOZZ	5306001822027	88044	AN5H10A	BOLT,MACHINE PART OF KIT P/N 57K3496 PART OF KIT P/N 57K0156 PART OF KIT P/N 57K0162..... UOC:UUU,XAA	4
*KIT	PDOZZ	2540014348600	19207	57K3496	COVER,FITTED,VEHICU CAMOFLUAGE..... UOC:UUU	1
					BOLT,MACHINE (4) 227-12	
					BOW,VEHICULAR TOP (1) 227-1	
					COVER,FITTED,VEHICU(1) 226-1	
					CURTAIN,VEHICULAR (1) 226-4	
					DOOR,VEHICULAR (1) 226-7	

(1) ITEM NO	(2) SMR CODE	(3) NSN	(4) CAGEC	(5) PART NUMBER	(6) DESCRIPTION AND USABLE ON CODES(UOC)	(7) QTY
					DOOR,VEHICULAR (1) 226-7	
					HANDRAIL,VEHICULAR (1) 227-6	
					HANDRAIL,VEHICULAR (1) 227-6	
					NUT,SELF-LOCKING,HE(8) 227-11	
					SCREW,MACHINE (4) 227-5	
*KIT	PDOZZ	2540013298072	19207	57K0156	COVER,FITTED,VEHICU TAN.....	1
					UOC:UUU,XAA	
					BOLT,MACHINE (4) 227-12	
					BOW,VEHICULAR TOP (1) 227-1	
					COVER,FITTED,VEHICU(1) 226-1	
					CURTAIN,VEHICULAR (1) 226-4	
					DOOR,VEHICULAR (1) 226-7	
					DOOR,VEHICULAR (1) 226-7	
					HANDRAIL,VEHICULAR (1) 227-6	
					HANDRAIL,VEHICULAR (1) 227-6	
					NUT,SELF-LOCKING,HE(8) 227-11	
					SCREW,MACHINE (4) 227-5	
*KIT	PDOZZ	2540013994692	19207	57K0162	COVER,FITTED,VEHICU WHITE.....	1
					UOC:UUU,XAA	
					BOLT,MACHINE (4) 227-12	
					BOW,VEHICULAR TOP (1) 227-1	
					COVER,FITTED,VEHICU(1) 226-1	
					CURTAIN,VEHICULAR (1) 226-4	
					DOOR,VEHICULAR (1) 226-7	
					DOOR,VEHICULAR (1) 226-7	
					HANDRAIL,VEHICULAR (1) 227-6	
					HANDRAIL,VEHICULAR (1) 227-6	
					NUT,SELF-LOCKING,HE(8) 227-11	
					SCREW,MACHINE (4) 227-5	

END OF FIGURE

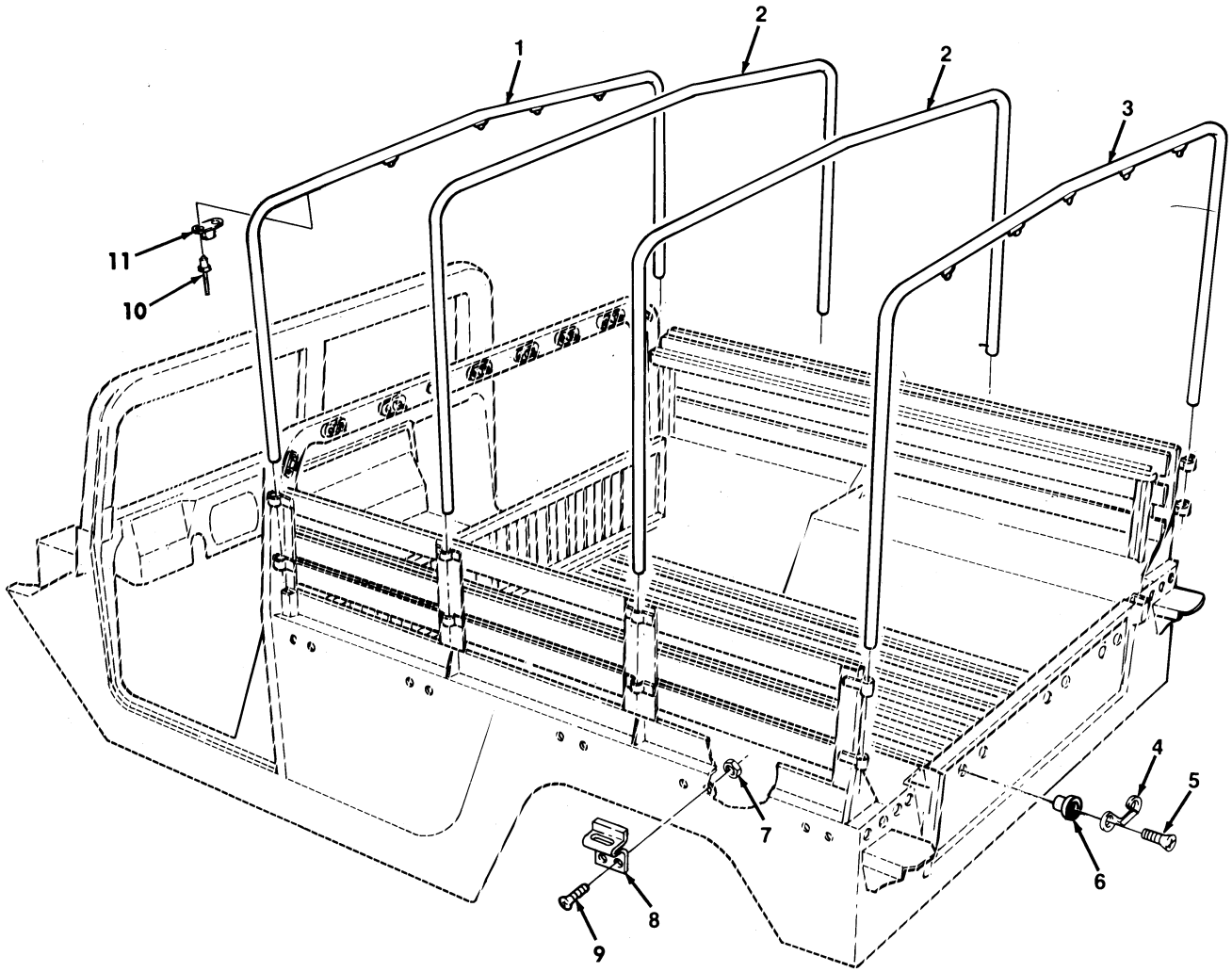

Figure 227A. Troop Area Soft Top Enclosure, Bows, and Mounting Components.

(1) ITEM NO	(2) SMR CODE	(3) NSN	(4) CAGEC	(5) PART NUMBER	(6) DESCRIPTION AND USABLE ON CODES(UOC)	(7) QTY
					GROUP 2201 CANVAS,RUBBER OR PLASTIC ITEMS	
					FIG. 227A TROOP AREA SOFT TOP ENCLOSURE,BOWS,AND MOUNTING COMPONENTS	
* 1	PFOZZ	2540012006611	19207	12340764-2	BOW,VEHICULAR,TOP FRONT,GREEN (PAINT TAN OR WHITE IF REQUIRED) PART OF KIT P/N 12340744 PART OF KIT P/N 57K0160 PART OF KIT P/N 57K3500 PART OF KIT P/N 57K0157..... UOC:UUU	1
* 2	PFOZZ	2540011996760	19207	12340747	BOW,VEHICULAR,TOP GREEN (PAINT TAN OR WHITE IF REQUIRED) PART OF KIT P/N 12340744 PART OF KIT P/N 57K0160 PART OF KIT P/N 57K3500 PART OF KIT P/N 57K0157..... UOC:UUU	2
* 3	PFOZZ	2540011996761	19207	12340764-1	BOW,VEHICULAR,TOP GREEN (PAINT TAN PR WHITE IF REQUIRED) PART OF KIT P/N 12340744 PART OF KIT P/N 57K0160 PART OF KIT P/N 57K3500 PART OF KIT P/N 57K0157..... UOC:UUU	1
* 4	PAOZZ	5340013145957	19207	12338839-1	LOOP,STRAP FASTENER PART OF KIT P/N 57K3499..... UOC:UUU	3
* 5	PAOZZ	5305011993371	19207	12339519	SCREW,CAP,SOCKET HE #10-32 X 3/4... UOC:UUU	6
* 6	PFOZZ	5310011981723	19207	12339998-14	NUT,PLAIN,BLIND RIV #10-32..... UOC:UUU	6
* 7	PAOZZ	5310001249265	72582	271169	NUT,PLAIN,ASSEMBLED #10-32..... UOC:UUU	20
* 8	PAOZZ	5340012609027	34623	5593625	LOOP,STRAP FASTENER..... UOC:UUU	10
* 9	PAOZZ	5305014077713	24617	160052	SCREW,MACHINE #10-32 X 5/8..... UOC:UUU	20
* 10	PAOZZ	5320010232529	81349	M242243/1A404	RIVET,BLIND..... UOC:UUU	20
* 11	PAOZZ	5325008235999	13940	XB78323-05001	STUD,TURNBUTTON FAST..... UOC:UUU	10

END OF FIGURE

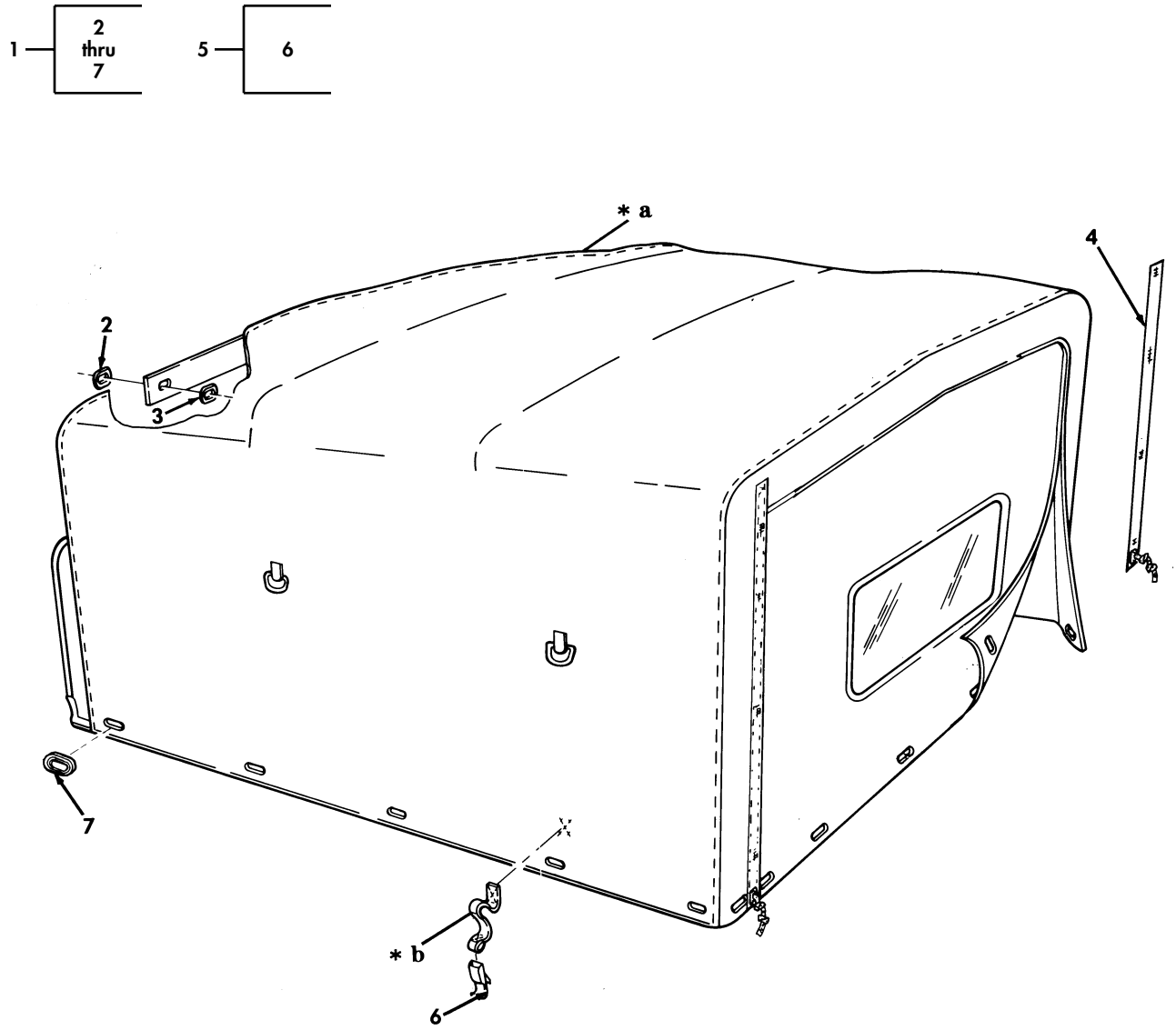

✱ **a** PART OF ITEM 1
✱ **b** PART OF ITEM 5

Figure 227B. Troop Area Soft Top Enclosure.

(1) ITEM NO	(2) SMR CODE	(3) NSN	(4) CAGEC	(5) PART NUMBER	(6) DESCRIPTION AND USABLE ON CODES(UOC)	(7) QTY
					GROUP 2201 CANVAS,RUBBER OR PLASTIC ITEMS	
					FIG. 227B TROOP AREA SOFT TOP ENCLOSURE	
* 1	PAOFF	2540014504015	19207	12340761-9	COVER,FITTED,VEHICU CAMOUFLAGE PART OF KIT P/N 57K3500..... UOC:UUU	1
* 1	PAOFF	2540014507686	19207	12340761-3	COVER,FITTED VEHICU WHITE PART OF KIT P/N 57K0160..... UOC:UUU	1
* 1	PAOFF	2540013306169	19207	12340761-2	COVER,FITTED,VEHICU TAN PART OF KIT P/N 57K0157..... UOC:UUU	1
* 2	PAFZZ	5325002818643	13940	91-BS-78403	.SOCKET,TURNBUTTON F..... UOC:UUU	19
* 3	PAFZZ	5325003718108	13940	BS 78505	.CLINCH PLATE,TURNBU..... UOC:UUU	19
* 4	PAFZZ	2590013162581	38506	52252	.MODIFICATION KIT,VE..... UOC:UUU	2
* 5	PAFZZ	5340014141454	19207	12340517-1	.STRAP,RETAINING..... UOC:UUU	17
* 6	PAOZZ	5340012036542	31272	44702-10	..BUCKLE..... UOC:UUU	1
* 7	PAOZZ	5325014374175	33729	12340526	.GROMMET,NONMETALLIC..... UOC:UUU	17
*KIT	PAOZZ	2540014504022	19207	57K0160	COVER,FITTED,VEHICUL WHITE..... UOC:UUU BOW,VEHICULAR TOP (1) 227A-1 BOW,VEHICULAR TOP (2) 227A-2 BOW,VEHICULAR TOP (1) 227A-3 COVER,FITTED VEHICU(1) 227B-1	1
*KIT	PAOZZ	2540014348602	19207	57K3500	COVER,FITTED VEHICUL STANDARD CAMOUFLAGE,TROOP AREA ENCLOSURE UOC:UUU BOW,VEHICULAR TOP (1) 227A-1 BOW,VEHICULAR TOP (2) 227A-2 BOW,VEHICULAR TOP (1) 227A-3 COVER,FITTED VEHICU(1) 227B-1	1
*KIT	PAOZZ	2540013298073	19207	57K0157	PARTS KIT,SOFT TOP TROOP AREA TAN UOC:UUU BOW,VEHICULAR TOP (1) 227A-1 BOW,VEHICULAR TOP (2) 227A-2 BOW,VEHICULAR TOP (1) 227A-3 COVER,FITTED VEHICU(1) 227B-1	1

END OF FIGURE

UNIT, DIRECT SUPPORT, AND GENERAL SUPPORT MAINTENANCE
REPAIR PARTS AND SPECIAL TOOLS LIST

TRUCK, UTILITY: S250 SHELTER CARRIER, 4X4, M1113 (2320-01-412-0143),
TRUCK, UTILITY: UP-ARMORED CARRIER, 4X4, M1114 (2320-01-413-3739),
TRUCK, UTILITY: EXPANDED CAPACITY, ARMAMENT CARRIER, 4X4, M1151 (2320-01-518-7330),
TRUCK, UTILITY: EXPANDED CAPACITY, ENHANCED, 4X4, M1152 (2320-01-518-7332)

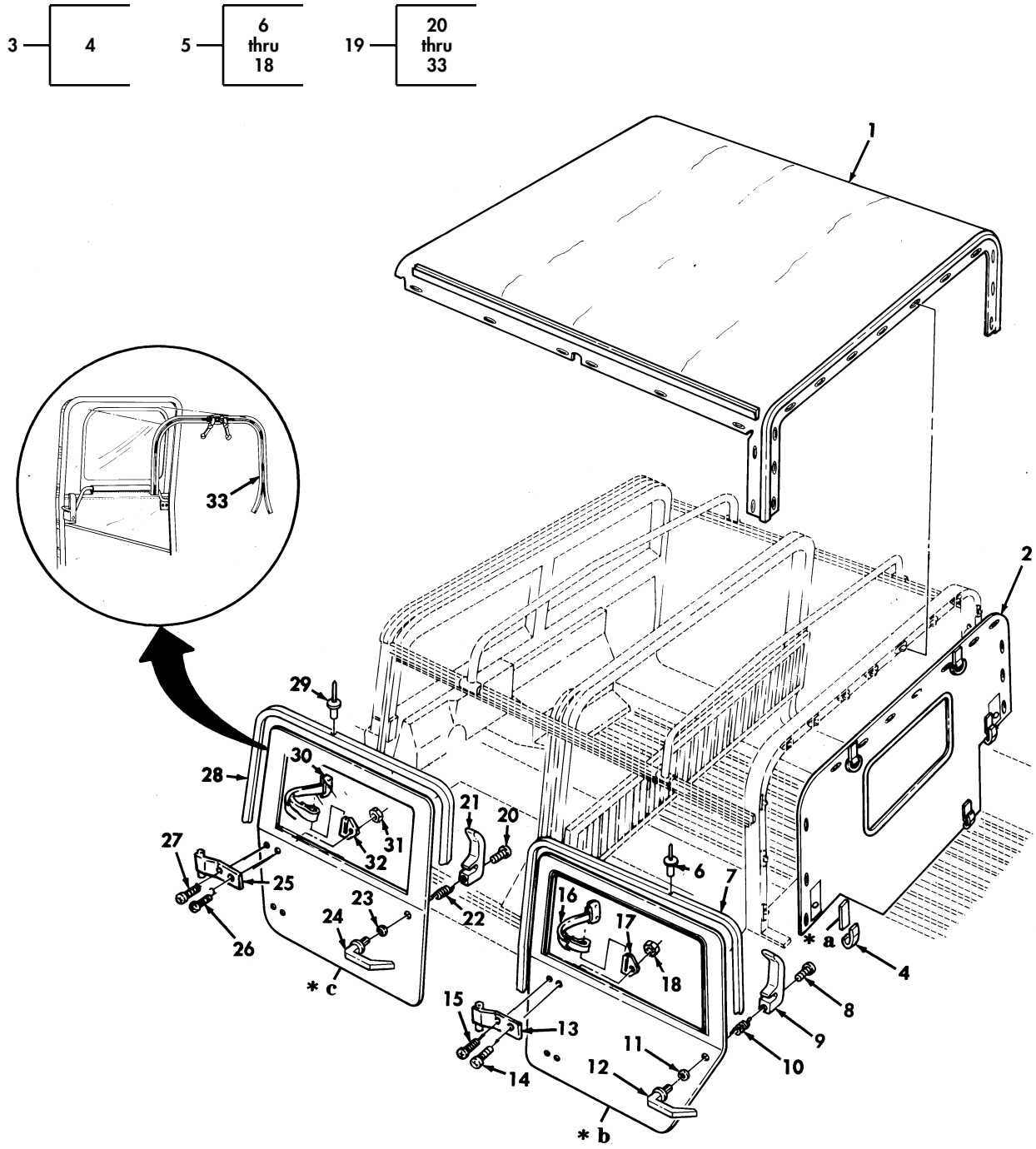

✱ **a** PART OF ITEM 3
✱ **b** PART OF ITEM 5
✱ **c** PART OF ITEM 19

Figure 227C. Four-Man Crew Soft Top Enclosure, Top Assembly, Rear Curtain, and Door Assemblies.

(1) ITEM NO	(2) SMR CODE	(3) NSN	(4) CAGEC	(5) PART NUMBER	(6) DESCRIPTION AND USABLE ON CODES(UOC)	(7) QTY
					GROUP 2201 CANVAS,RUBBER OR PLASTIC ITEMS	
					FIG 227C FOUR MAN CREW SOFT TOP ENCLOSURE,TOP ASSEMBLY,REAR CURTAIN,AND DOOR ASSEMBLIES	
* 1	PAOFF	2540013306177	19207	12340676-11	COVER,FITTED,VEHICL TAN PART OF KIT 57K0155..... UOC:UUU	1
* 1	PAOFF	2540014504019	19207	12340676-31	COVER,FITTED,VEHICL CAMOUFLAGE PART OF KIT P/N 57K3501..... UOC:UUU	1
* 1	PAOFF	2540014122661	19207	12340676-21	COVER,FITTED,VEHICL WHITE PART OF KIT P/N 57K0161..... UOC:UUU	1
* 2	PAOFF	2540014505477	19207	12342475-6	CURTAIN,VEHICULAR CAMOUFLAGE PART OF KIT P/N 57K3501..... UOC :UUU	1
* 2	PAOFF	2540013306172	19207	12342475-1	CURTAIN,VEHICULAR TAN PART OF KIT P/N 57K0155..... UOC:UUU	1
* 2	PAOFF	2540014131356	19207	12342475-2	CURTAIN,VEHICULAR WHITE PART OF KIT P/N 57K0161..... UOC:UUU	1
* 3	PFOZZ	5340014141454	19207	12340517-1	STRAP,RETAINING..... UOC:UUU	4
* 4	PAOZZ	5340012036542	31272	44702-10	.BUCKLE..... UOC:UUU	1
* 5	PAOFF	2510013306176	19207	12340245-3	DOOR ASSEMBLY,VE R.H.,TAN PART OF KIT P/N 57K0155..... UOC:UUU	1
* 5	PAOFF	2510013306576	19207	12340245-4	DOOR ASSEMBLY,VE L.H.,TAN PART OF KIT P/N 57K0155..... UOC:UUU	1
* 5	PAOFF	2510014126761	34623	12340245-5	DOOR ASSEMBLY,VE R.H.,WHITE PART OF KIT P/N 57K0161..... UOC:UUU	1
* 5	PAOFF	2510014138872	34623	12340245-6	DOOR ASSEMBLY,VE L.H.,WHITE PART OF KIT P/N 57K0161..... UOC:UUU	1
* 5	PAOFF	2510014505482	19207	12340245-7	DOOR ASSEMBLY,VE R.H.,CAMOUFLAGE PART OF KIT P/N 57K3501..... UOC:UUU	1
* 5	PAOFF	2540014505483	19207	12340245-8	DOOR ASSEMBLY,VE L.H.,CAMOUFLAGE PART OF KIT P/N 57K3501..... UOC:UUU	1
* 6	PAOZZ	5320010232529	81349	M24243/1A404	.RIVET,BLIND 1/8..... UOC:UUU	18
* 7	MOOZZ		41024	21022013-150IN.	.SEAL,NONMETALLIC SP MAKE FROM SEAL P/N 21022103,150 INCHES LONG.....	1
* 8	PAOZZ	5305000711327	96906	MS51960-70	.SCREW,MACHINE #10-32 X 1.25 PART OF KIT P/N 5705618 PART OF KIT P/N	1

(1) ITEM NO	(2) SMR CODE	(3) NSN	(4) CAGEC	(5) PART NUMBER	(6) DESCRIPTION AND USABLE ON CODES(UOC)	(7) QTY
					5705619..... UOC:UUU	
* 9	PAOZZ	2540012001994	34623	5581320	.HANDLE,DOOR,VEHIC R.H.,REAR PART KIT P/N 5705618..... UOC:UUU	1
* 9	PAOZZ	2540012037721	19207	12301363-2	.HANDLE,DOOR VEHIC L.H.,REAR PART OF KIT P/N 5705619..... UOC:UUU	1
* 10	PAOZZ	5360013157212	19207	12356764-1	.SPRING,HELICAL TOR L.H. PART OF KIT P/N 5705619..... UOC:UUU	1
* 10	PAOZZ	5360013157211	19207	12346764-2	.SPRING,HELICAL TOR R.H. PART OF KIT P/N 5705618..... UOC:UUU	1
* 11	PAOZZ	5310012059056	34623	5581321	.WASHER,FLAT PART OF KIT P/N 5705618 PART OF KIT P/N 5705619..... UOC:UUU	1
* 12	PAOZZ	2510012001995	19207	12301365	.HANDLE,DOOR,VEHIC PART OF KIT P/N 5705618 PART OF KIT P/N 5705619..... UOC:UUU	1
* 13	PAOZZ	5340012059021	19207	12340193-1	.LEAF,BUTT HINGE L.H.,REAR..... UOC:UUU	2
* 13	PAOZZ	5340012059022	34623	12340193-2	.LEAF,BUTT HINGE R.H.,REAR..... UOC:UUU	2
* 14	PAOZZ	5305009881725	80205	NASM35206-281	.SCREW,MACHINE 1/4-20 X 3/4..... UOC:UUU	1
* 15	PAOZZ	5305000711315	96906	MS51957-79	.SCREW,MACHINE 1/4-20 X 1/2..... UOC:UUU	3
* 16	PAOZZ	5340012547189	19207	12340201	.LOOP,STRAP FASTE..... UOC:UUU	1
* 17	PAOZZ	5340012569318	19207	12340214-1	.LOOP,STRAP FASTE L.H..... UOC:UUU	1
* 17	PAOZZ	5340012559919	34623	5595217	.LOOP,STRAP FASTE R.H..... UOC:UUU	1
* 18	PAOZZ	5310011520598	24617	271172	.NUT,SELF-LOCKING 1/4-20..... UOC:UUU	4
* 19	PAOFF	2510014505480	19207	12340231-10	DOOR,VEHICULAR CAMOUFLAGE,L.H. PART OF KIT P/N 57K3501..... UOC:UUU	1
* 19	PAOFF	2510014505479	19207	12340231-11	DOOR,VEHICULAR CAMOUFLAGE,R.H. PART OF KIT P/N 57K3501..... UOC:UUU	1
* 19	PAOFF	2510013306174	19207	12340231-3	DOOR,VEHICULAR TAN,L.H. PART OF KIT P/N 57K0155..... UOC:UUU	1
* 19	PAOFF	2510013306175	19207	12340231-4	DOOR,VEHICULAR TAN,R.H. PART OF KIT P/N 57K0155..... UOC:UUU	1
* 19	PAOFF	2510014076037	34623	12340231-5	DOOR,VEHICULAR WHITE,L.H PART OF KIT P/N 57K0161..... UOC:UUU	1
* 19	PAOFF	2510014076036	34623	12340231-6	DOOR,VEHICULAR WHITE,R.H. PART OF KIT P/N 57K0161.....	1

(1) ITEM NO	(2) SMR CODE	(3) NSN	(4) CAGEC	(5) PART NUMBER	(6) DESCRIPTION AND USABLE ON CODES(UOC)	(7) QTY
					UOC:UUU	
* 20	PAOZZ	5305000711327	96906	MS51960-70	.SCREW,MACHINE #10-32 X 1.25 PART OF KIT P/N 5705618 PART OF KIT P/N 5705619.....	1
					UOC:UUU	
* 21	PAOZZ	2540012001994	34623	5581320	.HANDLE,DOOR VEHIC R.H. PART OF KIT P/N 5705618.....	1
					UOC:UUU	
* 21	PAOZZ	2540012037721	34623	5581319	.HANDLE,DOOR VEHIC L.H. PART OF KIT 5705619.....	1
					UOC:UUU	
* 22	PAOZZ	5306013157212	19207	12356764-1	.SPRING,HELICAL TOR L.H. PART OF KIT P/N 5705619.....	1
					UOC:UUU	
* 22	PAOZZ	5306013157211	19207	12356764-2	.SPRING,HELICAL TOR R.H. PART OF KIT P/N 5705618.....	1
					UOC:UUU	
* 23	PAOZZ	5310012059056	34623	5581321	.WASHER,FLAT .622 PART OF KIT P/N 5705618 PART OF KIT P/N 5705619.....	1
					UOC:UUU	
* 24	PAOZZ	2540012001995	19207	12301365	.HANDLE,DOOR,VEHI L.H.,AND,R.H. PART OF KIT P/N 5705618 PART OF KIT P/N 5705619.....	1
					UOC:UUU	
* 25	PAOZZ	5340012059021	19207	12340193-1	.LEAF,BUTT HINGE L.H.....	2
					UOC:UUU	
* 25	PAOZZ	5340012059022	19207	12340193-2	.LEAF,BUTT HINGE R.H.....	2
					UOC:UUU	
* 26	PAOZZ	5305009881725	80205	NASM35206-281	.SCREW,MACHINE 1/4-20 X 3/4.....	1
					UOC:UUU	
* 27	PAOZZ	5305000711315	96906	MS51957-79	.SCREW,MACHINE 1/4-20 X 1/2.....	3
					UOC:UUU	
* 28	MOOZZ		41024	21022103-150IN.	.SEAL,NONMETALLIC SP MAKE FROM SEAL P/N 21022103,150 INCHES LONG.....	1
					UOC:UUU	
* 29	PAOZZ	5320010232529	81349	M24243/1A404	.RIVET,BLIND 1/8.....	18
					UOC:UUU	
* 30	PAOZZ	5340012547189	19207	12340201	.LOOP,STRAP FASTE PART OF KIT P/N 5705618.....	1
					UOC:UUU	
* 31	PAOZZ	5340011520598	24617	271172	.NUT,SELF-LOCKING 1/4-20.....	4
					UOC:UUU	
* 32	PAOZZ	5340012569318	19207	12340214-1	.LOOP,STRAP,FASTE L.H.....	1
					UOC:UUU	
* 32	PAOZZ	5340012559919	34623	5595217	.LOOP,STRAP FASTE R.H.....	1
					UOC:UUU	
* 33	PAFZZ	5325013571080	19207	12340212-3	.FASTENER,SLIDE INTERIOR.....	1
					UOC:UUU	

END OF FIGURE

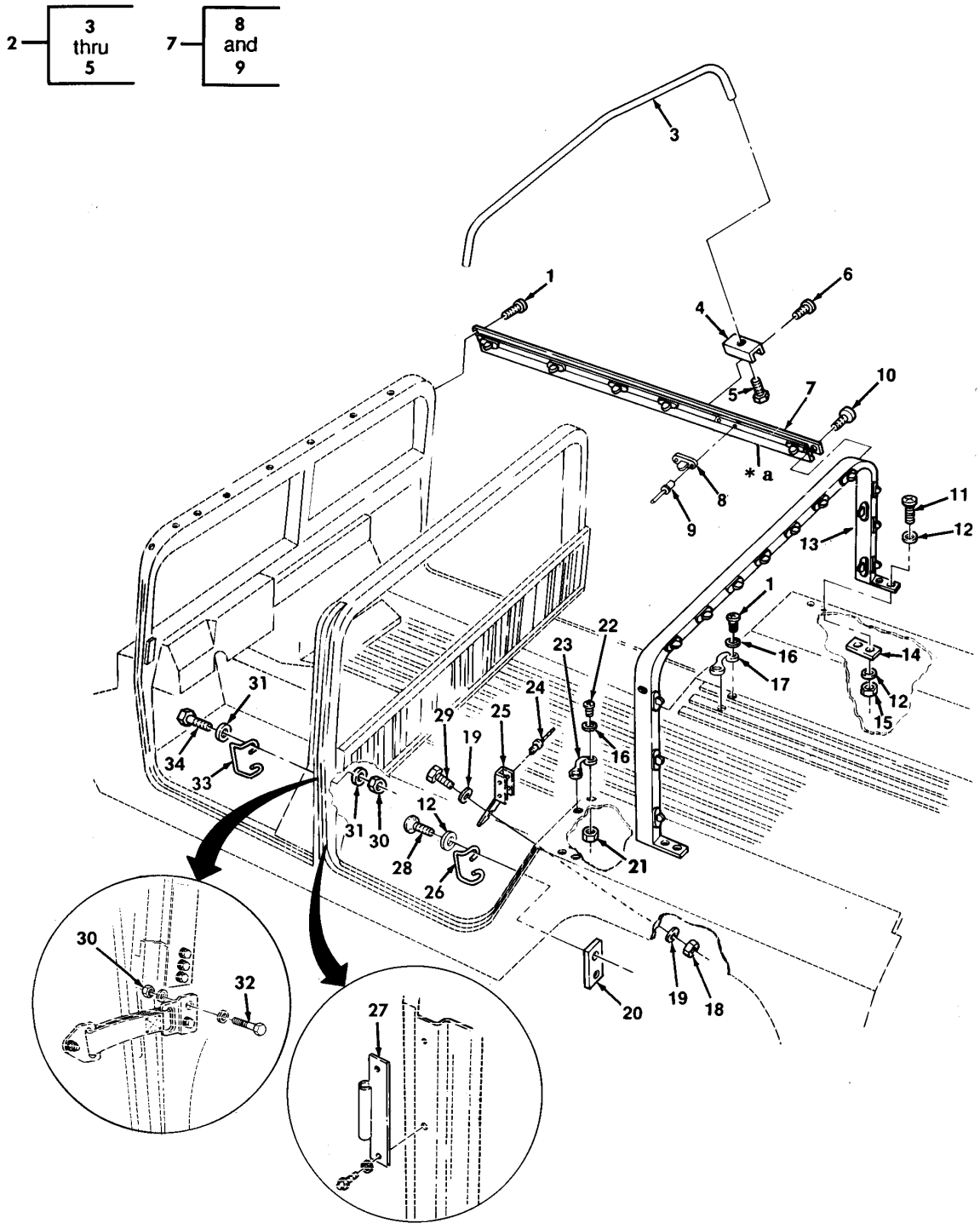

✱ **a** PART OF ITEM 7

Figure 227D. Four-Man Crew Soft Top Enclosure, Bows, and Mounting Components.

(1) ITEM NO	(2) SMR CODE	(3) NSN	(4) CAGEC	(5) PART NUMBER	(6) DESCRIPTION AND USABLE ON CODES(UOC)	(7) QTY
					GROUP 2201 CANVAS,RUBBER OR PLASTIC ITEMS	
					FIG. 227D FOUR MAN CREW SOFT TOP ENCLOSURE,BOWS,AND MOUNTING COMPONENTS	
* 1	PAOZZ	5305012106249	16941	PL25D02P12	SCREW,CAP,SOCKET HE #10-32 X 3/4... UOC:UUU	14
* 2	PFOZZ	2540011996759	19207	12340682	BOW,VEHICULAR TOP PART OF KIT P/N 57K0123 PART OF KIT P/N 57K0155 PART OF KIT P/N 57K0161 PART OF KIT P/N 57K3501..... UOC:UUU	2
* 3	PAOZZ	2540012064115	19207	12340713	.BOW,VEHICULAR TOP..... UOC:UUU	1
* 4	PFOZZ	5340012043862	19207	12340239	.STRAP,RETAINING..... UOC:UUU	2
* 5	PAOZZ	5305012038346	34623	5581439	.SCREW,CAP,SOCKET H 1/4-20 X 3/8... UOC:UUU	2
* 6	PAOZZ	5305000593659	80205	MS51958-63	SCREW,MACHINE #10-32 X .500 PART OF KIT P/N 57K0123 PART OF KIT P/N 57K0155 PART OF KIT P/N 57K0161 PART OF KIT P/N 57K3501..... UOC:UUU	8
* 7	PFOZZ	2590011961290	19207	12340222-1	HANDRAIL,VEHICULAR L.H. PART OF KIT KIT P/N 57K0123 PART OF KIT P/N 57K0155 PART OF KIT P/N 57K0161 PART OF KIT P/N 57K3501..... UOC:UUU	1
* 7	PFOZZ	2590011965314	19207	12340222-2	HANDRAIL,VEHICULAR R.H. PART OF KIT KIT P/N 57K0123 PART OF KIT P/N 57K0155 PART OF KIT P/N 57K0161 PART OF KIT P/N 57K3501..... UOC:UUU	1
* 8	PAOZZ	5325008235999	13940	XB78323-05001	.STUD,TURNBUTTON FA L.H.,AND R.H... UOC:UUU	3
* 9	PAOZZ	5320000835009	81349	M24243/1-A403	.RIVET,BLIND L.H.,AND R.H..... UOC:UUU	6
* 10	PAOZZ	5305011173396	80205	NAS1635-3LE12	SCREW,CAP,SOCKET H #10-32 X 3/4. PART OF KIT P/N 57K0123 PART OF KIT 57K0155 PART OF KIT P/N 57K0161 PART OF KIT P/N 57K3501..... UOC:UUU	2
* 11	PAOZZ	5305000680509	80204	B1821BH025C125N	SCREW,CAP,HEXAGON H 1/4-20 X 1.25.. UOC:UUU	4
* 12	PAOZZ	5310008094058	96906	MS27183-10	WASHER,FLAT 1/4..... UOC:UUU	8
* 13	PAOZZ	2540011961291	19207	12340679	BOW,VEHICULAR TOP PART OF KIT P/N 57K0123 PART OF KIT 57K0155 PART OF KIT P/N 57K0161 PART OF KIT P/N 57K3501..... UOC:UUU	1

(1) ITEM NO	(2) SMR CODE	(3) NSN	(4) CAGEC	(5) PART NUMBER	(6) DESCRIPTION AND USABLE ON CODES(UOC)	(7) QTY
* 14	PAOZZ	5340012559510	19207	12339009	PLATE,MENDING..... UOC:UUU	2
* 15	PAOZZ	5310014326727	24617	9419471	NUT,SELF-LOCKING 1/4-20 PART OF KIT KIT P/N 57K0155 PART OF KIT P/N 57K0161 PART OF KIT P/N 57K3501..... UOC:UUU	4
* 16	PAOZZ	5310012349416	96906	MS51412-2	WASHER,FLAT #10..... UOC:UUU	2
* 17	PAOZZ	2510011995748	19207	12338839-8	LOOP,FOOTMAN FLA PART OF KIT P/N P/N 57K0155 PART OF KIT P/N 57K0161 PART OF KIT P/N 57K3501..... UOC:UUU	2
* 18	PAOZZ	5310004838791	80205	MS17829-4F	NUT,SELF-LOCKING #10-32 PART OF KIT P/N 57K0155 PART OF KIT P/N 57K0161 PART OF KIT 57K3501..... UOC:UUU	2
* 19	PAOZZ	5310000814219	96906	MS27183-12	WASHER,FLAT PART OF KIT P/N 57K0155 PART OF KIT P/N 57K0161 PART OF KIT P/N 57K3501..... UOC:UUU	4
* 20	PAOZZ	5340011975477	19207	12339006	RETAINER,ASSEMBLED..... UOC:UUU	2
* 21	PAOZZ	5310001249265	72582	271169	NUT,PLAIN,ASSEMBLED..... UOC:UUU	4
* 22	PAOZZ	5305011850114	7X677	157166	SCREW #10-32 X .750 PART OF KIT P/N 57K0155 PART OF KIT P/N 57K0161 PART OF KIT P/N 57K3501..... UOC:UUU	4
* 23	PAOZZ	5340011978673	19207	12338839-4	HANDLE,BOW (PAINT TAN IF REQUIRED) PART OF KIT P/N 57K0155 PART OF KIT P/N 57K0161 PART OF KIT P/N57K3501.. UOC:UUU	2
* 24	PAOZZ	5320010341884	80205	NAS9304BNS-6-05	RIVET,BLIND PART OF KIT P/N 57K0155 PART OF KIT P/N 57K0161 PART OF KIT P/N 57K3501. UOC:UUU	8
* 25	PAOZZ	5340014309239	19207	12447124-1	BRACKET,MOUNTING R.H. PART OF KIT P/N 57K0155 PART OF KIT P/N 57K0161 PART OF KIT 57K3501..... UOC:UUU	1
* 25	PAOZZ	5340014309240	19207	12447123-1	BRACKET,MOUNTING L.H. PART OF KIT P/N 57K0155 PART OF KIT P/N 57K0161 PART OF KIT P/N 57K3501 UOC:UUU	1
* 26	PAOZZ	5310012087670	19207	12340182-1	STRIKER,LATCH DOOR L.H. PART OF KIT P/N 57K0155 PART OF KIT P/N 57K0161 PART OF KIT P/N 57K3501 UOC:UUU	1
* 27	PAOZZ	5342012032822	19207	12338650	MOUNT,RESILIENT PART OF KIT P/N P/N 57K0155 PART OF KIT P/N 57K0161 PART OF KIT 57K3501..... UOC:UUU	4
* 28	PAOZZ	5305009881725	80205	NASM35206-281	SCREW,MACHINE 1/4-20 X 3/4.....	4

(1) ITEM NO	(2) SMR CODE	(3) NSN	(4) CAGEC	(5) PART NUMBER	(6) DESCRIPTION AND USABLE ON CODES(UOC)	(7) QTY
					UOC:UUU	
* 29	PAOZZ	5306000514077	80204	B1821BH031F113N	BOLT,MACHINE 5/16-24 X 1.125..... PART OF KIT P/N 57K0155 PART OF KIT P/N 57K0161 PART OF KIT P/N 57K3501	8
					UOC:UUU	
* 30	PAOZZ	5310002416658	81349	M45913/3-5FG8C	NUT,SELF-LOCKING 5/16-24 PART OF KIT P/N 57K0155 PART OF KIT P/N 57K0161 PART PART OF KIT P/N 57K3501	12
					UOC:UUU	
* 31	PAOZZ	5310000814219	96906	MS27183-12	WASHER,FLAT 5/16.....	8
					UOC:UUU	
* 32	PAOZZ	5306001802748	88044	AN5H7	BOLT,MACHINE 5/16-24 X 1.00 PART OF KIT P/N 57K0155 PART OF KIT P/N 57K0161 PART PART OF KIT P/N 57K3501 OF KIT P/N 57K3501.....	4
* 33	PFOZZ	5340012070717	19207	12339187	BUCKLE.....	2
					UOC:UUU	
* 34	PAOZZ	5306000514077	80204	B1821BH031F113N	SCREW,CAP,HEXAGON H 5-16-24 X 1.125	4
					UOC:UUU	
*KIT	PDOZZ	2540013298075	19207	57K0155	PARTS KIT,SOFT TOP TAN.....	1
					UOC:UUU	
					BOLT,MACHINE (4) 227D-29	
					BOLT,MACHINE (4) 227D-32	
					BOW,VEHICULAR (2) 227D-2	
					BOW,VEHICULAR (1) 227D-13	
					BRACKET,MOUNTING (1) 227D-25	
					BRACKET,MOUNTING (1) 227D-25	
					CURTAIN,FITTED,VEHI(1) 227C-1	
					CURTAIN,VEHICULAR (1) 227C-2	
					DOOR ASSEMBLY (1) 227C-5	
					DOOR ASSEMBLY (1) 227C-5	
					DOOR ASSEMBLY (1) 227D-19	
					HANDLE,BOW (2) 227D-23	
					HANDRAIL,VEHICULAR (1) 227D-7	
					HANDRAIL,VEHICULAR (1) 227D-7	
					LOOP,FOOTMAN (2) 227D-17	
					MOUNT,RERSILIENT (4) 227D-27	
					NUT,SELF-LOCKING (2) 227D-15	
					NUT,SELF-LOCKING (2) 227D-18	
					NUT,SELF-LOCKING (12) 227D-30	
					RIVET,BLIND (8) 227D-24	
					SCREW (4) 227D-22	
					SCREW,CAP,SOCKET HE(2) 227D-10	
					SCREW,MACHINE (8) 227D-6	
					STRIKER,LATCH,DOOR (1) 227D-26	
					STRIKER,LATCH,DOOR (1) 227D-26	
					WASHER,FLAT (4) 227D-19	
*KIT	PDOZZ	2540014120929	19207	57K0161	COVER,FITTED VEHICL WHITE.....	1
					UOC:UUU	
					BOLT,MACHINE (4) 227D-29	
					BOLT,MACHINE (4) 227D-32	
					BOW,VEHICULAR (2) 227D-2	
					BOW,VEHICULAR (1) 227D-13	
					BRACKET,MOUNTING (1) 227D-25	
					BRACKET,MOUNTING (1) 227D-25	

(1) ITEM NO	(2) SMR CODE	(3) NSN	(4) CAGEC	(5) PART NUMBER	(6) DESCRIPTION AND USABLE ON CODES(UOC)	(7) QTY
					CURTAIN,FITTED,VEHI(1) 227C-1	
					CURTAIN,VEHICULAR (1) 227C-2	
					DOOR ASSEMBLY (1) 227C-5	
					DOOR ASSEMBLY (1) 227C-5	
					DOOR ASSEMBLY (1) 227D-19	
					HANDLE,BOW (2) 227D-23	
					HANDRAIL,VEHICULAR (1) 227D-7	
					HANDRAIL,VEHICULAR (1) 227D-7	
					LOOP,FOOTMAN (2) 227D-17	
					MOUNT,RERSILIENT (4) 227D-27	
					NUT,SELF-LOCKING (2) 227D-15	
					NUT,SELF-LOCKING (2) 227D-18	
					NUT,SELF-LOCKING (12) 227D-30	
					RIVET,BLIND (8) 227D-24	
					SCREW (4) 227D-22	
					SCREW,CAP,SOCKET HE(2) 227D-10	
					SCREW,MACHINE (8) 227D-6	
					STRIKER,LATCH,DOOR (1) 227D-26	
					STRIKER,LATCH,DOOR (1) 227D-26	
					WASHER,FLAT (4) 227D-19	
*KIT	PAOZZ	2540014348598	19207	57K3501	COVER,FITTED VEHICL CAMOUFLAGE	1
					UOC:UUU	
					BOLT,MACHINE (4) 227D-29	
					BOLT,MACHINE (4) 227D-32	
					BOW,VEHICULAR (2) 227D-2	
					BOW,VEHICULAR (1) 227D-13	
					BRACKET,MOUNTING (1) 227D-25	
					BRACKET,MOUNTING (1) 227D-25	
					CURTAIN,FITTED,VEHI(1) 227C-1	
					CURTAIN,VEHICULAR (1) 227C-2	
					DOOR ASSEMBLY (1) 227C-5	
					DOOR ASSEMBLY (1) 227C-5	
					DOOR ASSEMBLY (1) 227D-19	
					HANDLE,BOW (2) 227D-23	
					HANDRAIL,VEHICULAR (1) 227D-7	
					HANDRAIL,VEHICULAR (1) 227D-7	
					LOOP,FOOTMAN (2) 227D-17	
					MOUNT,RERSILIENT (4) 227D-27	
					NUT,SELF-LOCKING (2) 227D-15	
					NUT,SELF-LOCKING (2) 227D-18	
					NUT,SELF-LOCKING (12) 227D-30	
					RIVET,BLIND (8) 227D-24	
					SCREW (4) 227D-22	
					SCREW,CAP,SOCKET HE(2) 227D-10	
					SCREW,MACHINE (8) 227D-6	
					STRIKER,LATCH,DOOR (1) 227D-26	
					STRIKER,LATCH,DOOR (1) 227D-26	
					WASHER,FLAT (4) 227D-19	

END OF FIGURE

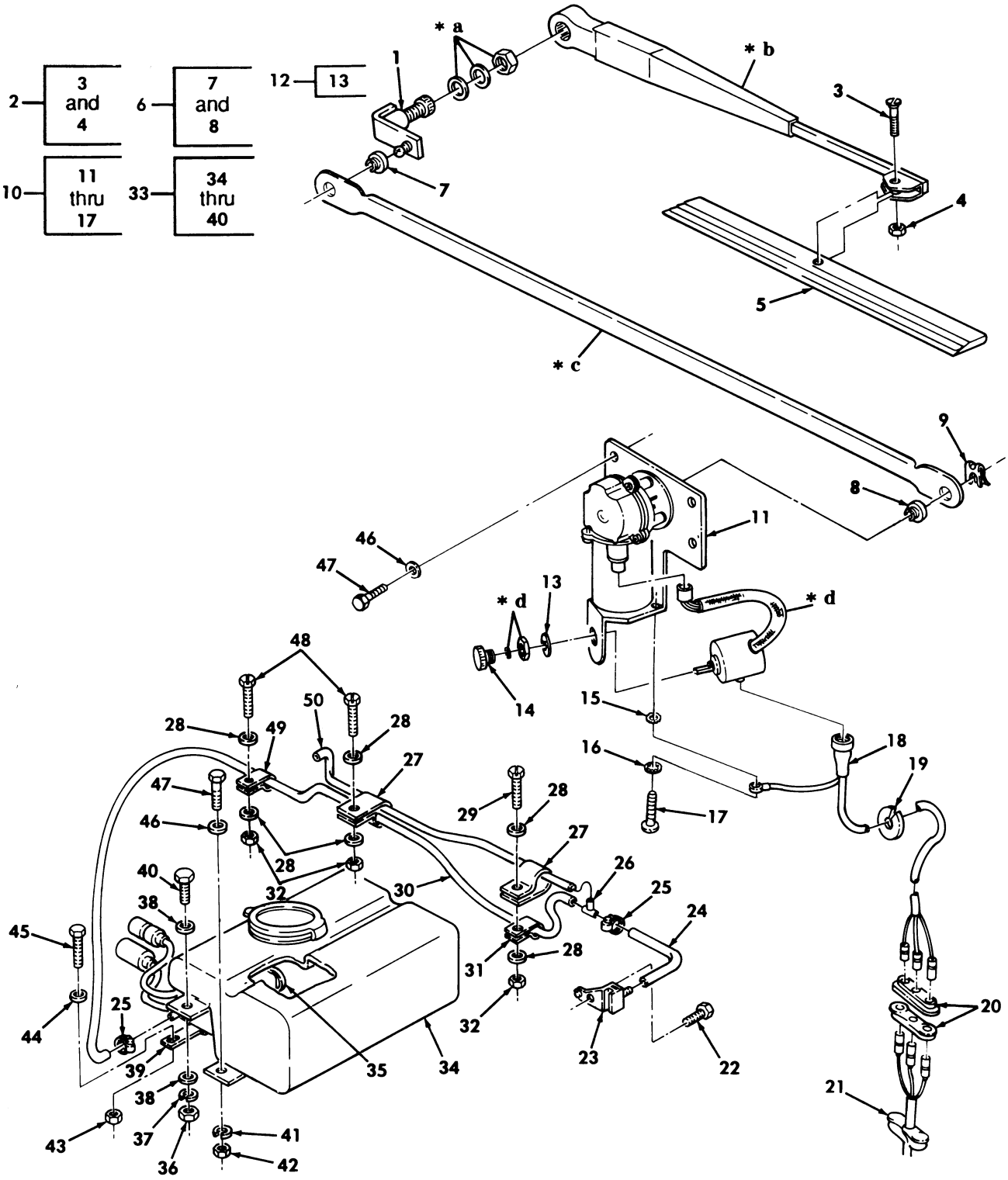

* a PART OF ITEM 1
* b PART OF ITEM 2
* c PART OF ITEM 6
* d PART OF ITEM 12

Figure 228. Windshield Wiper Motor, Wiper Assembly, and Related Parts.

(1) ITEM NO	(2) SMR CODE	(3) NSN	(4) CAGEC	(5) PART NUMBER	(6) DESCRIPTION AND USABLE ON CODES(UOC)	(7) QTY
					GROUP 2202 ACCESSORY ITEMS	
					FIG. 228 WINDSHIELD WIPER MOTOR, WIPER ASSEMBLY,AND RELATED PARTS	
1	PFOZZ	3040012106943	82484	GS-2176	LEVER,MANUAL CONTRO.....	2
2	PAOZZ	2540012124959	70412	13194	ARM,WINDSHIELD WIPE.....	2
3	PAOZZ	5305012297855	70412	62886	.SCREW,MACHINE 1/8 DIA.,1/2 INCH LONG.....	1
4	PAOZZ	5310012996460	72962	B79NM-50	.NUT,SELF-LOCKING,HE #5-40.....	1
5	PAOZZ	2540011997778	70412	51-11	BLADE,WINDSHIELD WI..... UOC:XAA	2
5	MOOZZ		19207	12339505-MO	BLADE,WINDSHIELD WI ORDER P/N 51-11 AND CUT TO FIT..... UOC:XBB	2
6	PAOZZ	2540012141568	19207	12338831	PIVOT SHAFT,WINDSHI.....	2
7	PAOZZ	3120014321474	82484	S-3076	.BUSHING,SLEEVE CENTER.....	1
8	PAOZZ	3120013881527	82484	S-3087	.BUSHING,SLEEVE OUTER.....	1
9	PAOZZ	5340012115593	82484	C-1703	CLIP,SPRING TENSION.....	1
10	PAOZZ	2540011860969	19207	12342501	MOTOR,WINDSHIELD WI 24 VOLTS.....	1
11	XAOZZ		19207	12342501-1	.WIPER MOTOR.....	1
12	PAOZZ	5930013479216	19207	12342681	.SWITCH,ROTARY.....	1
13	PAOZZ	5310006853228	96906	MS35333-43	..WASHER,LOCK 7/16.....	1
14	PAOZZ	5355013536934	19207	12342682	.KNOB.....	1
15	PAOZZ	5310008892528	96906	MS45904-68	.WASHER,LOCK 1/4.....	1
16	PAOZZ	5310005501130	96906	MS35333-40	.WASHER,LOCK 1/4.....	2
17	PAOZZ	5305002044850	80205	MS24629-73	.SCREW,TAPPING 1/4-20 X 1/2.....	1
18	PFOZZ	6150011858240	19207	12339347-1	CABLE ASSEMBLY,SPEC..... UOC:XAA	1
18	PFOZZ	6150012103596	19207	12339347-2	CABLE ASSEMBLY,SPEC..... UOC:XBB	1
19	PAOZZ	5325010887468	96906	MS35489-41	GROMMET,NONMETALLIC.....	1
20	PFOZZ	5999011839530	19207	12339327	CONTACT ASSEMBLY,EL.....	1
21	PAOZZ	5325012145007	34623	5579658	GROMMET,NONMETALLIC.....	1
22	PAOZZ	5305012554611	34623	5593284	SCREW,TAPPING #8-32 X 5/8..... UOC:XAA	2
22	PAOZZ	5305014732045	24617	164403	SCREW,TAPPING #8-32 X 5/8..... UOC:XBB	2
* 23	PFOZZ	2540011845503	24866	D12604	NOZZLE,WINDSHIELD W..... UOC:XAA	2
* 23	PAOZZ	2540014364236	6W728	4668243	NOZZLE,WINDSHIELD W..... UOC:XBB	2
* 24	MOOZZ		34623	SF5585258	HOSE,NONMETALLIC MAKE FROM HOSE,P/N 1125218C1,27 INCHES LONG.....	1
* 25	PAOZZ	4730000717890	81343	SAE J1508	CLAMP,HOSE.....	4
26	PAOZZ	4730010740060	60703	81087-5	TEE,HOSE.....	1
27	PAOZZ	5340009848541	96906	MS21333-106	CLAMP,LOOP.....	4
28	PAOZZ	5310012531618	96906	MS51412-18	WASHER,FLAT #10.....	14
29	PAOZZ	5305010062053	96906	MS51849-75	SCREW,MACHINE #10-24 X 5/8.....	6
* 30	MOOZZ		34623	5585245	HOSE,NONMETALLIC MAKE FROM HOSE,P/N 1125218C1 36 INCHES LONG.....	1
31	PAOZZ	5340008437825	96906	MS21333-68	CLAMP,LOOP.....	1
32	PAOZZ	5310009349758	96906	MS35649-202	NUT,PLAIN,HEXAGON #10-24.....	7

(1) ITEM NO	(2) SMR CODE	(3) NSN	(4) CAGEC	(5) PART NUMBER	(6) DESCRIPTION AND USABLE ON CODES(UOC)	(7) QTY
33	PAOOO	2540013859000	19207	12342885	PUMP,WINDSHIELD WAS.....	1
34	PAOZZ	2540013868790	0DPV2	203600	.RESERVOIR,WINDSHIEL.....	1
35	PAOZZ	5330013811810	19207	12342886	.RETAINER,PACKING.....	1
36	PAOZZ	5310009050762	96906	MS51967-3	.NUT,PLAIN,HEXAGON 1/4-20..... UOC:XAA	2
36	PAOZZ		6W728	4397050-025	.NUT,PLAIN,HEXAGON 1/4-20..... UOC:XBB	2
37	PAOZZ	5310005825965	96906	MS35338-44	.WASHER,LOCK 1/4.....	2
38	PAOZZ	5310012349416	96906	MS51412-2	.WASHER,FLAT 1/4.....	4
39	PAOZZ	2540013859031	0DPV2	203500	.PUMP,WINDSHIELD WAS.....	1
40	PAOZZ	5305014433238	72582	454065	.SCREW,CAP HEXAGPN H 1/4-20 X 3/4..	2
41	PAOZZ	5310000453296	96906	MS35338-43	WASHER,LOCK.....	1
42	PAOZZ	5310009050762	96906	MS51967-3	NUT,PLAIN,HEXAGON 1/4-20.....	1
43	PAOZZ	5310012499265	72582	271169	NUT,PLAIN,ASSEMBLED #10-32.....	2
44	PAOZZ	5310012349416	96906	MS51412-2	WASHER,FLAT.....	1
45	PAOZZ	5305005829501	82386	410-63	SCRRW,CAP,HEXAGON H #10-32 X 1/2...	1
46	PAOZZ	5310008094058	96906	MS27183-10	WASHER,FLAT 1/4.....	1
47	PAOZZ	5305000680508	80204	B1821BH025C075N	SCREW,CAP HEXAGON H 1/4-20 X 3/4...	1
48	PAOZZ	5305010062053	96906	MS51849-75	SCREW,MACHINE #10-24 X 1.00.....	6
49	PAOZZ	5340008091492	96906	MS231333-100	CLAMP,LOOP.....	3
* 50	MOOZZ		34623	SF5585243	HOSE,NONMETALLIC MAKE FROM HOSE P/N 1125218C1,16 INCHES LONG.....	1

END OF FIGURE

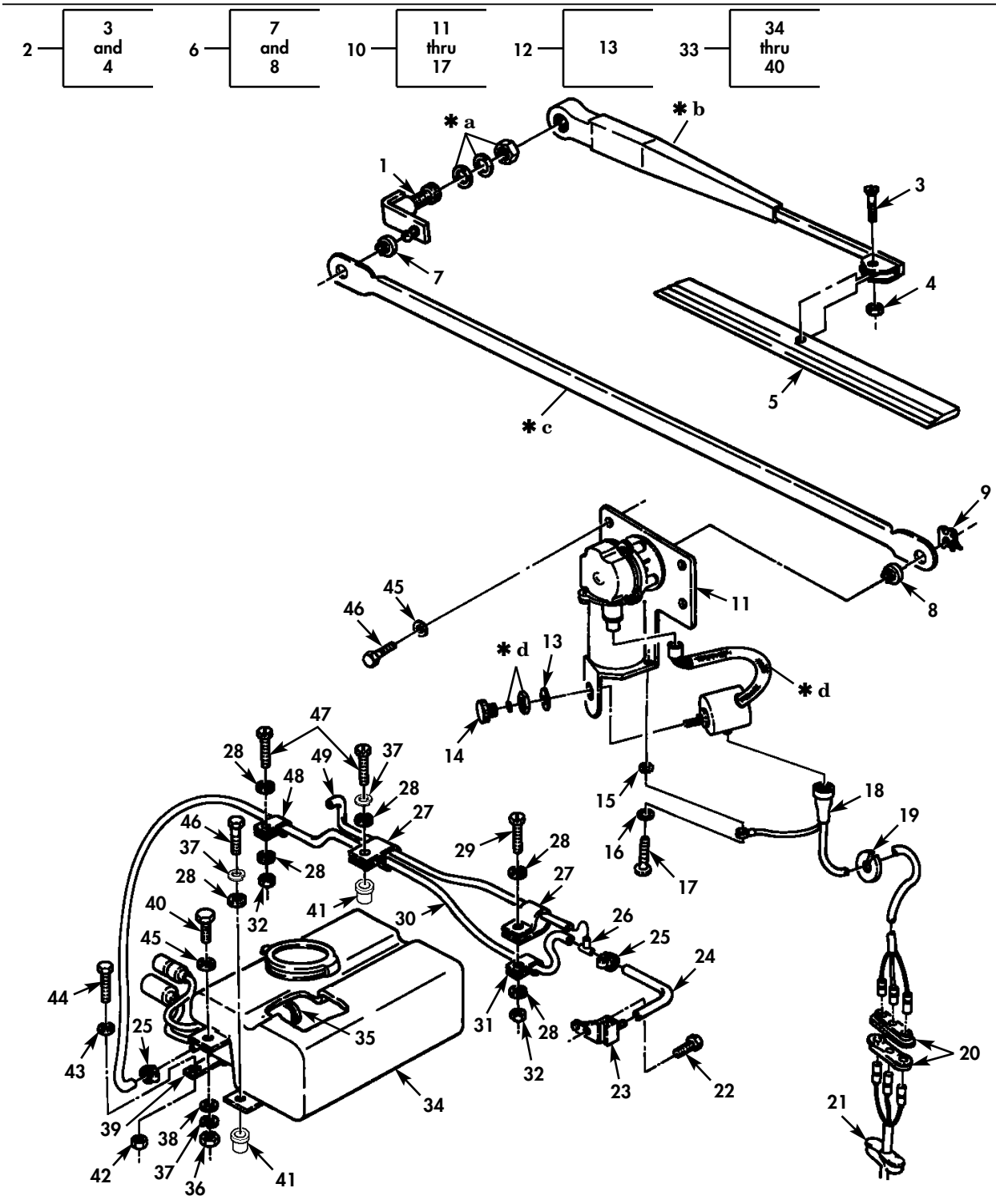

✱**a** PART OF ITEM 1
✱**b** PART OF ITEM 2
✱**c** PART OF ITEM 6
✱**d** PART OF ITEM 12

Figure 228A. Windshield Wiper Assembly.

(1) ITEM NO	(2) SMR CODE	(3) NSN	(4) CAGEC	(5) PART NUMBER	(6) DESCRIPTION AND USABLE ON CODES(UOC)	(7) QTY
					GROUP 2202 ACCESSORY ITEMS	
					FIG. 228A WINDSHIELD WIPER ASSEMBLY	
* 1	PFOZZ	2540014220253	19207	12340660	PIVOT ASSEMBLY,WIND..... UOC:TTA,TTT,TT1,UUA,UUU,UU1,UU2	2
* 2	PAOZZ	2540012124959	70412	12339504	ARM,WINDSHIELD WIPE..... UOC:TTA,TTT,TT1,UUA,UUU,UU1,UU2	2
* 3	PAOZZ	5305012297855	70412	62886	.SCREW,MACHINE..... UOC:TTA,TTT,TT1,UUA,UUU,UU1,UU2	1
* 4	PAOZZ	5310012996460	72962	B79NM-50	.NUT,SELF-LOCKING #5-40..... UOC:TTA,TTT,TT1,UUA,UUU,UU1,UU2	1
* 5	PAOZZ	2540011997778	70412	51-11	BLADE,WINDSHIELD WIPE..... UOC:TTA,TTT,TT1,UUA,UUU,UU1,UU2	2
* 5	MOOZZ		19207	12339505	BLADE,WINDSHIELD WIPE MAKE FROM BLADE P/N 51-11 CUT TO FIT..... UOC:TTA,TTT,TT1,UUA,UUU,UU1,UU2	2
* 6	PAOZZ	2540012141568	19207	12338831	PIVOT SHAFT,WINDSHIEL..... UOC:TTA,TTT,TT1,UUA,UUU,UU1,UU2	2
* 7	PAOZZ	3120014321474	82484	S-3076	.BUSHING,SLEEVE CENTER..... UOC:TTA,TTT,TT1,UUA,UUU,UU1,UU2	1
* 8	PAOZZ	3120013881527	82484	S-3087	.BUSHING,SLEEVE OUTER..... UOC:TTA,TTT,TT1,UUA,UUU,UU1,UU2	1
* 9	PAOZZ	5340012115593	82484	C-1703	CLIP,SPRING TENSION..... UOC:TTA,TTT,TT1,UUA,UUU,UU1,UU2	1
* 10	PAOZZ	2540011860969	19207	12342501	MOTOR,WINDSHIELD WIPE 24 VOLT..... UOC:TTA,TTT,TT1,UUA,UUU,UU1,UU2	1
* 11	XAOZZ		19207	12342501-1	.WIPER MOTOR..... UOC:TTA,TTT,TT1,UUA,UUU,UU1,UU2	1
* 12	PAOZZ	5930013479216	19207	12342681	.SWITCH,ROTARY..... UOC:TTA,TTT,TT1,UUA,UUU,UU1,UU2	1
* 13	PAOZZ	5310006853228	96906	MS35333-43	..WASHER,LOCK 7/16..... UOC:TTA,TTT,TT1,UUA,UUU,UU1,UU2	1
* 14	PAOZZ	5355013536934	19207	12342682	.KNOB..... UOC:TTA,TTT,TT1,UUA,UUU,UU1,UU2	1
* 15	PAOZZ	5310008892528	96906	MS45904-68	.WASHER,LOCK 1/4..... UOC:TTA,TTT,TT1,UUA,UUU,UU1,UU2	1
* 16	PAOZZ	5310005501130	80205	MS35333-40	.WASHER,LOCK 1/4..... UOC:TTA,TTT,TT1,UUA,UUU,UU1,UU2	2
* 17	PAOZZ	5305002044850	80205	MS24629-73	.SCREW,TAPPING 1/4-20 X 1/2..... UOC:TTA,TTT,TT1,UUA,UUU,UU1,UU2	1
* 18	PAOZZ	6150011858240	19207	12339347-1	CABLE ASSEMBLY,SPEC..... UOC:TTA,TTT,TT1,UUA,UUU,UU1,UU2	1
* 18	PAOZZ	6150012103596	19207	12339347-2	CABLE ASSEMBLY,SPEC..... UOC:TTA,TTT,TT1,UUA,UUU,UU1,UU2	1
* 19	PAOZZ	5325010887468	96906	MS35489-41	GROMMET,NONMETALLIC..... UOC:TTA,TTT,TT1,UUA,UUU,UU1,UU2	1
* 20	PAOZZ	5999011839530	19207	12339327	CONTACT ASSEMBLY,EL..... UOC:TTA,TTT,TT1,UUA,UUU,UU1,UU2	1
* 21	PAOZZ	5325012145007	34623	5579658	GROMMET,NONMETALLIC..... UOC:TTA,TTT,TT1,UUA,UUU,UU1,UU2	1
* 22	PAOZZ	5305014732045	24617	164403	SCREW,TAPPING #8-32 X 5/8..... UOC:TTA,TTT,TT1,UUA,UUU,UU1,UU2	2

(1) ITEM NO	(2) SMR CODE	(3) NSN	(4) CAGEC	(5) PART NUMBER	(6) DESCRIPTION AND USABLE ON CODES(UOC)	(7) QTY
* 23	PAOZZ	2540011845503	24866	D12604	NOZZLE,WINDSHIELD W..... UOC:TTA,TTT,TT1,UUA,UUU,UU1,UU2	2
* 24	MOOZZ		34623	12338809-2	HOSE,NONMETALLIC MAKE FROM P/N 846-50,27 INCHES LONG..... UOC:TTA,TTT,TT1,UUA,UUU,UU1,UU2	1
* 25	PAOZZ	4730002028967	03776	WW-C-440B	CLAMP,HOSE..... UOC:TTA,TTT,TT1,UUA,UUU,UU1,UU2	4
* 26	PAOZZ		96906	12340056	TEE,HOSE..... UOC:TTA,TTT,TT1,UUA,UUU,UU1,UU2	1
* 27	PAOZZ	5340002827517	80205	MS21333-42	CLAMP,LOOP..... UOC:TTA,TTT,TT1,UUA,UUU,UU1,UU2	4
* 28	PAOZZ	5310004022778	24617	9416128	WASHER,FLAT #10..... UOC:TTA,TTT,TT1,UUA,UUU,UU1,UU2	14
* 29	PAOZZ	5305002400194	96906	MS51849-76	SCREW,MACHINE #10-24 X 5/8..... UOC:TTA,TTT,TT1,UUA,UUU,UU1,UU2	6
* 30	PAOZZ		19207	12338809-3	HOSE,NONMETALLIC..... UOC:TTA,TTT,TT1,UUA,UUU,UU1,UU2	1
* 31	PAOZZ	5340008437825	80205	MS21333-68	CLAMP,LOOP..... UOC:TTA,TTT,TT1,UUA,UUU,UU1,UU2	1
* 32	PAOZZ	5310009349758	80205	MS35649-202	NUT,PLAIN,HEXAGON #10-24..... UOC:TTA,TTT,TT1,UUA,UUU,UU1,UU2	7
* 33	PAOOO	2540013859000	19207	12342885	PUMP,WINDSHIELD WASHER..... UOC:TTA,TTT,TT1,UUA,UUU,UU1,UU2	1
* 34	PAOZZ	2540013868790	19207	12342888	.RESERVOIR,WINDSHIELD..... UOC:TTA,TTT,TT1,UUA,UUU,UU1,UU2	1
* 35	PAOZZ	5330013811810	19207	12342886	.RETAINER,PACKING..... UOC:TTA,TTT,TT1,UUA,UUU,UU1,UU2	1
* 36	PAOZZ	5310009050762	96906	MS51967-3	.NUT,PLAIN,HEXAGON 1/4-20..... UOC:TTA,TTT,TT1,UUA,UUU,UU1,UU2	2
* 37	PAOZZ	5310005825965	80205	MS35338-44	.WASHER,LOCK 1/4..... UOC:TTA,TTT,TT1,UUA,UUU,UU1,UU2	2
* 38	PAOZZ	5310012349416	96906	MS51412-2	.WASHER,FLAT #10..... UOC:TTA,TTT,TT1,UUA,UUU,UU1,UU2	4
* 39	PAOZZ	2540013859031	ODPV2	203500	.PUMP,WINDSHIELD WASHER..... UOC:TTA,TTT,TT1,UUA,UUU,UU1,UU2	1
* 40	PAOZZ	5305011432328	72582	454065	.SCREW,CAP,HEXAGON H 1/4-20 X 3/4.. UOC:TTA,TTT,TT1,UUA,UUU,UU1,UU2	2
* 41	PAOZZ	5310014113422	24617	12446871-2	NUT,PLAIN,BLIND RIVET..... UOC:TTA,TTT,TT1,UUA,UUU,UU1,UU2	2
* 42	PAOZZ	5310011249265	72582	271169	NUT,PLAIN,ASSEMBLED #10-32..... UOC:TTA,TTT,TT1,UUA,UUU,UU1,UU2	2
* 43	PAOZZ	5310012349416	96906	MS51412-2	WASHER,FLAT #10..... UOC:TTA,TTT,TT1,UUA,UUU,UU1,UU2	1
* 44	PAOZZ	5305005829501	80045	4201-87-23	SCREW,CAP,HEXAGON H 1/4-20 X 1/2... UOC:TTA,TTT,TT1,UUA,UUU,UU1,UU2	1
* 45	PAOZZ	5310008094058	96906	MS27183-10	WASHER,FLAT 1/4..... UOC:TTA,TTT,TT1,UUA,UUU,UU1,UU2	1
* 46	PAOZZ	5305000680508	80205	B1821BH025C075N	SCREW,CAP,HEXAGON H 1/4-20 X 3/4... UOC:TTA,TTT,TT1,UUA,UUU,UU1,UU2	2
* 47	PAOZZ	5305002406668	96906	MS51849-78	SCREW,MACHINE..... UOC:TTA,TTT,TT1,UUA,UUU,UU1,UU2	2
* 48	PAOZZ	5340008091492	96906	MS21333-100	CLAMP,LOOP..... UOC:TTA,TTT,TT1,UUA,UUU,UU1,UU2	1

(1) ITEM NO	(2) SMR CODE	(3) NSN	(4) CAGEC	(5) PART NUMBER	(6) DESCRIPTION AND USABLE ON CODES(UOC)	(7) QTY
* 49	MOOZZ		34623	12338809-2	HOSE,NONMETALLIC MAKE FROM P/N 846-50 16,INCHES LONG..... UOC:TTA,TTT,TT1,UUA,UUU,UU1,UU2	1

END OF FIGURE

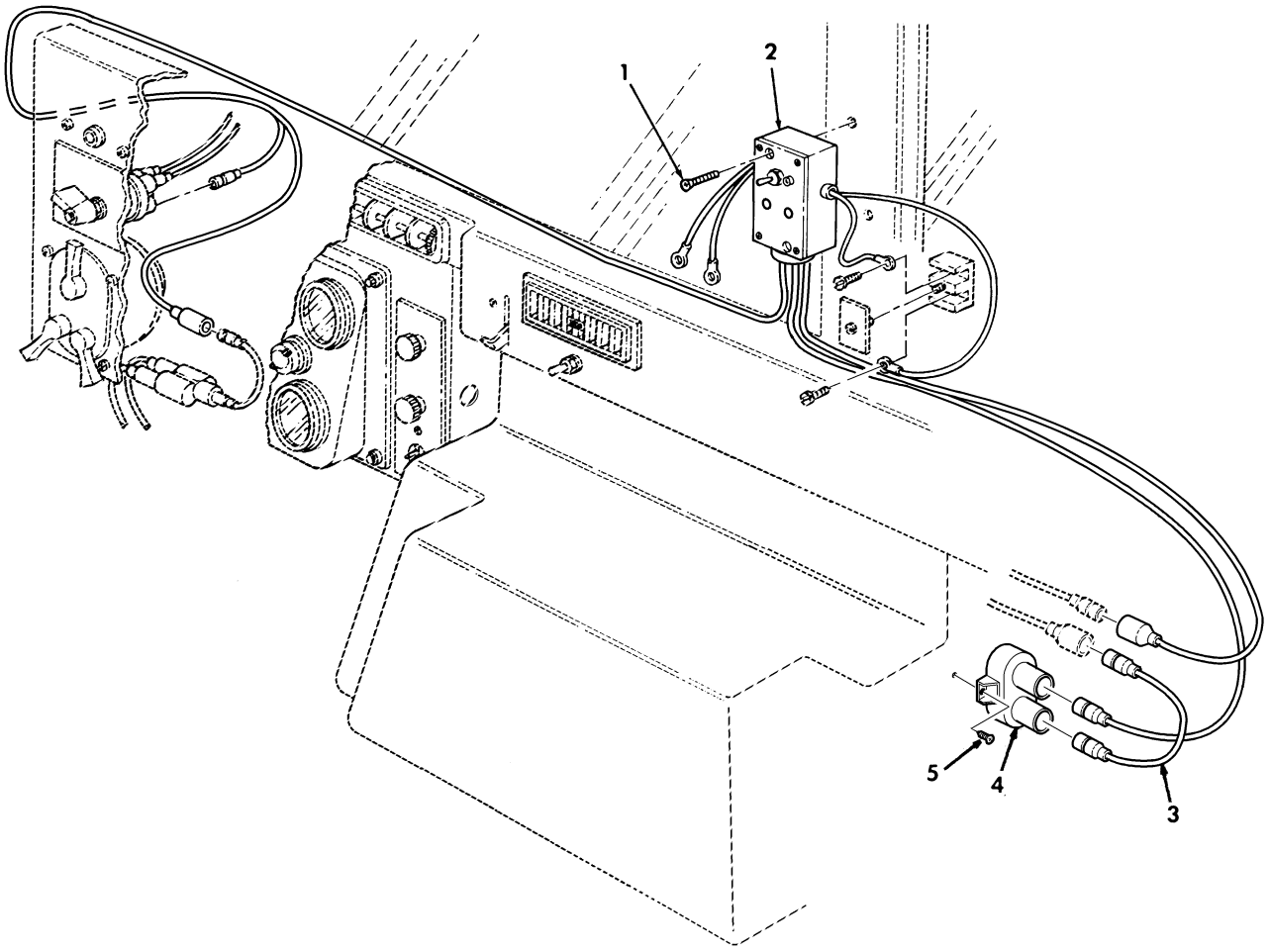

Figure 229. Windshield De-Icer and Related Parts.

(1) ITEM NO	(2) SMR CODE	(3) NSN	(4) CAGEC	(5) PART NUMBER	(6) DESCRIPTION AND USABLE ON CODES(UOC)	(7) QTY
					GROUP 2202 ACCESSORY ITEMS	
					FIG. 229 WINDSHIELD DE-ICER AND RELATED PARTS	
1	PAOZZ	5305014652821	6W728	4397012-056	SCREW,MACHINE #8-32 X 3/4..... UOC:XBB	2
* 2	PFOZZ		6W728	1000074	SWITCH,TOGGLE..... UOC:XBB	1
* 3	PAOZZ		6W728	1000074-022	LEAD,ELECTRICAL..... UOC:XBB	1
* 4	PAOZZ	5925014302318	58536	AA55571/01-001	CIRCUIT BREAKER..... UOC:XBB	1
* 5	PAOZZ	5305009846221	96906	MS35206-234	SCREW,MACHINE..... UOC:XBB	2

END OF FIGURE

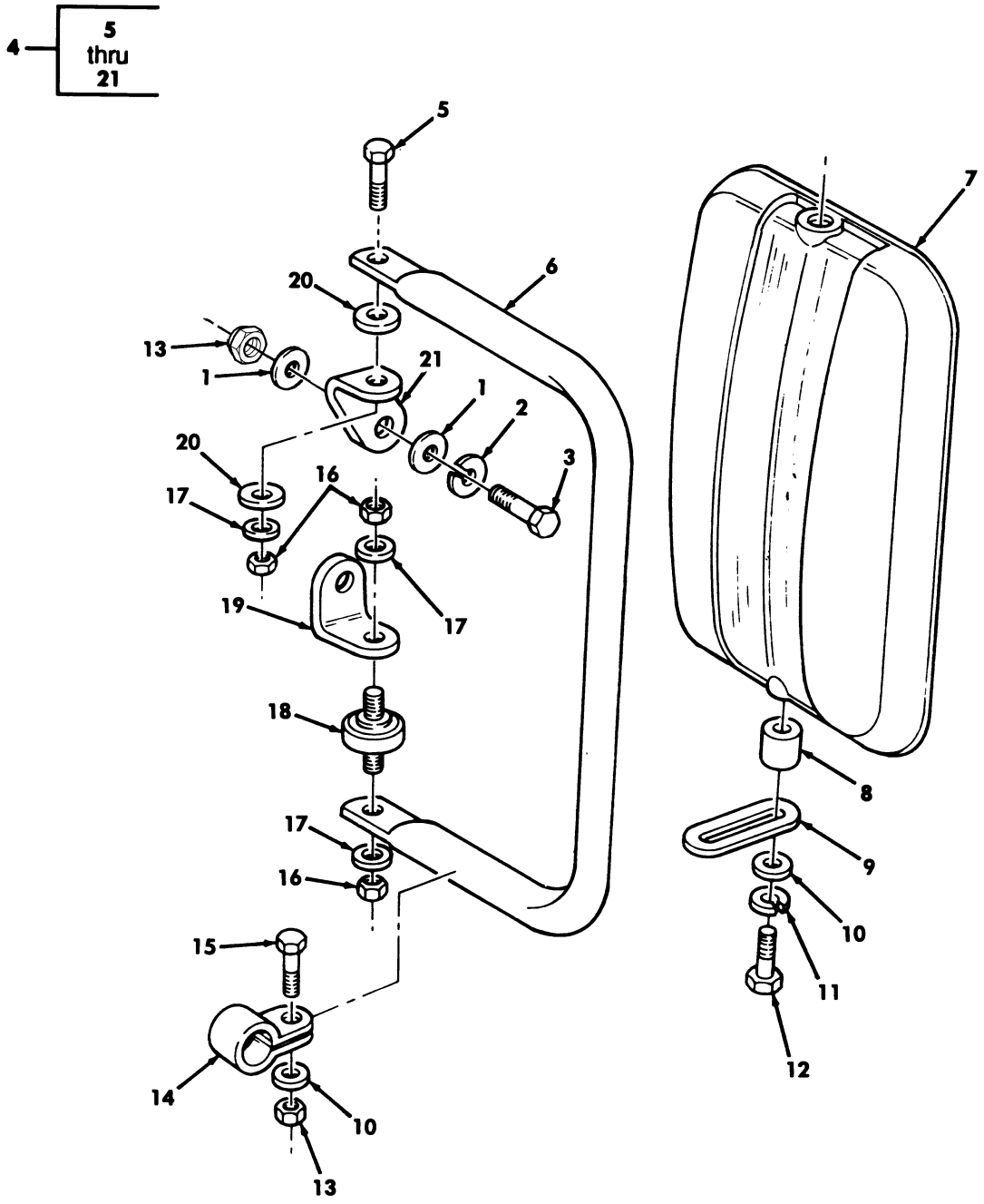

Figure 230. Split Rearview Mirror and Mounting Hardware.

(1) ITEM NO	(2) SMR CODE	(3) NSN	(4) CAGEC	(5) PART NUMBER	(6) DESCRIPTION AND USABLE ON CODES(UOC)	(7) QTY
					GROUP 2202 ACCESSORY ITEMS	
					FIG. 230 SPLIT REARVIEW MIRROR AND MOUNTING HARDWARE	
* 1	PAOZZ	5310000814219	96906	MS27183-12	WASHER,FLAT 5/16..... UOC:UUU,XAA,XBB	4
* 2	PAOZZ	5310004079566	96906	MS35338-45	WASHER,LOCK 5/16..... UOC:UUU,XAA,XBB	4
* 3	PAOZZ	5306002264827	80204	B1821BH031C100N	BOLT,MACHINE 5/16-18 X 1.00..... UOC:UUU,XAA,XBB	4
* 4	PAOOO	2540014112130	19207	12343061	MIRROR ASSEMBLY,REA L.H.,GREEN..... UOC:UUU,XAA,XBB	1
* 4	PAOOO	2540013149379	34623	12342130	MIRROR ASSEMBLY,REA R.H.,GREEN..... UOC:UUU,XAA,XBB	1
* 4	PAOOO	2540014873673	70082	1411	MIRROR ASSEMBLY,REA L.H.,TAN..... UOC:UUU,XAA,XBB	1
* 4	PAOOO	2540014379932	70082	1302	MIRROR ASSEMBLY,REA R.H.,TAN..... UOC:UUU,XAA,XBB	1
* 5	PAOZZ	5305005432419	80204	B1821BH038C113N	.SCREW,CAP,HEXAGON H 3/8-16 X 1-1/8 UOC:UUU,XAA,XBB	2
* 6	PAOZZ	2540013141188	70082	6388	.ARM,REARVIEW MIRROR..... UOC:UUU,XAA,XBB	1
* 7	PAOZZ	2540014108794	70082	1351	.MIRROR HEAD,VEHICUL L.H. GREEN.... UOC:UUU,XAA,XBB	1
* 7	PAOZZ	2540013141189	70082	0462	.MIRROR HEAD,VEHICUL R.H..GREEN.... UOC:UUU,XAA,XBB	1
* 7	PAOZZ	2540014873616	70082	0462A	.MIRROR ASSEMBLY,REAR R.H. TAN..... UOC:UUU,XAA,XBB	1
* 7	PAOZZ	2540014873626	70082	1305A	.MIRROR ASSEMBLY,REAR L.H. TAN..... UOC:UUU,XAA,XBB	1
* 8	PAOZZ	5365013153595	70082	7243	.SPACER,SLEEVE..... UOC:UUU,XAA,XBB	4
* 9	PAOZZ	2540013142101	70082	6390	.ARM,REARVIEW MIRROR..... UOC:UUU,XAA,XBB	4
* 10	PAOZZ	5310000814219	96906	MS27183-12	.WASHER,FLAT 5/16..... UOC:UUU,XAA,XBB	8
* 11	PAOZZ	5310004079566	96906	MS35338-45	.WASHER,LOCK 5/16..... UOC:UUU,XAA,XBB	2
* 12	PAOZZ	5306002258503	62915	SK-11002-6	.BOLT,MACHINE 5/16-18 X 1-3/4..... UOC:UUU,XAA,XBB	4
* 13	PAOZZ	5310008140673	96906	MS51943-33	.NUT,SELF-LOCKING,HE 5/16-18..... UOC:UUU,XAA,XBB	4
* 14	PAOZZ	5340013153611	70082	6389	.CLAMP,LOOP..... UOC:UUU,XAA,XBB	4
* 15	PAOZZ	5306002258499	96906	MS90725-34	.BOLT,MACHINE 5/16-18 X 1.00..... UOC:UUU,XAA,XBB	4
* 16	PAOZZ	5310011269404	24617	9422277	.NUT,SELF-LOCKING,HE 3/8-16..... UOC:UUU,XAA,XBB	6
* 17	PAOZZ	5310000806004	96906	MS27183-14	.WASHER,FLAT 3/8..... UOC:UUU,XAA,XBB	6
* 18	PAOZZ	5307013162986	70082	6185	.STUD,LOCKED IN..... UOC:UUU,XAA,XBB	2

(1) ITEM NO	(2) SMR CODE	(3) NSN	(4) CAGEC	(5) PART NUMBER	(6) DESCRIPTION AND USABLE ON CODES(UOC)	(7) QTY
* 19	PAOZZ	5340014086460	19207	12343063	.BRACKET,ANGLE LOWER,L.H..... UOC:UUU,XAA	1
* 19	PAOZZ	5340013162959	19207	12342136	.BRACKET,ANGLE LOWER,R.H..... UOC:UUU,XAA	1
* 19	PAOZZ	2540014184070	6W728	4668217	.ARM,REARVIEW MIRROR LOWER,L.H..... UOC:XBB	1
* 19	PAOZZ	2540014170027	6W728	4668216	.ARM,REARVIEW MIRROR LOWER,R.H..... UOC:XBB	1
* 20	PAOZZ	5310013133562	96906	MS51859-20	.WASHER,FLAT 3/8.....	4
* 21	PAOZZ	5340014086456	19207	12343062	.BRACKET,ANGLE UPPER,L.H..... UOC:UUU,XAA	1
* 21	PAOZZ	5340013161507	19207	12342134	.BRACKET,ANGLE UPPER,R.H..... UOC:UUU,XAA	1
* 21	PAOZZ	2540014180027	6W728	4668216	.ARM,REARVIEW MIRROR UPPER,L.H..... UOC:XBB	1
* 21	PAOZZ	2540014184070	6W728	4668217	.ARM,REARVIEW MIRROR UPPER,L.H..... UOC:XBB	1

END OF FIGURE

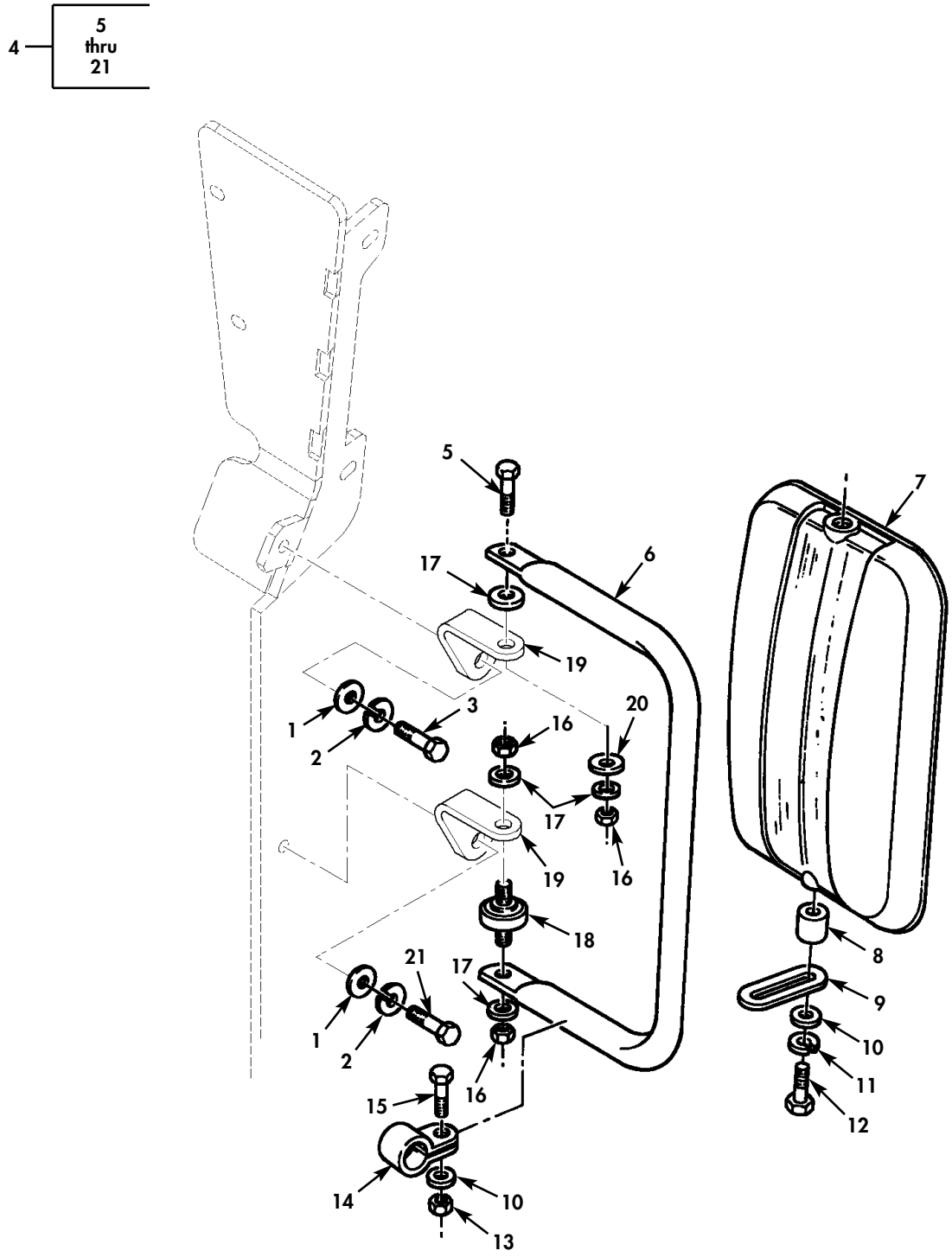

Figure 230A. Split Rearview Mirrors and Mounting Hardware.

(1) ITEM NO	(2) SMR CODE	(3) NSN	(4) CAGEC	(5) PART NUMBER	(6) DESCRIPTION AND USABLE ON CODES(UOC)	(7) QTY
					GROUP 2202 ACCESSSORY ITEMS	
					FIG. 230A SPLIT REARVIEW MIRRORS AND MOUNTING HARDWARE	
* 1	PAOZZ	5310000814219	96906	MS27183-12	WASHER,FLAT 5/16 ..... UOC:TTT	4
* 2	PAOZZ	5310004079566	80205	MS35338-45	WASHER,LOCK 5/16..... UOC:TTT	4
* 3	PAOZZ	5306002264827	80204	B1821BH031C100N	SCREW,CAP,HEXAGON H 5/16-18 X 1.00. UOC:TTT	2
* 4	PAOOO	2540014112130	19207	12343061	MIRROR ASSEMBLY,REA L.H.,GREEN..... UOC:TTT	1
* 4	PAOOO	2540013149379	34623	12342130	MIRROR ASSEMBLY,REA R.H.,GREEN..... UOC:TTT	1
* 4	PAOOO	2540014873673	70082	1411	MIRROR ASSEMBLY,REA L.H.,TAN..... UOC:TTT	1
* 4	PAOOO	2540014379932	70082	1302	MIRROR ASSEMBLY,REA R.H.,TAN..... UOC:TTT	1
* 5	PAOZZ	5305005432419	80204	B1821BH038C113N	.SCREW,CAP,HEXAGON H 3/8-16 X 1.125 UOC:TTT	2
* 6	PAOZZ	2540013141188	70082	6388	.ARM,REARVIEW MIRROR..... UOC:TTT	1
* 7	PAOZZ	2540014108794	70082	1351	.MIRROR HEAD,VEHICUL L.H.,GREEN.... UOC:TTT	1
* 7	PAOZZ	2540013141189	70082	0462	.MIRROR HEAD,VEHICUL R.H.,GREEN.... UOC:TTT	1
* 7	PAOZZ	2540014873626	70082	1305A	.MIRROR HEAD,VEHICUL L.H.,TAN..... UOC:TTT	1
* 7	PAOZZ	2540014873616	70082	0462A	.MIRROR HEAD,VEHICUL R.H.,TAN..... UOC:TTT	1
* 8	PAOZZ	5365013153595	70082	7243	.SPACER,SLEEVE..... UOC:TTT	4
* 9	PAOZZ	2540013142101	19207	12342138	.ARM,REARVIEW MIRROR..... UOC:TTT	4
* 10	PAOZZ	5310000814219	96906	MS27183-12	.WASHER,FLAT 5/16..... UOC:TTT	8
* 11	PAOZZ	5310004079566	80205	MS35338-45	.WASHER,LOCK 5/16..... UOC:TTT	2
* 12	PAOZZ	5306002258503	80205	MS90725-39	.BOLT,MACHINE 5/16-18 X 1.75..... UOC:TTT	4
* 13	PAOZZ	5310008140673	96906	MS51943-33	.NUT,SELF-LOCKING,HE 5/16-18..... UOC:TTT	4
* 14	PAOZZ	5340013153611	70082	6389	.CLAMP,LOOP..... UOC:TTT	4
* 15	PAOZZ	5306002258499	80205	MS90725-34	.BOLT,MACHINE 5/16-18 X 1.00..... UOC:TTT	4
* 16	PAOZZ	5310011269404	24617	9422277	.NUT,SELF-LOCKING,HE 3/8-16..... UOC:TTT	6
* 17	PAOZZ	5310000806004	96906	MS27183-14	.WASHER,FLAT 3/8..... UOC:TTT	6
* 18	PAOZZ	5307013162986	70082	6185	.STUD,LOCKED IN..... UOC:TTT	2

(1) ITEM NO	(2) SMR CODE	(3) NSN	(4) CAGEC	(5) PART NUMBER	(6) DESCRIPTION AND USABLE ON CODES(UOC)	(7) QTY
* 19	PAOZZ		34623	6015562	.BRACKET,ANGLE L.H..... UOC:TTT	2
* 19	PAOZZ		34623	6015563	.BRACKET,ANGLE R.H..... UOC:TTT	2
* 20	PAOZZ	5310013133562	96906	MS51859-20	.WASHER,FLAT 3/8..... UOC:TTT	4
* 21	PAOZZ	5305002264831	80204	B1821BH031C150N	.SCREW,CAP,HEXAGON H 5/16-18 X 1.50 UOC:TTT	2

END OF FIGURE

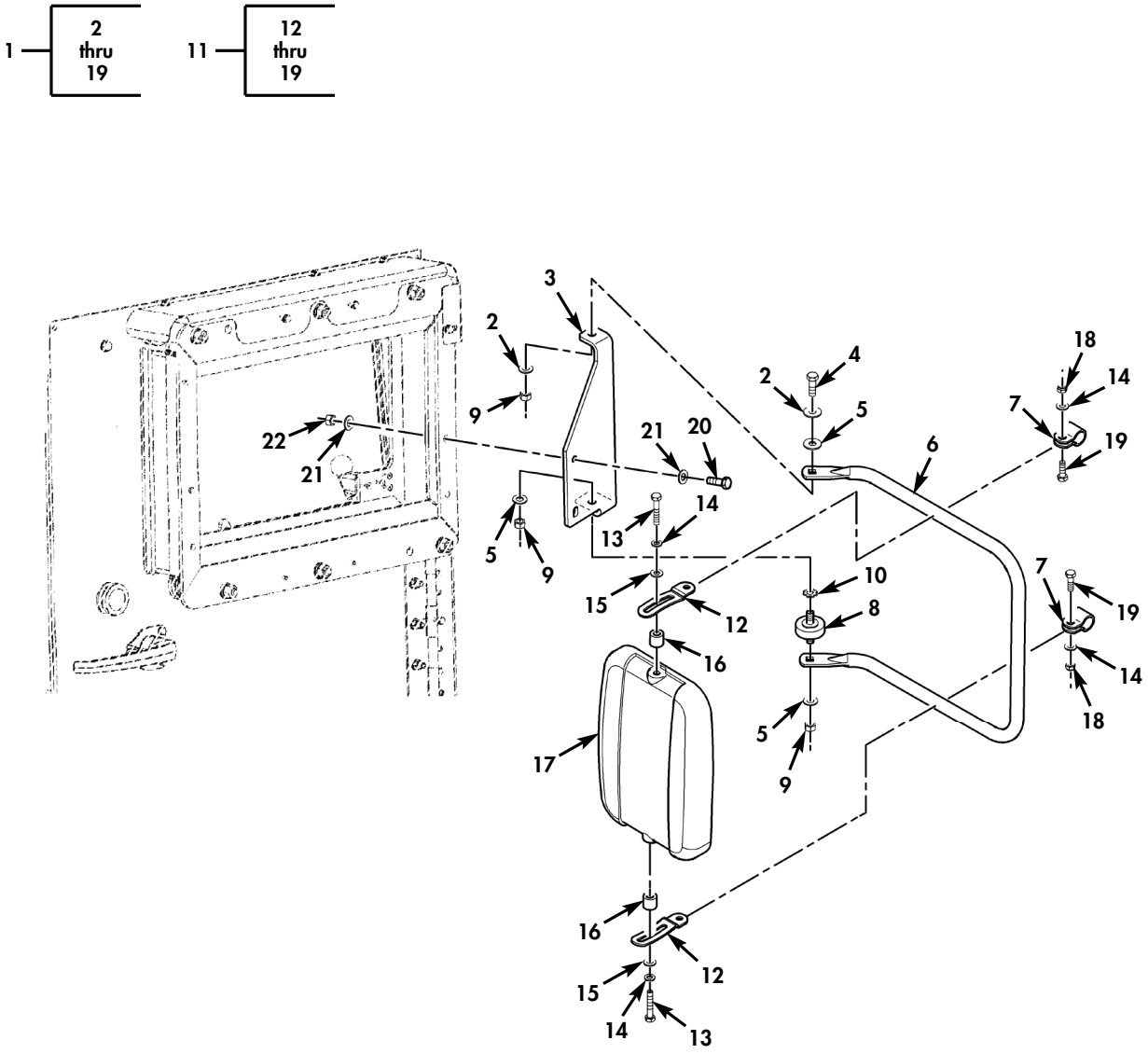

✱ QUANTITY SHOWN
REFLECTS ONE SIDE

Figure 230B. Standard Threat Door Split Rearview Mirrors and Mounting Hardware.

(1) ITEM NO	(2) SMR CODE	(3) NSN	(4) CAGEC	(5) PART NUMBER	(6) DESCRIPTION AND USABLE ON CODES(UOC)	(7) QTY
					GROUP 2202 ACCESSSORY ITEMS	
					FIG. 230B STANDARD THREAT DOOR SPLIT REARVIEW MIRRORS AND MOUNTING HARDWARE	
* 1	PAOOO		34623	6039503	MIRROR ASSEMBLY,REA L.H..... UOC:TTA,UUA,UU2	1
* 1	PAOOO		34623	6039504	MIRROR ASSEMBLY,REA R.H..... UOC:TTA,UUA,UU2	1
* 2	PAOZZ	5310013133562	96906	MS51859-20	.WASHER,FLAT 3/8..... UOC:TTA,UUA,UU2	2
* 3	PAOZZ	2590015693285	34623	6039447	.BRACKET,VEHICULAR C..... UOC:TTA,UUA,UU2	1
* 4	PAOZZ	5305005432419	80204	B1821BH038C113N	.SCREW,CAP,HEXAGON H 3/8-16 X 1.125 UOC:TTA,UUA,UU2	3
* 5	PAOZZ	5310000806004	96906	MS27183-14	.WASHER,FLAT 3/8..... UOC:TTA,UUA,UU2	3
* 6	PAOZZ	2540015702987	34623	6039466	.ARM,REARVIEW MIRROR L.H. OR R.H... UOC:TTA,UUA,UU2	1
* 7	PAOZZ	5340013153611	19207	12342132	.CLAMP,LOOP..... UOC:TTA,UUA,UU2	2
* 8	PAOZZ	5307013162986	19207	12342133	.STUD,LOCKED IN..... UOC:TTA,UUA,UU2	1
* 9	PAOZZ	5310009359021	96906	MS51943-35	.NUT,SELF-LOCKING,HE 3/8-16..... UOC:TTA,UUA,UU2	3
* 10	PAOZZ		34419	WAS2217	.WASHER,LOCK 3/8..... UOC:TTA,UUA,UU2	1
* 11	PAOOO	2540013141190	19207	12480726	.MIRROR HEAD,VEHICUL L.H..... UOC:TTA,UUA,UU2	1
* 11	PAOOO	2540013141189	19207	12480725	.MIRROR HEAD,VEHICUL R.H..... UOC:TTA,UUA,UU2	1
* 12	PAOZZ	2540013142101	19207	12480727	..ARM,REARVIEW MIRROR..... UOC:TTA,UUA,UU2	2
* 13	PAOZZ	5306002264832	80204	B1821BH031C175N	..BOLT,MACHINE 5/16-18 X 1.75..... UOC:TTA,UUA,UU2	2
* 14	PAOZZ	5310000120393	24617	120393	..WASHER,FLAT 5/16..... UOC:TTA,UUA,UU2	4
* 15	PAOZZ	5310000120214	24617	120214	..WASHER,LOCK 5/16..... UOC:TTA,UUA,UU2	2
* 16	PAOZZ	5365013153595	70082	7243	..SPACER,SLEEVE..... UOC:TTA,UUA,UU2	2
* 17	XAOZZ		81349	M32201-1	..MIRROR HEAD,VEHICUL L.H..... UOC:TTA,UUA,UU2	1
* 17	XAOZZ		81349	M32201-2	..MIRROR HEAD,VEHICUL R.H..... UOC:TTA,UUA,UU2	1
* 18	PAOZZ	5310015639653	81349	M45913/4-5CG8Z	..NUT,SELF-LOCKING 5/16-18..... UOC:TTA,UUA,UU2	2
* 19	PAOZZ	5306002264827	80204	B1821BH031C100N	..BOLT,MACHINE 5/16-18 X 1.00..... UOC:TTA,UUA,UU2	2
* 20	PAOZZ	5305005432419	80204	B1821BH038C113N	SCREW,CAP,HEXAGON H 3/8-16 X 1.125. UOC:TTA,UUA,UU2	2
* 21	PAOZZ	5310000814219	96906	MS27183-12	WASHER,FLAT 5/16..... UOC:TTA,UU1,UU2	4
* 22	PAOZZ	5310008140673	81349	M45913/3-5CG8C	NUT,SELF-LOCKING,HE 5/16-18..... UOC:TTA,UU1,UU2	2

END OF FIGURE

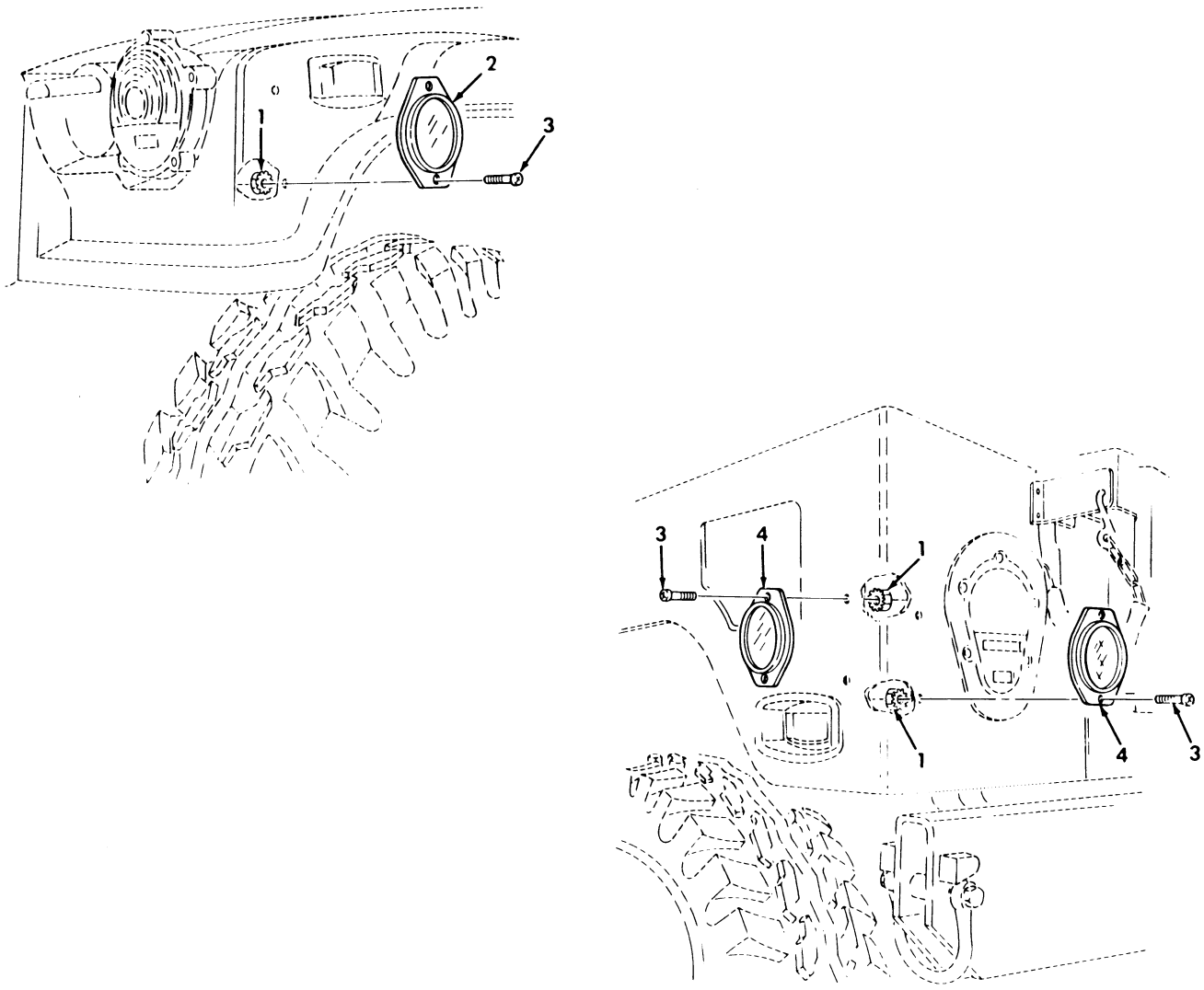

Figure 231. Reflectors.

(1) ITEM NO	(2) SMR CODE	(3) NSN	(4) CAGEC	(5) PART NUMBER	(6) DESCRIPTION AND USABLE ON CODES(UOC)	(7) QTY
					GROUP 2202 ACCESSORY ITEMS	
					FIG.231 REFLECTORS	
1	PAOZZ	5310012522999	34623	5593033	NUT,SELF-LOCKING,AS 1/4-20.....	12
* 2	PAOZZ	9905014852102	19207	12342500-2	REFLECTOR,INDICATIN AMBER,FRONT.... SIDE	2
3	PAOZZ	5305009881724	96906	MS35206-280	SCREW,MACHINE 1/4-20 X 5/8.....	12
* 4	PAOZZ	9905014784267	34623	12342500-1	REFLECTOR,INDICATIN RED,REAR AND REAR SIDE.....	4

END OF FIGURE

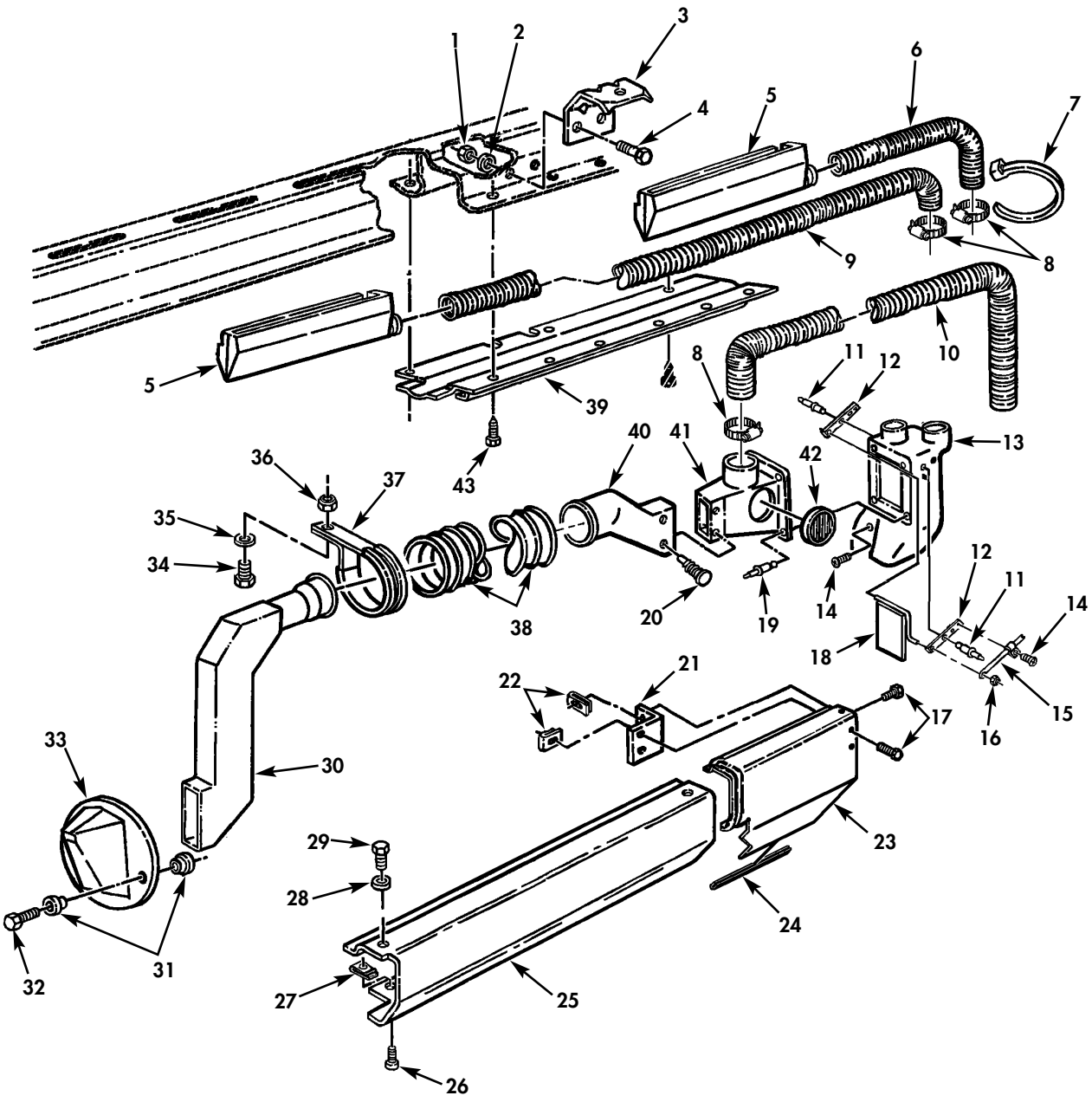

Figure 232. Diverter Assembly, Defroster, and Heater Ducting.

(1) ITEM NO	(2) SMR CODE	(3) NSN	(4) CAGEC	(5) PART NUMBER	(6) DESCRIPTION AND USABLE ON CODES(UOC)	(7) QTY
					GROUP 2202 ACCESSORY ITEMS	
					FIG. 232 DIVERTER ASSEMBLY, DEFROSTER,AND HEATER DUCTING	
* 1	PAOZZ	5310000614650	96906	M45913/3-4CG8C	NUT,SELF-LOCKING..... UOC:XAA	3
* 2	PAOZZ	5310011023270	24617	2436161	WASHER,FLAT 1/4..... UOC:XAA	3
* 3	PAOZZ	5340014764374	19207	12446765	BRACKET,DOUBLE ANGL..... UOC:XAA	2
* 4	PAOZZ	5305005434372	80204	B1821BH038C075N	SCREW,CAP HEXAGON H 3/8-16 X 3/4... UOC:XAA	2
* 5	PFOZZ	2910011845498	19207	12339292-1	NOZZLE,DEFROSTER R.H. AND L.H..... UOC:XAA	2
* 6	PAOZZ	4720014749148	19207	12447010-1	HOSE,AIRDUCT..... UOC:XAA	1
* 7	PAOZZ	5975010345871	96906	MS3367-7-0	STRAP,TIEDOWN,ELECT..... UOC:XAA	1
* 8	PAOZZ	4730010921904	66295	SIZE 83	CLAMP,HOSE..... UOC:XAA	3
* 9	PAOZZ	4720014455690	19207	12447010-3	HOSE,AIRDUCT..... UOC:XAA	1
* 10	PAOZZ	4720014446433	34623	12447010-2	HOSE,AIRDUCT..... UOC:XAA	1
* 11	PAOZZ	5320000835009	81349	M24243/1-A403	RIVET,BLIND..... UOC:XAA	2
* 12	PAOZZ	2590014559123	19207	12460233	BRACKET,MOUNTING..... UOC:XAA	2
* 13	PAOZZ	2540014472236	34623	12447046	DUCT ASSEMBLY,AIR C..... UOC:XAA	1
* 14	PAOZZ	5305012135024	86403	9414722	SCREW..... UOC:XAA	2
* 15	PAOZZ	5340009907610	96906	MS21333-66	CLAMP,LOOP..... UOC:XAA	1
* 16	PAOZZ	5340013327599	19207	12340258	BUTTON,PLUG..... UOC:XAA	1
* 17	PAOZZ	5305011878757	7X677	274707	SCREW,MACHINE..... UOC:XAA	4
* 18	PAOZZ	2540015183339	19207	12469194	DIFFUSER,AIR,VEHICU..... UOC:XAA	1
* 19	PAOZZ	5320012751998	11815	BAPKTR-64	RIVET,BLIND 3/8 DIA., OVERSIZE .188-.250 GRIP..... UOC:XAA	4
* 20	PAOZZ	532501973460	02768	354-280308-00-0078	FASTENER,SPRING TEN..... UOC:XAA	2
* 21	PAOZZ	5340011897554	19207	12339261	BRACKET,ANGLE..... UOC:XAA	1
* 22	PAOZZ	5310012155356	19207	12339694	NUT,SHEET SPRING #10-24..... UOC:XAA	4
* 23	PAOZZ	5340014702069	19207	12447013	COVER,ACCESS..... UOC:XAA	1

(1) ITEM NO	(2) SMR CODE	(3) NSN	(4) CAGEC	(5) PART NUMBER	(6) DESCRIPTION AND USABLE ON CODES(UOC)	(7) QTY
* 24	PAOZZ	2590015073608	2L480	SD1130 5.38″MIN/ 5.62″MAX	BEZEL,AUTO TRIM..... UOC:XAA	1
* 25	PAOZZ	2540014446642	34623	12447012	DUCT ASSEMBLY,AIR C..... UOC:XAA	1
* 26	PAOZZ	5305014479227	24617	9414726	SCREW,TAPPING..... UOC:XAA	10
* 27	PAOZZ	5310014483219	19207	12339426	NUT,SHEET SPRING..... UOC:XAA	10
* 28	PAOZZ	5310014124013	24617	2436163	WASHER,FLAT 3/8..... UOC:XAA	2
* 29	PAOZZ	5305000680508	80204	B1821BH025C075N	SCREW,CAP HEXAGON H 1/4-20 X 3/4... UOC:XAA	2
* 30	PAOZZ	2540014748562	19207	12447047	HOUSING,HEATING DIR L.H..... UOC:XAA	1
* 31	PAOZZ	5365014696343	19207	12460385	SPACER,SLEEVE..... UOC:XAA	6
* 32	PAOZZ	5305014614396	3M915	9425170	SCREW,TAPPING #10-24 X 1.00..... UOC:XAA	3
* 33	PAOZZ	2540014633097	34623	12460386	DUCT ASSEMBLY,AIR C..... UOC:XAA	1
* 34	PAOZZ	5305002400194	96906	MS51849-76	SCREW,MACHINE #10-24 X 3/4..... UOC:XAA	2
* 35	PAOZZ	5310000145850	96906	MS27183-42	WASHER,FLAT #10..... UOC:XAA	2
* 36	PAOZZ	5310012699245	7X677	190254	NUT,SELF-LOCKING HE #10-24..... UOC:XAA	2
* 37	PAOZZ	5340001194708	80205	NAS1715D13NH	CLAMP,LOOP..... UOC:XAA	2
* 38	PAOZZ	4720014742666	34623	12447010-5	TUBING,NONMETALLIC..... UOC:XAA	1
* 39	PFOZZ	2510013070152	19207	12339201-1	PANEL,BODY,VEHICULA..... UOC:XAA	1
* 40	PAOZZ	2540014445340	34623	12447050	HOUSING,AIR INTAKE..... UOC:XAA	1
* 41	PFOZZ	2540014446615	34623	12447130	DUCT ASSEMBLY,AIR C..... UOC:XAA	1
* 42	PAOZZ	2540014559308	19207	12460434	VENTILATOR,AIR CIRC..... UOC:XAA	1
* 43	PAOZZ	5305012553588	7X677	164830	SCREW,TAPPING 3/8-16 X 1/2..... UOC;XAA	6

END OF FIGURE

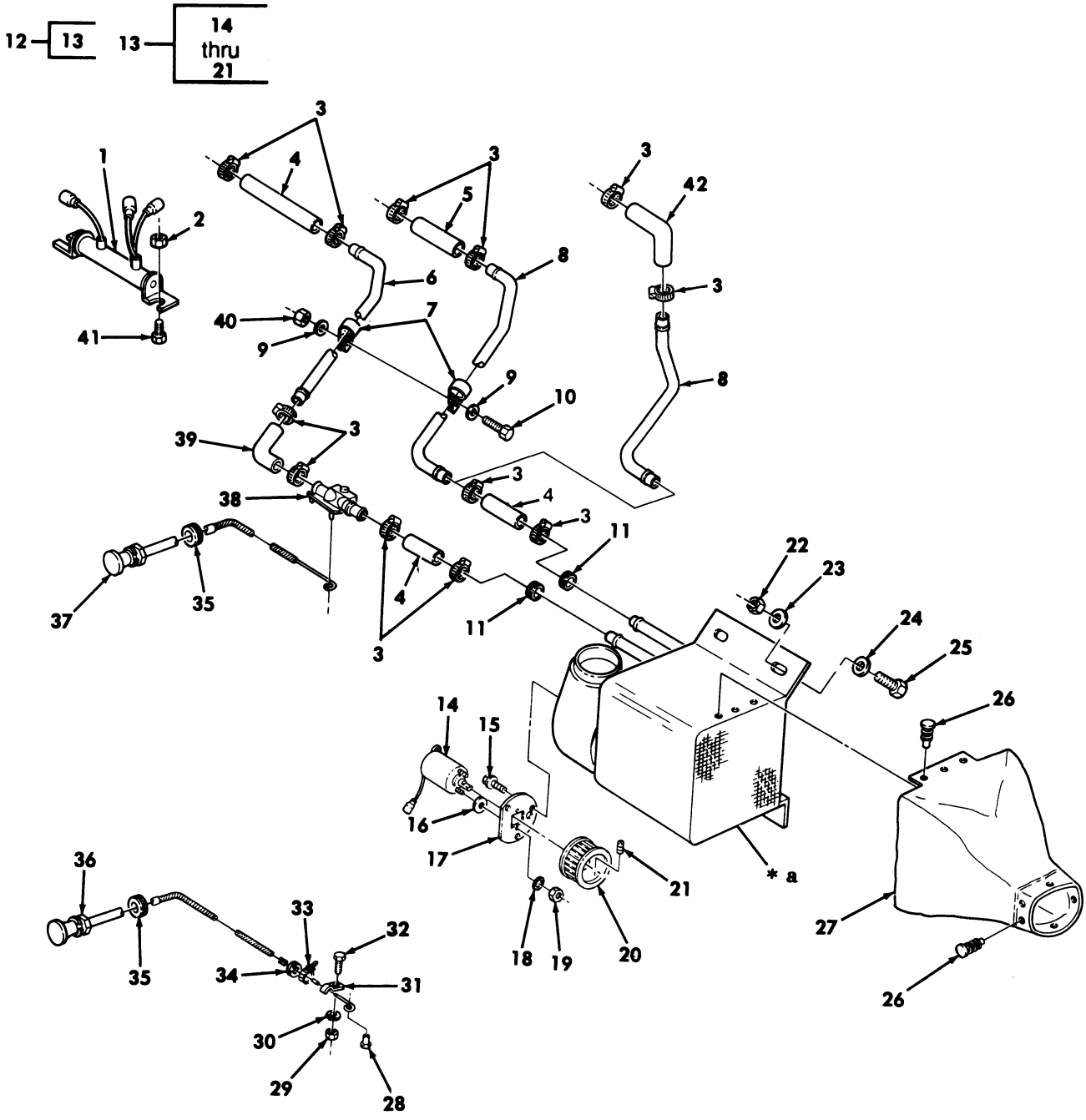

* a PART OF ITEM 12

Figure 233. Heater Assembly, Water Valve, and Controls.

(1) ITEM NO	(2) SMR CODE	(3) NSN	(4) CAGEC	(5) PART NUMBER	(6) DESCRIPTION AND USABLE ON CODES(UOC)	(7) QTY
					GROUP 2202 ACCESSORY ITEMS	
					FIG. 233 HEATER ASSEMBLY,WATER VALVE,AND CONTROLS	
* 1	PAOZZ	5905011839636	19207	12338468	RESISTOR,FIXED,WIRE..... UOC:XAA	1
* 2	PAOZZ	5310011480240	7X677	9419143	NUT,PLAIN,HEXAGON 1/4-20..... UOC:XAA	2
* 3	PAOZZ	4730009083194	96906	MS35842-11	CLAMP,HOSE PART OF KIT P/N 5705615.. UOC:XAA	10
* 4	MOOZZ		19207	12339293-1	HOSE,NONMETALLIC MAKE FROM HOSE,P/N MS521301A203R,2.5 INCHES LONG..... UOC:XAA	3
* 5	MOOZZ		19207	12339293-5.5	HOSE,NONMETALLIC MAKE FROM HOSE,P/N MS521301A203R,5.5 INCHES LONG..... UOC:XAA	1
* 6	PAOZZ	4710012103504	19207	12339263	TUBE,BENT,METALLIC..... UOC:XAA	1
* 7	PFOZZ	5340012143615	21450	137197	CLAMP,LOOP..... UOC:XAA	3
* 8	PAOZZ	4710014732352	34623	RCSK18121	TUBE,BENT,METALLIC..... UOC:XAA	1
* 8	PAOZZ	4710014886076	34623	12469479	TUBE,BENT METALLIC SERIAL NUMBER 196901 AND ABOVE..... UOC:XAA	1
* 9	PAOZZ	5310011023270	24617	2436161	WASHER,FLAT 1/4..... UOC:XAA	2
* 10	PAOZZ	5305000680508	80204	B1821BH025C075N	SCREW,CAP,HEXAGON H 1/4-20 X 3/4... UOC:XAA	1
* 11	PAOZZ	5325012427083	96906	MS35489-17	GROMMET,NONMETALLIC..... UOC:XAA	2
* 12	PFOOO	2540014743217	19207	12447007	HEATER,VEHICULAR,CO..... UOC:XAA	1
* 13	PAOZZ	6105012116635	92878	30266	.MOTOR,DIRECT CURREN..... UOC:XAA	1
* 14	PAOZZ	6105005129225	92878	30040-01	..MOTOR,DIRECT CURREN..... UOC:XAA	1
* 15	PAOZZ	5305013809163	24617	9414313	..SCREW,ASSEMBLED WAS 1/4-20 X 11/32..... UOC:XAA	2
* 16	PAOZZ	5310000145850	96906	MS27183-42	..WASHER,FLAT #10..... UOC:XAA	2
* 17	PFOZZ	5340013812248	19207	12342809	..PLATE,MOUNTING..... UOC:XAA	1
* 18	PAOZZ	5310005765752	96906	MS35333-39	..WASHER,LOCK #10..... UOC:XAA	2
* 19	PAOZZ	5310009349751	96906	MS35650-302	..NUT,PLAIN,HEXAGON #10-32..... UOC:XAA	2
* 20	PAOZZ	2930013859108	19207	12342808	..IMPELLER,FAN,AXIAL..... UOC:XAA	1
* 21	PAOZZ	5305007245812	80205	MS51964-65	..SETSCREW..... UOC:XAA	1

(1) ITEM NO	(2) SMR CODE	(3) NSN	(4) CAGEC	(5) PART NUMBER	(6) DESCRIPTION AND USABLE ON CODES(UOC)	(7) QTY
* 22	PAOZZ	5310008140673	96906	MS51943-33	NUT,SELF-LOCKING,HE 5/16-18..... UOC:XAA	4
* 23	PAOZZ	5310011191024	24617	2436162	WASHER,FLAT 5/16..... UOC:XAA	4
* 24	PAOZZ	5310000814219	96906	MS27183-12	WASHER,FLAT 5/16..... UOC:XAA	4
* 25	PAOZZ	5305000712066	80204	B1821BH050C100N	SCREW,CAP,HEXAGON H 5/16-18 X 1.00. UOC:XAA	4
* 26	PFOZZ	5325012097843	19207	12339402	GROMMET,NONMETALLIC 1/4 X 5/8..... UOC:XAA	16
* 27	PAOZZ	4720012126403	19207	12340029	DUCT,AIR INTAKE..... UOC:XAA	1
* 28	PAOZZ	5310011981723	19207	12339998-14	NUT,PLAIN,BLIND RIV..... UOC:XAA	1
* 29	PAOZZ	5310009349747	96906	MS35649-262	NUT,PLAIN,HEXAGON #6-32..... UOC:XAA	1
* 30	PAOZZ	5310000454007	96906	MS35338-41	WASHER,LOCK #6..... UOC:XAA	1
* 31	PAOZZ	5340012155478	75272	CWV-0407	CLAMP,LOOP..... UOC:XAA	1
* 32	PAOZZ	5305002271543	96906	MS51849-33	SCREW,MACHINE #6-32 X .62..... UOC:XAA	1
* 33	PAOZZ	5975012055379	96906	MS3367-7	STRAP,TIEDOWN,ELECT..... UOC:XAA	1
* 34	PAOZZ	5325002766228	87585	ANA9-5	GROMMET,NONMETALLIC..... UOC:XAA	1
* 35	PAOZZ	5325002919366	96906	MS35489-11	GROMMET,NONMETALLIC..... UOC:XAA	2
* 36	PAOZZ	2590011946990	19207	12340531-3	CONTROL ASSEMBLY,PU..... UOC:XAA	1
* 37	PAOZZ	2590012124956	19207	12340531-4	CONTROL ASSEMBLY,PU..... UOC:XAA	1
* 38	PAOZZ	4820011892107	50992	H38C-2619	VALVE,STOP-CHECK..... UOC:XAA	1
* 39	PAOZZ	4720011892218	19207	12339251	HOSE,PREFORMED..... UOC:XAA	1
* 40	PAOZZ	5310000614650	96906	MS51943-31	NUT,SELF-LOCKING,HE 1/4-20..... UOC:XAA	1
* 41	PAOZZ	5305012685680	34623	5593030	SCREW,ASSEMBLED WAS 1/4-20 X 5/8... UOC:XAA	2
* 42	PAOZZ	4730014886163	34623	12469491	ELBOW,HOSE SERIAL NUMBER 196901 AND ABOVE..... UOC:XAA	1

END OF FIGURE

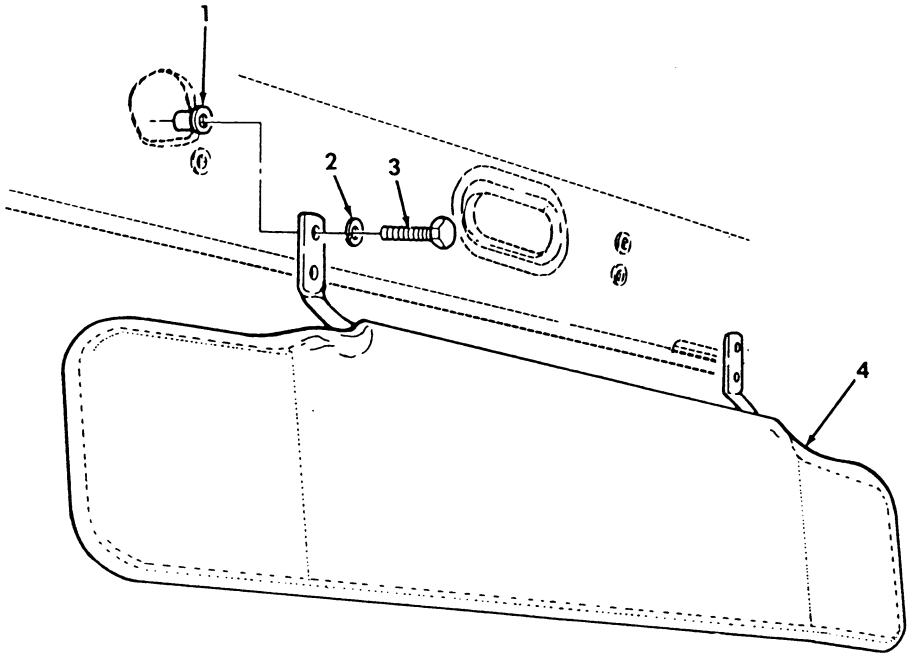

Figure 234. Sun Visor Assembly And Mounting Hardware.

(1) ITEM NO	(2) SMR CODE	(3) NSN	(4) CAGEC	(5) PART NUMBER	(6) DESCRIPTION AND USABLE ON CODES(UOC)	(7) QTY
					GROUP 2202 ACCESSORY ITEMS	
					FIG. 234 SUN VISOR ASSEMBLY AND MOUNTING HARDWARE	
1	PAOZZ	5310014113422	78276	ALS4-420-165	NUT,PLAIN,BLIND RIV.....	8
* 2	PAOZZ	5310006379541	80205	MS35338-46	WASHER,LOCK 3/8.....	8
3	PAOZZ	5305002253843	80204	B1821BH025C100N	SCREW,CAP,HEXAGON H 1/4-20 X 1.00..	8
4	PAOZZ	2540014108793	34623	12446819	VISOR,SUN,VEHICLE.....	2

END OF FIGURE

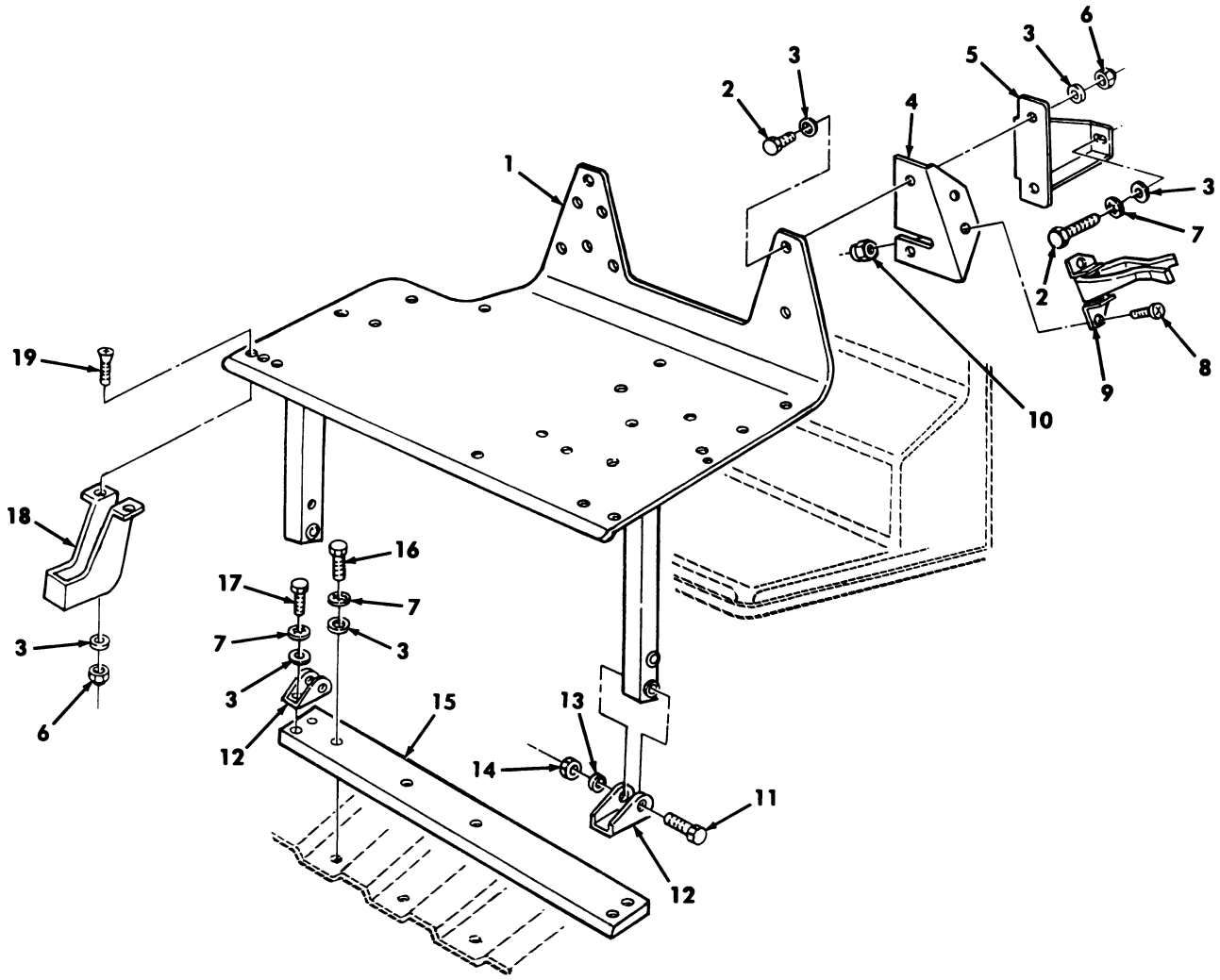

Figure 235. Radio Rack Assembly and Mounting Hardware.

(1) ITEM NO	(2) SMR CODE	(3) NSN	(4) CAGEC	(5) PART NUMBER	(6) DESCRIPTION AND USABLE ON CODES(UOC)	(7) QTY
					GROUP 2202 ACCESSORY ITEMS	
					FIG. 235 RADIO RACK ASSEMBLY AND MOUNTING HARDWARE	
1	PFOZZ	5975011985505	19207	12340167	MOUNTING BASE,ELECT 1/4 FRONT.....	1
2	PAOZZ	5305002253843	80204	B1821BH025C100N	SCREW,CAP,HEXAGON 1/4-20 X 1.00....	6
* 3	PAOZZ	5310011023270	24617	2436161	WASHER,FLAT 1/4.....	21
4	PFOZZ	5340014339279	6W728	4660111	BRACKET,ANGLE GUN MOUNT,UPPER.....	1
5	PAOZZ	5340014330936	19207	12460542-2	BRACKET,MOUNTING..... UOC:XAA	2
5	PAOZZ	5340014336116	6W728	4660716	BRACKET,MOUNTING L.H..... UOC:XBB	1
5	PAOZZ	5340014336117	6W728	4660717	BRACKET,MOUNTING R.H..... UOC:XBB	1
* 6	PAOZZ	5310000614650	96906	M45913/3-4CG8C	NUT,SELF-LOCKING 1/4-20.....	10
7	PAOZZ	5310005501130	96906	MS35333-40	WASHER,LOCK 1/4.....	9
8	PAOZZ	5305014307397	6W728	4397013-072	SCREW,MACHINE #10-32 X 1/2.....	2
9	PAOZZ	1015012000869	19207	12340487	CLAMP,LOCKING,RECOI.....	1
10	PAOZZ	5310014398180	6W728	4397073-003	NUT,SELF-LOCKING,HE #10-32.....	2
* 11	PAOZZ	5305002693217	80205	MS90725-67	SCREW,CAP,HEXAGON H 3/8-16 X 2.25..	2
* 12	PFOZZ	5340014743279	19207	12460543	BRACKET,DOUBLE ANGLE.....	2
13	PAOZZ	5310014124013	24617	2436163	WASHER,FLAT 3/8.....	2
14	PAOZZ	5310009359021	96906	MS51943-35	NUT,SELF-LOCKING,HE 3/8-16.....	2
15	PAOZZ	5310014330938	34623	RCSK17603	PLATE,MOUNTING.....	1
16	PAOZZ	5305000712510	80204	B1821BH025C175N	SCREW,CAP,HEXAGON H 1/4-20 X 1.75..	3
* 17	PAOZZ	5305000680502	80205	MS90725-6	SCREW,CAP,HEXAGON H 1/4-20 X 3/4...	4
* 18	PFOZZ	2540012028545	19207	12340131	BRACKET,HEAD PHONE.....	1
* 19	PAOZZ	5305009585246	80205	MS25190-289	SCREW,MACHINE 1/4-20 X 3/4.....	2

END OF FIGURE

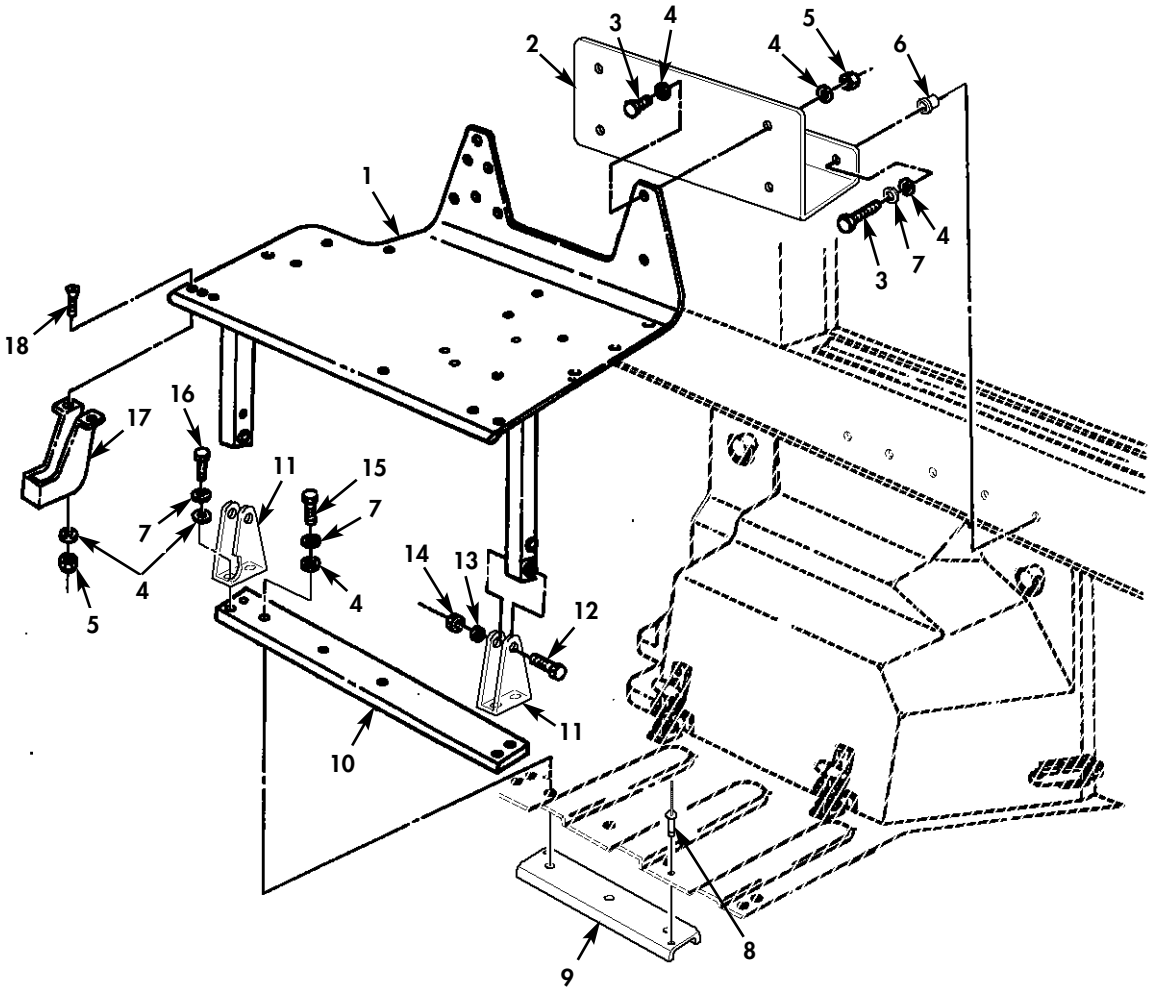

Figure 235A. Radio Rack Assembly and Mounting Hardware.

(1) ITEM NO	(2) SMR CODE	(3) NSN	(4) CAGEC	(5) PART NUMBER	(6) DESCRIPTION AND USABLE ON CODES(UOC)	(7) QTY
					GROUP 2202 ACCESSORY ITEMS	
					FIG. 235A RADIO RACK ASSEMBLY AND MOUNTING HARDWARE	
* 1	PFOZZ	5975011975505	19207	12340167	MOUNTING BASE,ELECT FRONT..... UOC:TTA,TTT,TT1,UUA,UUU,UU1,UU2	1
* 2	PAOZZ		34623	6015517	BRACKET,RADIO MOUNT..... UOC:TTA,TTT,TT1,UUA,UUU,UU1,UU2	1
* 3	PAOZZ	5305002253843	80204	B1821BH025C100N	SCREW,CAP,HEXAGON H 1/4-20 X 1.00.. UOC:TTA,TTT,TT1,UUA,UUU,UU1,UU2	9
* 4	PAOZZ	5310011023270	24617	2436161	WASHER,FLAT 1/4..... UOC:TTA,TTT,TT1,UUA,UUU,UU1,UU2	23
* 5	PAOZZ	5310000614650	96906	M45913/3-4CG8C	NUT,SELF-LOCKING,HE 1/4-20..... UOC:TTA,TTT,TT1,UUA,UUU,UU1,UU2	10
* 6	PAOZZ	5310014113422	78276	ALS4-420-165	NUT,PLAIN,BLIND RIV..... UOC:TTA,TTT,TT1,UUA,UUU,UU1,UU2	5
* 7	PAOZZ	5310005501130	80205	MS35333-40	WASHER,LOCK 1/4..... UOC:TTA,TTT,TT1,UUA,UUU,UU1,UU2	9
* 8	PAOZZ	5320012716357	9K475	MGLP-B6-4	RIVET..... UOC:TTA,TTT,TT1,UUA,UUU,UU1,UU2	2
* 9	PAOZZ	5340015258546	34623	RCSK19811	BRACKET,MOUNTING..... UOC:TTA,TTT,TT1,UUA,UUU,UU1,UU2	1
* 10	PFOZZ	5340014740954	19207	12460544	PLATE MOUNTING..... UOC:TTA,TTT,TT1,UUA,UUU,UU1,UU2	1
* 11	PFOZZ	5340015254656	34623	RCSK19782	BRACKET,DOUBLE ANGL..... UOC:TTA,TTT,TT1,UUA,UUU,UU1,UU2	2
* 12	PAOZZ	5305006388920	80204	B1821BH038C225N	SCREW,CAP,HEXAGON H 3/8-16 X 2.25.. UOC:TTA,TTT,TT1,UUA,UUU,UU1,UU2	2
* 13	PAOZZ	5310014124013	24617	2436163	WASHER,FLAT 3/8..... UOC:TTA,TTT,TT1,UUA,UUU,UU1,UU2	2
* 14	PAOZZ	5310009359021	96906	MS51943-35	NUT,SELF-LOCKING,HE 3/8-16..... UOC:TTA,TTT,TT1,UUA,UUU,UU1,UU2	2
* 15	PAOZZ	5305000712510	80204	B1821BH025C175N	SCREW,CAP,HEXAGON H 1/4-20 X 1.75.. UOC:TTA,TTT,TT1,UUA,UUU,UU1,UU2	3
* 16	PAOZZ	5305000680502	80205	MS90725-6	SCREW,CAP,HEXAGON H 1/4-20 X 3/4... UOC:TTA,TTT,TT1,UUA,UUU,UU1,UU2	4
* 17	PFOZZ	2540012028545	19207	12340131	BRACKET,HEAD PHONE..... UOC:TTA,TTT,TT1,UUA,UUU,UU1,UU2	1
* 18	PAOZZ	5305009585246	80205	MS35190-289	SCREW,MACHINE 1/4-20 X 3/4..... UOC:TTA,TTT,TT1,UUA,UUU,UU1,UU2	2

END OF FIGURE

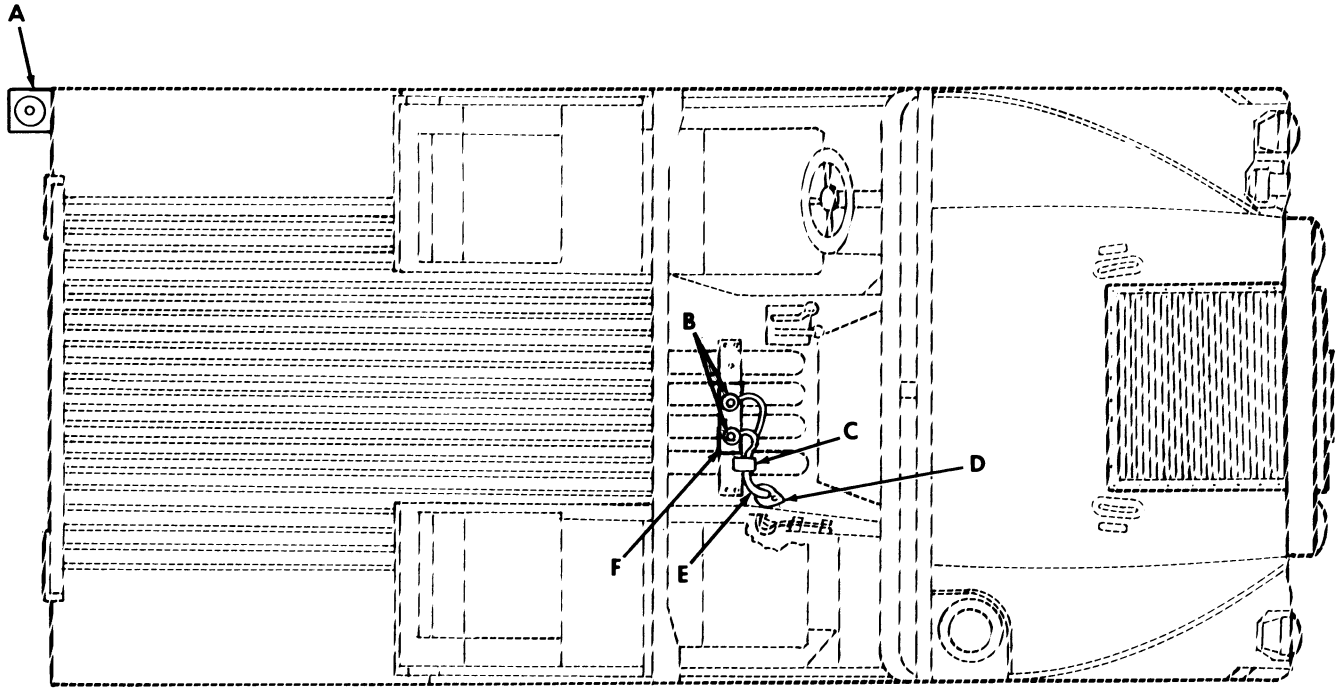

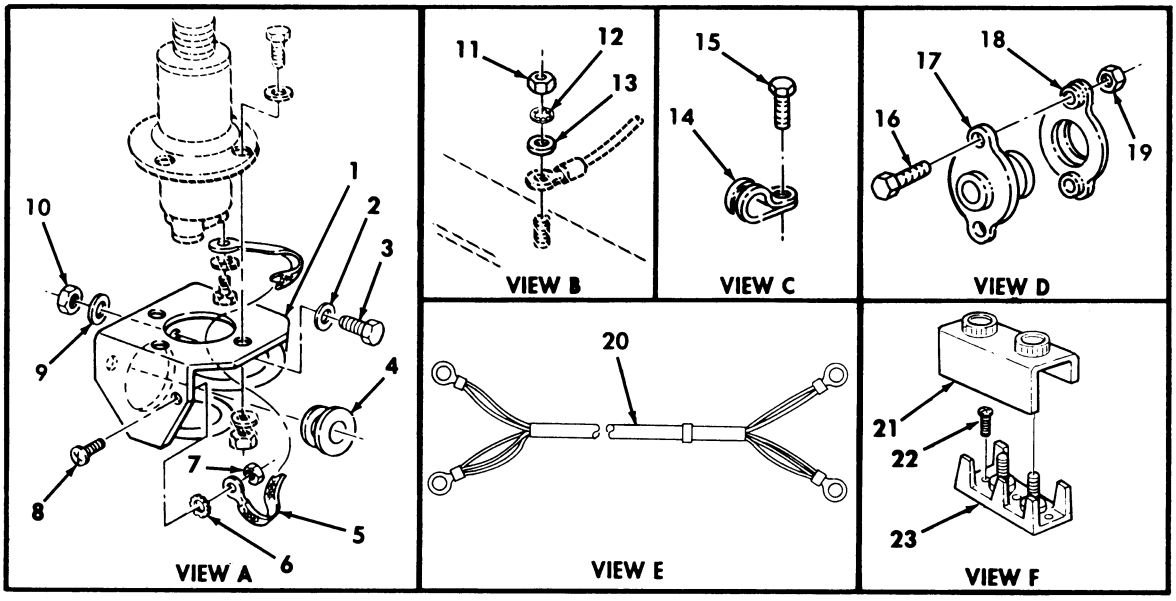

Figure 236. Radio Cable, Main Power – M1114.

(1) ITEM NO	(2) SMR CODE	(3) NSN	(4) CAGEC	(5) PART NUMBER	(6) DESCRIPTION AND USABLE ON CODES(UOC)	(7) QTY
					GROUP 2202 ACCESSORY ITEMS	
					FIG. 236 RADIO CABLE,MAIN POWER-M1114	
1	PFOZZ	5340011975470	19207	12340364	BRACKET,MOUNTING..... UOC:XBB	1
2	PAOZZ	5310011191024	24617	2436162	WASHER,FLAT 5/16..... UOC:XBB	3
* 3	PAOZZ	5306002258499	80205	MS90725-34	BOLT,MACHINE 5/16-18 X 1.00..... UOC:XBB	3
4	PAOZZ	5325012085424	19207	12338098	GROMMET,NONMETALLIC..... UOC:XBB	1
5	PAOZZ	6150012078120	34623	12338099-1	LEAD,ELECTRICAL..... UOC:XBB	1
6	PAOZZ	5310000809786	96906	MS45904-60	WASHER,LOCK..... UOC:XBB	1
7	PAOZZ	5310012514503	24617	9411893	NUT,LOCK #10-32..... UOC:XBB	1
8	PAOZZ	5305009897434	96906	MS35207-263	SCREW,MACHINE #10-32 X 1/2..... UOC:XBB	1
9	PAOZZ	5310012087576	19207	12338095	WASHER,FLAT 5/16..... UOC:XBB	3
10	PAOZZ	5310008140673	96906	MS51943-33	NUT,SELF-LOCKING,HE 5/16-18..... UOC:XBB	3
11	PAOZZ	5310009265913	96906	MS35691-23	NUT,PLAIN,HEXAGON..... UOC:XBB	2
* 12	PAOZZ	5310001800277	80205	MS35333-76	WASHER,LOCK..... UOC:XBB	2
13	PAOZZ	5310010583986	80205	MS14151-5	WASHER,FLAT..... UOC:XBB	2
* 14	PAOZZ	5340009899222	80205	MS21333-74	CLAMP,LOOP..... UOC:XBB	1
15	PAOZZ	5305001804966	96906	MS51849-64	SCREW,MACHINE..... UOC:XBB	1
16	PAOZZ	5305002253843	80204	B1821BH025C100N	SCREW,CAP,HEXAGON H 1/4-20 X 1.00.. UOC:XBB	2
17	PAOZZ	5325014331735	34623	RCSK17766	GROMMET,NONMETALLIC..... UOC:XBB	1
18	PFOZZ	2590004543620	19207	12338092	RETAINER,ASSEMBLY..... UOC:XBB	1
19	PAOZZ	5310011520598	24617	271172	NUT,SELF-LOCKING,AS..... UOC:XBB	2
20	PFOZZ	6150014337000	19207	RCSK17609	CABLE ASSEMBLY,SPEC..... UOC:XBB	1
21	PAOZZ	5940013615200	96906	MS18029-5S2	COVER,TERMINAL BOAR..... UOC:XBB	1
22	PAOZZ	5305008893000	88818	H795220608	SCREW,MACHINE..... UOC:XBB	3
23	PAOZZ	5940013619107	96906	MS27212-5-2	TERMINAL BOARD..... UOC:XBB	1

END OF FIGURE

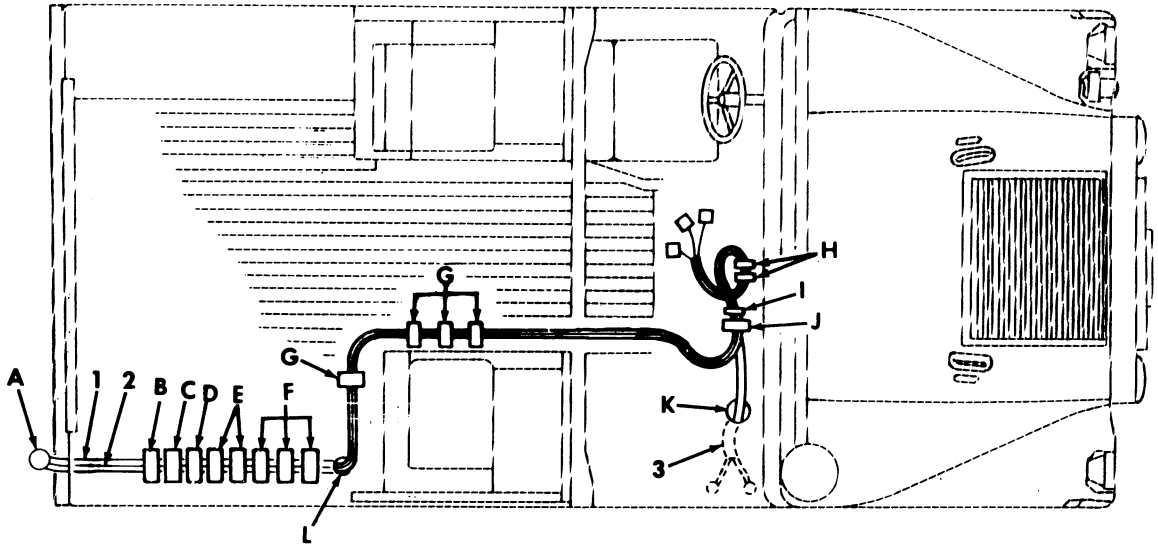

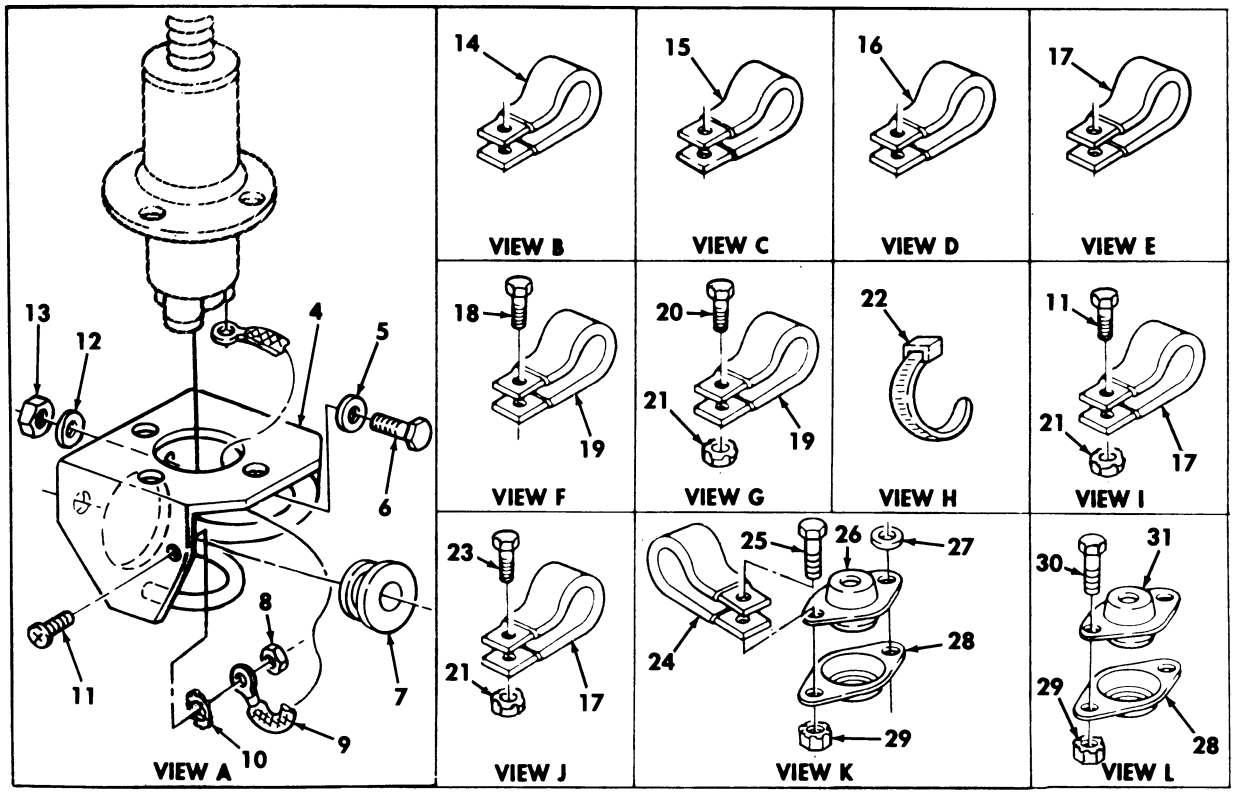

Figure 237. Communications Radio Cables and Related Parts – M1113.

(1) ITEM NO	(2) SMR CODE	(3) NSN	(4) CAGEC	(5) PART NUMBER	(6) DESCRIPTION AND USABLE ON CODES(UOC)	(7) QTY
					GROUP 2202 ACCESSORY ITEMS	
					FIG.237 COMMUNICATIONS RADIO CABLES AND RELATED PARTS M1113	
1	PAOZZ	5995012017495	19207	12338086-3	CABLE ASSEMBLY,RADI..... UOC:XAA	1
2	PAOZZ	5995012014129	19207	12338089-3	CABLE ASSEMBLY,SPEC..... UOC:XAA	1
3	PAOZZ	5995012014128	34623	5577765-B	CABLE ASSEMBLY,SPEC..... UOC:XAA	1
4	PAOZZ	5340011975470	19207	12340364	BRACKET,MOUNTING..... UOC:XAA	1
5	PAOZZ	5310011191024	24617	2436162	WASHER,FLAT 5/16..... UOC:XAA	3
* 6	PAOZZ	5306002258499	80205	MS90725-34	BOLT,MACHINE 5/16-18 X 3/4..... UOC:XAA	3
7	PAOZZ	5325012085424	19207	12338098	GROMMET,NONMETALLIC..... UOC:XAA	1
8	PAOZZ	5310001641790	72582	454749	NUT,SELF-LOCKING,HE #10-32..... UOC:XAA	1
* 9	PAOZZ	6150012078120	34623	12338099-1	LEAD,ELECTRICAL GR..... UOC:XAA	1
10	PAOZZ	5310000809786	96906	MS45904-60	WASHER,LOCK ELECTRICAL LEAD,#10.... UOC:XAA	1
11	PAOZZ	5305009897434	96906	MS35207-263	SCREW,MACHINE #10-32 X 1/2..... UOC:XAA	2
12	PAOZZ	5310012087576	19207	12338095	WASHER,FLAT 5/16..... UOC:XAA	3
13	PAOZZ	5310008140673	96906	MS51943-33	NUT,SELF-LOCKING,HE 5/16-18..... UOC:XAA	3
14	PAOZZ	5340008546730	96906	MS21333-124	CLAMP,LOOP..... UOC:XAA	1
15	PAOZZ	5340000572906	96906	MS21333-73	CLAMP,LOOP..... UOC:XAA	1
16	PAOZZ	5340007247038	96906	MS21333-76	CLAMP,LOOP..... UOC:XAA	1
* 17	PAOZZ	5340000502740	80205	MS21333-75	CLAMP,LOOP..... UOC:XAA	4
18	PAOZZ	5305013615353	24617	9414241	SCREW,TAPPING #10-32 X 3/8..... UOC:XAA	3
* 19	PAOZZ	5340000572904	80205	MS21333-71	CLAMP,LOOP..... UOC:XAA	7
* 20	PAOZZ	5305009931848	80205	MS35207-265	SCREW,MACHINE #10-32 X 3/4..... UOC:XAA	4
21	PAOZZ	5310001249265	72582	271169	NUT,PLAIN,ASSEMBLED #10-32..... UOC:XAA	6
22	PAOZZ	5975012055379	96906	MS3367-7	STRAP,TIEDOWN,ELECT..... UOC:XAA	2
23	PAOZZ	5305009847363	96906	MS35191-272	SCREW,MACHINE #10-32 X 1/2..... UOX:XAA	1
24	PAOZZ	5340008546729	96906	MS21333-103	CLAMP,LOOP..... UOC:XAA	1

(1) ITEM NO	(2) SMR CODE	(3) NSN	(4) CAGEC	(5) PART NUMBER	(6) DESCRIPTION AND USABLE ON CODES(UOC)	(7) QTY
25	PAOZZ	5305000680502	96906	MS90725-6	SCREW,CAP,HEXAGON H 1/4-20 X 3/4... UOC:XAA	2
26	PAOZZ	5325012055378	19207	12338084	GROMMET..... UOC:XAA	1
27	PAOZZ	5310008094058	96906	MS27183-10	WASHER,FLAT 1/4..... UOC:XAA	1
* 28	PAOZZ	2590004543620	19207	12338092	RETAINER,ASSEMBLY..... UOC:XAA	2
29	PAOZZ	5310011520598	24617	271172	NUT,SELF-LOCKING,AS 1/4-20..... UOC:XAA	4
30	PAOZZ	5305002253843	80204	B1821BH025C100N	SCREW,CAP,HEXAGON H 1/4-20 X 1.00.. UOC:XAA	2
31	PAOZZ	5325012053203	19207	12338085	GROMMET..... UOC:XAA	1

END OF FIGURE

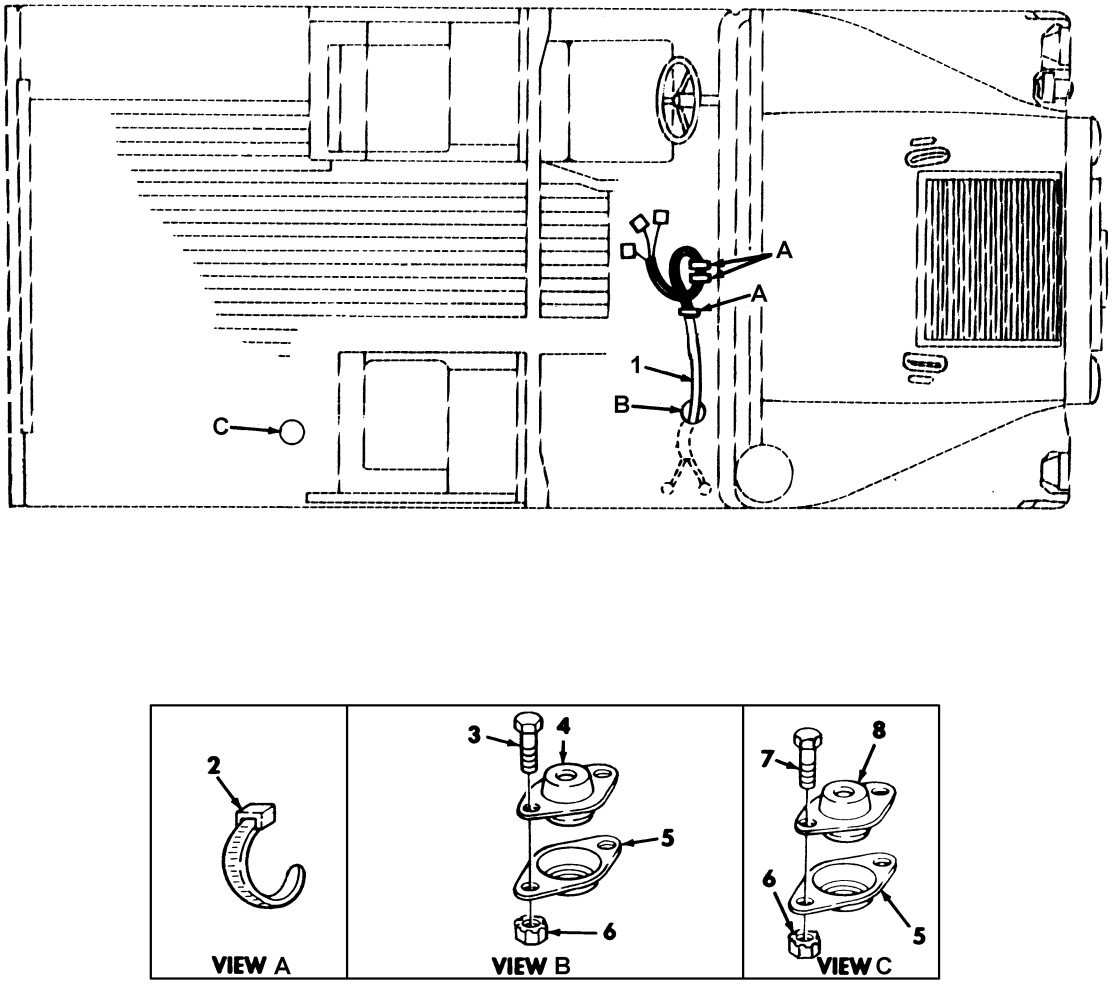

Figure 237A. Communications Radio Power Cable and Related Parts (Serial Number 203980 and Above).

(1) ITEM NO	(2) SMR CODE	(3) NSN	(4) CAGEC	(5) PART NUMBER	(6) DESCRIPTION AND USABLE ON CODES(UOC)	(7) QTY
					GROUP 2202 ACCESSORY ITEMS	
					FIG. 237A COMMUNICATIONS RADIO POWER CABLE AND RELATED PARTS (SERIAL NUMBER 203980 AND ABOVE)	
* 1	PAOZZ	5995012745084	80063	A3014039-5	CABLE ASSEMBLY,POWER.....	1
* 2	PAOZZ	5975010345871	96906	MS3367-7-0	STRAP,TIEDOWN,ELECT.....	3
* 3	PAOZZ	5305002253843	80204	B1821BH025C100N	SCREW,CAP HEXAGON H 1/4-20.X 1.00..	2
* 4	PAOZZ		19207	12338084-1	GROMMET.....	1
* 5	PAOZZ	2590004543620	19207	12338092	RETAINER,ASSEMBLY..... UOC:XBB	1
* 5	PAOZZ	2590004543620	19207	12338092	RETAINER,ASSEMBLY..... UOC:XAA	2
* 6	PAOZZ	5310011520598	24617	271172	NUT,SELF-LOCKING AS..... UOC:XBB	2
* 6	PAOZZ	5310011520598	24617	271172	NUT,SELF-LOCKING AS..... UOC:XAA	4
* 7	PAOZZ	5305000680508	80204	B1821BH025C075N	SCREW,CAP HEXAGON H 1/4-20 X 3/4.... UOC:XAA	2
* 8	PAOZZ	5325012053203	19207	12338085	GROMMET..... UOC:XAA	1

END OF FIGURE

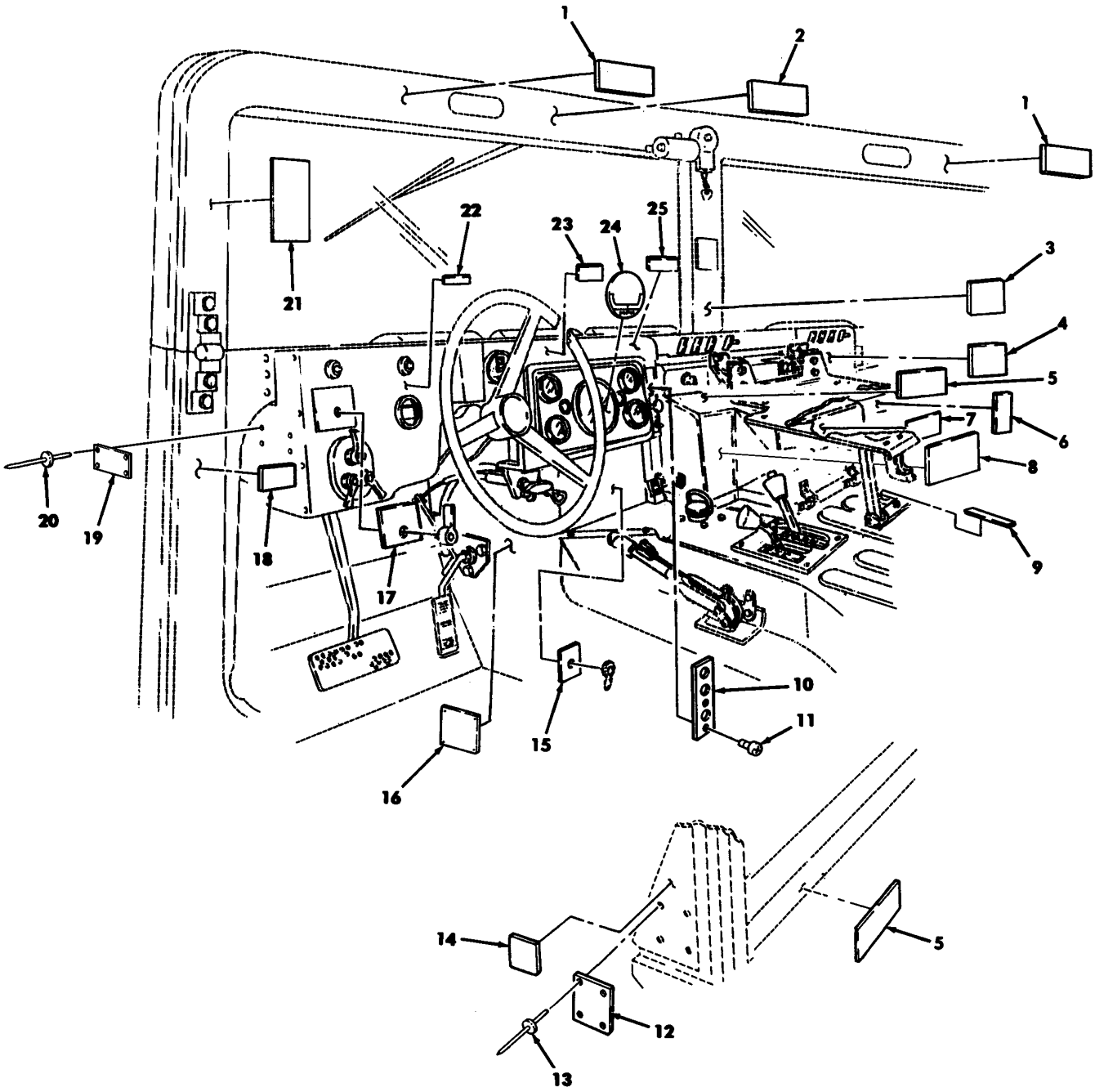

Figure 238. Data Plates, Dash Panel.

(1) ITEM NO	(2) SMR CODE	(3) NSN	(4) CAGEC	(5) PART NUMBER	(6) DESCRIPTION AND USABLE ON CODES(UOC)	(7) QTY
					GROUP 2210 DATA PLATES AND INSTRUCTION HOLDERS	
					FIG. 238 DATA PLATES,DASH PANEL	
* 1	PCOZZ	7690012040077	19207	12339053	DECAL WINDSHIELD CLEANING..... UOC:TTA,UUA,UU1,UU2	2
* 2	PCOZZ	9905001982728	19207	11643398	PLATE,INSTRUCTION CAUTION,HIGH INTENSITY NOISE..... UOC:TTA,UUA,UU1,UU2	1
* 3	PCOZZ	7690013158539	19207	12342165	MARKER,IDENTIFICATI VEHICLE BREAK-IN SERVICE..... UOC:TTA,UUA,UU1,UU2	1
* 4	PFOZZ	9905012039994	19207	12339100	PLATE,INSTRUCTION HEATER AIR CONTROL UOC:TTA,UUA,UU1,UU2	1
* 5	PAOZZ	9905011934065	19207	12339106	PLATE,INSTRUCTION SEAT BELT RETRACTOR..... UOC:TTA,UUA,UU1,UU2	2
* 6	PCOZZ	7690012912974	19207	12340925	DECAL TIEDOWN DATA..... UOC:TTA,UUA,UU1,UU2	1
* 7	PAOZZ	7690015188437	19207	12469274	DECAL SERVICE DATA MANUALS..... UOC:TTA,UUA,UU1,UU2	1
* 8	PAOZZ	7690015188174	19207	12469273	MARKER,IDENTIFICATI DECAL, OPERATING INS..... UOC:TTA,UUA,UU1,UU2	1
* 9	PAOZZ	9905012047776	19207	12340910	PLATE,IDENTIFICATIO FIRE EXTINGUISHER..... UOC:TTA,UUA,UU1,UU2	1
* 10	PCOZA	7690014766510	19207	12447003	MARKER,IDENTIFICATI HEATER NAME PLATE DEFROSTER, TEMPERATURE, FAN... UOC:TTA,TT1,UUA,UU1,UU2	1
* 11	PAOZZ	5305009846191	80205	MS35206-243	SCREW,MACHINE #8-32 X 3/8..... UOC:TTA,UUA,UU1,UU2	2
* 12	PAOZZ	7690015549199	19207	12506674	DECAL NAME PLATE,W/B3..... UOC:UU2	1
* 12	PAOZZ	9905015718855	19207	12518552	DECAL,NAME PLATE UOC:TT1	1
* 12	PAOZZ	9905015674340	19207	12506608	DECAL NAME PLATE..... UOC:TTA	1
* 12	PAOZZ	9905015674341	19207	12506604	DECAL NAME PLATE,W/B1..... UOC:TTA	1
* 12	PAOZZ	9905015674342	19207	12506595	DECAL NAME PLATE..... UOC:UUA	1
* 12	PAOZZ	9905015674343	19207	12506611	DECAL NAME PLATE,W/B2..... UOC:UUA	1
* 12	PAOZZ	9905015667760	19207	12506603	DECAL NAME PLATE..... UOC:UU1	1
* 12	PAOZZ	9905015667762	19207	12506598	DECAL NAME PLATE..... UOC:UU2	1
* 13	PAOZZ	5320000835009	81349	M24243/1-A403	RIVET,BLIND 18 DIA.,.126-187 GRIP... UOC:UUA,UU1,UU2	20

(1) ITEM NO	(2) SMR CODE	(3) NSN	(4) CAGEC	(5) PART NUMBER	(6) DESCRIPTION AND USABLE ON CODES(UOC)	(7) QTY
* 14	PCOZZ	7690013828471	19207	12343054	DECAL DRIVER SEAT ADJUSTMENT..... UOC:TTA,UUA,UU1,UU2	1
* 15	PFOZZ	9905012058635	19207	12339109	PLATE,IDENTIFICATIO DEEP WATER FORDING..... UOC:TTA,UUA,UU1,UU2	1
* 16	PAOZZ		19207	12506596	PLATE,IDENTIFICATIO BAR CODE..... UOC:UUA	1
* 17	PAOZZ	9905012039996	19207	12338475	PLATE,INSTRUCTION IGNITION..... UOC:TTA,UUA,UU1,UU2	1
* 18	PCOZZ	7690012040076	19207	12339063	DECAL RIFLE,M16..... UOC:TTA,UUA,UU1,UU2	2
* 19	PAOZZ	9905014355173	6W728	4668025-002	PLATE,IDENTIFICATION..... UOC:XBB	1
* 20	PAOZZ	5320025167019	6W728	4397044-008	RIVET,BLIND 1/8 X .251-.312 GRIP.... UOC:XBB	4
* 21	PCOZZ	7690014181640	6W728	4668973	LABEL GLASS CARE..... UOC:TTA,UUA,UU1,UU2	2
* 22	PFOZZ	9905012491612	34623	5596514	PLATE,INSTRUCTION NEUTRAL START..... UOC:TTA,UUA,UU1,UU2	1
* 23	PAOZZ	9905011857977	19207	12339105	PLATE,INSTRUCTION STEERING WHEEL LOCKING DEVICE..... UOC:TTA,UUA,UU1,UU2	1
* 24	PCOZZ	7690012564908	19207	12340652	DECAL SPEEDOMETER..... UOC:TTA,UUA,UU1,UU2	1
* 25	PAOZZ	7690012564909	19207	12340917	DECAL HAND THROTTLE CONTROL..... UOC:TTA,UUA,UU1,UU2	1

END OF FIGURE

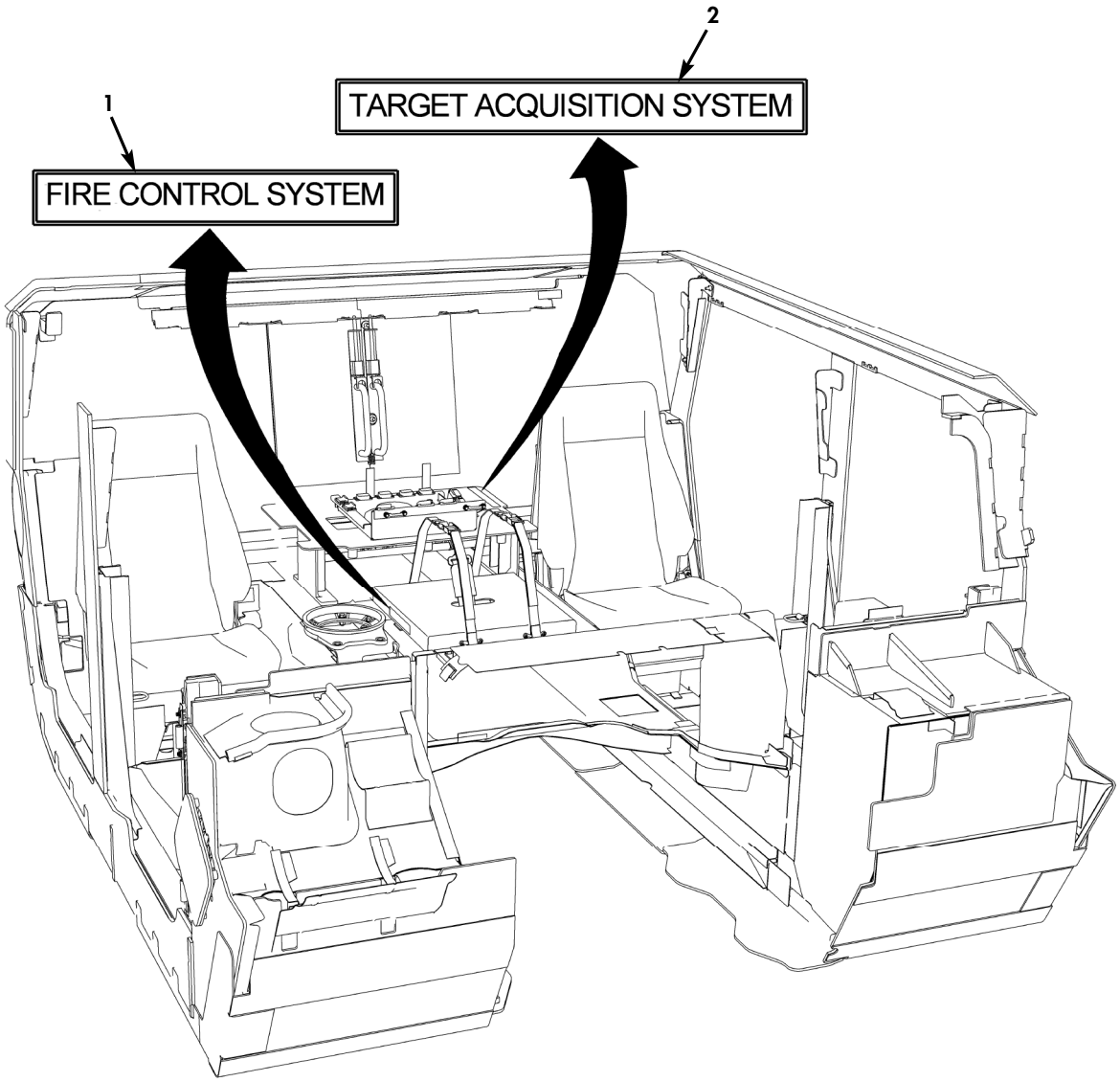

Figure 238A. Decals (Sheet 1 of 3).

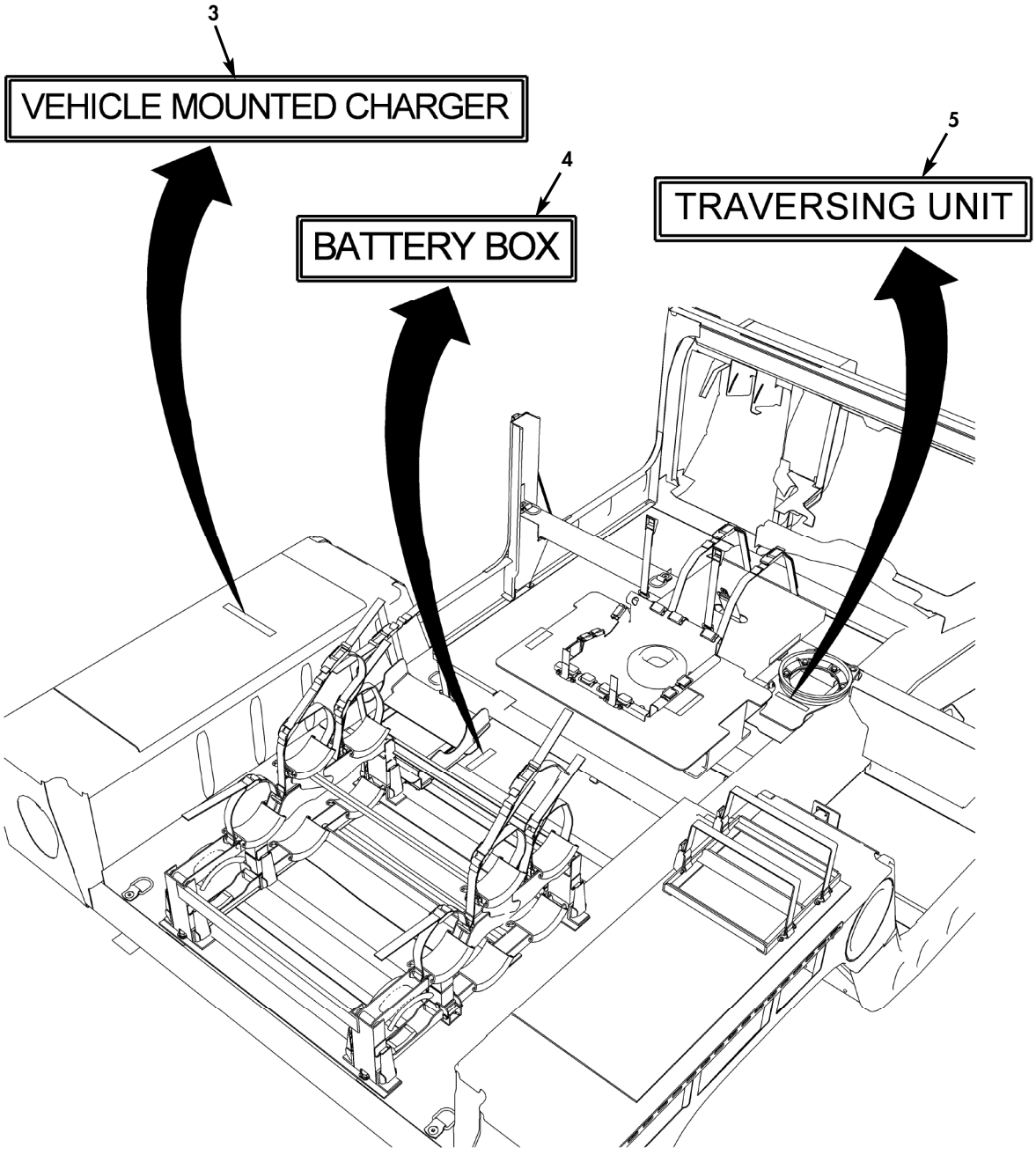

Figure 238A. Decals (Sheet 2 of 3).

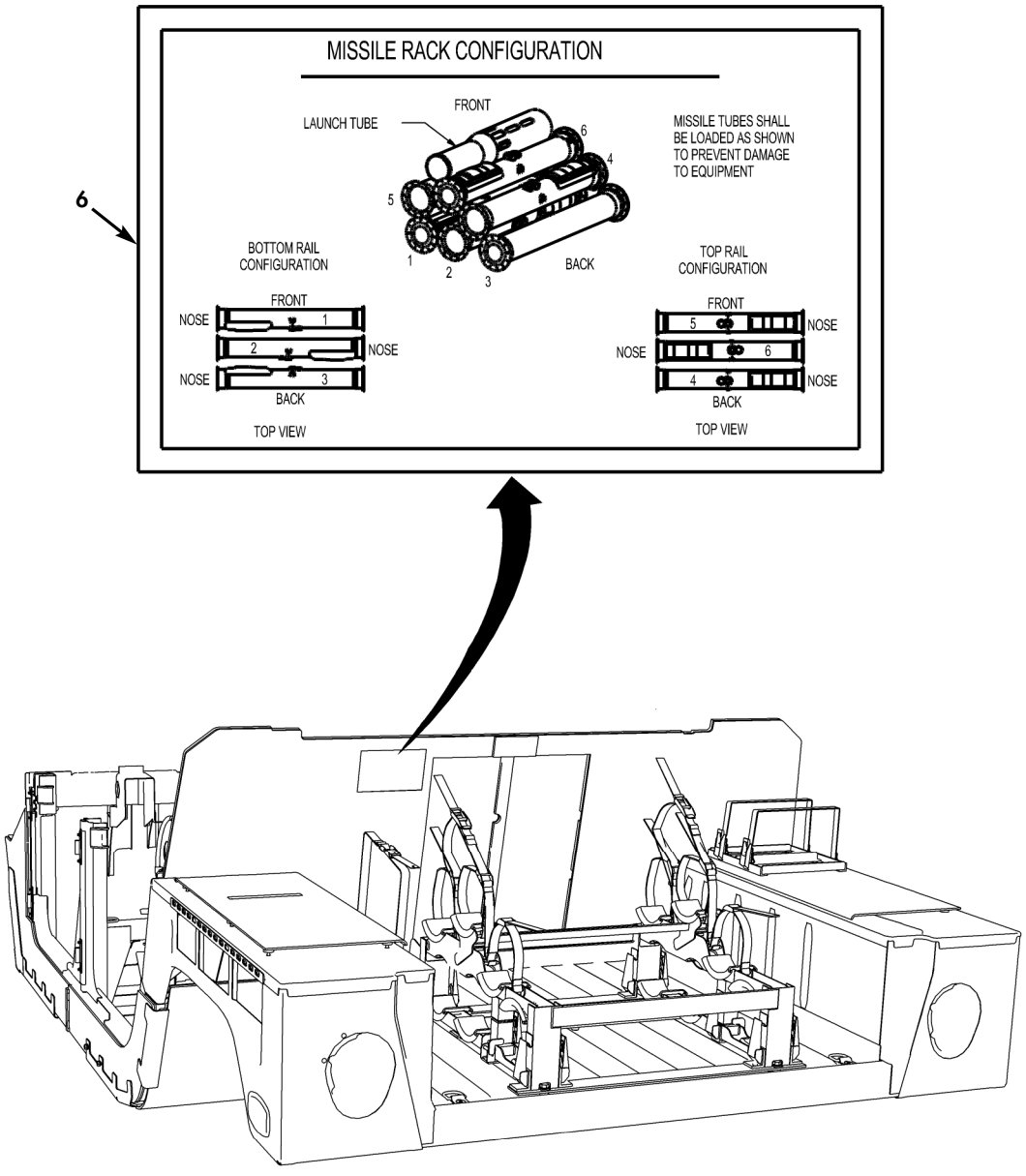

Figure 238A. Decals (Sheet 3 of 3).

(1) ITEM NO	(2) SMR CODE	(3) NSN	(4) CAGEC	(5) PART NUMBER	(6) DESCRIPTION AND USABLE ON CODES(UOC)	(7) QTY
					GROUP 2210 DATA PLATES AND INSTRUCTION HOLDERS	
					FIG. 238A DECALS	
* 1	PAOZZ	7690015714565	19207	12518542	DECAL,FIRE CONTROL UOC:TT1	2
* 2	PAOZZ	7690015713990	19207	12518544	DECAL,TARGET ACQUIS..... UOC:TT1	1
* 3	PAOZZ	7690015717693	19207	12518543	DECAL,CHARGER..... UOC:TT1	1
* 4	PAOZZ	7690015716112	19207	12518541	DECAL,BATTERY BOX..... UOC:TT1	1
* 5	PAOZZ	7690015715878	19207	12518562	DECAL,TRAVERSING UN..... UOC:TT1	1
* 6	PAOZZ	7690015714456	19207	12518540	DECAL,MISSLE RACK..... UOC:TT1	1
					END OF FIGURE	

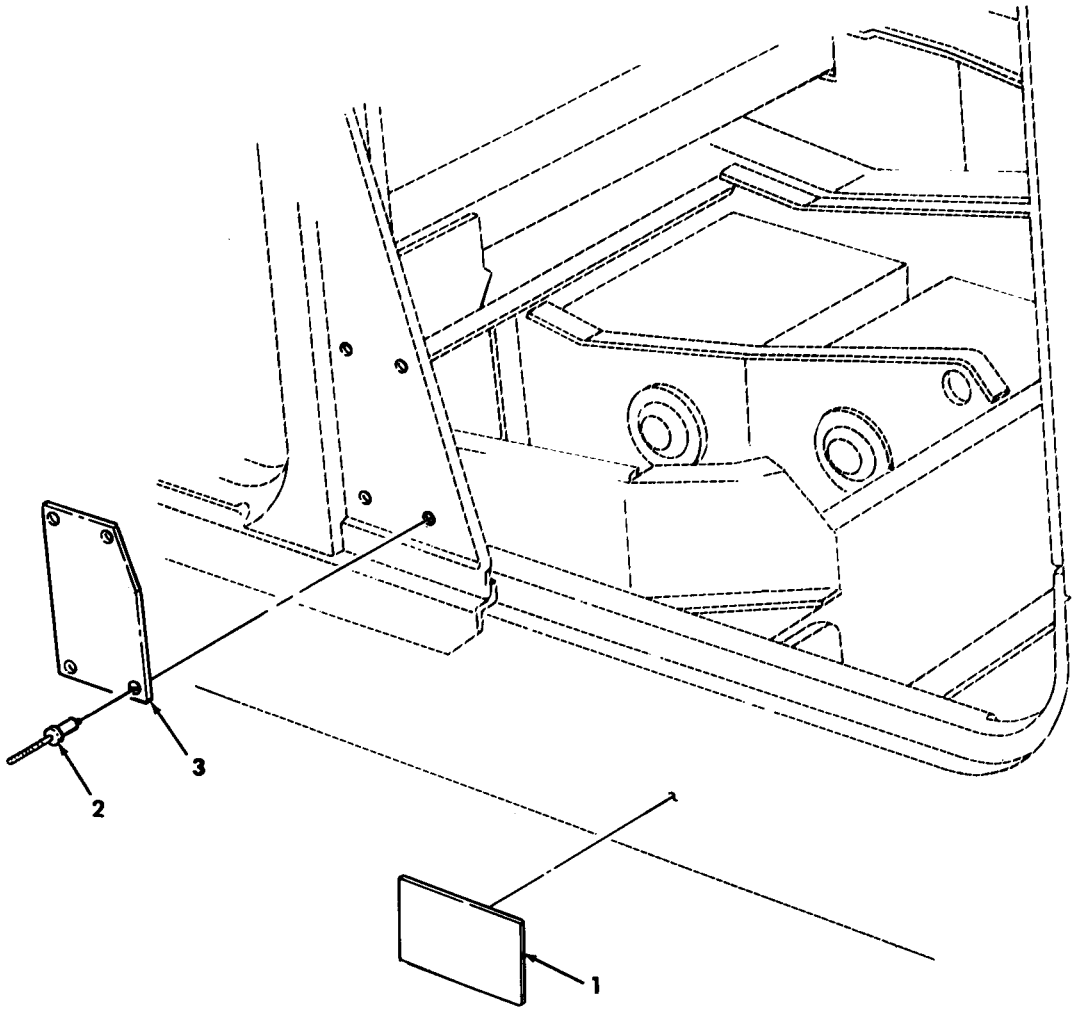

Figure 239. Data Plates, Weight, and Slave Receptacle.

(1) ITEM NO	(2) SMR CODE	(3) NSN	(4) CAGEC	(5) PART NUMBER	(6) DESCRIPTION AND USABLE ON CODES(UOC)	(7) QTY
					GROUP 2210 DATA PLATES AND INSTRUCTION HOLDERS	
					FIG. 239 DATA PLATES,WEIGHT, AND SLAVE RECEPTACLE	
* 1	PFOZZ	9905011879468	19207	12339087	PLATE,INSTRUCTION SLAVE RECEPTACLE.. UOC:TTA,TTT,TT1,UUA,UUU,UU1,UU2,XAA, XBB	1
* 2	PAOZZ	5320000835009	81349	M24243/1-A403	RIVET,BLIND 1/8 DIA.,.126-.187 GRIP. UOC:TTA,TTT,TT1,UUA,UUU,UU1,UU2,XAA, XBB	4
* 3	PAOZZ	9905015558180	19207	12506672	PLATE,IDENTIFICATIO WEIGHT AND DIMENSIONAL DATA AND SLING AND TIE DOWN DATA..... UOC:UU2	1
* 3	PAOZZ	9905015718856	19207	12518554	PLATE,IDENTIFICATIO WEIGHT AND DIMENSIONAL DATA,AND SLING AND TIE DOWN DATA..... UOC:TT1	1
* 3	PAOZZ	9905015673825	19207	12506607	PLATE,IDENTIFICATIO WEIGHT AND DIMENSIONAL DATA,AND SLING AND TIE DOWN DATA..... UOC:TTA	1
* 3	PAOZZ	9905015673824	19207	12506605	PLATE,IDENTIFICATIO WEIGHT AND DIMENSIONAL DATA,AND SLING AND TIE DOWN DATA W/B1..... UOC:TTA	1
* 3	PAOZZ	9905015673826	19207	12506597	PLATE,IDENTIFICATIO WEIGHT AND DIMENSIONAL DATA,AND SLING AND TIE DOWN DATA..... UOC:UUA	1
* 3	PAOZZ	9905015673827	19207	12506610	PLATE,IDENTIFICATIO WEIGHT AND DIMENSIONAL DATA,AND SLING AND TIE DOWN DATA,W/B2..... UOC:UUA	1
* 3	PAOZZ	9905015667761	19207	12506602	PLATE,IDENTIFICATIO WEIGHT AND DIMENSIONAL DATA,AND SLING AND TIE DOWN DATA..... UOC:UU1	1
* 3	PAOZZ	9905015667763	19207	12506600	PLATE,IDENTIFICATIO WEIGHT AND DIMENSIONAL DATA,AND SLING AND TIE DOWN DATA..... UOC:UU2	1
* 3	PAOZZ		19207	12480647	PLATE,IDENTIFICATIO WEIGHT AND DIMENSIONAL DATA, AND SLING AND TIE DOWN DATA..... UOC:UUU	1
* 3	PFOZZ	7690014734645	19207	RCSK17777	DECAL..... UOC:XAA	1
* 3	PFOZZ	9905014338555	19207	RCSK17566	PLATE IDENTIFICATIO WEIGHT AND DIMENSIONAL DATA, AND SLING AND TIE DOWN DATA..... UOC:XAA	1
					END OF FIGURE	

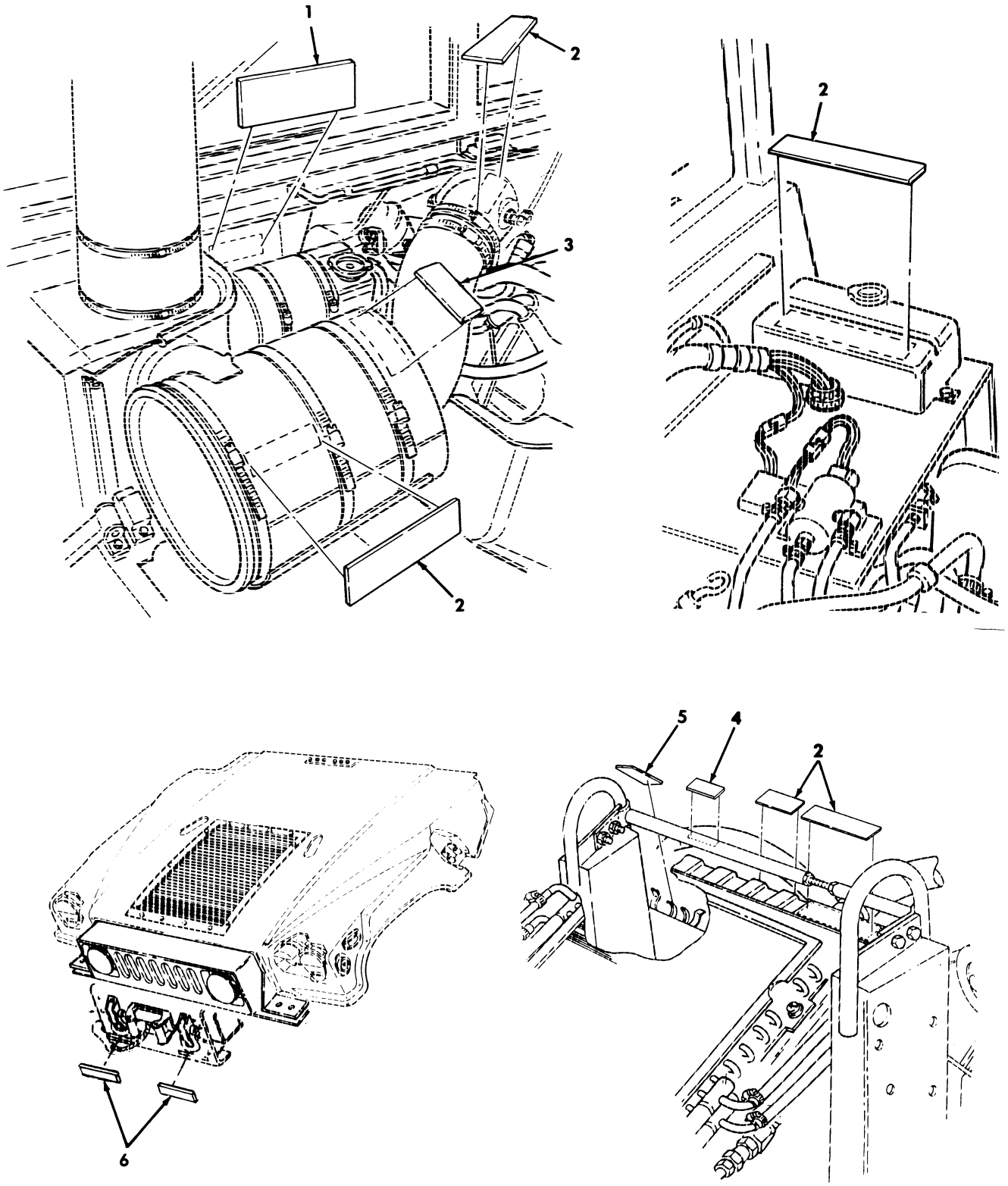

Figure 240. Data Plates, Surge Tank, Fan Shroud, and Cook Stove.

(1) ITEM NO	(2) SMR CODE	(3) NSN	(4) CAGEC	(5) PART NUMBER	(6) DESCRIPTION AND USABLE ON CODES(UOC)	(7) QTY
					GROUP 2210 DATA PLATES AND INSTRUCTION HOLDERS	
					FIG. 240 DATA PLATES,SURGE TANK,FAN SHROUD,AND COOK STOVE	
1	PAOZZ	7690012090864	19207	12339065	MARKER,IDENTIFICATI SURGE TANK,DO NOT REMOVE OR TOUCH WHEN HOT.....	1
2	PAOZZ	9905012489550	19207	12339055	PLATE,INSTRUCTION NO STEP,WHITE LETTERS.....	5
3	PAOZZ	7690014734550	34623	EX4319	DECAL SERPENTINE BELT.....	1
4	PAOZZ	7690011975500	19207	12339064	DECAL FAN SHROUD.....	1
5	PAOZZ	7690011885144	19207	12340909	MARKER,IDENTIFICATI GASOLINE BURNER STOVE STOWAGE.....	1
6	PAOZZ	7690014734532	34623	RCSK17624	DECAL.....	2

END OF FIGURE

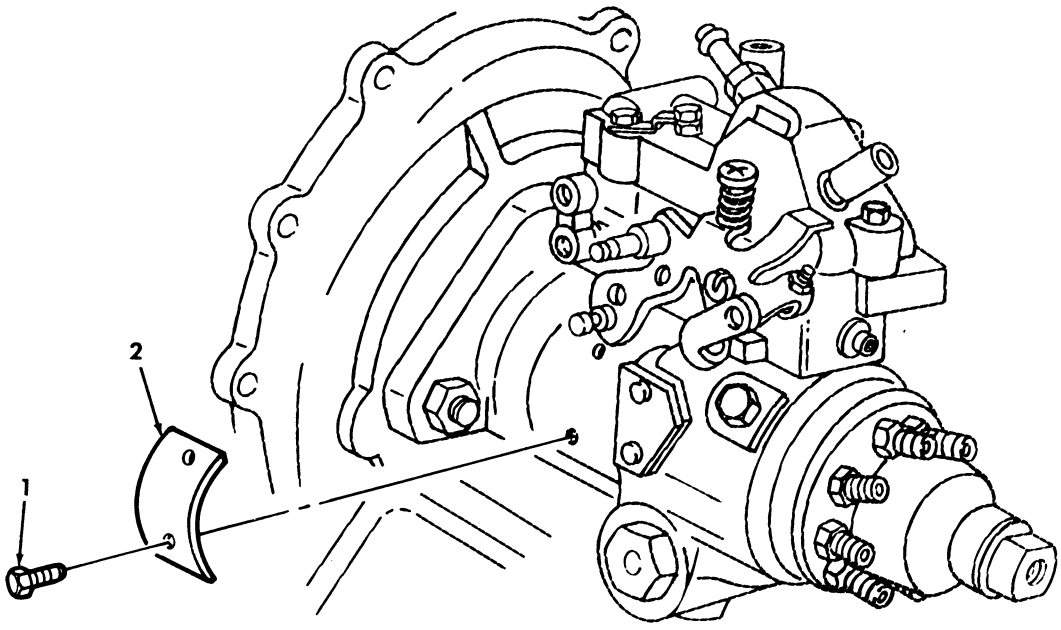

Figure 241. Data Plates, Fuel Pump.

(1) ITEM NO	(2) SMR CODE	(3) NSN	(4) CAGEC	(5) PART NUMBER	(6) DESCRIPTION AND USABLE ON CODES(UOC)	(7) QTY
					GROUP 2210 DATA PLATES AND INSTRUCTION HOLDERS	
					FIG. 241 DATA PLATES,FUEL PUMP	
1	PAHZZ	5305011904555	84760	24419	SCREW,TAPPING.....	2
2	XBHZZ	9905004736379	84760	10394	PLATE,IDENTIFICATIO.....	1

END OF FIGURE

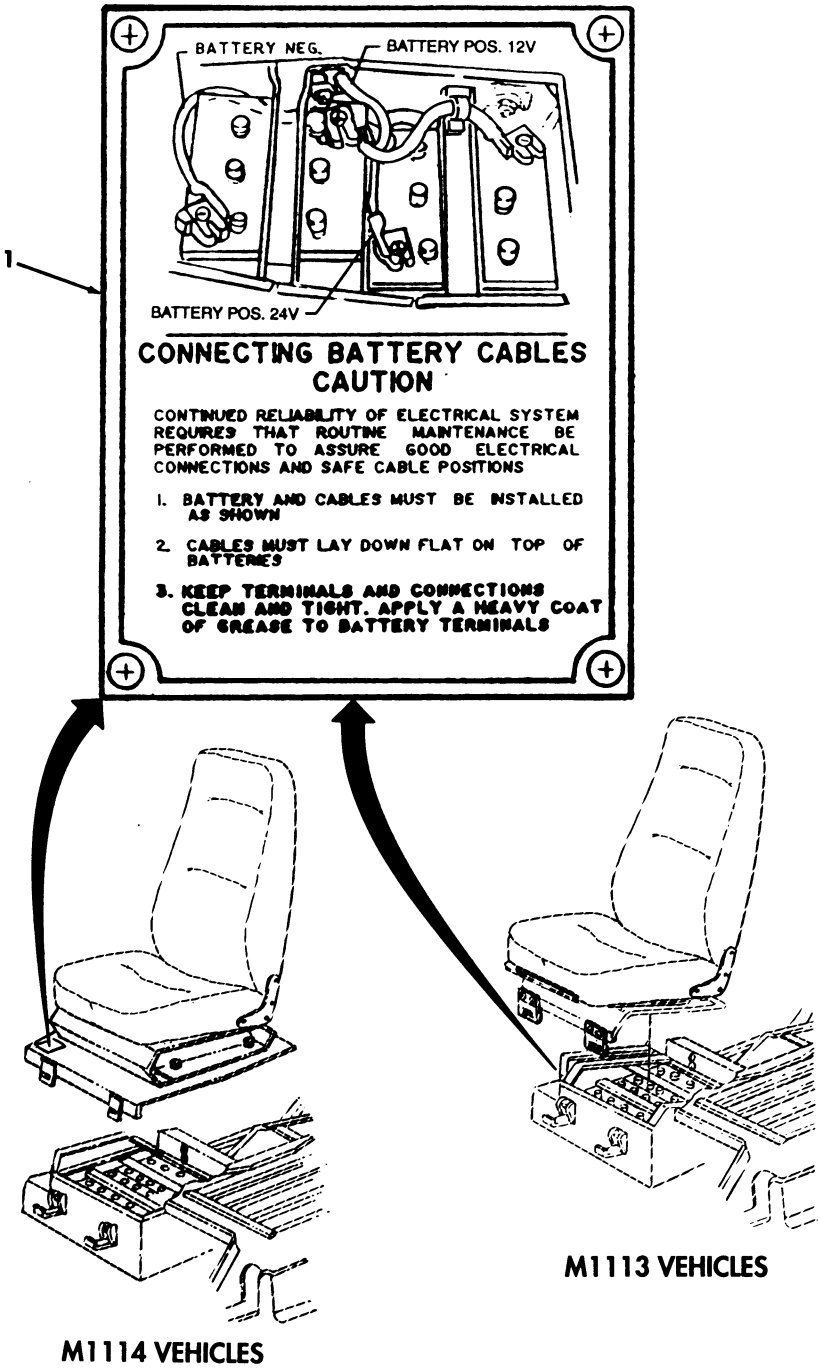

Figure 242. Data Plate, Commander's Seat.

(1) ITEM NO	(2) SMR CODE	(3) NSN	(4) CAGEC	(5) PART NUMBER	(6) DESCRIPTION AND USABLE ON CODES(UOC)	(7) QTY
					GROUP 2210 DATA PLATES AND INSTRUCTION HOLDERS	
					FIG. 242 DATA PLATE,COMMANDER'S SEAT	
1	PAOZZ	9905011853143	19207	12339107	DECAL CONNECTING BATTERY CABLES.... UOC:XAA	1
1	PAOZZ	7690014734594	34623	RCSK17920	DECAL..... UOC:XBB	1

END OF FIGURE

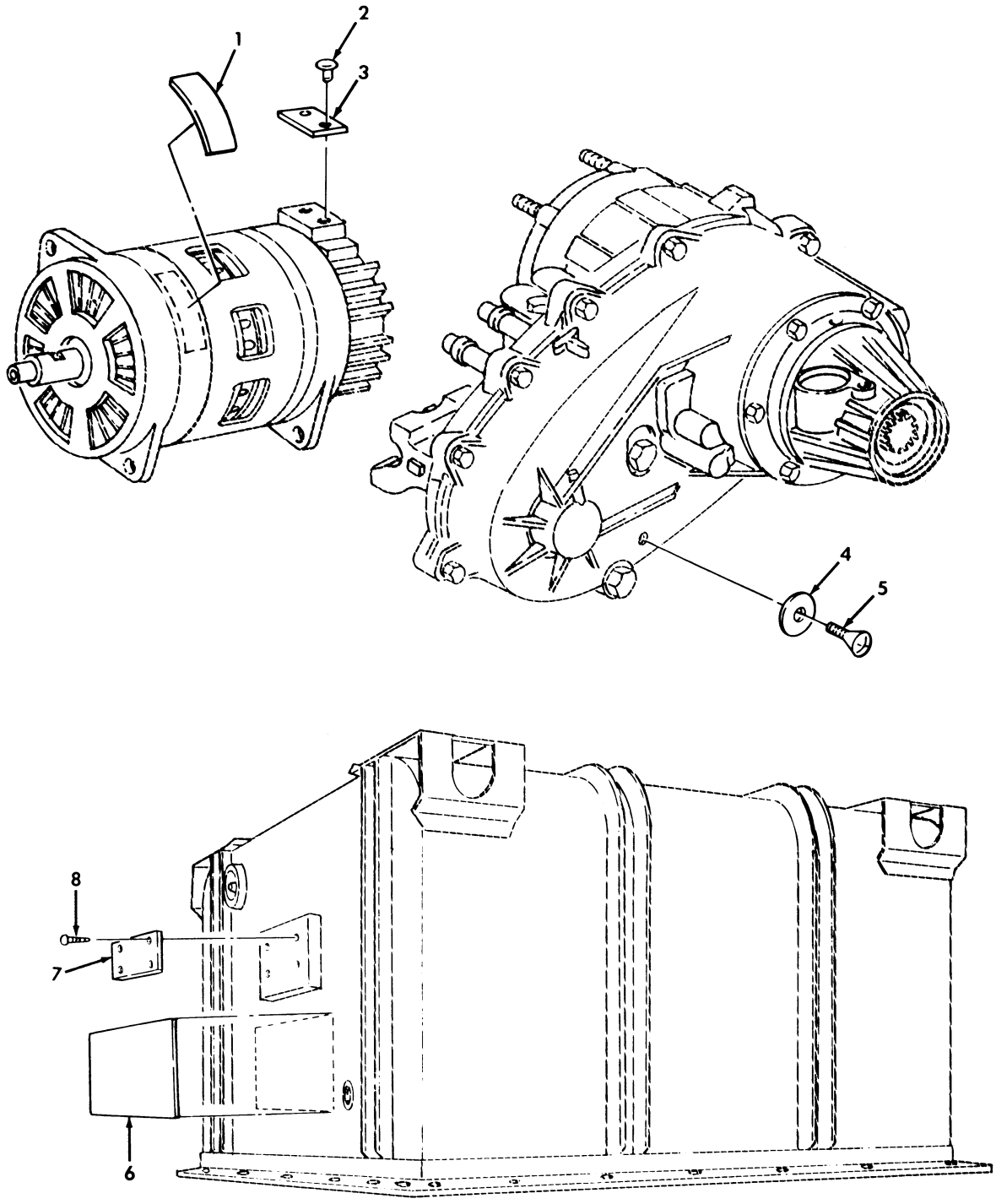

Figure 243. Data Plates, Generator, Transfer Case, and Engine Container.

(1) ITEM NO	(2) SMR CODE	(3) NSN	(4) CAGEC	(5) PART NUMBER	(6) DESCRIPTION AND USABLE ON CODES(UOC)	(7) QTY
					GROUP 2210 DATA PLATES AND INSTRUCTION HOLDERS	
					FIG. 243 DATA PLATES,GENERATOR, TRANSFER CASE,AND ENGINE CONTAINER	
1	PAOZZ	7690011975500	19207	12339064	DECAL FAN SHROUD.....	1
2	PAOZZ	5320009572500	96906	MS20604B4W1	RIVET,BLIND 1/8 DIA.,.015-.062 GRIP	2
3	PFOZZ	9905011819456	19207	11630585	PLATE,INSTRUCTION GENERATOR.....	1
4	PFOZZ	9905011587981	34623	5741083	PLATE,IDENTIFICATIO TRANSFER CASE..	1
5	PAOZZ	5305012117415	34623	5741084	SCREW,CAP,HEXAGON H #10-32 X 1/4...	1
* 6	PAOZZ	7690014844111	19207	12338072-1	DECAL ENGINE CONTAINER.....	1
7	PAOZZ	9905009012942	19207	7973326	PLATE,IDENTIFICATIO ENGINE CONTAINER.....	1
8	PAOZZ	5305002535627	80205	MS21318-48	SCREW,DRIVE #10-8 X 5/8.....	4

END OF FIGURE

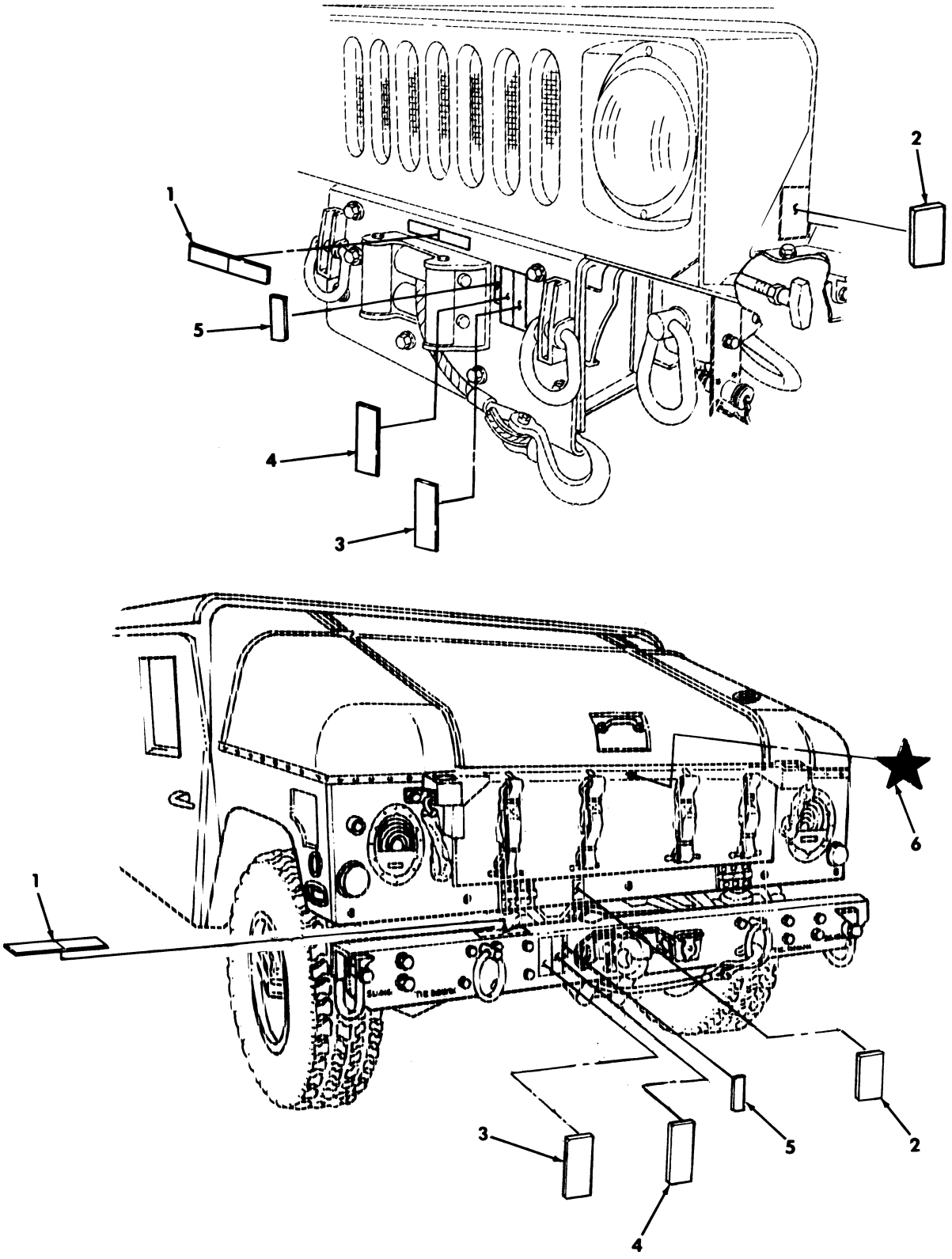

Figure 244. Data Plates, Winch.

(1) ITEM NO	(2) SMR CODE	(3) NSN	(4) CAGEC	(5) PART NUMBER	(6) DESCRIPTION AND USABLE ON CODES(UOC)	(7) QTY
					GROUP 2210 DATA PLATES AND INSTRUCTION HOLDERS	
					FIG. 244 DATA PLATES,WINCH	
1	PAOZZ	7690014734532	34623	RCSK17624	DECAL.....	1
2	PAOZZ	7690014736602	27646	28100	MARKER,IDENTIFICATI CLUTCH.....	1
3	PAOZZ	7690014732758	27646	28638	MARKER,IDENTIFICATI MIL-9000 WINCH.	1
4	PAOZZ	7690014441355	27646	34552	LABEL CLUTCH LEVER.....	1
5	PAOZZ	7690014692566	27646	30331	LABEL ROTATION.....	1
* 6	PFOZZ	7690014331610	34623	12469441	DECAL..... UOC:XBB	1

END OF FIGURE

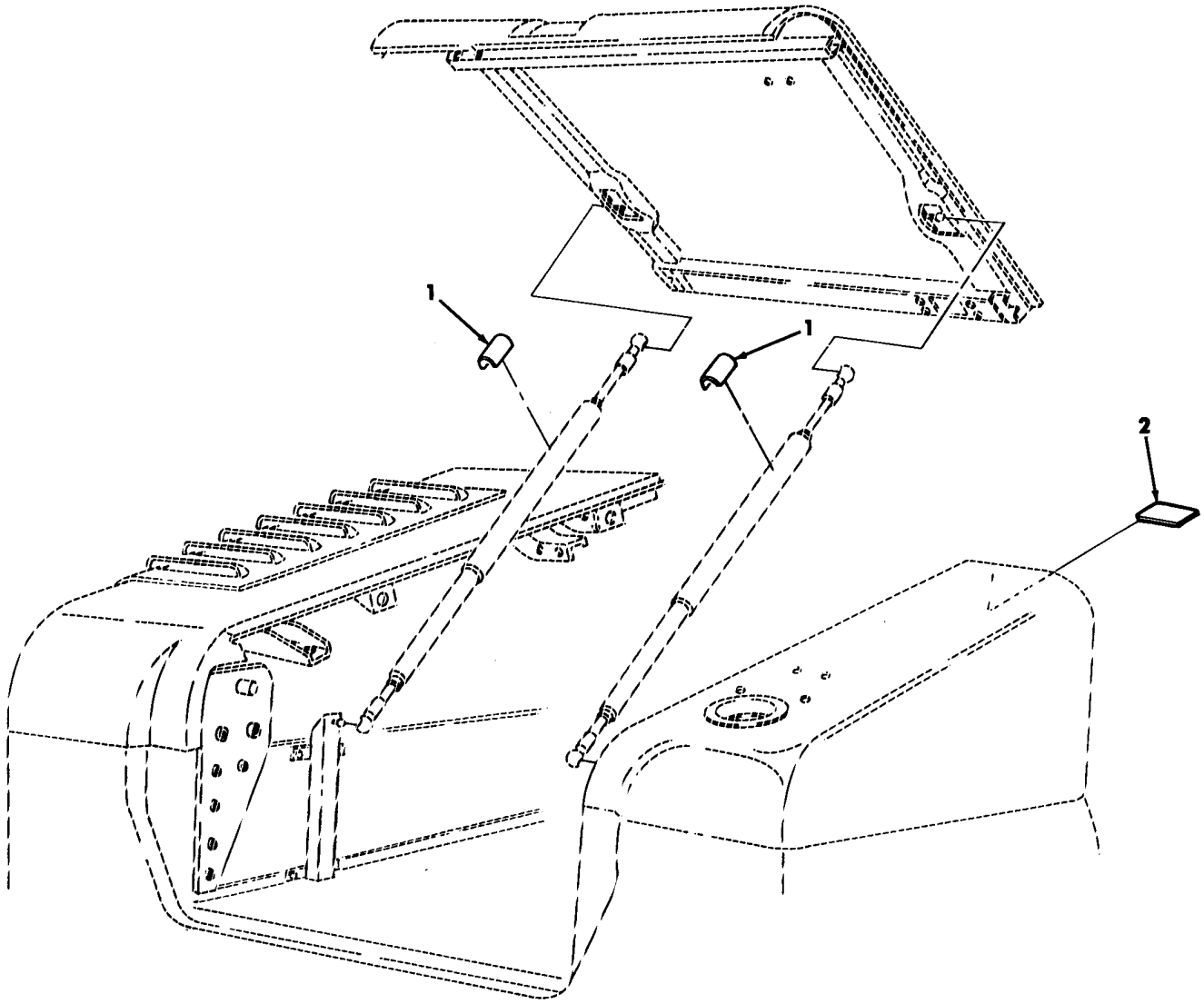

Figure 245. Data Plates, Rear Hatch.

(1) ITEM NO	(2) SMR CODE	(3) NSN	(4) CAGEC	(5) PART NUMBER	(6) DESCRIPTION AND USABLE ON CODES(UOC)	(7) QTY
					GROUP 2210 DATA PLATES AND INSTRUCTION HOLDERS	
					FIG. 245 DATA PLATES,REAR HATCH	
1	PAOZZ	7690012047785	19207	12340814	DECAL NO HAND HOLD..... UOC:XBB	2
2	PAOZZ	7690011908501	19207	12340904	MARKER,IDENTIFICATI CBR OVER GARMENTS..... UOC:XBB	2

END OF FIGURE

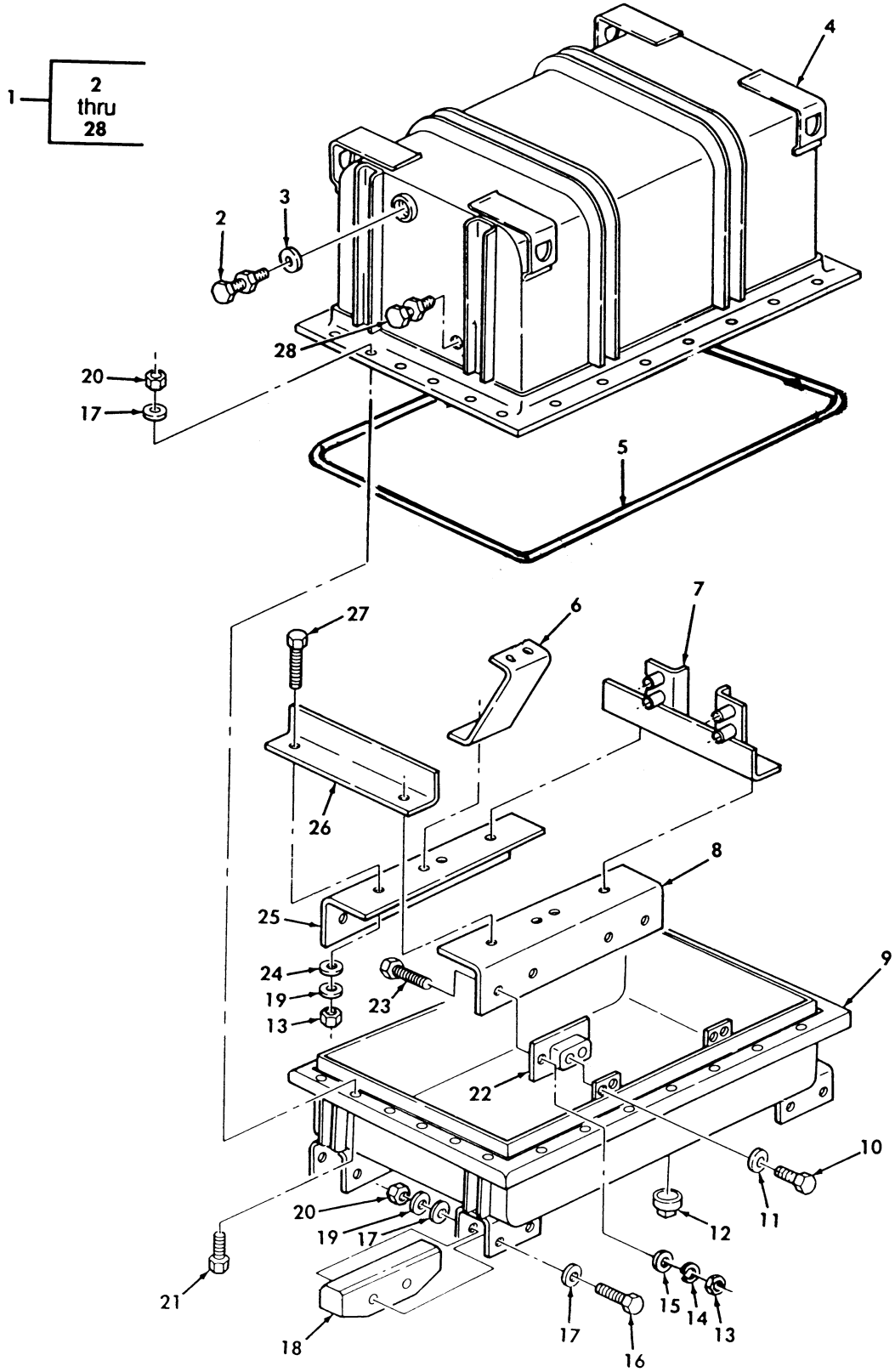

Figure 246. Engine Shipping Container Assembly.

(1) ITEM NO	(2) SMR CODE	(3) NSN	(4) CAGEC	(5) PART NUMBER	(6) DESCRIPTION AND USABLE ON CODES(UOC)	(7) QTY
					GROUP 33 SPECIAL PURPOSE KITS	
					3301 REUSABLE SHIPPING CONTAINER	
					FIG. 246 ENGINE SHIPPING CONTAINER ASSEMBLY	
1	PFFFF	8145012313747	19207	12338064	SHIPPING AND STORAG CONTAINER, ENGINE.....	1
2	PAFZZ	2520012681051	19207	12338078	.BREATHER.....	1
3	PAFZZ	4820010052994	01347	330-10-10R	.VALVE,PRESSURE EQUA.....	1
4	XAFZZ		19207	12338066	.CONTAINER,UPPER.....	1
5	PAFZZ	5330012646537	19207	12338073	.RUBBER ROUND SECTIO CONTAINER ASSEMBLY.....	1
6	PFFZZ	5340012646544	19207	12338068	.BRACKET,DOUBLE ANGL ENGINE SUPPORT	2
7	PFFZZ	5340012713059	19207	12338067	.BRACKET,MOUNTING ENGINE SUPPORT...	1
8	PFFZZ	5340012646540	19207	12338074	.BRACKET,ANGLE LEFT.....	1
9	XAFZZ		19207	12338065	.CONTAINER,LOWER.....	1
10	PAFZZ	5305002693233	80204	B1821BH038F063N	.SCREW,CAP,HEXAGON H 3/8-24 X 5/8..	8
11	PAFZZ	5310006379541	96906	MS35338-46	.WASHER,LOCK 3/8.....	8
12	PAFZZ	4730002212140	96906	MS20913-6S	.PLUG,PIPE 3/4-14.....	1
13	PAFZZ	5310008807744	96906	MS51967-5	.NUT,PLAIN,HEXAGON 5/16-18.....	16
14	PAFZZ	5310004079566	96906	MS35338-45	.WASHER,LOCK 5/16.....	8
15	PAFZZ	5310000814219	96906	MS27183-12	.WASHER,FLAT 11/32.....	8
16	PAFZZ	5305000712083	80204	B1821BH050C500N	.SCREW,CAP,HEXAGON H 1/2-13 X 5.00.	8
17	PAFZZ	5310008095998	96906	MS27183-18	.WASHER,FLAT 17/32.....	42
18	PAFZZ	5340012653676	19207	12338071	.RUNNER,METAL.....	4
19	PAFZZ	5310005845272	96906	MS35338-48	.WASHER,LOCK 1/2.....	16
20	PAFZZ	5310007680318	21439	01857-007	.NUT,PLAIN,HEXAGON 1/2-13.....	34
21	PAFZZ	5305007320511	80204	B1821BH050C113N	.SCREW,CAP,HEXAGON H 1/2-13 X 1-1/8	26
22	PFFZZ	5342012646543	19207	12338070	.MOUNT,RESILIENT.....	4
23	PAFZZ	5306002264828	80204	B1821BH031C113N	.BOLT,MACHINE 5/16-18 X 1-1/8.....	8
24	PAFZZ	5310008093079	96906	MS27183-19	.WASHER,FLAT 9/16.....	8
25	PFFZZ	5340012646541	19207	12338075	.BRACKET,ANGLE.....	1
26	PFFZZ	5340012653674	19207	12338076	.BRACKET,ANGLE.....	1
27	PAFZZ	5305000712069	80204	B1821BH050C150N	.SCREW,CAP,HEXAGON H 1/2-13 X 1-1/2	8
28	PAFZZ	6685006181822	00334	SK2155	.INDICATOR,HUMIDITY.....	1

END OF FIGURE

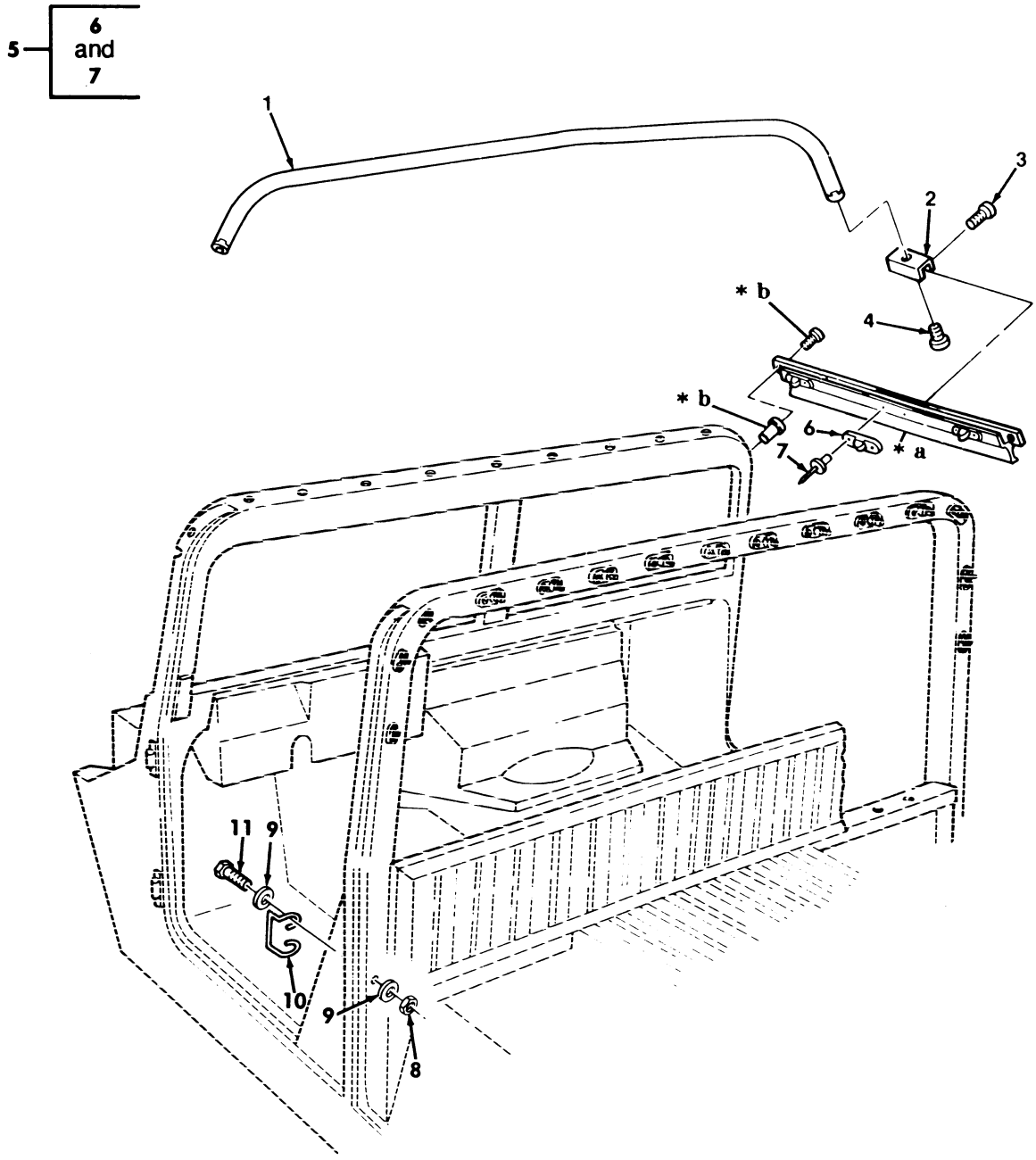

* a PART OF ITEM 5
* b SEE FIGURE 212

Figure 247. Arctic Kit, Two-Man Crew, Bow and Mounting Components.

(1) ITEM NO	(2) SMR CODE	(3) NSN	(4) CAGEC	(5) PART NUMBER	(6) DESCRIPTION AND USABLE ON CODES(UOC)	(7) QTY
					GROUP 3303 SPECIAL PURPOSE KITS	
					FIG. 247 ARCTIC KIT,TWO-MAN CREW,BOW AND MOUNTING COMPONENTS	
1	PAOZZ	2540012064115	19207	12340713	BOW,VEHICULAR TOP PART OF KIT P/N 57K0137 PART OF KIT P/N 5705691..... UOC:XAA	1
2	PFOZZ	5340012043862	19207	12340239	STRAP,RETAINING PART OF KIT P/N 57K0137..... UOC:XAA	2
3	PAOZZ	5305000593659	96906	MS51958-63	SCREW,MACHINE #10-32 X 1/2. PART OF KIT P/N 57K0137..... UOC:XAA	4
4	PAOZZ	5305000711313	96906	MS51957-77	SCREW,MACHINE 1/4-20 X 3/8. PART OF KIT P/N 57K0137..... UOC:XAA	2
5	PFOZZ	2590011982895	34623	5581371	HANDRAIL,VEHICULAR L.H. PART OF KIT P/N 57K0137..... UOC:XAA	1
5	PFOZZ	2590011974898	34623	5581372	HANDRAIL,VEHICULAR R.H. PART OF KIT P/N 57K0137..... UOC:XAA	1
6	PAOZZ	5325008235999	13940	XB78323-05001	.STUD,TURNBUTTON FAS..... UOC:XAA	3
7	PAOZZ	5320000835009	81349	M24243/1-A403	.RIVET,BLIND 1/8 DIA.,.126-.187 GRIP..... UOC:XAA	6
* 8	PAOZZ	5310002416658	81349	M45913/3-5FG8C	NUT,SELF-LOCKING-HE 5/16-24 PART OF UOC:XAA	4
9	PAOZZ	5310004079566	96906	MS35338-45	WASHER,LOCK 5/16 PART OF KIT P/N 57K0137..... UOC:XAA	8
10	PAOZZ	5340012070717	19207	12339187	BUCKLE PART OF KIT P/N 57K0137..... UOC:XAA	2
11	PAOZZ	5306000182027	19207	7346712	BOLT,MACHINE 5/16-24 PART OF KIT P/N 57K0137..... UOC:XAA	4

END OF FIGURE

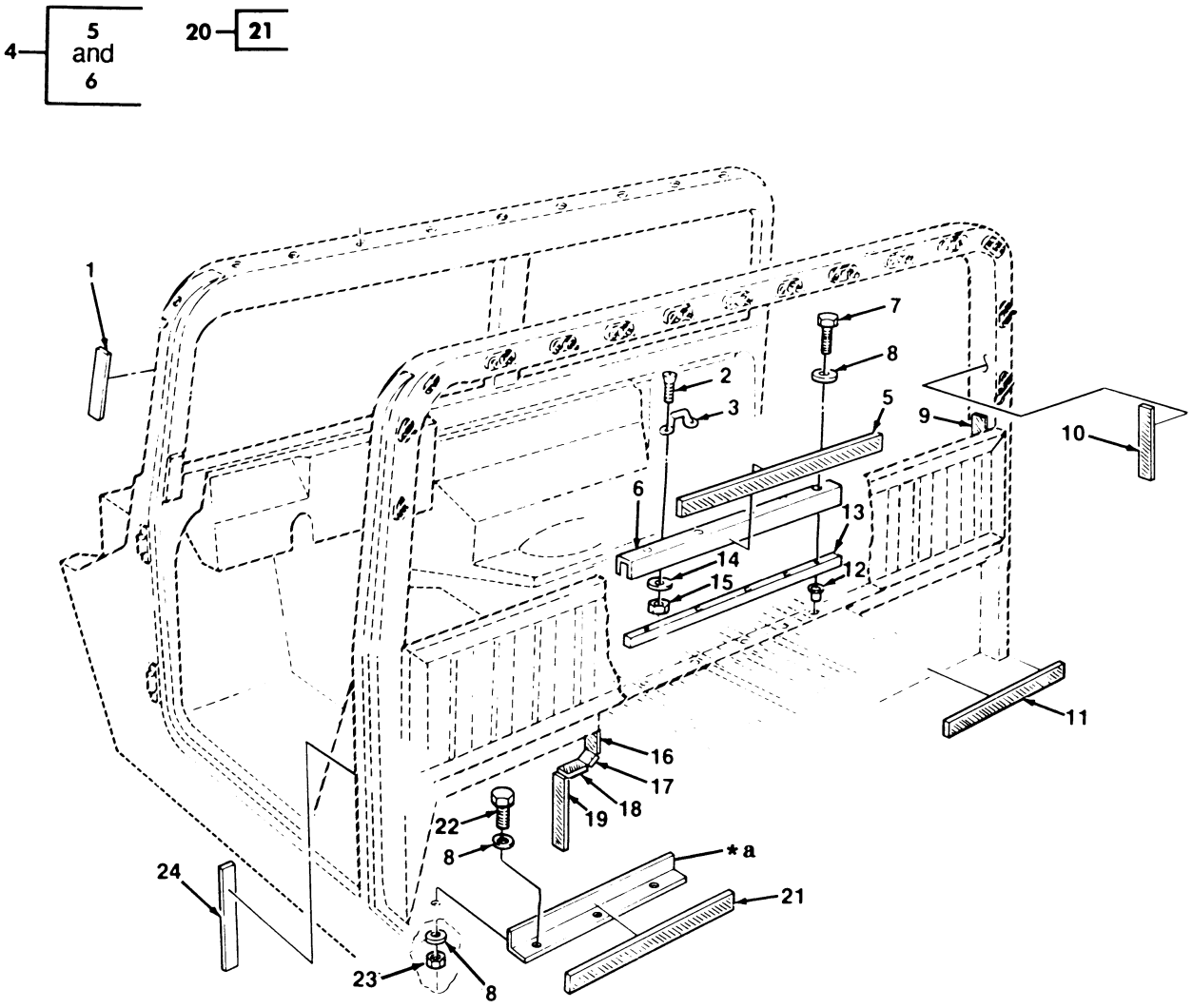

* a PART OF ITEM 20

Figure 248. Arctic Kit, Two-Man Crew, Curtain Fasteners.

(1) ITEM NO	(2) SMR CODE	(3) NSN	(4) CAGEC	(5) PART NUMBER	(6) DESCRIPTION AND USABLE ON CODES(UOC)	(7) QTY
					GROUP 3303 SPECIAL PURPOSE KITS	
					FIG. 248 ARCTIC KIT,TWO-MAN CREW, CURTIAN FASTENERS	
1	MOOZZ		34623	5589275	INSUSLATION,FOAM MAKE FROM PLATIC STRIP,P/N 5741221,12 INCHES LONG PART OF KIT P/N 57K0137..... UOC:XAA	2
2	PAOZZ	5305000888332	80205	MS35190-272	SCREW,MACHINE #10-24 X 5/8 PART OF KIT P/N 57K0137..... UOC:XAA	4
3	PAOZZ	5340011978673	19207	12338839-4	HANDLE,BOW PART OF KIT P/N 57K0137. UOC:XAA	2
4	PFOZA	5340014665243	19207	12340708	BRACKET,DOUBLE ANGL PART OF KIT P/N 57K0137..... UOC:XAA	1
* 5	MOOZZ		19207	12340700-12	.FASTENER,TAPE HOOK MAKE FROM FASTENER,TAPE HOOK P/N 11459081 31.75 INCHES LONG..... UOC:XAA	1
6	XAOZZ		19207	12340708-1	.CHANNEL..... UOC:XAA	1
7	PAOZZ	5306012077487	7X677	9422042	BOLT,MACHINE 5/16-18 X 2.00 PART OF KIT P/N 57K0137..... UOC:XAA	4
8	PAOZZ	5310011191024	24617	2436162	WASHER,FLAT 5/16 PART OF KIT P/N 57K0137..... UOC:XAA	10
* 9	MOOZZ		19207	12340700-7	TAPE,FASTENER,HOOK MAKE FROM TAPE FASTENER,TAPE HOOK P/N 11459081 6.50 INCHES LONG PART OF KIT P/N 57K0137..... UOC:XAA	2
* 10	MOOZZ		19207	12340700-11	FASTENER,TAPE HOOK MAKE FROM FASTENER,TAPE HOOK P/N 11459081 19.5 INCHES LONG PART OF KIT P/N 57K0137..... UOC:XAA	4
* 11	MOOZZ		19207	12340700-10	FASTENER,TAPE HOOK MAKE FROM FASTENER,TAPE HOOK P/N 11459081 24 INCHES LONG PART OF KIT P/N 57K0137..... UOC:XAA	2
12	PAOZZ	5310009523567	03481	A31-125	NUT,PLAIN,BLIND RIV 5/16-18 PART OF KIT P/N 57K0137..... UOC:XAA	4
13	PAOZZ	9330011975458	34623	5589086	PLASTIC MATERIAL,CE PART OF KIT P/N 57K0137..... UOC:XAA	1
14	PAOZZ	5310000145850	96906	MS27183-42	WASHER,FLAT #10 PART OF KIT P/N 57K0137..... UOC:XAA	4
15	PAOZZ	5310011870678	7X677	116000	NUT,PLAIN,HEXAGON #10-24 PART OF	4

(1) ITEM NO	(2) SMR CODE	(3) NSN	(4) CAGEC	(5) PART NUMBER	(6) DESCRIPTION AND USABLE ON CODES(UOC)	(7) QTY
					KIT P/N 57K0137..... UOC:XAA	
* 16	MOOZZ		19207	12340700-4	FASTENER,TAPE HOOK L.H. MAKE FROM FASTENER,TAPE HOOK P/N 11459081 5.31 INCHES LONG PART OF KIT P/N 57K0137..... UOC:XAA	1
* 17	MOOZZ		19207	12340700-1	FASTENER,TAPE HOOK MAKE FROM FASTENER,TAPE HOOK P/N 11459081 1.88 INCHES LONG PART OF KIT P/N 57K0137..... UOC:XAA	2
* 18	MOOZZ		34623	12340700-2	FASTENER,TAPE HOOK R.H. MAKE FROM FASTENER,TAP HOOK P/N 11459081 3.12 INCHES LONG PART OF KIT P/N 57K0137..... UOC:XAA	1
* 18	MOOZZ		34623	12340700-3	FASTENER,TAPE HOOK L.H. MAKE FROM FASTENER,TAPE HOOK P/N 11459081 3.19 INCHES LONG PART OF KIT P/N 57K0137..... UOC:XAA	1
* 19	MOOZZ		34623	5590613	FASTENER,TAPE HOOK MAKE FROM FASTENER,TAPE HOOK P/N 11459081,8.5 INCHES LONG PART OF KIT P/N 57K0137. UOC:XAA	2
20	PFOZZ	2540011975463	34623	5590630	BRACE,ARCTIC CURTAIN PART OF KIT P/N 57K0137..... UOC:XAA	1
* 21	MOOZZ		19207	12340700-8	.FASTENER,TAPE HOOK MAKE FROM FASTENER,TAPE HOOK P/N 11459081,19 INCHES LONG..... UOC:XAA	1
22	PAOZZ	5306002264828	80204	B1821BH031C113N	BOLT,MACHINE 5/16-18 X 1.125 PART OF KIT P/N 57K0137..... UOC:XAA	3
23	PAOZZ	5310012085252	34623	5590566	NUT,SELF-LOCKING,HE 5/16-18 PART OF KIT P/N 57K0137..... UOC:XAA	3
* 24	MOOZZ		19207	12340700-11	TAPE,FASTENER HOOK MAKE FROM FASTENER,TAPE HOOK,P/N 11459081,24 INCHES LONG PART OF KIT P/N 57K0137. UOC:XAA	2

END OF FIGURE

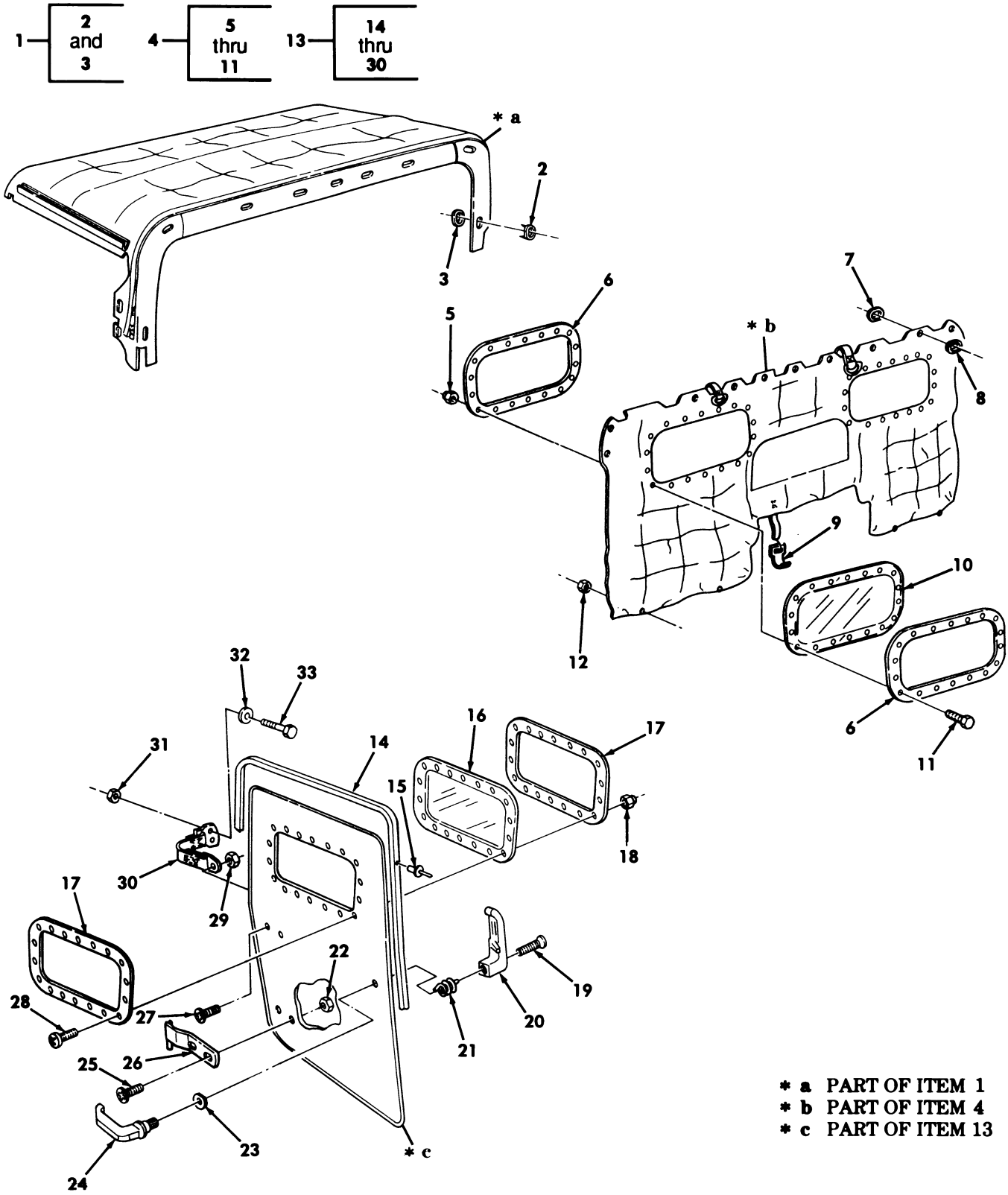

Figure 249. Arctic Kit, Two-Man Crew, Top Curtain, Rear Curtain, and Door Assemblies.

(1) ITEM NO	(2) SMR CODE	(3) NSN	(4) CAGEC	(5) PART NUMBER	(6) DESCRIPTION AND USABLE ON CODES(UOC)	(7) QTY
					GROUP 3303 WINTERIZATION KITS	
					FIG. 249 ARTIC KIT,TWO-MAN CREW,TOP CURTAIN,REAR CURTAIN,AND DOOR ASSEMBLIES	
1	PAOFF	2540013958785	34623	12342441	COVER,FITTED,VEHICU PART OF KIT P/N 57K0137..... UOC:XAA	1
* 2	PAFZZ	5325003718108	13940	BS78505	.CLINCH PLATE,TURNBU..... UOC:XAA	8
3	PAFZZ	5325002818643	21450	426687	.SOCKET,TURNBUTTON F..... UOC:XAA	8
4	PAOFF	2540011975528	19207	12342442	CURTAIN,VEHICULAR PART OF KIT P/N 57K0137..... UOC:XAA	1
5	PAOZZ	5310010389579	24617	454748	.NUT,SELF-LOCKING,HE #8-32..... UOC:XAA	36
6	PFOZZ	5340011980686	19207	12340710	.PLATE,RETAINING,WIN..... UOC:XAA	4
* 7	PAFZZ	5325003718108	13940	BS78505	.CLINCH PLATE,TURNBU..... UOC:XAA	12
8	PAFZZ	5325002818643	21450	426687	.SOCKET,TURNBUTTON F..... UOC:XAA	12
9	PAFZZ	5340012036542	31272	44702-10	.BUCKLE..... UOC:XAA	2
* 10	PFOZZ	2510018258741	19207	12340608	.WINDOW,VEHICULAR..... UOC:XAA	2
11	PAOZZ	5305008132785	80205	NAS601-12P	.SCREW,MACHINE #8-32 X 3/4..... UOC:XAA	36
12	PAOZZ	5310008140673	96906	MS51943-33	NUT,SELF-LOCKING,HE 5/16-18 PART OF KIT P/N 57K0137..... UOC:XAA	4
13	PAOOO	2510011975546	34623	SF5581723	DOOR,VEHICULAR FRONT,L.H. PART OF KIT P/N 57K0137..... UOC:XAA	1
13	PAOOO	2510011975547	34623	SF5581724	DOOR,VEHICULAR FRONT,R.H. PART OF KIT P/N 57K0137..... UOC:XAA	1
14	PAOZZ	5330013218622	41024	21022103	.SEAL,NONMETALLIC SP..... UOC:XAA	1
15	PAOZZ	5320014428142	96906	MS20604-FL4C4	.RIVET,BLIND..... UOC:XAA	17
16	PFOZZ	2510013258741	19207	12340608	.WINDOW,VEHICULAR..... UOC:XAA	1
17	PFOZZ	5340011980686	19207	12340710	.PLATE,RETAINING,WIN..... UOC:XAA	2
18	PAOZZ	5310010389579	24617	454748	.NUT,SELF-LOCKING,HE #8-32..... UOC:XAA	18
19	PAOZZ	5305011981619	16941	PL25J02P20	.SCREW,MACHINE #10-32 X 1/4..... UOC:XAA	1
20	PAOZZ	2540012037721	19207	12301363-2	.HANDLE,DOOR,VEHICUL INSIDE,R.H.... UOC:XAA	1

(1) ITEM NO	(2) SMR CODE	(3) NSN	(4) CAGEC	(5) PART NUMBER	(6) DESCRIPTION AND USABLE ON CODES(UOC)	(7) QTY
20	PAOZZ	2540012001994	34623	5581320	.HANDLE,DOOR,VEHICUL INSIDE,L.H.... UOC:XAA	1
21	PAOZZ	5360013157212	19207	12356764-1	.SPRING,HELICAL,TORS L.H..... UOC:XAA	1
21	PAOZZ	5360013157211	19207	12356764-2	.SPRING,HELICAL,TORS R.H..... UOC:XAA	1
22	PAOZZ	5310009971888	96906	MS35649-2252	.NUT,PLAIN,HEXAGON 1/4-20..... UOC:XAA	4
23	PAOZZ	5310008093078	96906	MS27183-11	.WASHER,FLAT 1/4..... UOC:XAA	1
24	PAOZZ	2540012001995	19207	12301365	.HANDLE,DOOR,VEHICU OUTSIDE,L.H. AND R.H..... UOC:XAA	2
25	PAOZZ	5305000711315	96906	MS51957-79	.SCREW,MACHINE 1/4-20 X 1/2..... UOC:XAA	3
26	PAOZZ	5340012059021	19207	12340193-1	.LEAF,BUTT HINGE L.H..... UOC:XAA	2
26	PAOZZ	5340012059022	19207	12340193-2	.LEAF,BUTT HINGE R.H..... UOC:XAA	2
27	PAOZZ	5305012067217	16941	PL25D040P8	.SCREW,CAP,SOCKET HE 1/4-20 X 3/4.. UOC:XAA	1
28	PAOZZ	5305008132785	80205	NAS601-12P	.SCREW,MACHINE #8-32 X 3/4..... UOC:XAA	18
29	PAOZZ	5310009971888	96906	MS35649-2252	.NUT,PLAIN,HEXAGON 1/4-20..... UOC:XAA	1
30	PAOZZ	5340011993510	31272	44877	.STRAP,WEBBING..... UOC:XAA	1
31	PAOZZ	5310000614650	96906	MS51943-31	NUT,SELF-LOCKING,HE 1/4-20 PART OF KIT P/N 57K0137..... UOC:XAA	2
32	PAOZZ	5310008094058	96906	MS27183-10	WASHER,FLAT 1/4 PART OF KIT P/N 57K0137..... UOC:XAA	2
33	PAOZZ	5305000712506	80204	B1821BH025C050N	SCREW,CAP,HEXAGON H 1/4-20 X 1/2 PART OF KIT P/N 57K0137..... UOC:XAA	2
KIT	PDOZZ	2540013944454	19207	57K0137	WINTERIZATION KIT,V..... UOC:XAA	1
					BOLT,MACHINE (4) 247-11	
					BOLT,MACHINE (4) 248-7	
					BOLT,MACHINE (3) 248-22	
					BOW,VEHICULAR TOP (1) 247-1	
					BRACE,ARTIC CURTAIN(1) 248-20	
					BRACKET,DOUBLE ANGL(1) 248-4	
					BUCKLE (2) 247-10	
					COVER,FITTED,VEHICU(1) 249-1	
					CURTAIN,VEHICULAR (1) 249-4	
					DOOR,VEHICULAR (1) 249-13	
					DOOR,VEHICULAR (1) 249-13	
					FASTENER,TAPE HOOK (2) 248-10	
					FASTENER,TAPE HOOK (4) 248-11	
					FASTENER,TAPE HOOK (1) 248-16	
					FASTENER,TAPE HOOK (2) 248-17	

(1) ITEM NO	(2) SMR CODE	(3) NSN	(4) CAGEC	(5) PART NUMBER	(6) DESCRIPTION AND USABLE ON CODES(UOC)	(7) QTY
					FASTENER,TAPE HOOK (1) 248-18	
					FASTENER,TAPE HOOK (1) 248-18	
					FASTENER,TAPE HOOK (2) 248-19	
					HANDLE,BOW (2) 248-3	
					HANDRAIL,VEHICULAR (1) 247-5	
					HANDRAIL,VEHICULAR (1) 247-5	
					INSULATION,FOAM (2) 248-1	
					NUT,PLAIN BLIND RIV(4) 2348-12	
					NUT,PLAIN HEXAGON (4) 248-15	
					NUT,SELF-LOCKING,HE(4) 247-8	
					NUT,SELF-LOCKING,HE(3) 248-23	
					NUT,SELF-LOCKING,HE(4) 249-12	
					NUT,SELF-LOCKING,HE(2) 249-31	
					PLASTIC MATERIAL,CE(1) 248-13	
					SCREW,CAP HEXAGON H(2) 249-33	
					SCREW,MACHINE (4) 247-3	
					SCREW,MACHINE (2) 247-4	
					SCREW,MACHINE (4) 248-2	
					STRAP,RETAINING (4) 247-2	
					TAPE,FASTENER,HOOK (2) 248-9	
					TAPE,FASTENER,HOOK (2) 248-24	
					WASHER,FLAT (10) 248-8	
					WASHER,FLAT (4) 248-14	
					WASHER,FLAT (2) 249-32	
					WASHER,LOCK (4) 247-9	

END OF FIGURE

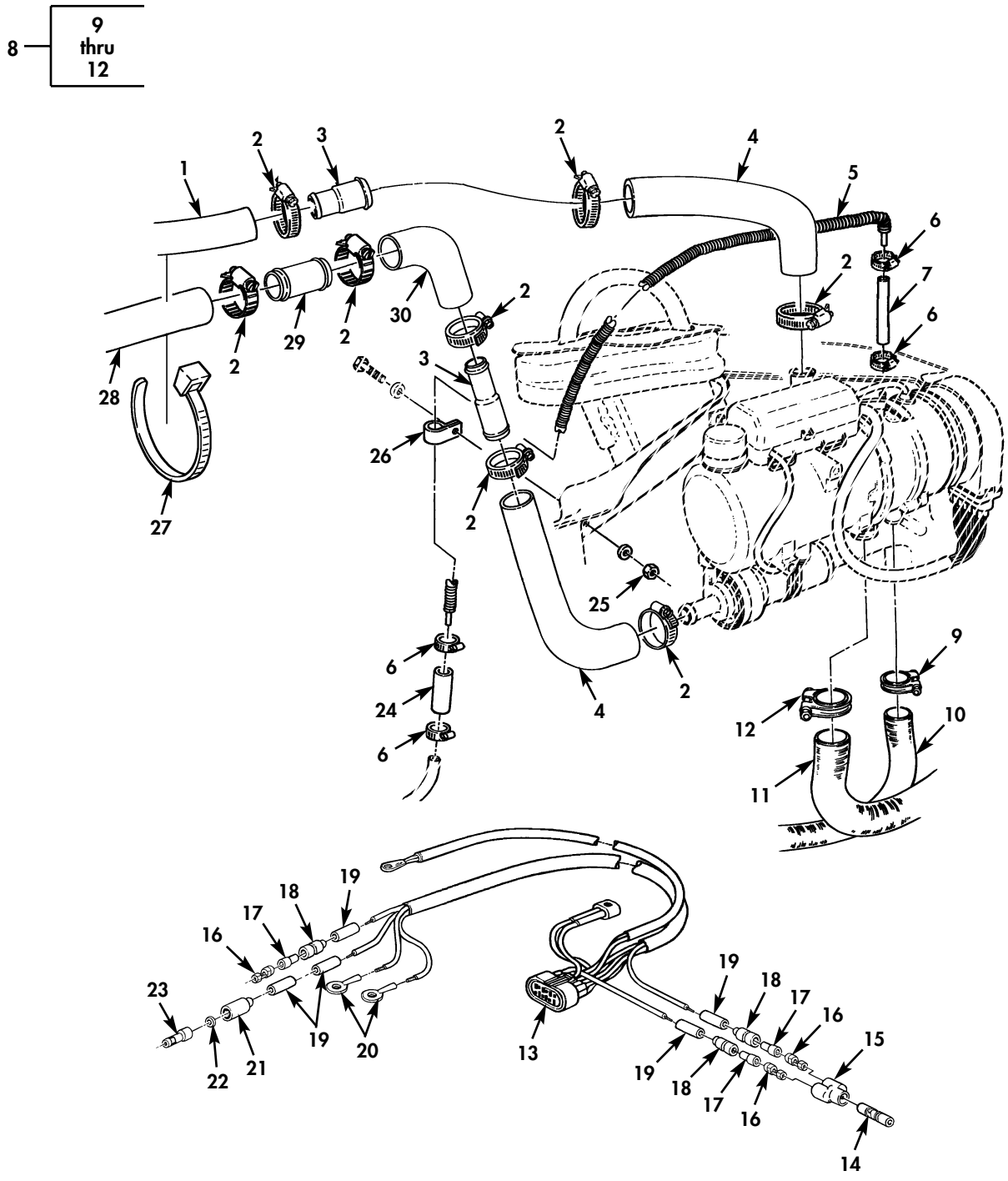

Figure 249A. Engine and Crew Compartment Heater and Related Parts (Sheet 1 of 2).

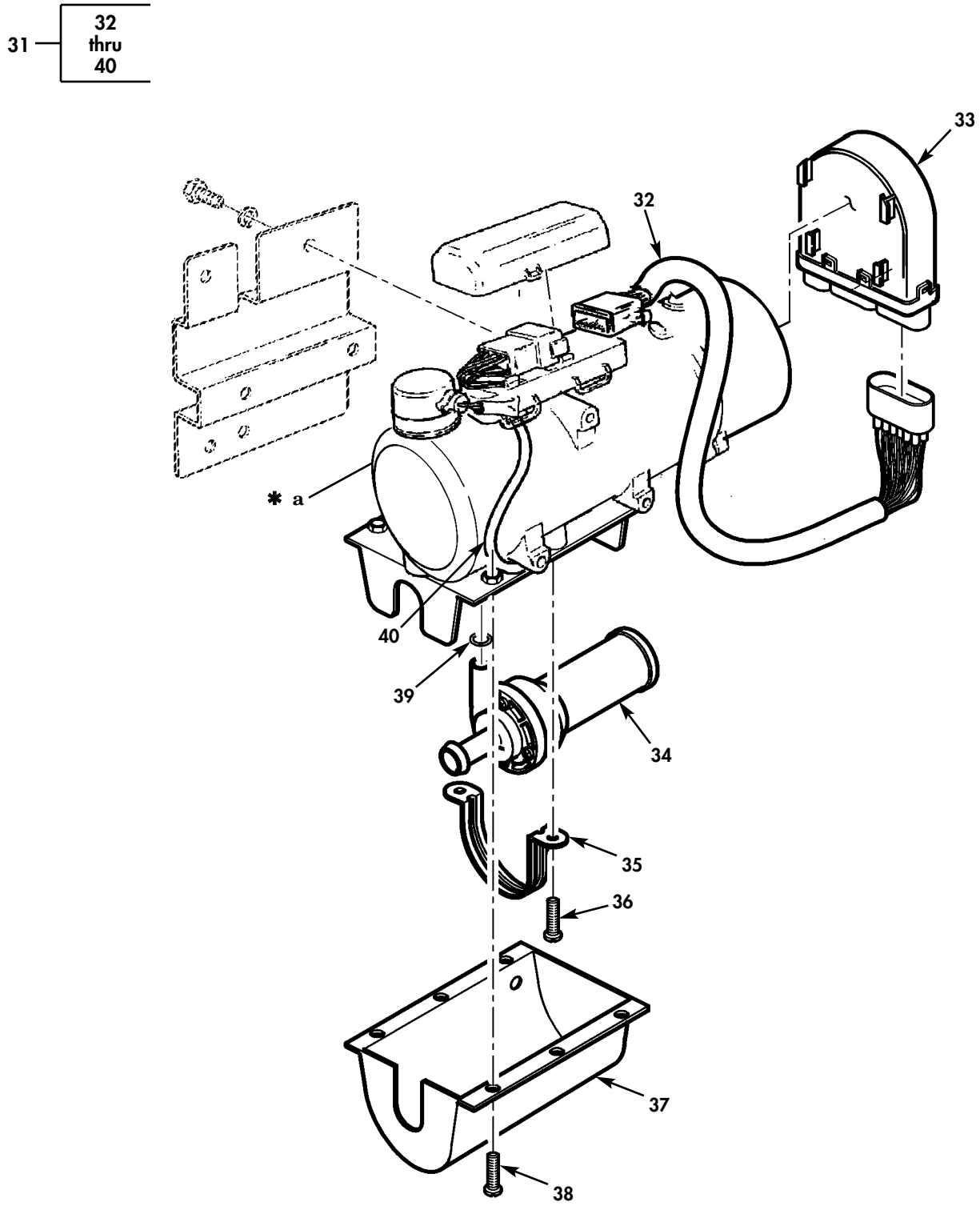

✱ **a** PART OF FIGURE 31

Figure 249A. Engine and Crew Compartment Heater and Related Parts (Sheet 2 of 2).

(1) ITEM NO	(2) SMR CODE	(3) NSN	(4) CAGEC	(5) PART NUMBER	(6) DESCRIPTION AND USABLE ON CODES(UOC)	(7) QTY
					GROUP 3303 SPECIAL PURPOSE KITS	
					FIG. 249A ENGINE AND CREW COMPARTMENT HEATER AND RELATED PARTS	
1	MOOZZ		19207	12339155-3-25	HOSE,NONME MAKE FROM HOSE P/N MS521304B203R 25.0 INCHES LONG PART OF KIT P/N 57K3497.....	1
2	PAOZZ	4730009083194	96906	MS35842-11	CLAMP,HOSE PART OF KIT P/N 57K3497	7
3	PAOZZ	4730014751191	19207	12469041	REDUCER,TUBE PART OF KIT P/N 57K3497.....	2
4	PAOZZ	4720014749105	19207	12339251-1	HOSE,PREFORMED PART OF KIT P/N 57K3497.....	2
5	PAOZZ	4710014751227	19207	12469054	TUBE ASSEMBLY,METAL PART OF KIT P/N 57K3497.....	1
6	PAOZZ	4730011188278	76599	MMF4-SS	CLAMP,HOSE PART OF KIT P/N 57K3497.	4
7	MOOZZ		24617	9436711-2.5	HOSE,NONME MAKE FROM HOSE P/N 9438183 2.50 INCHES LONG PART OF KIT P/N 57K3497.....	1
8	AOOOO		19207	12469058	HEATER ASSEMBLY PART OF KIT P/N 57K3497.....	1
9	PAOZZ	5340012855558	62380	100.424	.CLAMP,LOOP.....	1
10	PAOZZ	4720014752616	24617	5029842A	.PIPE,INTAKE.....	1
11	PAOZZ	2540014766062	24617	5000286A	.PIPE,EXHAUST.....	1
12	PAOZZ	5340014753164	62380	367400	.CLAMP,LOOP.....	1
13	PAOZZ	6150014751843	62380	905782A	.HARNESS,SWITCH.....	1
14	PAOZZ	5935008074109	19207	8741492	ADAPTER,CONNECTOR PART OF KIT P/N 57K3497.....	1
15	PAOZZ	5935009006281	96906	MS27147-1	ADAPTER,CONNECTOR PART OF KIT P/N 57K3497.....	1
16	PAOZZ	5940003996676	19207	8338564	TERMINAL,QUICK SE PART OF KIT P/N 57K3497.....	2
17	PAOZZ	5970008338562	19207	8338562	INSULATOR,BUSHING PART OF KIT P/N 57K3497.....	2
18	PAOZZ	5975006605962	19207	8724494	CABLE,NIPPLE PART OF KIT P/N 57K3497.....	3
* 19	MOOZZ		81343	MS23053/5-107-2	INSULATION SLEEVING MAKE FROM INSULATION SLEEVING P/N MS23053/5-104-0-2,2 INCHES LONG PART OF KIT P/N 57K3497.....	5
* 20	PAOZZ	5940002835280	96906	MS25036-106	TERMINAL,LUG PART OF KIT P/N 57K3497.....	2
* 21	PAOZZ	5935006915591	97403	13207E6498-2	SHELL,ELECTRICAL PART OF KIT P/N 57K3497.....	1
* 22	PAOZZ	5310006560067	19207	8724497	WASHER,SLOTTED PART OF KIT P/N 57K3497.....	1
* 23	PAOZZ	5999009263144	58536	AA52536-3	CONTACT,ELECTRICAL PART OF KIT P/N 57K3497.....	1
* 24	MOOZZ		24617	9436711-2.0	HOSE,NONME MAKE FROM HOSE P/N 9438183,2.00 INCHES LONG,PART OF KIT P/N 57K3497.....	1
* 25	PAOZZ	5310000614650	96906	MS45913/3-4CG8C	NUT,SELF-LOCKING PART OF KIT P/N 57K3497.....	1

(1) ITEM NO	(2) SMR CODE	(3) NSN	(4) CAGEC	(5) PART NUMBER	(6) DESCRIPTION AND USABLE ON CODES(UOC)	(7) QTY
* 26	PAOZZ	5340009936207	96906	MS21333-99	CLAMP,LOOP PART OF KIT P/N 57K3497..	1
* 27	PAOZZ	5975010345871	96906	MS3367-7-0	STRAP,TIEDOWN ELEC PART OF KIT P/N 57K3497.....	5
* 28	MOOZZ		19207	12339155-3-15	HOSE,NONME MAKE FROM HOSE P/N MS521304B203R,15.0 INCHES LONG PART OF KIT P/N 57K3497.....	1
* 29	PAOZZ	4730013948129	96906	MS24520-7	MENDER,HOSE PART OF KIT P/N 57K3497	1
* 30	PAOZZ	4720011892218	19207	12339251	HOSE,PREFORMED PART OF KIT P/N 57K3497.....	1
* 31	PAOOO	2540015012690	62380	67582C	HEATER,VEHUCULAR,CO.....	1
* 32	PAOZZ	5999014750215	62380	67134A	.HARNESS,ELECTRICAL.....	1
* 33	PAOZZ	2540014753944	62380	89093B	.CONTROL BOX,ELECTRI.....	1
* 34	PAOZZ	2930014753976	62380	65759B	.PUMP,COOLING SYSTEM.....	1
* 35	PAOZZ	5340014753171	62380	38634A	.STRAP,RETAINING.....	1
* 36	PAOZZ	5305014753402	62380	35283A	.SCREW,TAPPING.....	2
* 37	PAOZZ		62380	82463A	.SHIELD,FUEL PUMP.....	1
* 38	PAOZZ		62380	147818	.SCREW,MACHINE.....	6
* 39	PAOZZ		62380	22405A	.O-RING.....	1
* 40	PAOZZ	5999014763674	62380	67133A	.HARNESS,ELECTRICAL E.....	1

END OF FIGURE

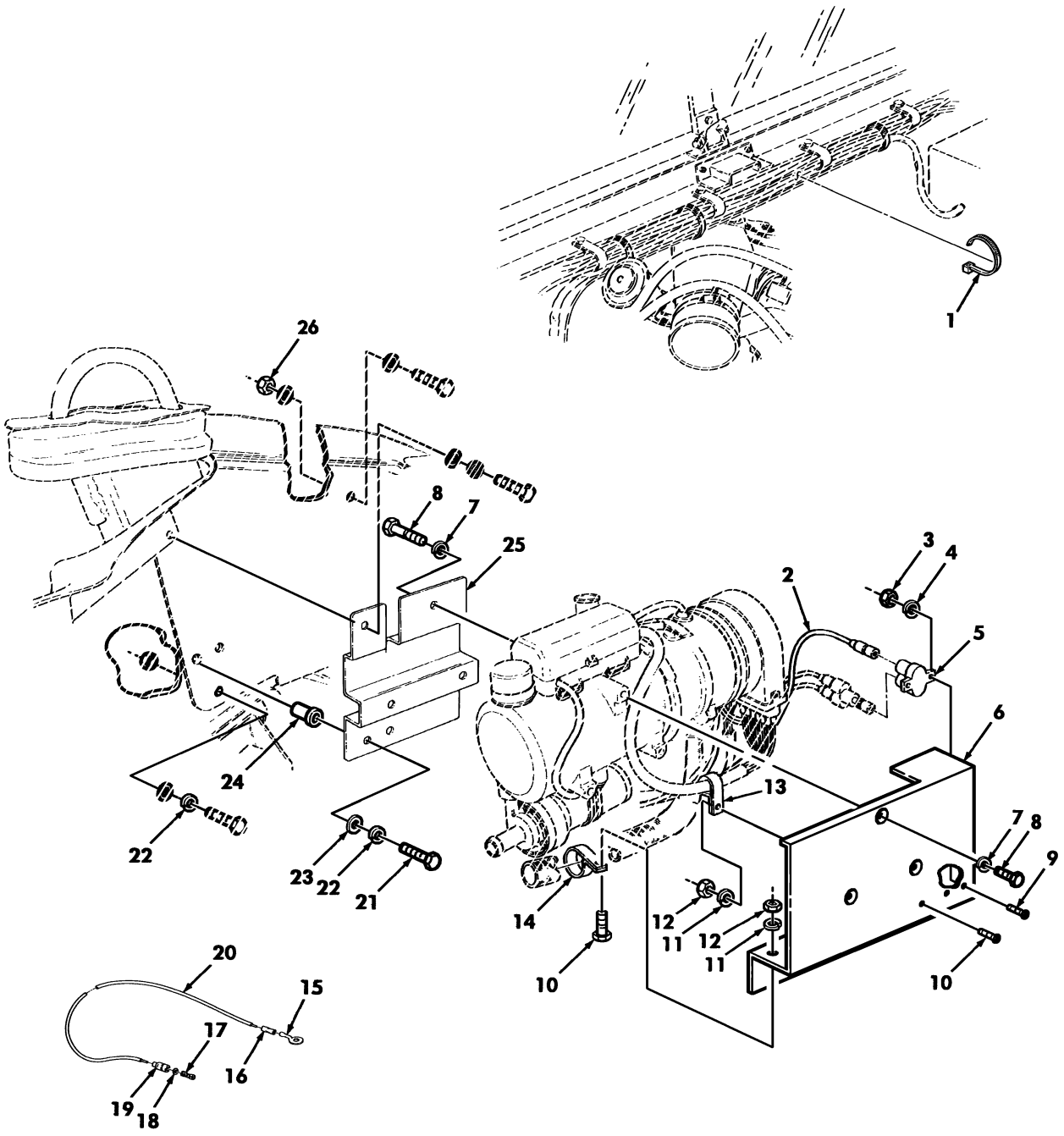

Figure 249B. Engine and Crew Compartment Heater Support Bracket, Heat Shield, and Mounting Hardware.

(1) ITEM NO	(2) SMR CODE	(3) NSN	(4) CAGEC	(5) PART NUMBER	(6) DESCRIPTION AND USABLE ON CODES(UOC)	(7) QTY
					GROUP 3303 SPECIAL PURPOSE KITS	
					FIG. 249B ENGINE AND CREW COMPARTMENT HEATER SUPPORT BRACKET,HEAT SHIELD, AND MOUNTING HARDWARE	
* 1	PAOZZ	5975009846582	96906	MS3367-1-0	STRAP,TIEDOWN ELEC PART OF KIT P/N 57K3497.....	4
* 2	PAOZZ	6145007056678	81349	M13486-1-7	WIRE,ELECTRICAL PART OF KIT P/N 57K3497.....	1
* 3	PAOZZ	5310014741368	34623	114653	NUT,PLAIN HEXAGON PART OF KIT P/N 57K3497.....	2
* 4	PAOZZ	5310000453299	96906	MS35338-42	WASHER,LOCK PART OF KIT P/N 57K3497	2
* 5	PAOZZ	5925014302318	58536	AA5571/01-001	BREAKER,CIRCUIT PART OF KIT P/N 57K3497.....	1
* 6	PAOZZ	2990014739420	19207	12460427	GUARD,MUFFLER EXHAU PART OF KIT P/N 57K3497.....	1
* 7	PAOZZ	5310014785620	80204	B1821HRCZ080	WASHER,LOCK PART OF KIT P/N 57K3497	6
* 8	PAOZZ	5305011491938	7X677	11500815	SCREW,CAP HEXAGON H PART OF KIT P/N 57K3497.....	6
* 9	PAOZZ	5305009846197	96906	MS35206-249	SCREW,MACHINE PART OF KIT P/N 57K3497.....	2
* 10	PAOZZ	5305009846210	96906	MS35206-263	SCREW,MACHINE PART OF KIT P/N 57K3497.....	2
* 11	PAOZZ	5310000453296	96906	MS35338-43	WASHER,LOCK PART OF KIT P/N 57K3497.....	2
* 12	PAOZZ	5310014222147	24617	116003	NUT,PLAIN HEXAGON PART OF KIT P/N 57K3497.....	2
* 13	PAOZZ	5340007247038	96906	MS21333-76	CLAMP,LOOP PART OF KIT P/N 57K3497.	1
* 14	PAOZZ	5340001773711	80205	MS21333-16	CLAMP,LOOP PART OF KIT P/N 57K3497.	1
* 15	PAOZZ		96906	MS25306-158	TERMINAL,LUG PART OF KIT P/N 57K3497.....	1
* 16	PAOZZ	5970008122969	96906	BEMS6001-14BLACK	INSULATION,SLEEVING PART OF KIT P/N 57K3497.....	1
* 17	PAOZZ	5940003996676	19207	8338564	TERMINAL,SET QUICK PART OF KIT P/N 57K3497.....	1
* 18	PAOZZ	5310002988903	19207	8338570	WASHER,FLAT PART OF KIT P/N 57K3497	1
* 19	PAOZZ	2590006959076	77060	5297084	SHELL,HEAD LIGHT PART OF KIT P/N 57K3497.....	1
* 20	PAOZZ	6145007056678	81349	M13486-1-7	WIRE,ELECTRICAL PART OF KIT P/N 57K3497.....	1
* 21	PAOZZ	5306002264829	80204	B1821BH031C125N	BOLT,MACHINE PART OF KIT P/N 57K3497.....	2
* 22	PAOZZ	5310004079566	96906	MS35338-45	WASHER,LOCK PART OF KIT P/N 57K3497.....	3
* 23	PAOZZ	5310000814219	96906	MS27183-12	WASHER,FLAT PART OF KIT P/N 57K3497	2
* 24	PAOZZ	5325014608350	19207	12446871-10	INSERT,THREADED PART OF KIT P/N 57K3497.....	2
* 25	PAOZZ	5340014736897	19207	12460430	BRACKET,MULTIPLE AN PART OF KIT P/N 57K3497.....	1
* 26	PAOZZ	5310008140673	96906	MS51943-33	NUT,SELF-LOCKING PART OF KIT P/N 57K3497.....	2

END OF FIGURE

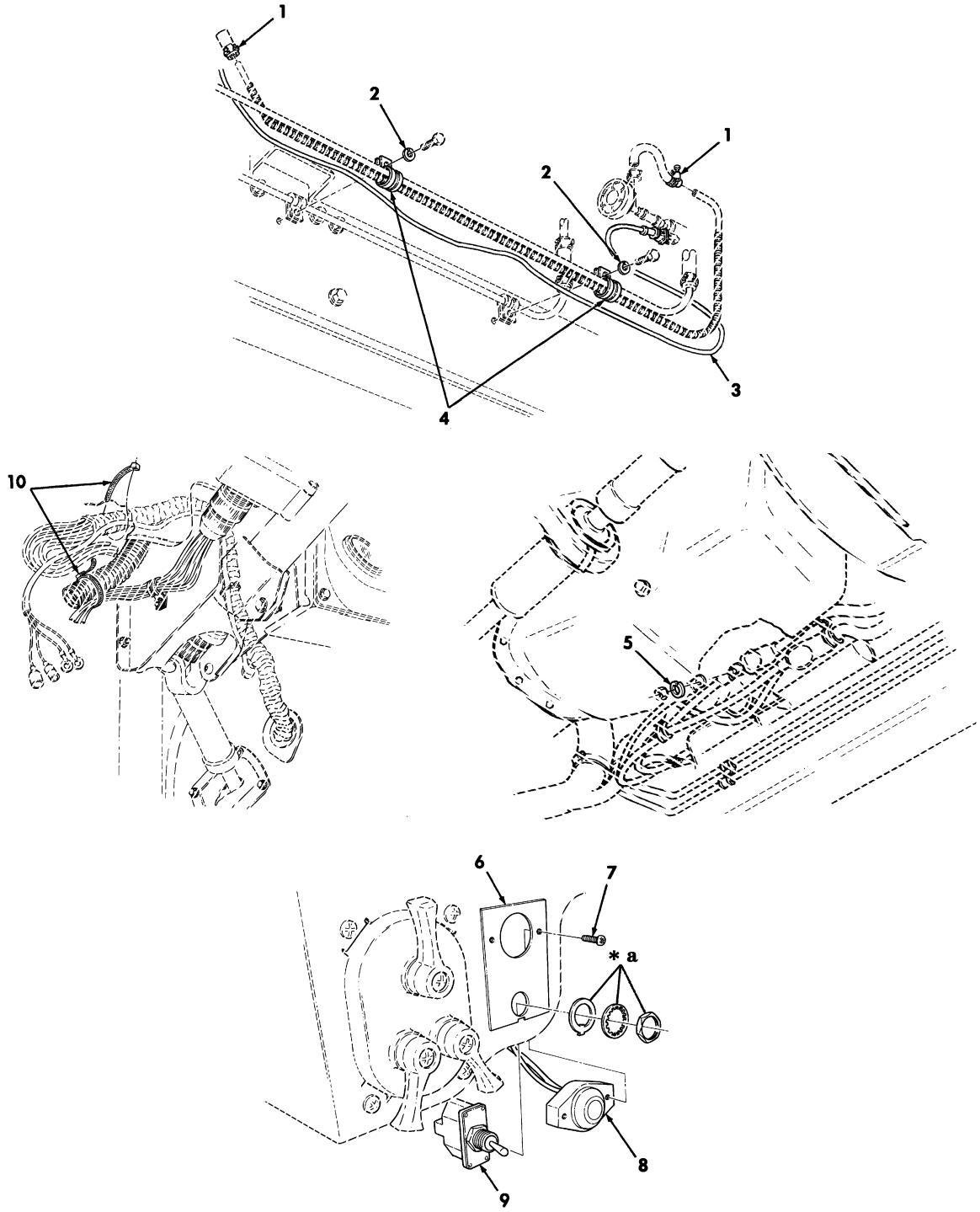

✱ **a** PART OF ITEM 9

Figure 249C. Engine and Crew Compartment Heater Switch, Fuel Lines, and Mounting Hardware.

(1) ITEM NO	(2) SMR CODE	(3) NSN	(4) CAGEC	(5) PART NUMBER	(6) DESCRIPTION AND USABLE ON CODES(UOC)	(7) QTY
					GROUP 3303 SPECIAL PURPOSE KITS	
					FIG. 249C ENGINE AND CREW COMPARTMENT HEATER SWITCH,FUEL LINES,AND MOUNTING HARDWARE	
* 1	PAOZZ	4730011188278	76599	MMF4-SS	CLAMP,HOSE PART OF KIT P/N 57K3497.	4
* 2	PAOZZ	5310006379541	81718	H2525M	WASHER,LOCK PART OF KIT P/N 57K3497.....	2
* 3	PAOZZ	5999014763074	62380	67133A	HARNESS,FUEL PUMP.....	1
* 4	PAOZZ	5340007255280	96903	MS21333-125	CLAMP,LOOP PART OF KIT P/N 57K3497	2
* 5	PAOZZ	5310000116121	29510	120384	WASHER,LOCK PART OF KIT P/N 57K3497.....	1
* 6	PAOZZ	7690014751202	19207	12469040	MARKER,INDENTIFI PART OF KIT P/N 57K3497.....	1
* 7	PAOZZ	5305011389540	96906	MS51863-33	SCREW,TAPPING PART OF KIT P/N 57K3497.....	2
* 8	PAOZZ	5980014746679	19207	12356703-4	DIODE,LIGHT EMITTI PART OF KIT P/N 57K3497.....	1
* 9	PAOZZ	5930006831628	34355	106450	SWITCH,TOGGLE PART OF KIT P/N 57K3497.....	1
* 10	PAOZZ	5975010345871	96906	MS3367-7-2	STRAP,TIEDOWN ELEC PART OF KIT P/N 57K3497.....	2

END OF FIGURE

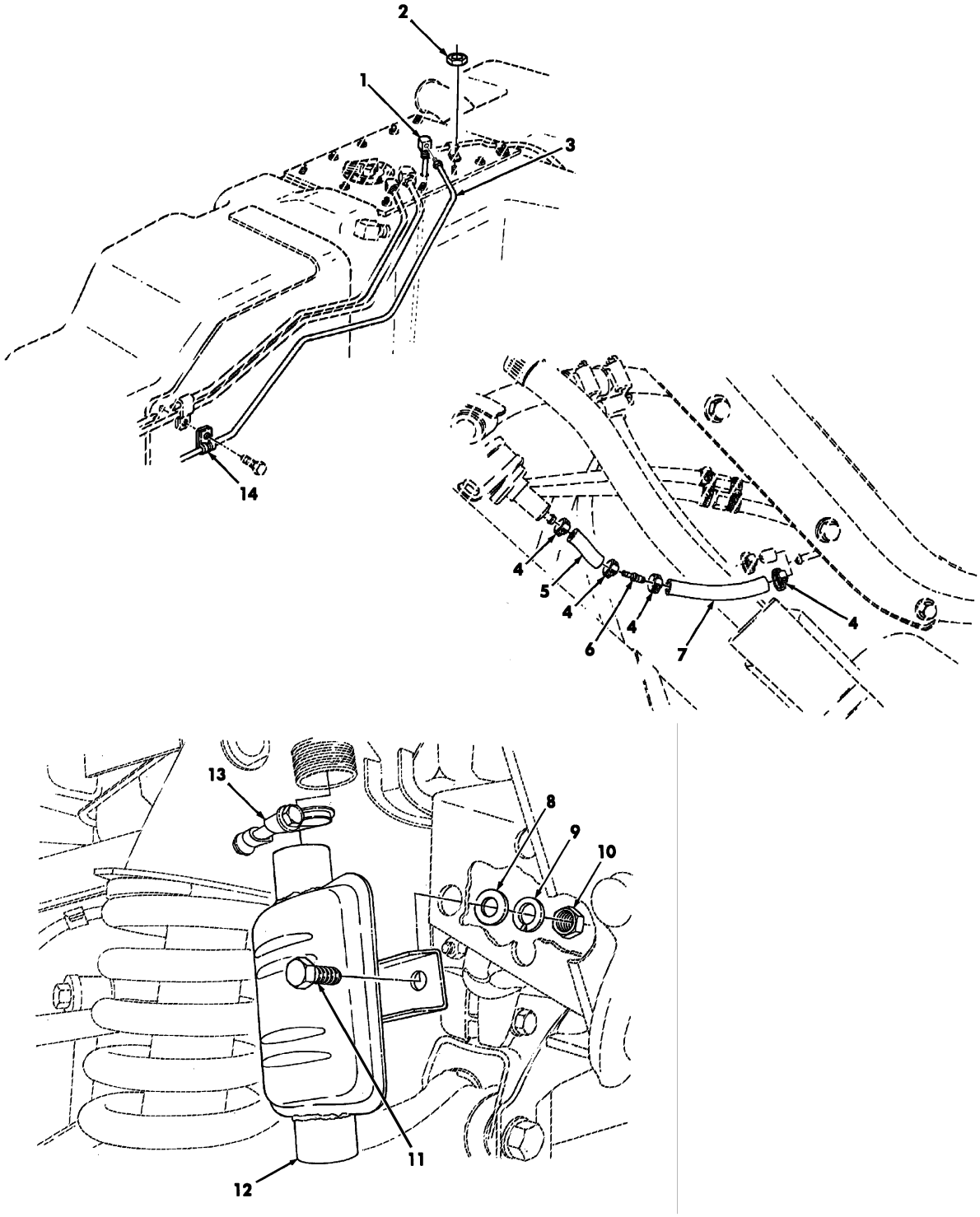

Figure 249D. Engine and Crew Compartment Heater Fuel Supply and Return Lines, Muffler, and Mounting Hardware.

(1) ITEM NO	(2) SMR CODE	(3) NSN	(4) CAGEC	(5) PART NUMBER	(6) DESCRIPTION AND USABLE ON CODES(UOC)	(7) QTY
					GROUP 3303 SPECIAL PURPOSE KITS	
					FIG. 249D ENGINE AND CREW COMPARTMENT HEATER FUEL SUPPLY AND RETURN LINES, MUFFLER,AND MOUNTING HARDWARE	
* 1	PAOZZ	4710013592956	19207	12338548-2	TUBE ASSEMBLY,METAL PART OF KIT P/N 57K3497.....	1
* 2	PAOZZ	5310000614650	96906	MS51943-31	NUT,SELF-LOCKING PART OF KIT P/N 57K3497.....	1
* 3	PAOZZ	4710013586397	19207	12342747	TUBE ASSEMBLY,METAL PART OF KIT P/N 57K3497.....	1
* 4	PAOZZ	4730011188278	76599	MMF4-SS	CLAMP,HOSE PART OF KIT P/N 57K3497.	4
* 5	MOOZZ		24617	9436711-2.0	HOSE,NONMETALLIC MAKE FROM HOSE P/N 9438183 2.00 INCHES LONG PART OF KIT P/N 57K3497.....	1
* 6	PAOZZ	4730014746940	19207	12460438	REDUCER,TUBE PART OF KIT P/N 57K3497.....	1
* 7	MOOZZ		24617	9436356-AR	HOSE,NONMETALLIC MAKE FROM HOSE P/N 9438315,CUT TO LENGTH PART OF KIT P/N 57K3497.....	1
* 8	PAOZZ	5310014086466	24617	9417098	WASHER,FLAT PART OF KIT P/N 57K3497	1
* 9	PAOZZ	5310000116121	29510	120384	WASHER,LOCK PART OF KIT P/N 57K3497	1
* 10	PAOZZ	5310014654525	24617	9418753	NUT,PLAIN HEXAGON PART OF KIT P/N 57K3497.....	1
* 11	PAOZZ	5305009474351	80204	B1821BH075C100N	SCREW,CAP HEXAGON H PART OF KIT P/N 57K3497.....	1
* 12	PAOZZ	2990014753969	62380	19562D	MUFFLER,EXHAUST.....	1
* 13	PAOZZ	5340014753164	62380	367400	CLAMP,LOOP PART OF KIT P/N 57K3497.	1
* 14	PAOZZ	5340009936207	96906	MS21333-99	CLAMP,LOOP PART OF KIT P/N 57K3497.	1

END OF FIGURE

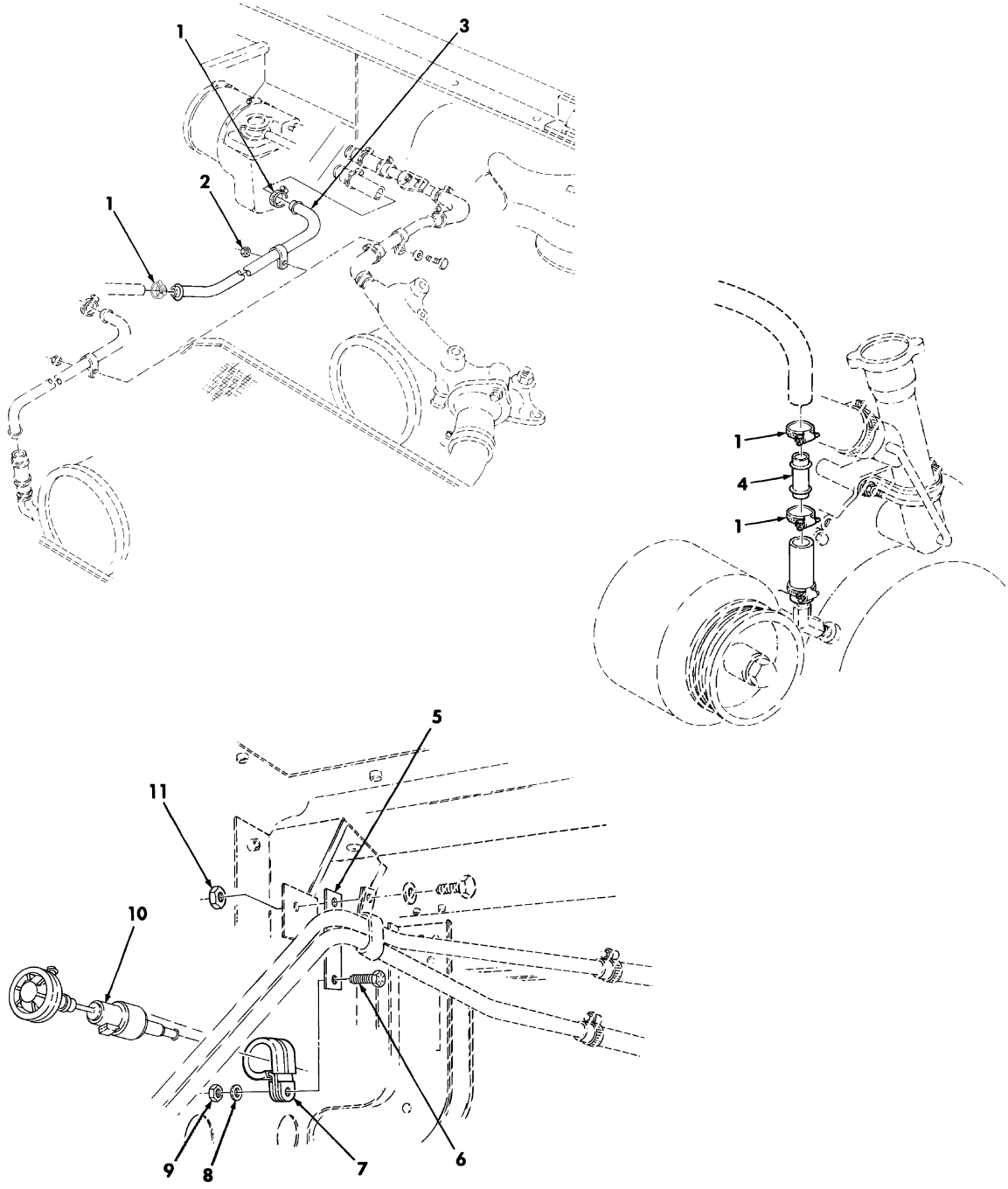

Figure 249E. Engine and Crew Compartment Heater Fuel Pump, Lines, and Mounting Hardware.

(1) ITEM NO	(2) SMR CODE	(3) NSN	(4) CAGEC	(5) PART NUMBER	(6) DESCRIPTION AND USABLE ON CODES(UOC)	(7) QTY
					GROUP 3303 SPECIAL PURPOSE KITS	
					FIG. 249E ENGINE AND CREW COMPARTMENT HEATER FUEL PUMP,LINES,AND MOUNTING HARDWARE	
* 1	PAOZZ	4730009083194	96906	MS35842-11	CLAMP,HOSE PART OF KIT P/N 57K3497.	4
* 2	PAOZZ	5310000614650	96906	MS51943-31	NUT,SELF-LOCKING PART OF KIT P/N 57K3497.....	1
* 3	PAOZZ	4710014746875	19207	12460437	TUBE,BENT METALLIC PART OF KIT P/N 57K3497.....	1
* 4	PAOZZ		62380	A52403-7	MENDER,HOSE PART OF KIT P/N 57K3497	1
* 5	PAOZZ	5340014753147	19207	12469052	STRAP,RETAINING PART OF KIT P/N 57K3497.....	1
* 6	PAOZZ	5306002264825	80204	B1821BH031C075N	BOLT,MACHINE PART OF KIT P/N 57K3497.....	1
* 7	PAOZZ	5340012871979	62380	499.021	CLAMP,LOOP.....	1
* 8	PAOZZ	5310004079566	96906	MS35338-45	WASHER,LOCK PART OF KIT P/N 57K3497	1
* 9	PAOZZ	5310012097702	7X677	9429048	NUT,PLAIN HEXAGON H PART OF KIT P/N 57K3497.....	1
* 10	PAOZZ	2910014753937	62380	91473A	PUMP,FUEL.....	1
* 11	PAOZZ	5310000614650	96906	MS51943-31	NUT,SELF-LOCKING PART OF KIT P/N 57K3497.....	1
*KIT	PAOZZ	2540014754919	19207	57K3497	PARTS KIT,VEHICULAR.....	1
					ADAPTER,CONNECTOR (1) 249A-14	
					ADAPTER,CONNECTOR (1) 249A-15	
					BOLT,MACHINE (2) 249B-21	
					BOLT,MACHINE (1) 249E-6	
					BRACKET,MULTIPLE AN (1) 249B-25	
					BREAKER,CIRCUIT (1) 249B-5	
					CABLE,NIPPLE (3) 249A-18	
					CLAMP,HOSE (7) 249A-2	
					CLAMP,HOSE (4) 249A-6	
					CLAMP,HOSE (4) 249C-1	
					CLAMP,HOSE (4) 249D-4	
					CLAMP,HOSE (4) 249E-1	
					CLAMP,LOOP (1) 249A-25	
					CLAMP,LOOP (1) 249B-13	
					CLAMP,LOOP (1) 249B-14	
					CLAMP,LOOP (2) 249C-4	
					CLAMP,LOOP (1) 249D-13	
					CLAMP,LOOP (1) 249D-14	
					DIODE,LIGHT EMITTING (1) 249C-8	
					GUARD,MUFFLER EXHAU (1) 249B-6	
					HEATER ASSEMBLY (1) 249A-8	
					HOSE,NONMETALLIC (1) 249A-1	
					HOSE,NONMETALLIC (1) 249A-7	
					HOSE,NONMETALLIC (1) 249A-23	
					HOSE,NONMETALLIC (1) 249A-27	
					HOSE,NONMETALLIC (1) 249D-5	
					HOSE,NONMETALLIC (1) 249D-7	
					HOSE,PREFORMED (2) 249A-4	
					HOSE,PREFORMED (1) 249A-29	

(1) ITEM NO	(2) SMR CODE	(3) NSN	(4) CAGEC	(5) PART NUMBER	(6) DESCRIPTION AND USABLE ON CODES(UOC)	(7) QTY
					INSERT,THREADED (2)	249B-24
					INSULATOR,BUSHING (3)	249A-17
					INSULATION,SLEEVING (1)	249B-16
					MARKER (1)	249C-6
					MENDER,HOSE (1)	249A-28
					MENDER,HOSE (1)	249E-4
					NUT,PLAIN HEXAGON (2)	249B-3
					NUT,PLAIN HEXAGON (2)	249B-12
					NUT,PLAIN HEXAGON (1)	249D-10
					NUT,SELF-LOCKING (1)	249A-24
					NUT,SELF-LOCKING (2)	249B-26
					NUT,SELF-LOCKING (1)	249D-2
					NUT,SELF-LOCKING (1)	249E-2
					NUT,SELF,LOCKING (1)	249E-9
					NUT,SELF-LOCKING (1)	249E-11
					REDUCER,TUBE (2)	249A-3
					REDUCER,TUBE (1)	249D-6
					SCREW,CAP HEXAGON H (6)	249B-8
					SCREW,CAP HEXAGON H (1)	249D-11
					SCREW,MACHINE (2)	249B-9
					SCREW,MACHINE (2)	249B-10
					SCREW,TAPPING (2)	249C-7
					SHELL,ELECTRICAL (1)	249A-20
					SHELL,HEAD LIGHT (1)	249B-19
					STRAP,RETAINING (1)	249E-5
					STRAP,TIEDOWN ELEC (5)	249A-26
					STRAP,TIEDOWN ELEC (4)	249B-1
					STRAP,TIEDOWN ELEC (2)	249C-10
					SWITCH,TOGGLE (1)	249C-9
					TERMINAL,LUG (2)	249A-16
					TERMINAL,LUG (2)	249A-19
					TERMINAL,LUG (1)	249A-22
					TERMINAL,LUG (1)	249B-15
					TERMINAL, SET, QUICK (1)	249B-17
					TUBE ASSEMBLY,METAL (1)	249A-5
					TUBE ASSEMBLY,METAL (1)	249D-1
					TUBE ASSEMBLY,METAL (1)	249D-3
					TUBE,BENT METALLIC (1)	249E-3
					WASHER,FLAT (1)	249B-18
					WASHER,FLAT (2)	249B-23
					WASHER,FLAT (1)	249D-8
					WASHER,LOCK (2)	249B-4
					WASHER,LOCK (6)	249B-7
					WASHER,LOCK (2)	249B-11
					WASHER,LOCK (3)	249B-22
					WASHER,LOCK (2)	249C-2
					WASHER,LOCK (1)	249C-5
					WASHER,LOCK (1)	249D-9
					WASHER,LOCK (1)	249E-8
					WASHER,SLOTTED (1)	249A-21
					WIRE,ELECTRICAL (1)	249B-2
					WIRE,ELECTRICAL (1)	249B-20

END OF FIGURE

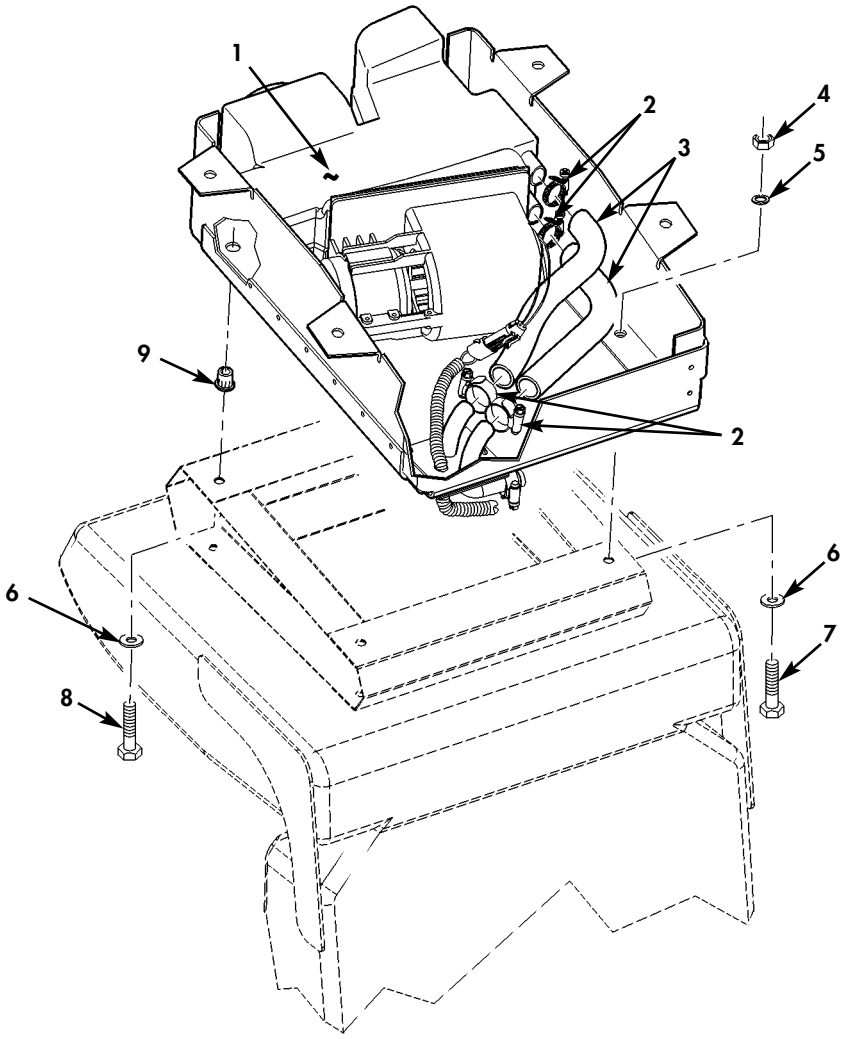

Figure 249F. Rear Seat Heater and Mounting Hardware.

(1) ITEM NO	(2) SMR CODE	(3) NSN	(4) CAGEC	(5) PART NUMBER	(6) DESCRIPTION AND USABLE ON CODES(UOC)	(7) QTY
					GROUP 3303 SPECIAL PURPOSE KITS	
					FIG. 249F REAR SEAT HEATER AND MOUNTING HARDWARE	
* 1	PAOZZ	2540015134068	6W728	4662065-010	HEATER ASSEMBLY PART OF KIT P/N 1000531..... UOC:XBB	1
* 2	PAOZZ	4730015134003	6W728	4662065-025	CLAMP,HOSE PART OF KIT P/N 1000531. UOC:XBB	4
* 3	MOOZZ		6W728	31-00554-15	HOSE,NONMETALLIC MAKE FROM HOSE P/N 6490610019,15 INCHES LONG,PART OF KIT P/N 1000531..... UOC:XBB	2
* 4	PAOZZ	5310014179042	6W728	4397002-002	NUT,PLAIN,HEXAGON 5/16-18 PART OF KIT P/N 1000531..... UOC:XBB	2
* 5	PAOZZ	5310014179942	6W728	4397004-007	WASHER,LOCK 5/16 PART OF KIT P/N 1000531..... UOC:XBB	2
* 6	PAOZZ	5310000814219	96906	MS27183-12	WASHER,FLAT 5/16 PART OF KIT P/N 1000531..... UOC:XBB	4
* 7	PAOZZ	5306002264827	80204	B1821BH031C100N	BOLT,MACHINE 5/16-18 X 1.00 PART OF KIT P/N 1000531..... UOC:XBB	2
* 8	PAOZZ	5306014339183	6W728	4397000-036	BOLT,MACHINE 5/16-18 X 1.25 PART OF KIT P/N 1000531..... UOC:XBB	2
* 9	PAOZZ	5320015050478	78276	ALS4-518-312	NUT,UPSET 5/16-18 PART OF KIT P/N 1000531..... UOC:XBB	2

END OF FIGURE

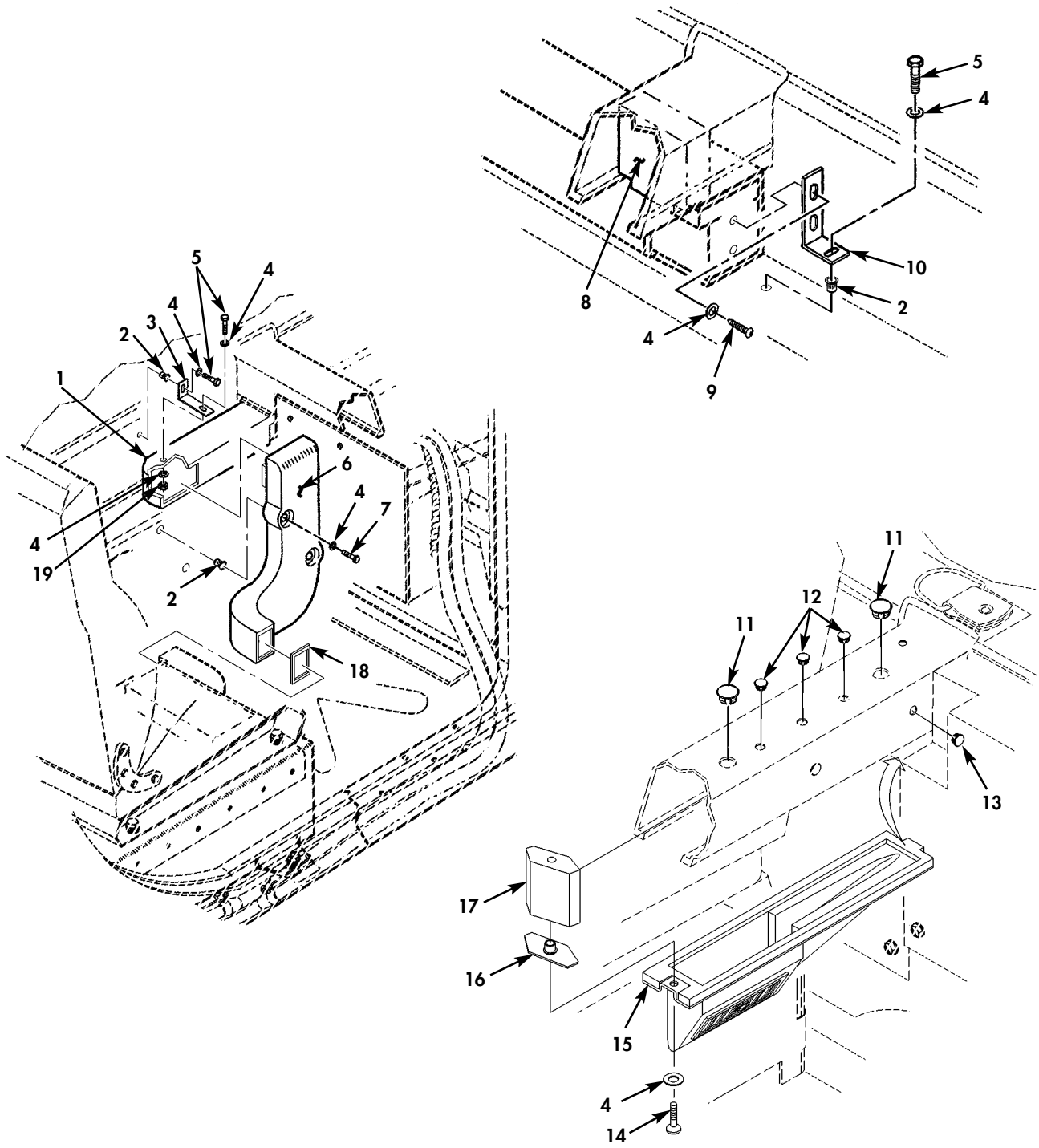

Figure 249G. Rear Seat Heater Manifolds and Vent.

(1) ITEM NO	(2) SMR CODE	(3) NSN	(4) CAGEC	(5) PART NUMBER	(6) DESCRIPTION AND USABLE ON CODES(UOC)	(7) QTY
					GROUP 3303 SPECIAL PURPOSE KITS	
					FIG. 249G REAR SEAT HEATER MANIFOLDS AND VENT	
* 1	PAOZZ	2815015134050	6W728	1000125-011	MANIFOLD,HORIZONTAL PART OF KIT P/N 1000531..... UOC:XBB	1
* 2	PAOZZ	5310015212135	6W728	4397050-025	NUT,PLAIN,BLIND RIV 1/4-20 PART OF KIT P/N 1000531..... UOC:XBB	4
* 3	PAOZZ		6W728	1000440-002	BRACKET,MANIFOLD HORIZONTAL PART OF KIT P/N 1000531..... UOC:XBB	1
* 4	PAOZZ	5310014357784	6W728	4397005-010	WASHER,FLAT PART OF KIT P/N 1000531 UOC:XBB	9
* 5	PAOZZ	5306014307399	6W728	4397000-006	BOLT,MACHINE 1/4-20 X 3/4. PART OF KIT P/N 1000531..... UOC:XBB	1
* 6	PAOZZ	2815015134025	6W728	1000125-010	MANIFOLD,VERTICAL PART OF KIT P/N 1000531..... UOC:XBB	1
* 7	PAOZZ	5306014339187	6W728	4397000-015	BOLT,MACHINE 1/4-20 X 2.25 PART OF KIT P/N 1000531..... UOC:XBB	2
* 8	PAOZZ	2815015134065	6W728	1000125-014	BAFFEL,HORIZONTAL PART OF KIT P/N 1000531..... UOC:XBB	1
* 9	PAOZZ	5305004324203	96906	MS51861-47	SCREW,TAPPING #10 X 3/4 PART OF KIT P/N 1000531..... UOC:XBB	2
* 10	PAOZZ	2540015134066	6W728	1000039-002	VEHICLE,SUPPLY HEAT PART OF KIT P/N 1000531..... UOC:XBB	1
* 11	PAOZZ	5340015134908	6W728	1000090-007	PLUG,PROTECTIVE DUS 1/2,NYLON BLACK PART OF KIT P/N 1000531..... UOC:XBB	2
* 12	PAOZZ	5340015134912	6W728	1000090-003	PLUG,PROTECTIVE DUS 1/4,NYLON BLACK PART OF KIT P/N 1000531..... UOC:XBB	3
* 13	PAOZZ	5340015134910	6W728	1000090-006	PLUG,PROTECTIVE DUS 7/16,NYLON BLACK PART OF KIT P/N 1000531..... UOC:XBB	2
* 14	PAOZZ	5305014365414	6W728	4397018-094	SCREW,MACHINE 1/4-20 X 1.25 PART OF KIT P/N 1000531..... UOC:XBB	1
* 15	PAOZZ	2815015134054	6W728	1000125-012	MANIFOLD,VENT ASSEMBLY PART OF KIT P/N 1000531..... UOC:XBB	1
* 16	PAOZZ		6W728	1000079-002	FLANGE NUT,MANIFOLD PART OF KIT P/N 1000531..... UOC:XBB	1
* 17	PAOZZ	2815015134060	6W728	1000125-013	BAFFLE,VENT SIDE "B" BEAM PART OF KIT P/N 1000531.....	1

(1) ITEM NO	(2) SMR CODE	(3) NSN	(4) CAGEC	(5) PART NUMBER	(6) DESCRIPTION AND USABLE ON CODES(UOC)	(7) QTY
					UOC:XBB	
* 18	PAOZZ		6W728	1000125-015	GASKET,HEATER 1/4 PART OF KIT P/N 1000531.....	1
					UOC:XBB	
* 19	PAOZZ	5310014398173	6W728	4397064-001	NUT,SELF-LOCKING,HE 1/4-20 PART OF KIT P/N 1000531.....	1
					UOC:XBB	

END OF FIGURE

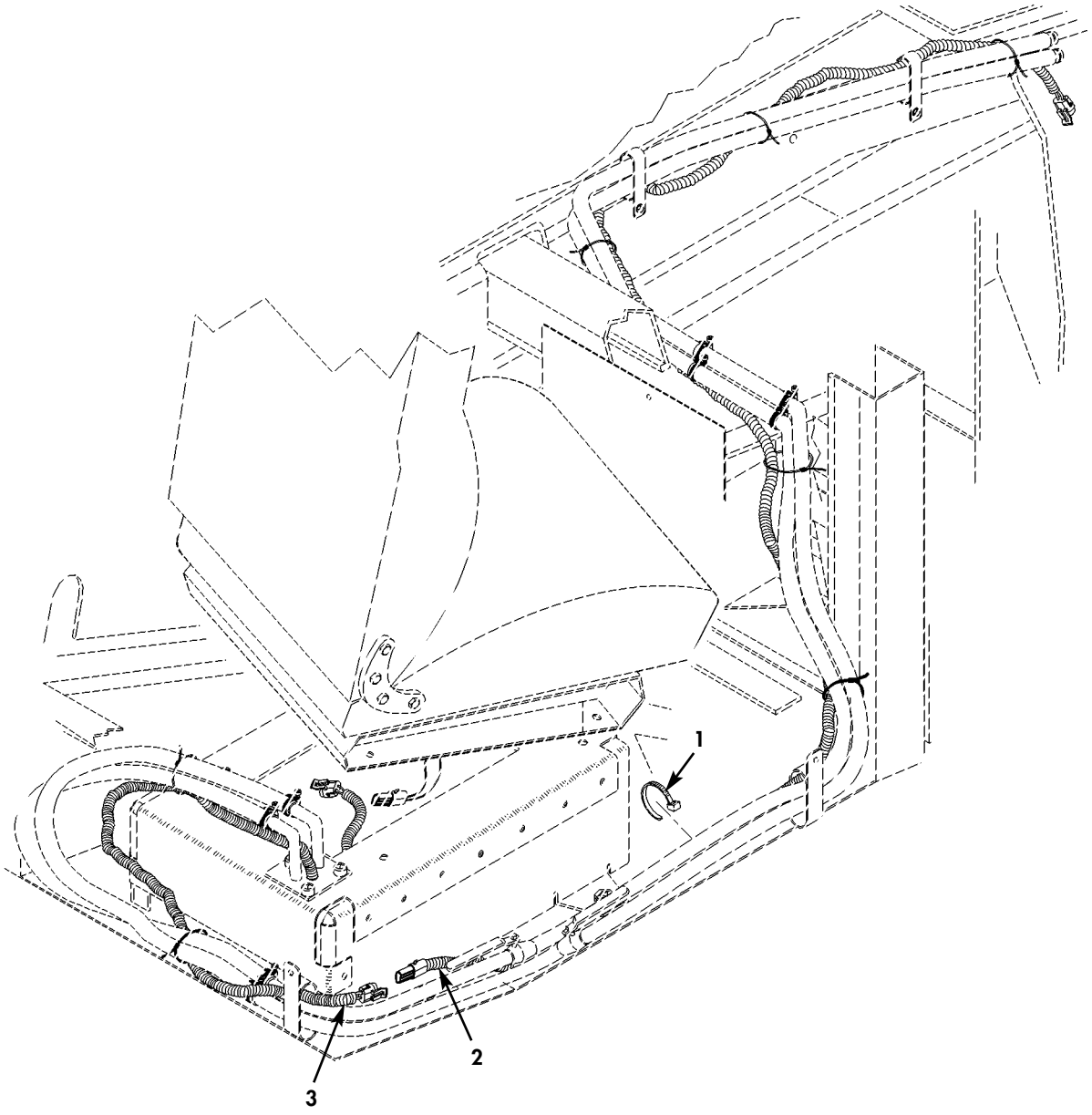

Figure 249H. Rear Seat Heater Electrical Harness and Extension.

(1) ITEM NO	(2) SMR CODE	(3) NSN	(4) CAGEC	(5) PART NUMBER	(6) DESCRIPTION AND USABLE ON CODES(UOC)	(7) QTY
					GROUP 3303 SPECIAL PURPOSE KITS	
					FIG. 249H REAR SEAT HEATER ELECTRICAL HARNESS AND EXTENSION	
* 1	PAOZZ	5975015134103	6W728	4662065-027	WIRE TIE PART OF KIT P/N 1000531... UOC:XBB	18
* 2	PAOZZ	6150015134093	6W728	4662065-019	WIRING HARNESS,BRAN PART OF KIT P/N 1000531..... UOC:XBB	1
* 3	PAOZZ	6150015134094	6W728	4662065-018	WIRING HARNESS,BRAN PART OF KIT P/N 1000531..... UOC:XBB	1

END OF FIGURE

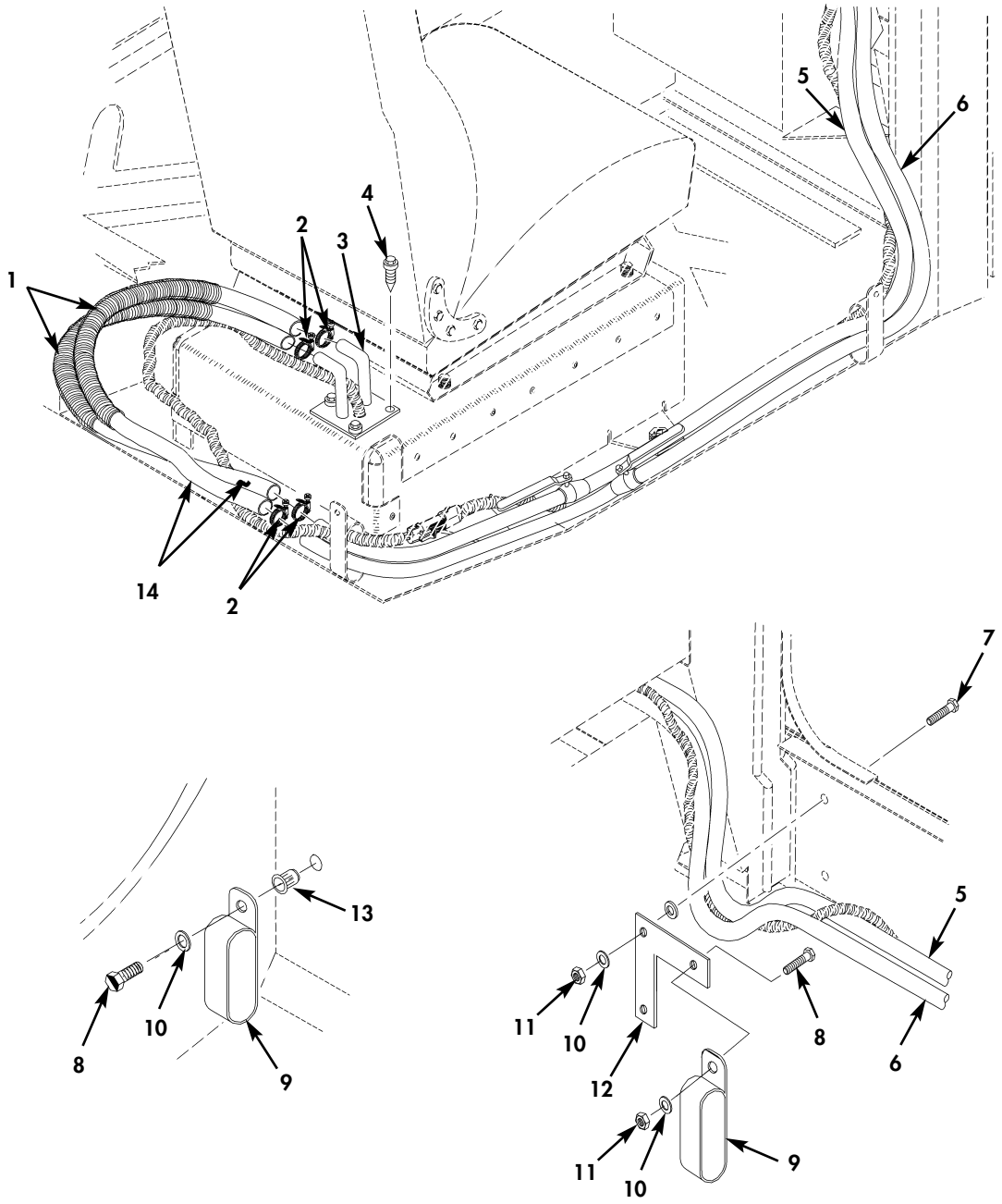

Figure 249I. Rear Seat Heater Tubes and Hoses (Sheet 1 of 2).

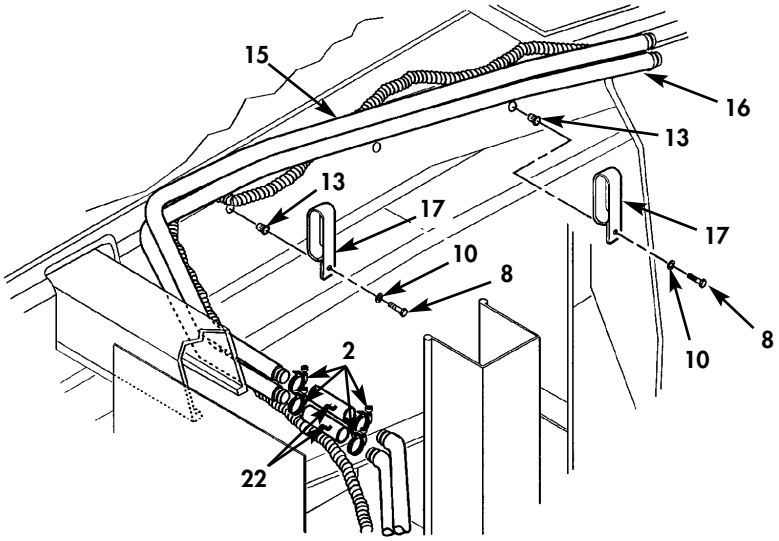

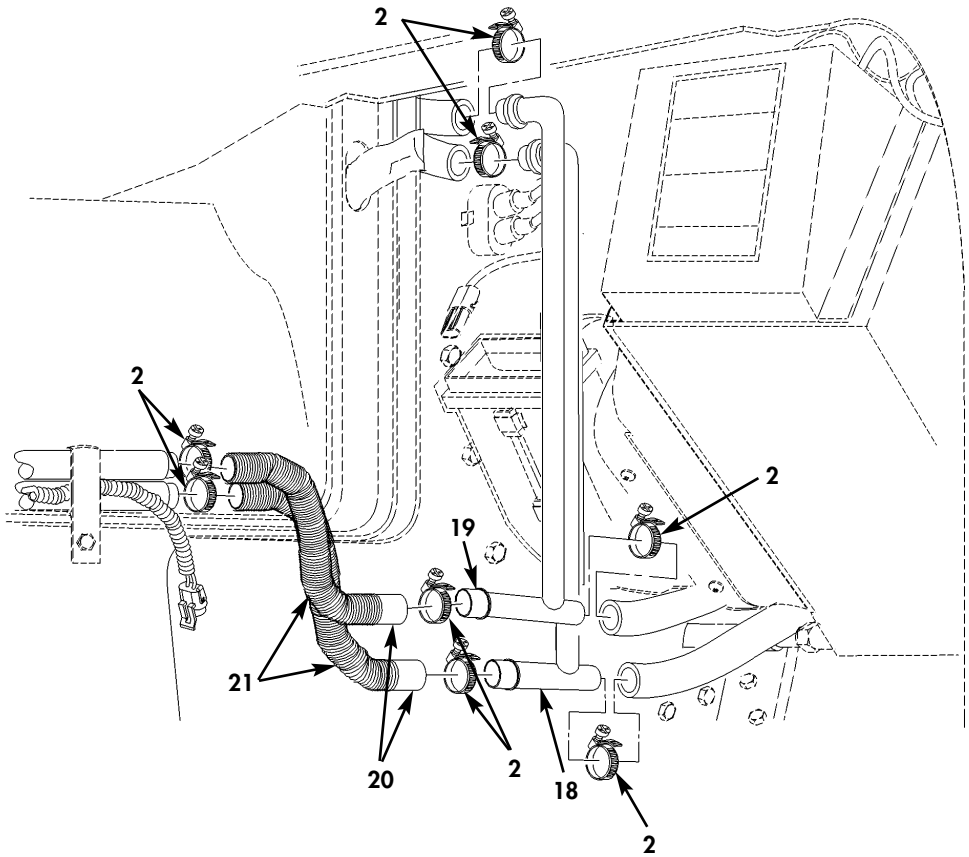

Figure 249I. Rear Seat Heater Tubes and Hoses (Sheet 2 of 2).

(1) ITEM NO	(2) SMR CODE	(3) NSN	(4) CAGEC	(5) PART NUMBER	(6) DESCRIPTION AND USABLE ON CODES(UOC)	(7) QTY
					GROUP 3303 SPECIAL PURPOSE KITS	
					FIG. 249I REAR SEAT HEATER TUBES AND HOSES	
* 1	MOOZZ		6W728	1000111-007-12	SPRING,HOSE GUARD MAKE FROM SPRING HOSE GUARD P/N 1000111-007,12 INCHES LONG PART OF KIT P/N 1000531..... UOC:XBB	1
* 2	PAOZZ	4730015134003	6W728	4662065-025	CLAMP,HOSE PART OF KIT P/N 1000531. UOC:XBB	16
* 3	PAOZZ	4730015134042	6W728	4662065-017	MANIFOLD,FUELING PART OF KIT P/N 1000531..... UOC:XBB	1
* 4	PAOZZ	5305015135713	6W728	1000109-033	SCREW,SHOULDER PART OF KIT P/N 1000531..... UOC:XBB	1
* 5	PAOZZ	4710015134070	6W728	4662065-011	TUBE ASSEMBLY,METAL OUT W/VALVE TOP PART OF KIT P/N 1000531..... UOC:XBB	1
* 6	PAOZZ	4710015134015	6W728	4662065-012	TUBE ASSEMBLY,METAL IN W/VALVE BOTTOM PART OF KIT P/N 1000531..... UOC:XBB	1
* 7	PAOZZ	5306014339186	6W728	4397000-014	BOLT,MACHINE 1/4-20 X 2.00 PART OF KIT P/N 1000531..... UOC:XBB	2
* 8	PAOZZ	5306014307399	6W728	4397000-006	BOLT,MACHINE 1/4-20 X 3/4 PART OF KIT P/N 1000531..... UOC:XBB	4
* 9	PAOZZ	4730015134061	6W728	4662065-024	CLAMP,HOSE DOUBLE. PART OF KIT P/N 1000531..... UOC:XBB	2
* 10	PAOZZ	5310014357784	6W728	4397005-010	WASHER,FLAT 9/32 PART OF KIT P/N 1000531..... UOC:XBB	7
* 11	PAOZZ	5310014398173	6W728	4397064-001	NUT,SELF-LOCKING HE 1/4-20 PART OF KIT P/N 1000531..... UOC:XBB	3
* 12	PAOZZ		6W728	4662065-023	BRACKET,L HOSE MOUNT PART OF KIT P/N 1000531..... UOC:XBB	1
* 13	PAOZZ	5310015212135	6W728	4397050-025	NUT,PLAIN,BLIND RIV 1/4-20 PART OF KIT P/N 1000531..... UOC:XBB	3
* 14	MOOZZ		6W728	31-00554-32	HOSE NONMETALLIC MAKE FROM HOSE P/N 6490610019,32 INCHES LONG,PART OF KIT P/N 1000531..... UOC:XBB	2
* 15	PAOZZ	4710015134030	6W728	4662065-014	TUBE ASSEMBLY,METAL OUT,HEATER TOP PART OF KIT P/N 1000531..... UOC:XBB	1
* 16	PAOZZ		6W728	4662065-013	TUBE ASSEMBLY,METAL IN,HEATER BOTTOM PART OF KIT P/N 1000531.....	1

(1) ITEM NO	(2) SMR CODE	(3) NSN	(4) CAGEC	(5) PART NUMBER	(6) DESCRIPTION AND USABLE ON CODES(UOC)	(7) QTY
					UOC:XBB	
* 17	PAOZZ		6W728	1000070-002	CLIP,INSULATED HEATER LINE TIEDOWN PART OF KIT P/N 1000531..... UOC:XBB	2
* 18	PAOZZ	4730015134021	6W728	4662065-015	MANIFOLD,AIR LINE HEATHER OUT, BOTTOM PART OF KIT P/N 1000531..... UOC:XBB	1
* 19	PAOZZ	4730015134027	6W728	4662065-016	MANIFOLD,AIR LINE HEATER OUT,TOP PART OF KIT P/N 1000531..... UOC:XBB	1
* 20	MOOZZ		6W728	31-00554-12	HOSE,NONMETALLIC MAKE FROM HOSE P/N 6490610019,12 INCHES LONG,PART OF KIT P/N 1000531..... UOC:XBB	2
* 21	PAOZZ		6W728	4662065-026	INSULATION,BRAIDED 12 INCHES LONG PART OF KIT P/N 1000531..... UOC:XBB	2
* 22	MOOZZ		6W728	31-00554-3	HOSE,NONMETALLIC MAKE FROM HOSE, P/N 6490610019,3 INCHES LONG..... UOC:XBB	2

END OF FIGURE

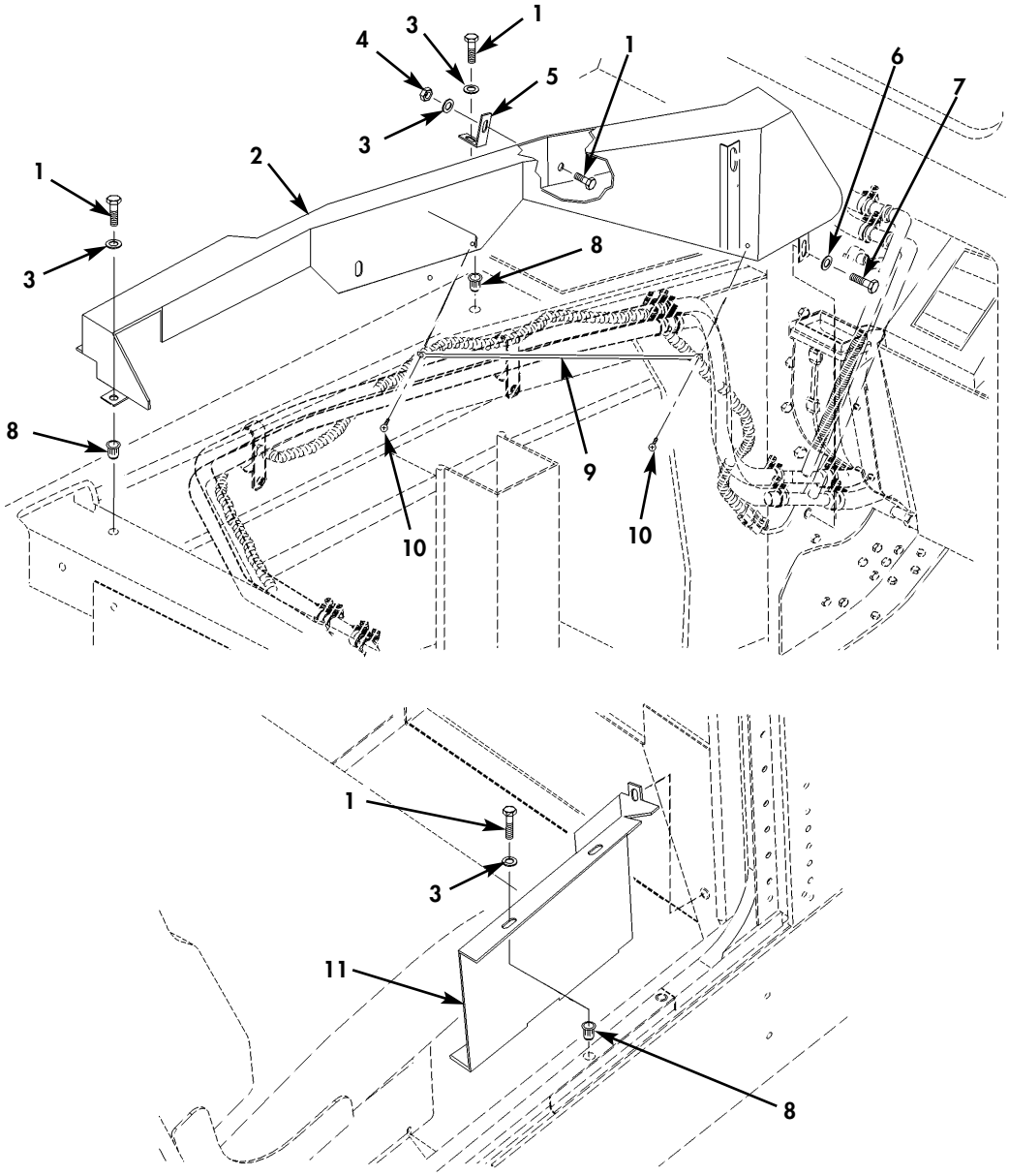

Figure 249J. Rear Seat Heater Line Guard and Cover.

(1) ITEM NO	(2) SMR CODE	(3) NSN	(4) CAGEC	(5) PART NUMBER	(6) DESCRIPTION AND USABLE ON CODES(UOC)	(7) QTY
					GROUP 3303 SPECIAL PURPOSE KITS	
					FIG. 249J REAR SEAT HEATER LINE GUARD AND COVER	
* 1	PAOZZ	5306014307399	6W728	4397000-006	BOLT,MACHINE 1/4-20 X 3/4 PART OF KIT P/N 1000531..... UOC:XBB	8
* 2	PAOZZ		6W728	1000028-002	GUARD,HEATER LINE PART OF KIT P/N 1000531..... UOC:XBB	1
* 3	PAOZZ	5310014357784	6W728	4397005-010	WASHER,FLAT 9/32 PART OF KIT P/N 1000531..... UOC:XBB	8
* 4	PAOZZ	5310014398173	6W728	4397064-001	NUT,SELF-LOCKING,HE 1/4-20 PART OF KIT P/N 1000531..... UOC:XBB	1
* 5	PAOZZ		6W728	1000440-002	BRACKET,MOUNTING PART OF KIT P/N 1000531..... UOC:XBB	1
* 6	PAOZZ	5310014192413	6W728	4397005-014	WASHER,FLAT 13/32 PART OF KIT P/N 1000531..... UOC:XBB	1
* 7	PAOZZ	5306014339197	6W728	4397000-062	BOLT,MACHINE 3/8-16 X 1.25 PART OF KIT P/N 1000531..... UOC:XBB	1
* 8	PAOZZ	5310015212135	6W728	4397050-025	NUT,PLAIN,BLIND RIV 1/4-20 PART OF KIT P/N 1000531..... UOC:XBB	7
* 9	PAOZZ	2590012513070	19207	12339015-1	RETAINER,INSULATION PART OF KIT P/N 1000531..... UOC:XBB	1
* 10	PAOZZ	5305015135713	6W728	1000109-033	SCREW,SHOULDER #10 X 3/4 PART OF KIT P/N 1000531..... UOC:XBB	2
* 11	PAOZZ		6W728	1000441-002	COVER,HEATER TUBE PART OF KIT P/N 1000531..... UOC:XBB	1
KIT	PAOZZ		6W728	1000531	KIT,SUPPLEMENTAL HEATER..... UOC:XBB	1
					BAFFLE,MANIFOLD (1) 249G-8	
					BAFFLE,VENT SIDE (1) 249G-17	
					BOLT,MACHINE (2) 249F-7	
					BOLT,MACHINE (2) 249F-8	
					BOLT,MACHINE (1) 249G-5	
					BOLT,MACHINE (2) 249G-7	
					BOLT,MACHINE (2) 249I-7	
					BOLT,MACHINE (4) 249I-8	
					BOLT,MACHINE (8) 249J-1	
					BRACKET,L (1) 249I-12	
					BRACKET,MANIFOLD (1) 249G-3	
					BRACKET,MANIFOLD (1) 249G-10	
					BRACKET,MOUNTING (1) 249J-5	

(1) ITEM NO	(2) SMR CODE	(3) NSN	(4) CAGEC	(5) PART NUMBER	(6) DESCRIPTION AND USABLE ON CODES(UOC)	(7) QTY
					CLAMP,HOSE (4) 249F-2	
					CLAMP,HOSE (16) 249I-2	
					CLAMP,HOSE (2) 249I-9	
					CLIP,INSULATED (2) 249I-17	
					COVER,HEATER TUBE (1) 249J-11	
					FLANGE NUT,MANIFOLD(1) 249G-16	
					GASKET,HEATER (1) 249G-18	
					GUARD,HEATER LINE (1) 249J-2	
					HARNESS,WIRING (1) 249H-2	
					HARNESS,WIRING (1) 249H-3	
					HEATER ASSEMBLY (1) 249F-1	
					HOSE,NONMETALLIC (2) 249F-3	
					HOSE,NONMETALLIC (2) 249I-14	
					HOSE,NONMETALLIC (2) 249I-20	
					HOSE,NONMETALLIC (2) 249I-22	
					INSULATION,BRAIDED (2) 249I-21	
					MANIFOLD ASSEMBLY (1) 249G-1	
					MANIFOLD ASSEMBLY (1) 249G-6	
					MANIFOLD ASSEMBLY (1) 249G-15	
					MANIFOLD,SEAT BASE (1) 249I-3	
					MANIFOLD,TEE (1) 249I-18	
					MANIFOLD,TEE (1) 249I-19	
					NUT,PLAIN,HEXAGON (2) 249F-4	
					NUT,SELF-LOCKING,HE(1) 249G-19	
					NUT,SELF-LOCKING,HE(3) 249I-11	
					NUT,SELF-LOCKING,HE(1) 249J-4	
					NUT,UPSET (2) 249F-9	
					NUT,UPSET (4) 249G-2	
					NUT,UPSET (3) 249I-13	
					NUT,UPSET (7) 249J-8	
					PLUG,HOLE (2) 249G-11	
					PLUG,HOLE (3) 249G-12	
					PLUG,HOLE (2) 249G-13	
					RETAINER,INSULATION(1) 249J-9	
					SCREW,CAP,HEXAGON H(3) 249I-4	
					SCREW,CAP,HEXAGON H(1) 249J-7	
					SCREW,CAP,HEXAGON H(2) 249J-10	
					SCREW,MACHINE (1) 249G-14	
					SCREW,TAPPING (2) 249G-9	
					SPRING,HOSE GUARD (1) 249I-1	
					STRAP,TIEDOWN,ELECT(18) 249H-1	
					TUBE ASSEMBLY,METAL(1) 249I-5	
					TUBE ASSEMBLY,METAL(1) 249I-6	
					TUBE ASSEMBLY,METAL(1) 249I-15	
					TUBE ASSEMBLY,METAL(1) 249I-16	
					WASHER,FLAT (4) 249F-6	
					WASHER,FLAT (9) 249G-4	
					WASHER,FLAT (7) 249I-10	
					WASHER,FLAT (8) 249J-3	
					WASHER,FLAT (1) 249J-6	
					WASHER,LOCK (2) 249F-5	

END OF FIGURE

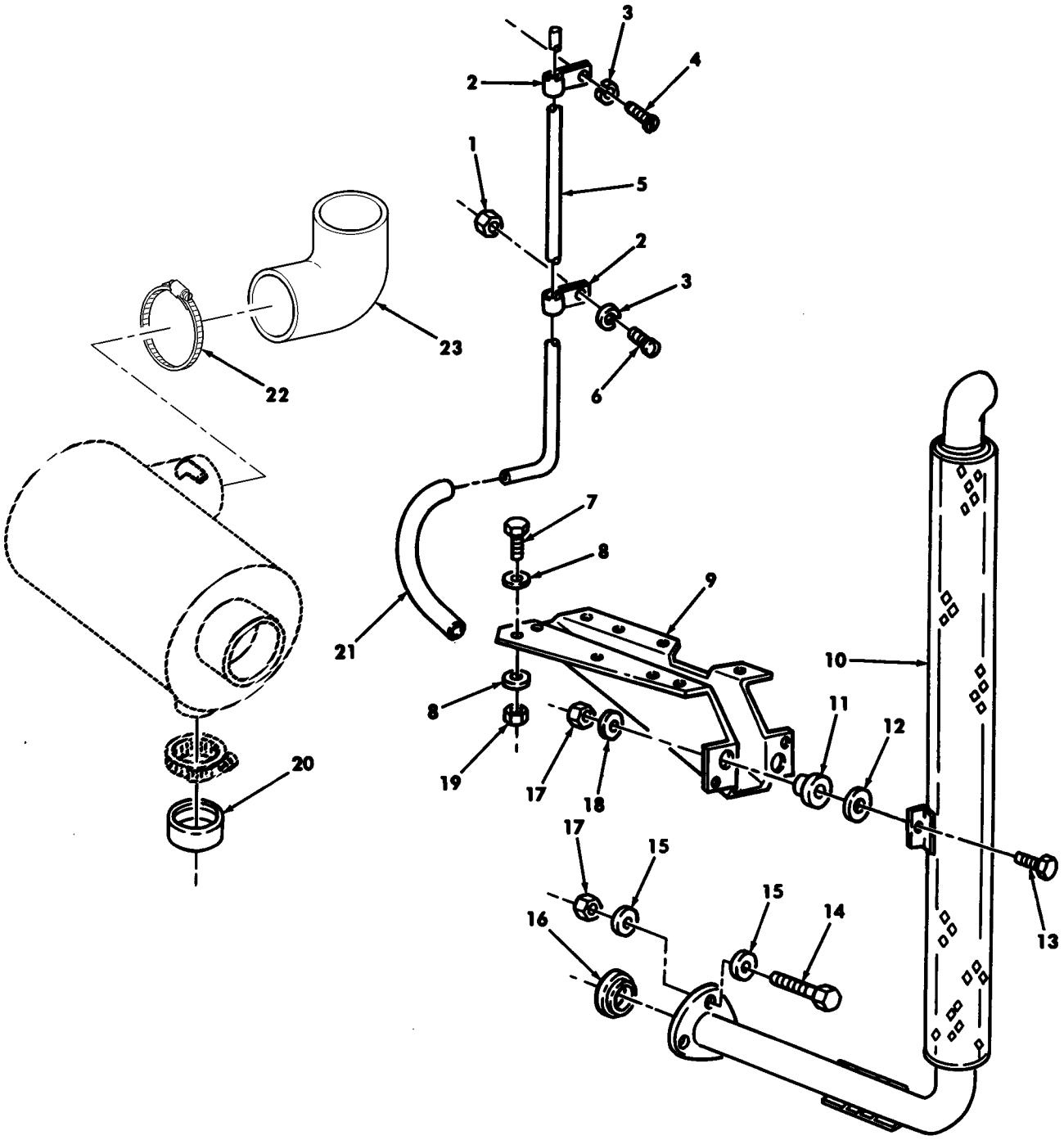

Figure 250. Deep Water Fording Kit, Intake and Exhaust Systems.

(1) ITEM NO	(2) SMR CODE	(3) NSN	(4) CAGEC	(5) PART NUMBER	(6) DESCRIPTION AND USABLE ON CODES(UOC)	(7) QTY
					GROUP 3305 DEEP WATER FORDING KITS	
					FIG. 250 DEEP WATER FORDING KIT, INTAKE AND EXHAUST SYSTEMS	
1	PAOZZ	5310012490899	96906	MS51470-03	NUT,PLAIN,HEXAGON #10-32 PART OF KIT P/N 57K3553..... UOC:XAA	1
2	PAOZZ	5340000797837	96906	MS21333-67	CLAMP,LOOP PART OF KIT P/N 57K3553.. UOC:XAA	2
3	PAOZZ	5310007217809	96906	MS35340-43	WASHER,LOCK #10 PART OF KIT P/N 57K3553..... UOC:XAA	2
* 4	PAOZZ	5305012113786	24617	167163	SCREW,TAPPING,THREA #10-32 X 1/2 PART OF KIT P/N 57K3553..... UOC:XAA	1
5	PFOZZ	4710012096746	34623	12339833	TUBE,BENT,METALLIC PART OF KIT P/N 57K3553..... UOC:XAA	1
6	PAOZZ	5305009897434	96906	MS35207-263	SCREW,MACHINE #10-32 X 1/2 PART OF KIT P/N 57K3553..... UOC:XAA	1
7	PAOZZ	5305000680508	80204	B1821BH025C075N	SCREW,CAP,HEXAGON H 1/4-20 X 3/4 PART OF KIT P/N 57K3553..... UOC:XAA	8
8	PAOZZ	5310011023270	24617	2436161	WASHER,FLAT 1/4 PART OF KIT P/N 57K3553..... UOC:XAA	16
9	PFOZZ	5340011857959	19207	12339848	BRACKET,PIPE PART OF KIT P/N 57K3553 UOC:XAA	1
10	PAOZZ	2990014964023	19207	12469361	PIPE,EXHAUST PART OF KIT P/N 57K3553 UOC:XAA	1
11	PAOZZ	2990013835689	34623	12341027	HANGER,ENGINE EXHAU 3/8 PART OF KIT P/N 57K3553..... UOC:XAA	2
12	PAOZZ	5310013857083	96906	MS51412-27	WASHER,FLAT 3/8 PART OF KIT P/N 57K3553..... UOC:XAA	2
13	PAOZZ	5305005432419	80204	B1821BH038C113N	SCREW,CAP,HEXAGON H 3/8-16 X 1.125 PART OF KIT P/N ..... UOC:XAA	2
14	PAOZZ	5305007829489	80204	B1821BH038C200N	SCREW,CAP,HEXAGON H 3/8-16 X 2.00 PART OF KIT P/N 57K3553..... UOC:XAA	3
15	PAOZZ	5310014124013	24617	2436163	WASHER,FLAT 3/8 PART OF KIT P/N 57K3553..... UOC:XAA	6
16	PFOZZ	5330012000466	19207	12338339	GASKET PART OF KIT P/N 57K3553..... UOC:XAA	1
* 17	PAOZZ	5310015092488	81349	M45913/3-6CG8C	NUT,SELF-LOCKING,HE 3/8-16 PART OF KIT P/N 57K3553..... UOC:XAA	5

(1) ITEM NO	(2) SMR CODE	(3) NSN	(4) CAGEC	(5) PART NUMBER	(6) DESCRIPTION AND USABLE ON CODES(UOC)	(7) QTY
* 18	PAOZZ	5310012113811	7X677	9417793	WASHER,FLAT 3/8 PART OF KIT P/N 57K3553..... UOC:XAA	2
* 19	PAOZZ	5310000614650	96906	M45913/3-4CG8C	NUT,SELF-LOCKING,HE 1/4-20 PART OF PART OF KIT P/N 57K3553..... UOC:XAA	8
20	PAOZZ	5340011972382	19207	12339996	CAP,PROTECTIVE,DUST PART OF KIT P/N 57K3553..... UOC:XAA	1
* 21	MOOZZ		19207	CPR104420-2-11	HOSE,NONMETALLIC MAKE FROM HOSE P/N 246115,11 INCHES LONG PART OF KIT P/N 57K3553..... UOC:XAA	1
* 22	PAOZZ	4730012969318	19207	11608950-18	CLAMP,HOSE PART OF KIT P/N 57K3553. UOC:XAA	1
* 23	PAOZZ	4720011945334	19207	12339840	ELBOW,HOSE PART OF KIT P/N 57K3553. UOC:XAA	1

END OF FIGURE

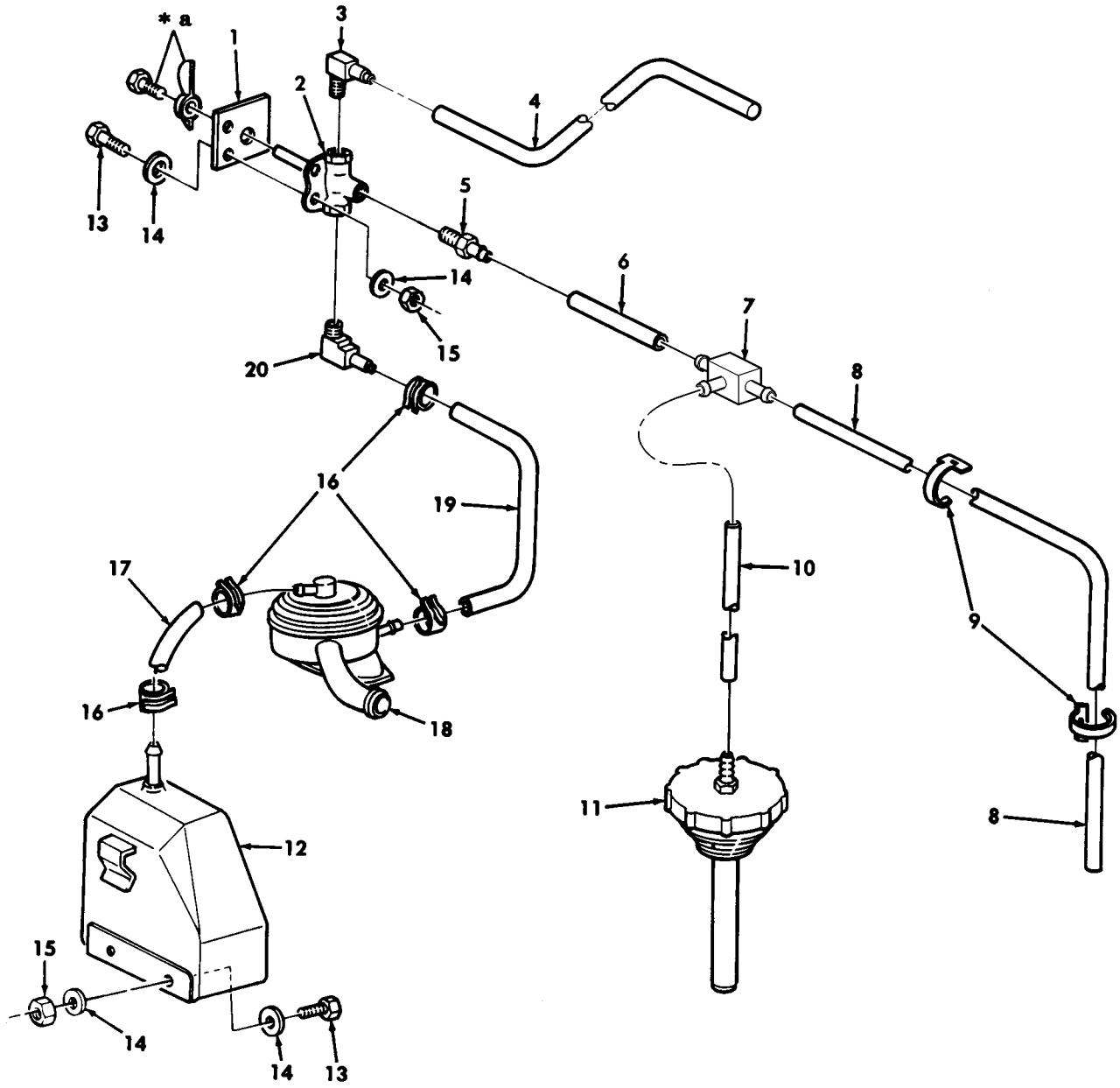

✱ **a** PART OF ITEM 2

Figure 251. Deep Water Fording Kit, Selector Valve, Sensor Cup, and Vent Lines.

(1) ITEM NO	(2) SMR CODE	(3) NSN	(4) CAGEC	(5) PART NUMBER	(6) DESCRIPTION AND USABLE ON CODES(UOC)	(7) QTY
					GROUP 3305 DEEP WATER FORDING KITS	
					FIG. 251 DEEP WATER FORDING KIT, SELECTOR VALVE,SENSOR CUP,AND VENT LINES	
1	PAOZZ	9905012058635	19207	12339109	PLATE,IDENTIFICATIO PART OF KIT P/N 57K3553..... UOC:XAA	1
2	PAOZZ	4820011928030	70411	220C-J	VALVE,CROSS PART OF KIT P/N 57K3553 UOC:XAA	1
* 3	PAOZZ	4730010707680	79470	1069X6X2	ELBOW,PIPE TO HOSE PART OF KIT P/N 57K3553..... UOC:XAA	1
* 4	MOOZZ		19207	12339981	TUBE,NONMETALLIC MAKE FROM TUBE P/N CPR104420-1,70 INCHES LONG PART OF KIT P/N 57K3553..... UOC:XAA	1
* 5	PAOZZ	4730011855348	01989	1068X4	ADAPTER,STRAIGHT,PI PART OF KIT P/N 57K3553..... UOC:XAA	1
* 6	MOOZZ		34623	5584373	TUBE,NONMETALLIC MAKE FROM TUBE P/N CPR104420-1,26 INCHES LONG PART OF KIT P/N 57K3553..... UOC:XAA	1
* 7	PAOZZ	4730010035105	79470	1064X4	TEE,HOSE PART OF KIT P/N 57K3553... UOC:XAA	1
* 8	MOOZZ		34623	5591253	TUBE MAKE FROM TUBE P/N CPR104420-1 41 INCHES LONG PART OF KIT P/N 57K3553..... UOC:XAA	1
* 9	PAOZZ	5340011494434	7X677	3816659	STRAP,LINE SUPPORTI PART OF KIT P/N 57K3553..... UOC:XAA	3
* 10	MOOZZ		34623	5582644	TUBE MAKE FROM TUBE P/N CPR104420-1 20 INCHES LONG PART OF KIT P/N 57K3553..... UOC:XAA	1
* 11	PAOZZ	2590011924425	19207	12339997	CAP,FILLER OPENING SERIAL NUMBER 196900 AND BELOW PART OF KIT P/N 57K3553..... UOC:XAA	1
* 12	PAOZZ	2540011924502	19207	12339845	CUP,SENSOR,DEEP WAT PART OF KIT P/N 57K3553..... UOC:XAA	1
* 13	PAOZZ	5305000680502	80205	MS90725-6	SCREW,CAP,HEXAGON H 1/4-20 X 3/4 PART OF KIT P/N 57K3553..... UOC:XAA	4
* 14	PAOZZ	5310011023270	24617	2436161	WASHER,FLAT 1/4 PART OF KIT P/N 57K3553..... UOC:XAA	8
* 15	PAOZZ	5310000614650	96906	M45913/3-4CG8C	NUT,SELF-LOCKING,HE 1/4-20 PART OF KIT P/N 57K3553.....	4

(1) ITEM NO	(2) SMR CODE	(3) NSN	(4) CAGEC	(5) PART NUMBER	(6) DESCRIPTION AND USABLE ON CODES(UOC)	(7) QTY
					UOC:XAA	
* 16	PAOZZ	4730009541251	59199	UM5008	CALMP,HOSE PART OF KIT P/N 57K3553.	4
					UOC:XAA	
* 17	MOOZZ		34623	12339981-2	HOSE,NONMETALLIC MAKE FROM HOSE P/N RB1450-1-4IDX-20D,25 INCHES LONG PART OF KIT P/N 57K3553.....	1
					UOC:XAA	
* 18	PAOZZ	4820011927678	70040	25043364	VALVE,VENT PART OF KIT P/N 57K3553..	1
					UOC:XAA	
* 19	MOOZZ		34623	5583855	HOSE MAKE FROM HOSE P/N RB1450-1-41DX1-20D, 42 INCHES LONG PART OF KIT P/N 57K3553.....	1
					UOC:XAA	
* 20	PAOZZ	4730012004277	79470	1582	ELBOW,PIPE TO HOSE PART OF KIT P/N 57K3553.....	1
					UOC:XAA	

END OF FIGURE

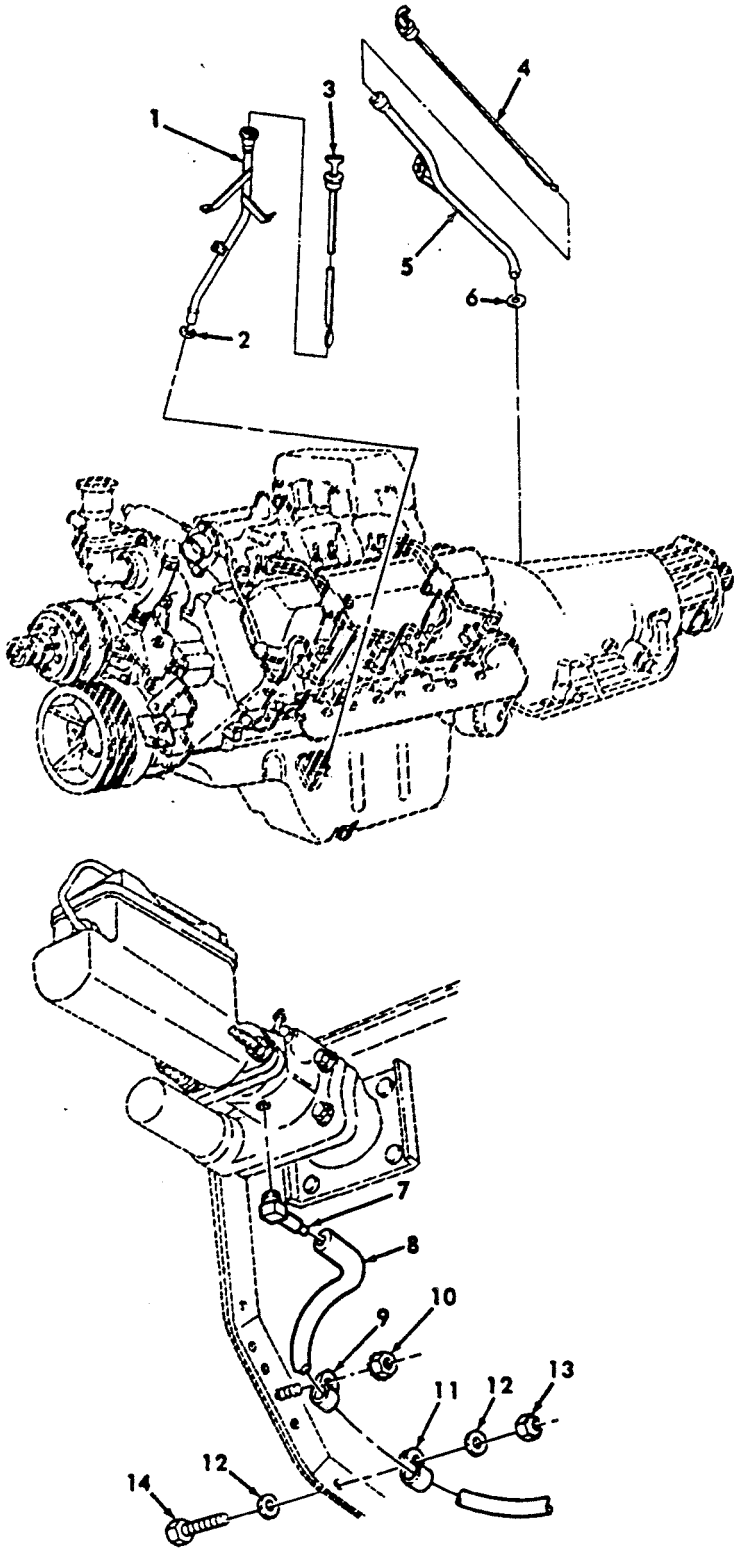

Figure 252. Deep Water Fording Kit, Hydro-Boost Vent Line, Engine and Transmission Dipstick, and Tube Assemblies.

(1) ITEM NO	(2) SMR CODE	(3) NSN	(4) CAGEC	(5) PART NUMBER	(6) DESCRIPTION AND USABLE ON CODES(UOC)	(7) QTY
					GROUP 3305 DEEP WATER FORDING KITS	
					FIG. 252 DEEP WATER FORDING KIT, HYDRO-BOOST VENT LINE,ENGINE AND TRANSMISSION DIPSTICK,AND TUBE ASSEMBLIES	
1	PFOZZ	4710012028245	19207	12339844	TUBE ASSEMBLY,METAL PART OF KIT P/N 57K3553..... UOC:XAA	1
2	PAOZZ	5331009359136	24617	274244	O-RING PART OF KIT P/N 57K3553..... UOC:XAA	1
3	PAOZZ	6680011853202	19207	12339846	GAGE ROD-CAP,LIQUID ENGINE PART OF 57K3553..... UOC:XAA	1
4	PAOZZ	6680014667238	19207	12460314	GAGE,ROD-CAP,LIQUID PART OF KIT P/N 57K3553..... UOC:XAA	1
5	PAOZZ	4710011794346	19207	12339147-2	TUBE,BENT METALLIC PART OF KIT P/N 57K3553..... UOC:XAA	1
6	PAOZZ	5330011846492	34623	5579324	PACKING,PREFORMED PART OF KIT P/N 57K3553..... UOC:XBB	1
7	PAOZZ	4730011953803	01989	1069X4X1	ELBOW,PIPE TO HOSE PART OF KIT P/N 57K3553..... UOC:XAA	1
8	MOOZZ		34623	5582644	TUBE MAKE FROM TUBE,P/N CPR104420-1 ,20 INCHES LONG PART OF KIT P/N 57K3553..... UOC:XAA	1
9	PAOZZ	5340000797837	96906	MS21333-67	CLAMP,LOOP PART OF KIT P/N 57K3553. UOC:XAA	1
10	PAOZZ	5310001249265	72582	271169	NUT,PLAIN ASSEMBLED PART OF KIT P/N 57K3553..... UOC:XAA	1
11	PAOZZ	5340008091490	96906	MS21333-98	CALMP,LOOP PART OF KIT P/N 57K3553. UOC:XAA	1
12	PAOZZ	5310011023270	24617	2436161	WASHER,FLAT 1/4 PART OF KIT P/N 57K3553..... UOC:XAA	2
* 13	PAOZZ	5310000614650	96906	M45913/3-4CG8C	NUT,SELF-LOCKING PART OF KIT P/N 57K3553..... UOC:XAA	1
14	PAOZZ	5305000680508	80204	B1821BH025C075N	SCREW,CAP HEXAGON 1/4-20 X 3/4 PART OF KIT P/N 57K3553..... UOC:XAA	1
*KIT	PDOZZ	2990014963766	19207	57K3553	MODIFICATION KIT,VE..... UOC:XAA	1
					ADAPTER,STRAIGHT,PI(1) 251-5	
					BRACKET,PIPE (1) 250-9	
					CAP,FILLER OPENING (1) 251-11	
					CAP,PROTECTIVE,DUST(1) 250-19	

(1) ITEM NO	(2) SMR CODE	(3) NSN	(4) CAGEC	(5) PART NUMBER	(6) DESCRIPTION AND USABLE ON CODES(UOC)	(7) QTY
					CLAMP,HOSE (4) 251-16	
					CLAMP,LOOP (2) 250-2	
					CLAMP,LOOP (1) 252-9	
					CLAMP,LOOP (1) 252-11	
					CUP,SENSOR,DEEP WAT(1) 251-12	
					ELBOW,PIPE TO HOSE (1) 251-3	
					ELBOW,PIPE TO HOSE (1) 251-20	
					ELBOW,PIPE TO HOSE (1) 252-7	
					GAGE,ROD-CAP,LIQUID(1) 252-3	
					GAGE,ROD-CAP,LIQUID(1) 252-4	
					GASKET (1) 250-15	
					HANGER,ENGINE EXHAU(2) 250-11	
					HOSE (1) 251-19	
					HOSE,NONMETALLIC (1) 250-20	
					HOSE,NONMETALLIC (1) 251-17	
					NUT,PLAIN ASSEMBLED(1) 252-10	
					NUT,PLAIN HEXAGON (1) 250-1	
					NUT,SELF-LOCKING,HE(5) 250-16	
					NUT,SELF-LOCKING,HE(8) 250-18	
					NUT,SELF-LOCKING,HE(4) 251-15	
					NUT,SELF-LOCKING,HE(1) 252-10	
					NUT,SELF-LOCKING,HE(1) 252-13	
					O-RING (1) 252-2	
					PACKING,PREFORMED (1) 252-6	
					PIPE,EXHAUST (1) 250-10	
					PLATE,IDENTIFICATIO(1) 251-1	
					SCREW,CAP HEXAGON H(8) 250-7	
					SCREW,CAP HEXAGON H(3) 250-13	
					SCREW,CAP HEXAGON H(2) 251-13	
					SCREW,CAP HEXAGON H(1) 252-14	
					SCREW,MACHINE (1) 250-6	
					SCREW,TAPPING THREA(1) 250-4	
					STRAP,LINE SUPPORTI(3) 251-9	
					TEE,HOSE (1) 251-7	
					TUBE (1) 251-8	
					TUBE (1) 251-10	
					TUBE (1) 252-8	
					TUBE ASSEMBLY,METAL(1) 252-1	
					TUBE,BENT METALLIC (1) 250-5	
					TUBE,BENT METALLIC (1) 252-5	
					TUBE,NONMETALLIC (1) 251-4	
					TUBE,NONMETALLIC (1) 251-6	
					VALVE,CROSS (1) 251-2	
					VALVE,VENT (1) 251-18	
					WASHER,FLAT (16) 250-8	
					WASHER,FLAT (2) 250-12	
					WASHER,FLAT (6) 250-14	
					WASHER,FLAT (2) 250-17	
					WASHER,FLAT (8) 251-14	
					WASHER,FLAT (2) 252-12	
					WASHER,LOCK (2) 250-3	

END OF FIGURE

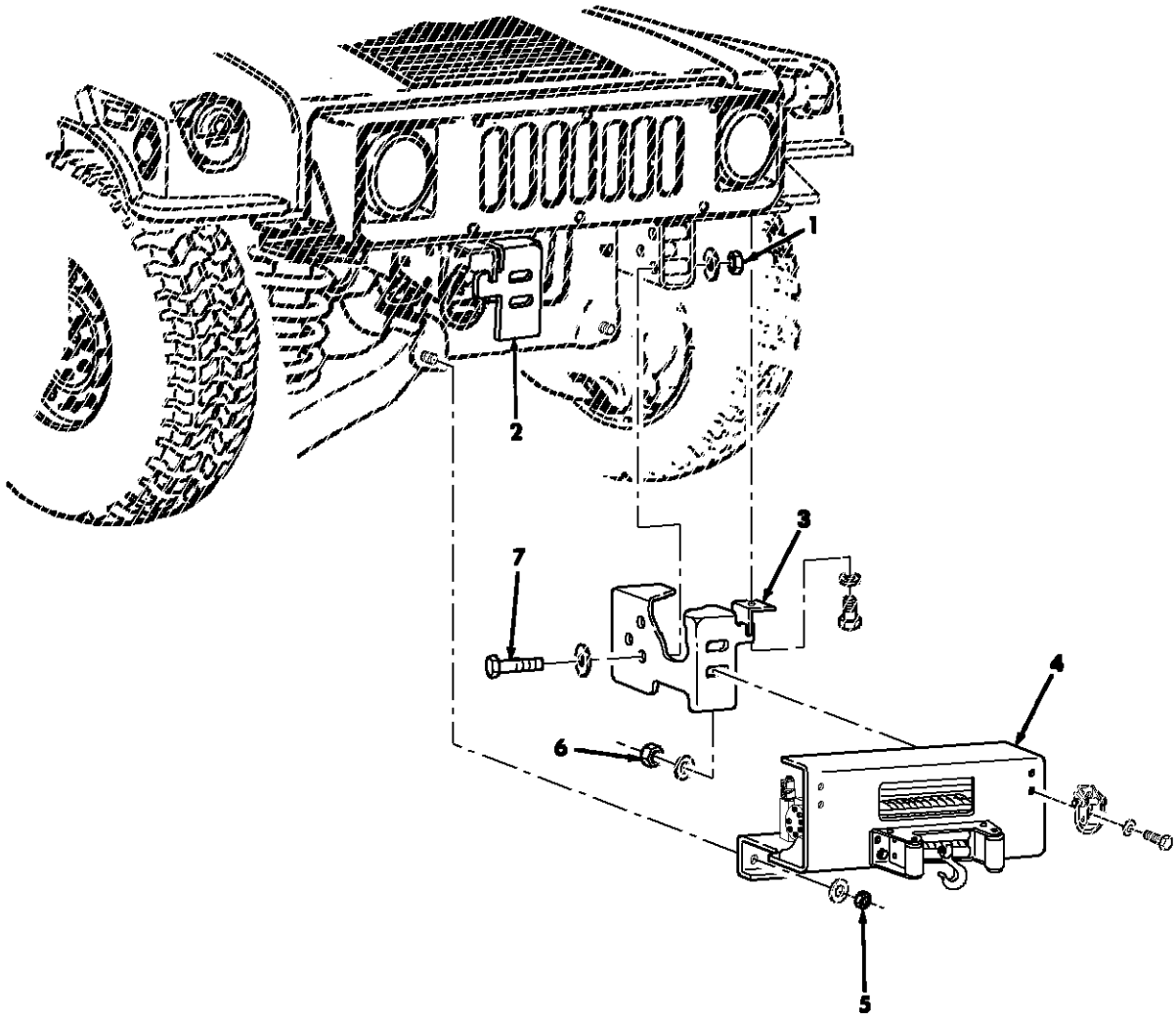

Figure 252A. Kit, Front Hydraulic Winch and Mounting Brackets (M1113).

(1) ITEM NO	(2) SMR CODE	(3) NSN	(4) CAGEC	(5) PART NUMBER	(6) DESCRIPTION AND USABLE ON CODES(UOC)	(7) QTY
					GROUP 3307 SPECIAL PURPOSE KITS	
					FIG. 252A KIT,FRONT HYDRAULIC WINCH AND MOUNTING BRACKETS (M1113)	
* 1	PAOZZ	5310000614651	96906	M45913/3-10CG8C	NUT,SELF-LOCKING,HE PART OF KIT P/N 57K3562..... UOC:XAA	6
* 2	PAOZZ	5340014870292	0GZB7	993-0003	BRACKET,MOUNTING R.H. PART OF KIT P/N 57K3562..... UOC:XAA	1
* 3	PAOZZ	5340014868886	0GZB7	993-00024	BRACKET,MOUNTING L.H. PART OF KIT P/N 57K3562..... UOC:XAA	1
* 4	KFOZZ		19207	12469359	WINCH AND BUMPER AS PART OF KIT P/N 57K3562..... UOC:XAA	1
* 5	PAOZZ	5310009353569	96906	MS51943-46	NUT,SELF-LOCKING,HE PART OF KIT P/N 57K3562..... UOC:XAA	2
* 6	PAOZZ	5310004883889	96906	MS51943-39	NUT,SELF-LOCKING,HE PART OF KIT P/N 57K3562..... UOC:XAA	1
* 7	PAOZZ	5305007427254	80204	B1821BH063C400N	SCREW,CAP HEXAGON H PART OF KIT P/N 57K3562..... UOC:XAA	6

END OF FIGURE

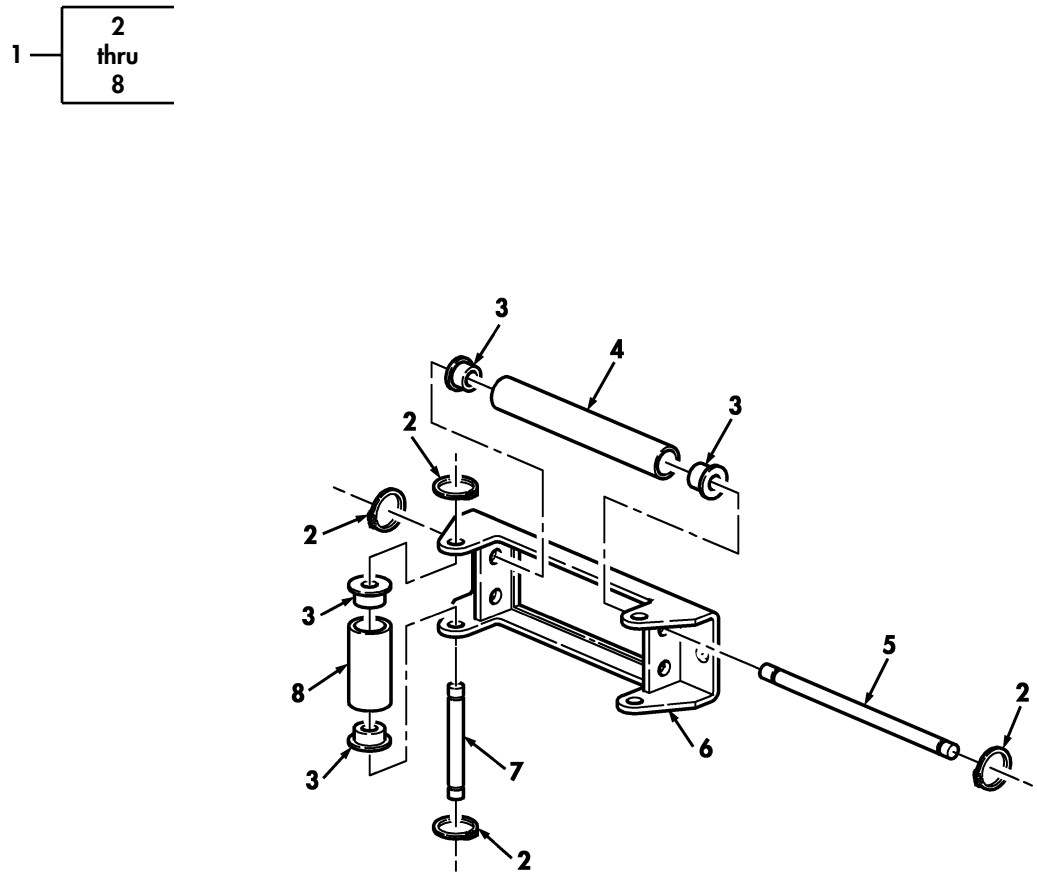

Figure 252B. Kit, Front Hydraulic Winch Fairlead Roller Assembly (M1113).

(1) ITEM NO	(2) SMR CODE	(3) NSN	(4) CAGEC	(5) PART NUMBER	(6) DESCRIPTION AND USABLE ON CODES(UOC)	(7) QTY
					GROUP 3307 SPECIAL PURPOSE KITS	
					FIG. 252B KIT,FRONT HYDRAULIC WINCH FAIRLEAD ROLLER ASSEMBLY (M1113)	
* 1	PAOZZ	2590014855455	0GZB7	983-WB-8	BRACKET,VEHICULAR C PART OF KIT P/N 57K3562..... UOC:XAA	1
* 2	PAOZZ		0GZB7	983-0070	.RING,RETAINING..... UOC:XAA	8
* 3	PAOZZ		0GZB7	983-WH8-4	.BUSHING..... UOC:XAA	8
* 4	PAOZZ		0GZB7	983-WH8-5	.TUBE..... UOC:XAA	2
* 5	PAOZZ		0GZB7	983-WH8-2	.SHAFT..... UOC:XAA	2
* 6	PAOZZ		0GZB7	983-WH8-1	.FRAME..... UOC:XAA	1
* 7	PAOZZ		0GZB7	983-WH8-3	.SHAFT..... UOC:XAA	2
* 8	PAOZZ		0GZB7	983-WH8-6	.TUBE..... UOC:XAA	2

END OF FIGURE

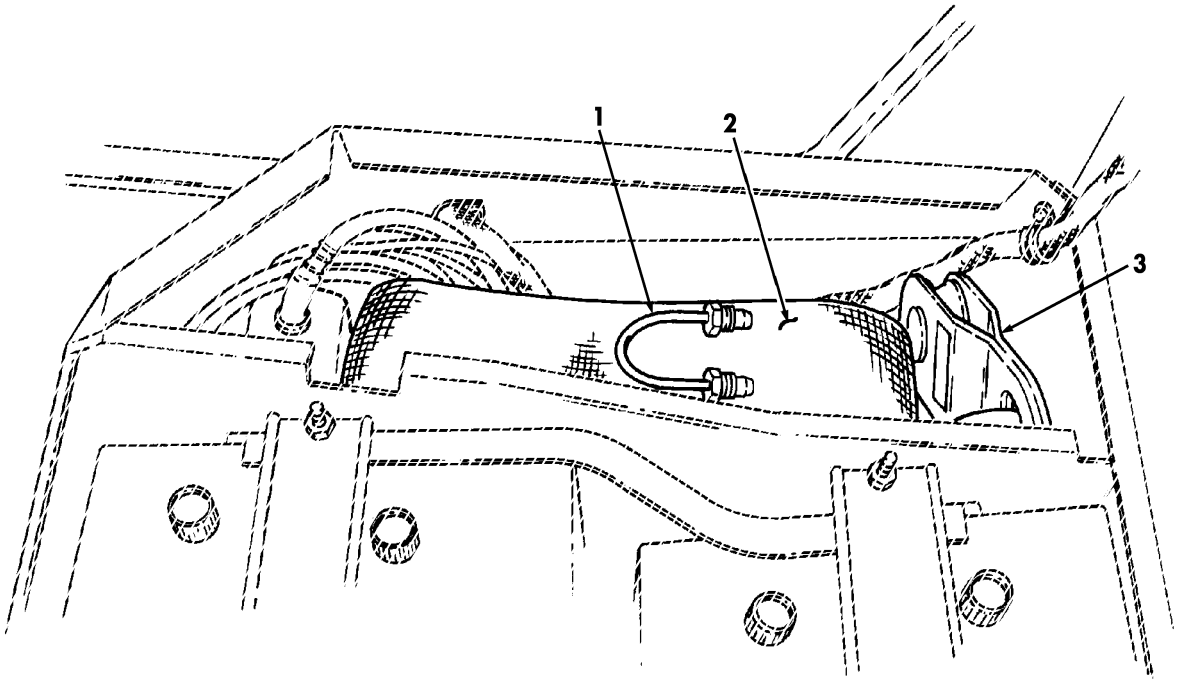

Figure 252C. Kit, Front Hydraulic Winch Bypass Tube and Snatch Block (M1113).

(1) ITEM NO	(2) SMR CODE	(3) NSN	(4) CAGEC	(5) PART NUMBER	(6) DESCRIPTION AND USABLE ON CODES(UOC)	(7) QTY
					GROUP 3307 SPECIAL PURPOSE KITS	
					FIG. 252C KIT,FRONT HYDRAULIC WINCH BYPASS TUBE AND SNATCH BLOCK (M1113)	
* 1	PAOZZ	4710014753753	0GZB7	983-90-50201	TUBE ASSEMBLY,METAL PART OF KIT P/N 57K3562..... UOC:XAA	1
* 2	PAOZZ	5340014753650	0GZB7	983-60-50089	STRAP,WEBBING PART OF KIT P/N 57K3562..... UOC:XAA	1
* 3	PAOZZ	2940014754983	0GZB7	983-60-50085A	BLOCK,TACKLE PART OF KIT P/N 57K3562 UOC:XAA	1

END OF FIGURE

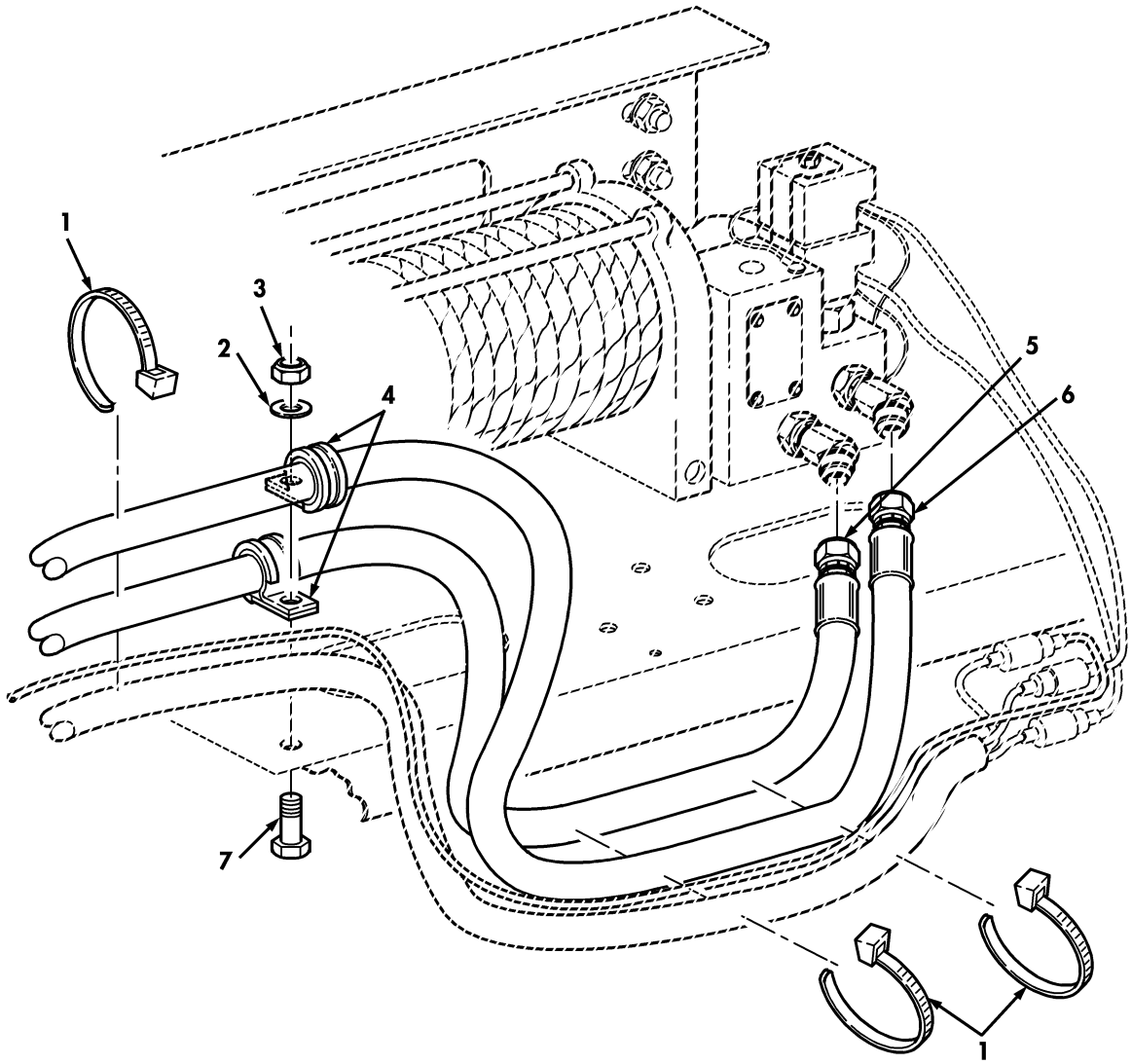

Figure 252D. Kit, Front Hydraulic Winch Hoses and Related Parts (M1113) (Sheet 1 of 2).

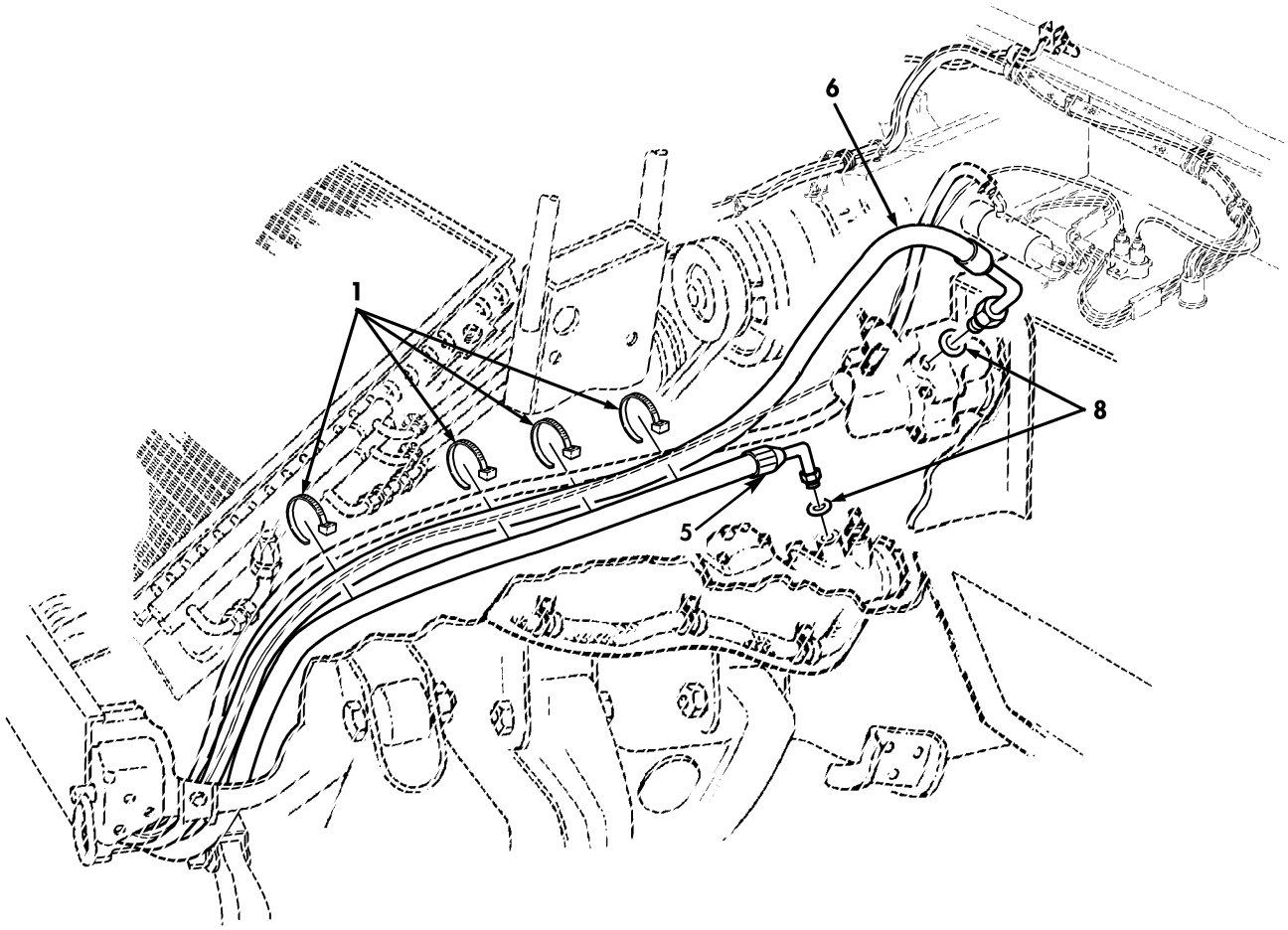

Figure 252D. Kit, Front Hydraulic Winch Hoses and Related Parts (M1113) (Sheet 2 of 2).

(1) ITEM NO	(2) SMR CODE	(3) NSN	(4) CAGEC	(5) PART NUMBER	(6) DESCRIPTION AND USABLE ON CODES(UOC)	(7) QTY
					GROUP 3307 SPECIAL PURPOSE KITS	
					FIG. 252D KIT,FRONT HYDRAULIC WINCH HOSES AND RELATED PARTS (M1113)	
* 1	PAOZZ	5975009846582	81343	MS3367-1-0	STRAP,TIEDOWN ELECT PART OF KIT P/N 57K3562..... UOX:XAA	7
* 2	PAOZZ	5310011036042	24617	120392	WASHER,FLAT PART OF KIT P/N 57K3562 UOC:XAA	1
* 3	PAOZZ	5301000614650	96906	MS51943-31	NUT,SELF-LOCKING,HE PART OF KIT P/N 57K3562..... UOC:XAA	1
* 4	PAOZZ	5340009848541	96906	MS21333-106	CLAMP,LOOP PART OF KIT P/N 57K3562. UOC:XAA	2
* 5	PAOZZ	4720014865249	01276	FK3727GGJ0630AA	HOSE ASSEMBLY,NONME PART OF KIT P/N 57K3562..... UOC:XAA	1
* 6	PAOZZ	4720014862581	01276	FK3727GGG0744AA	HOSE ASSEMBLY,NONME PART OF KIT P/N 57K3562..... UOC:XAA	1
* 7	PAOZZ	5305002253843	80204	B1821BH025C100N	SCCREW,CAP HEXAGON H PART OF KIT P/N 57K3562..... UOC:XAA	1
* 8	PAOZZ	5331005806586	02697	2-011N674-70	O-RING..... UOC:XAA	2

END OF FIGURE

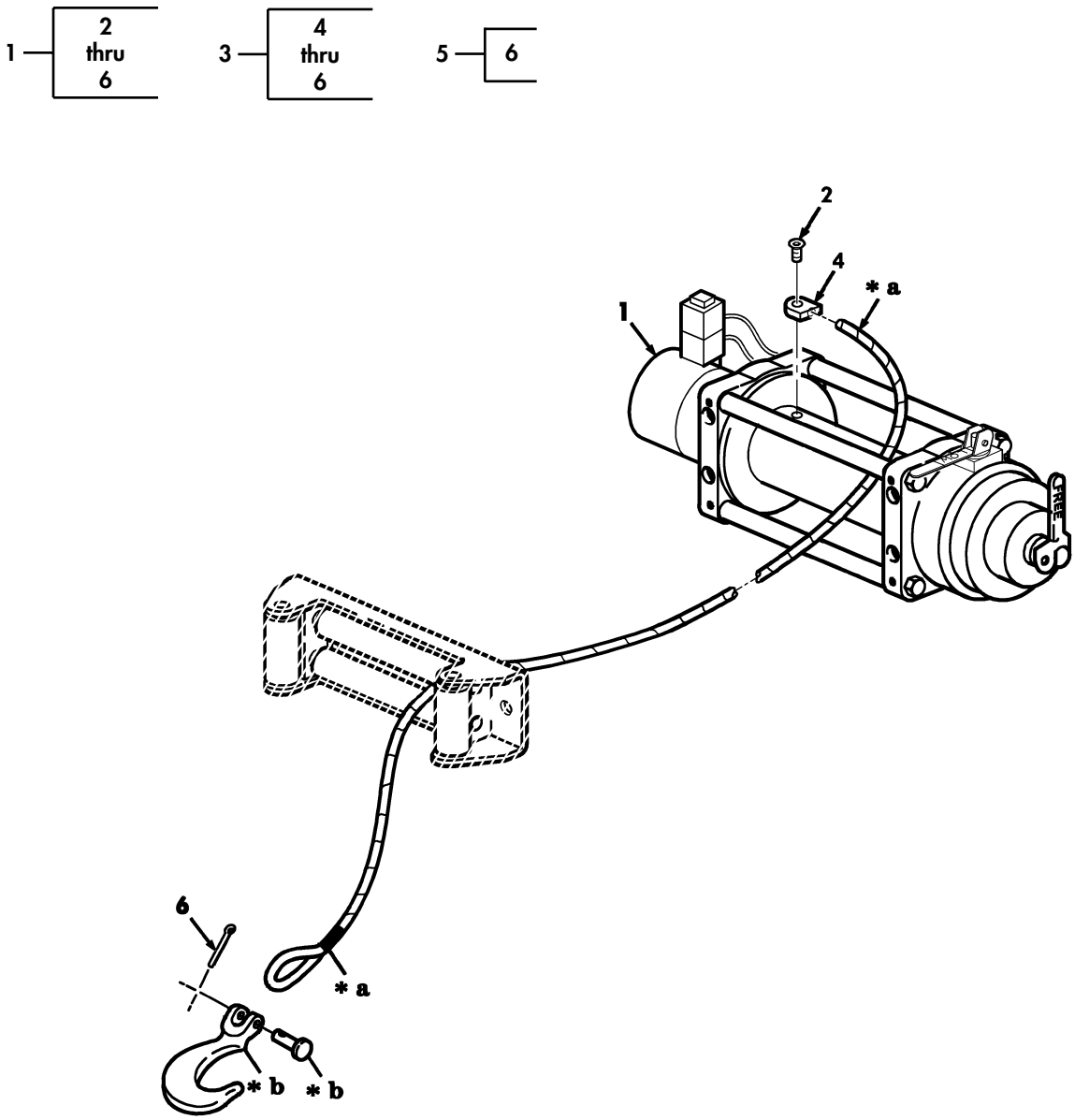

* **a** PART OF FIGURE 3
* **b** PART OF FIGURE 5

Figure 252E. Front Hydraulic Winch Assembly (M1113).

(1) ITEM NO	(2) SMR CODE	(3) NSN	(4) CAGEC	(5) PART NUMBER	(6) DESCRIPTION AND USABLE ON CODES(UOC)	(7) QTY
					GROUP 3307 SPECIAL PURPOSE KITS	
					FIG. 252E FRONT HYDRAULIC WINCH ASSEMBLY (M1113)	
* 1	PAOZZ	2950014943532	0GZB7	993-75-5005CV	WINCH,DRUM,VEHICULE..... UOC:XAA	1
* 2	PAOZZ	5305014952914	0GZB7	983-90-50115	.SCREW,CAP,SOCKET H..... UOC:XAA	2
* 3	PAOZZ	4010014963987	0GZB7	983-19-50025	.WIRE ROPE ASSEMBLY..... UOC:XAA	1
* 4	PAOZZ		0GZB7	983-19-50711	..CLAMP,CABLE..... UOC:XAA	1
* 5	PAOZZ		0GZB7	983-19-51202	..HOOK ASSEMBLY..... UOC:XAA	1
* 6	PAOZZ	5315000120123	96906	MS24665-355	...PIN,COTTER..... UOC:XAA	1

END OF FIGURE

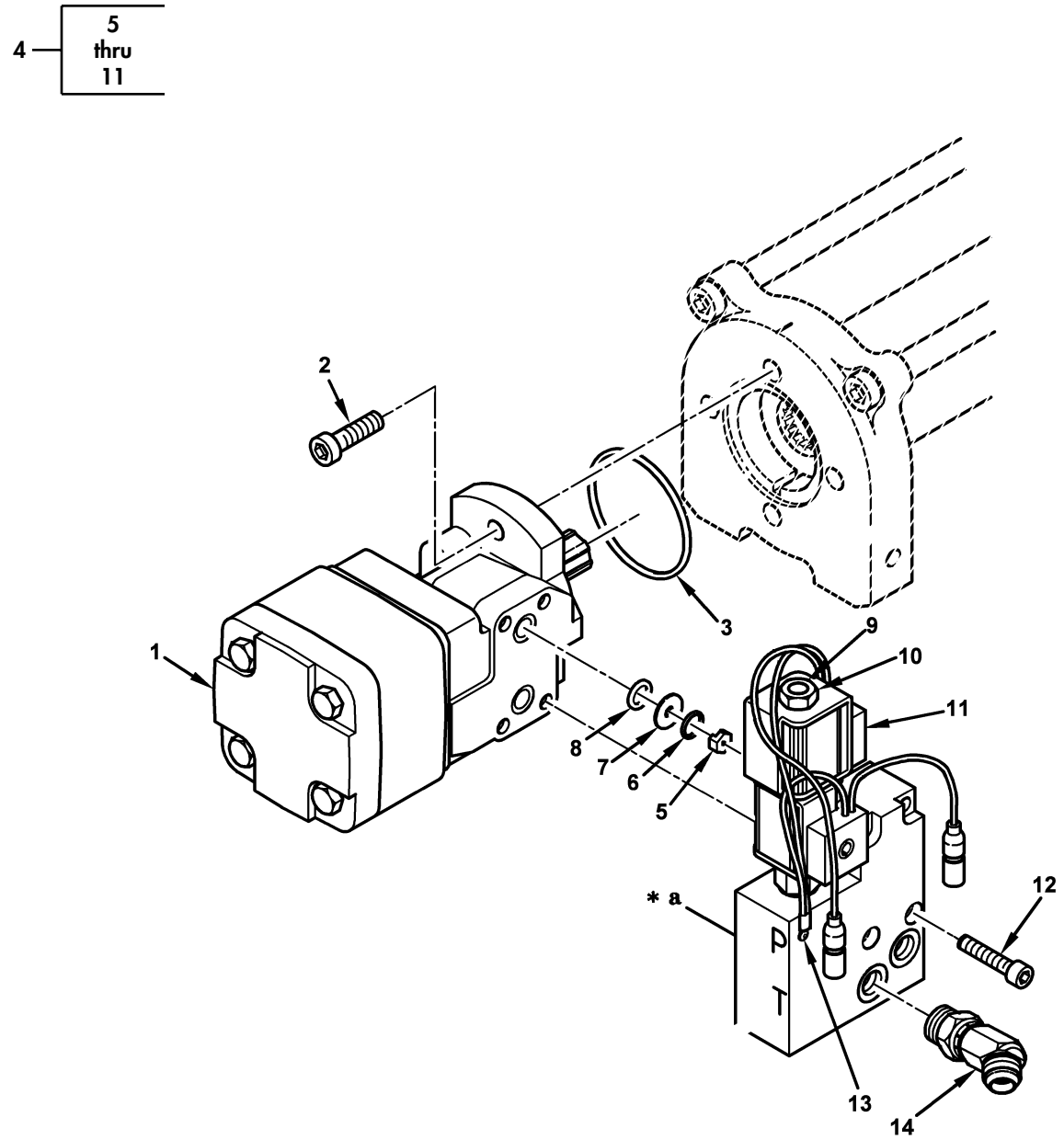

✻ **a** PART OF ITEM 4

Figure 252F. Front Hydraulic Winch Motor, Valve Body, and Related Parts (M113).

(1) ITEM NO	(2) SMR CODE	(3) NSN	(4) CAGEC	(5) PART NUMBER	(6) DESCRIPTION AND USABLE ON CODES(UOC)	(7) QTY
					GROUP 3307 SPECIAL PURPOSE KITS	
					FIG. 252F FRONT HYDRAULIC WINCH MOTOR,VALVE BODY,AND RELATED PARTS (M1113)	
* 1	PAFZZ	2540014963466	0GZB7	993-97-50071	MOTOR,HYDRAULIC..... UOC:XAA	1
* 2	PAFZZ	5305001879934	96906	MS16697-142	SCREW,CAP HEXAGON H..... UOC:XAA	2
* 3	PAFZZ	5331004519005	0E9N0	A395X55	O-RING..... UOC:XAA	1
* 4	PAFZZ		0GZB7	993-0065	VALVE BODY..... UOC:XAA	1
* 5	PAFZZ	4730014955135	0GZB7	9P000233/8	.VALVE,RESTRICT..... UOC:XAA	1
* 6	PAFZZ	5331005806586	34623	12340395	.O-RING..... UOC:XAA	1
* 7	PAFZZ		0GZB7	9DD00667	.WASHER..... UOC:XAA	1
* 8	PAFZZ	5330014950145	0GZB7	PS18022	.O-RING..... UOC:XAA	1
* 9	PAFZZ		0GZB7	983-0027	.SOLENOID,ELECT..... UOC:XAA	1
* 10	PAFZZ	5310014958545	0GZB7	983-007	.NUT,PLAIN HEXAGON..... UOC:XAA	1
* 11	PAFZZ	5945014950483	0GZB7	CAP024L-1	.SOLENOID ELECT..... UOC:XAA	1
* 12	PAFZZ	5305014951670	0GZB7	983-90-50121	SCREW,CAP SOCKET H..... UOC:XAA	4
* 13	PAFZZ	5305014952916	0GZB7	983-90-50123	SCREW..... UOC:XAA	1
* 14	PAFZZ		0GZB7	2061-8-6S	FITTING..... UOC:XAA	2

END OF FIGURE

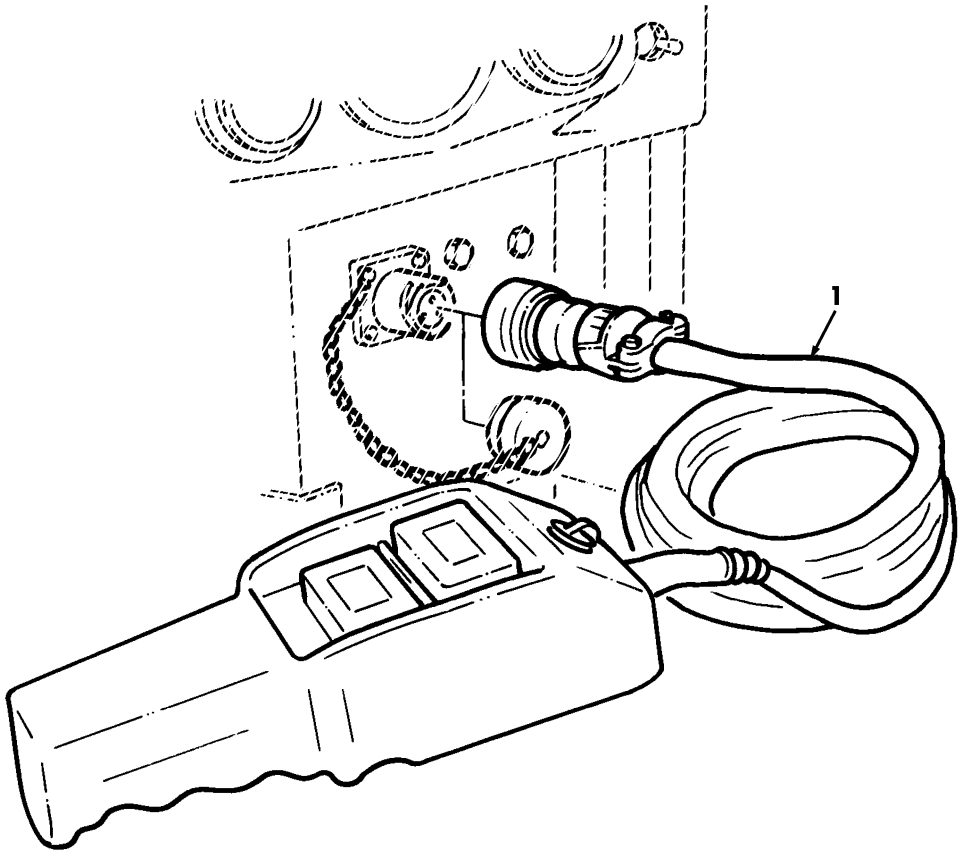

Figure 252G. Kit, Front Hydraulic Winch Controller (M1113).

(1) ITEM NO	(2) SMR CODE	(3) NSN	(4) CAGEC	(5) PART NUMBER	(6) DESCRIPTION AND USABLE ON CODES(UOC)	(7) QTY
					GROUP 3307 SPECIAL PURPOSE KITS	
					FIG. 252G KIT,FRONT HYDRAULIC WINCH CONTROLLER (M1113)	
* 1	PAOZZ	6150014863606	19207	12469064-1	CABLE ASSEMBLY,SPEC PART OF KIT P/N 57K3562..... UOC:XAA	1

END OF FIGURE

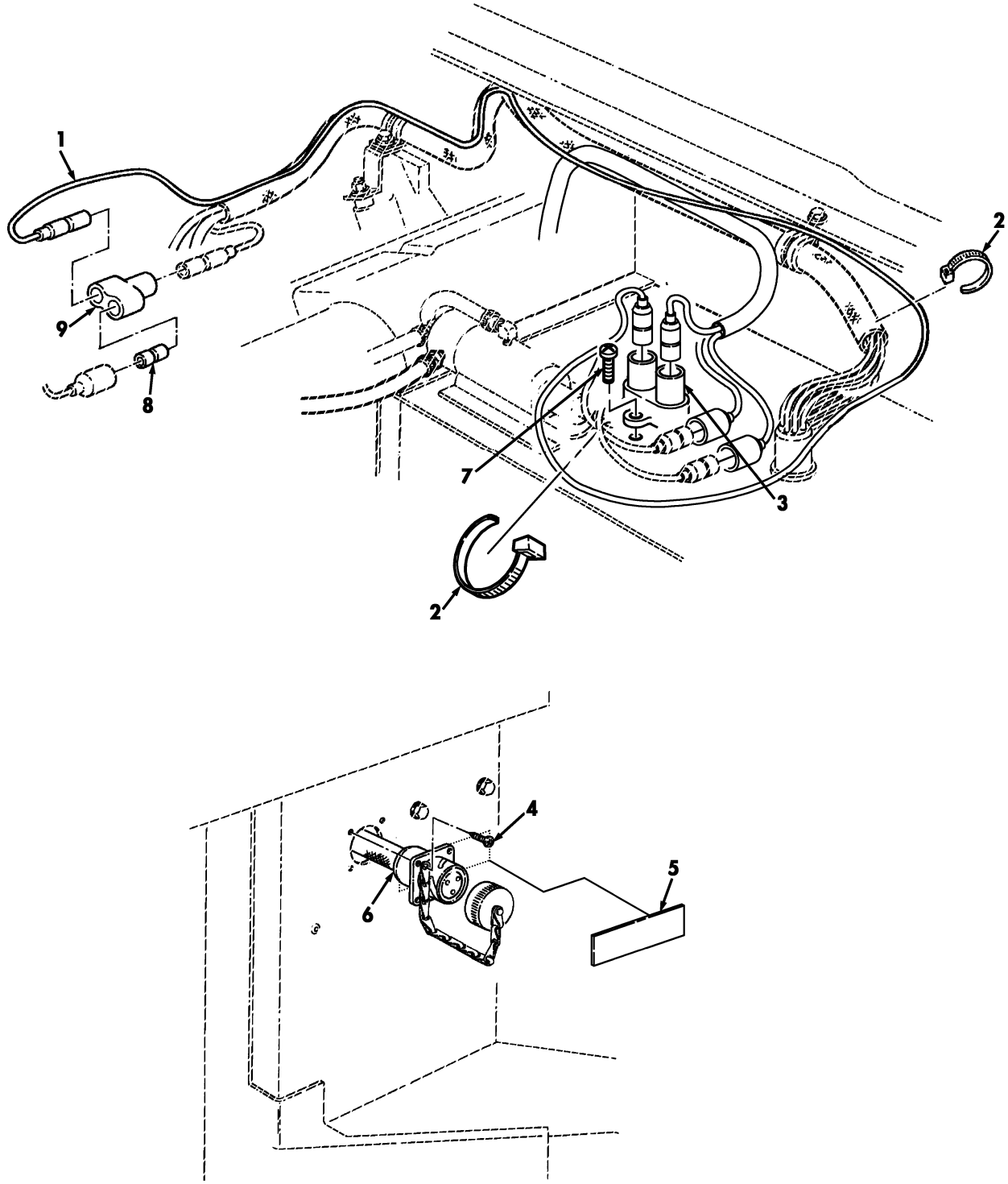

Figure 252H. Kit, Front Hydraulic Winch Controller Plug Harness (M1113).

(1) ITEM NO	(2) SMR CODE	(3) NSN	(4) CAGEC	(5) PART NUMBER	(6) DESCRIPTION AND USABLE ON CODES(UOC)	(7) QTY
					GROUP 3307 SPECIAL PURPOSE KITS	
					FIG. 252H KIT,FRONT HYDRAULIC WINCH CONTROLLER PLUG HARNESS (M1113)	
* 1	PAOZZ	6150014731169	19207	12469065-1	LEAD,ELECTRICAL PART OF KIT P/N 57K3562..... UOC:XAA	1
* 2	PAOZZ	5975009846582	96906	MS3367-1-0	STRAP,TIEDOWN PART OF KIT P/N 57K3562..... UOC:XAA	3
* 3	PAOZZ	5925014302318	58536	AA55571/01-001	CIRCUIT BREAKER PART OF KIT P/N 57K3562..... UOC:XAA	1
* 4	PAOZZ	5305000520881	80205	MS24630-13	SCREW PART OF KIT P/N 57K3562..... UOC:XAA	4
* 5	PAOZZ	7690014745928	19207	12469066	MARKER,IDENTIFICATION PART OF KIT P/N 57K3562..... UOC:XAA	1
* 6	PAOZZ	6150014863606	34623	12469064-1	CABLE ASSEMBLY,SPEC PART OF KIT P/N 57K3562..... UOC:XAA	1
* 7	PAOZZ	5305014783387	24617	449617	SCREW,TAPPING PART OF KIT P/N 57K3562..... UOC:XAA	2
* 8	PAOZZ	5935008074109	19207	8741492	ADAPTER,CONNECTOR PART OF KIT P/N 57K3562..... UOC:XAA	1
* 9	PAOZZ	5935009006281	96906	MS27147-1	ADAPTER,CONNECTOR PART OF KIT P/N 57K3562..... UOC:XAA	1
*KIT	PAOZZ	2590014805656	19207	57K3562	PARTS KIT,WINCH..... UOC:XAA	1
					ADAPTER,CONNECTOR (1) 252H-8	
					ADAPTER,CONNECTOR (1) 252H-9	
					BLOCK,TACKLE (1) 252C-3	
					BRACKET,MOUNTING (1) 252A-2	
					BRACKET,MOUNTING (1) 252A-3	
					BRACKET,VEHICLE (1) 252B-1	
					CABLE ASSEMBLY (1) 252G-1	
					CABLE ASSEMBLY (1) 249H-1	
					CIRCUIT BREAKER (1) 249H-3	
					CLAMP,LOOP (2) 252D-4	
					HOSE ASSEMBLY,NONMETALLI (1) 252D-5	
					HOSE ASSEMBLY,NONMETALLI (1) 252D-6	
					LEAD,ELECTRICAL (1) 249H-1	
					MARKER,IDENTIFICATION (1) 249H-5	
					NUT,SELF-LOCKING,HE (6) 252A-1	
					NUT,SELF-LOCKING,HE (2) 252A-5	
					NUT,SELF-LOCKING,HE (1) 252A-6	
					NUT,SELF-LOCKING,HE (1) 252D-3	
					SCREW (4) 249H-4	
					SCREW,CAP HEXAGON H (6) 252A-7	

(1) ITEM NO	(2) SMR CODE	(3) NSN	(4) CAGEC	(5) PART NUMBER	(6) DESCRIPTION AND USABLE ON CODES(UOC)	(7) QTY
					SCREW,CAP HEXAGON H (1)	252D-7
					SCREW,TAPPING (2)	252H-7
					STRAP,TIEDOWN (3)	249H-2
					STRAP,TIEDOWN ELECT (7)	252D-1
					STRAP,WEBBING (1)	252C-2
					TUBE ASSEMBLY,METAL (1)	252C-1
					WASHER,FLAT (1)	252D-2
					WINCH AND BUMPER ASSEMBL(1)	252A-4

END OF FIGURE

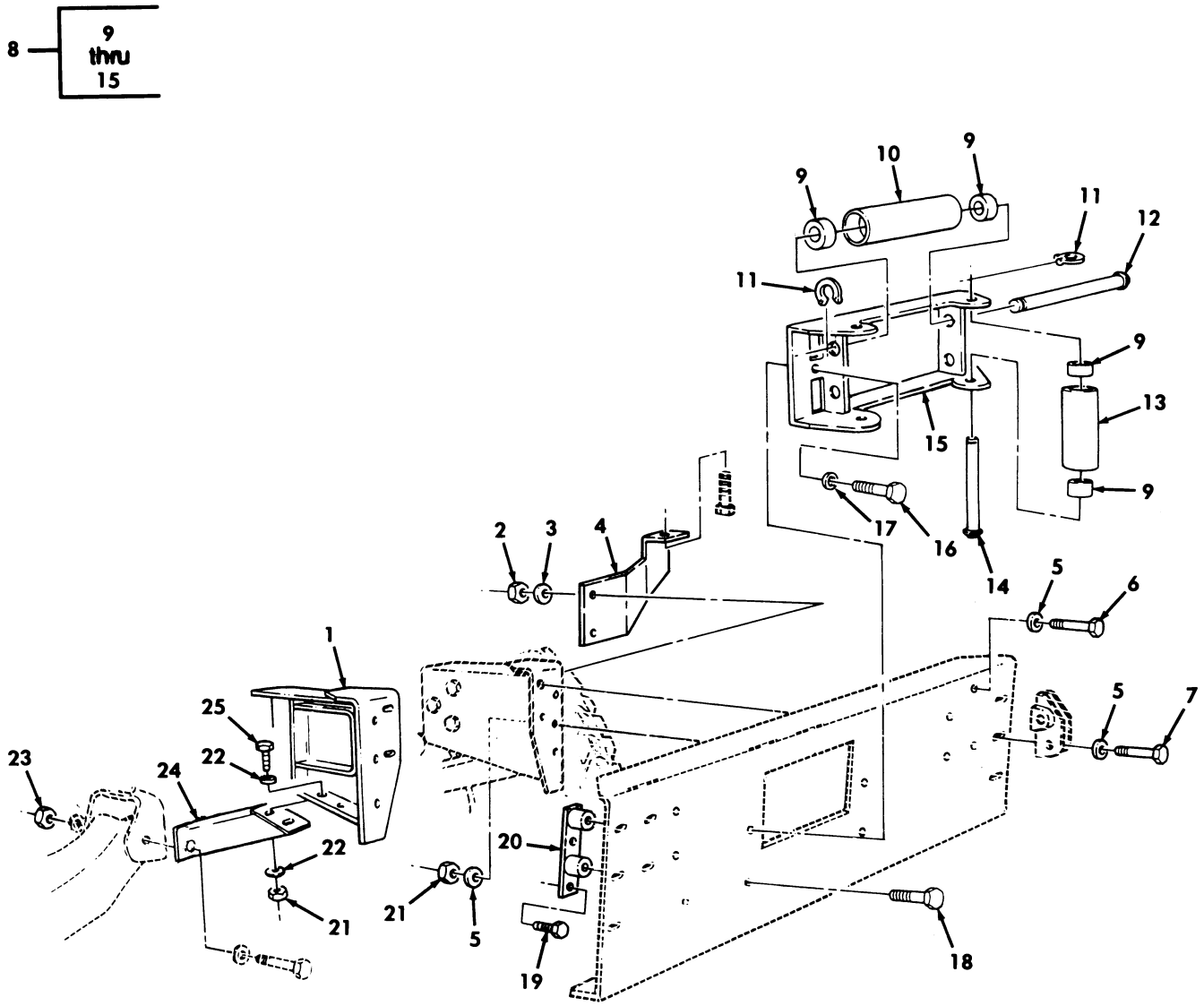

Figure 253. Front Winch Mounting Brackets and Related Parts.

(1) ITEM NO	(2) SMR CODE	(3) NSN	(4) CAGEC	(5) PART NUMBER	(6) DESCRIPTION AND USABLE ON CODES(UOC)	(7) QTY
					GROUP 3307 HOIST,CAPSTAN,WINDLASS, CRANE OR WINCH ASSEMBLY	
					FIG. 253 FRONT WINCH MOUNTING BRACKETS AND RELATED PARTS	
1	PFOZZ	2510013581178	19207	12342387	FRAME SECTION,STRUC L.H..... UOC:XAA	1
1	PFOZZ	2510013581178	19207	12342388	FRAME SECTION,STRUC R.H..... UOC:XAA	1
2	PAOZZ	5310004883889	96906	MS51943-39	NUT,SELF-LOCKING,HE 1/2-13..... UOC:XAA	10
3	PAOZZ	5310011211703	11862	2436165	WASHER,FLAT 1/2..... UOC:XAA	14
4	PAOZA	5340014728859	34623	RCSK17806-1	BRACKET,MOUNTING L.H..... UOC:XAA	1
4	PAOZA	5340014728865	34623	RCSK17806-2	BRACKET,MOUNTING R.H..... UOC:XAA	1
5	PAOZZ	5310008664417	19200	10910174-5	WASHER,FLAT .531..... UOC:XAA	6
6	PAOZZ	5305000712070	80204	B1821BH050C175N	SCREW,CAP,HEXAGON H 1/2-13 X 1.75.. UOC:XAA	4
7	PAOZZ	5305000712069	80204	B1821BH050C150N	SCREW,CAP,HEXAGON H 1/2-13 X 1.50.. UOC:XAA	6
8	PAOZZ	2590014486351	19207	12447104	BRACKET,VEHICULAR C..... UOC:XAA	1
9	PAOZZ	3120014400043	19207	12447058	.BUSHING,SLEEVE..... UOC:XAA	8
10	PAOZZ	3120014486269	19207	12447057-1	.ROLLER,LINEAR-ROTOR..... UOC:XAA	2
11	PAOZZ	5325013882363	96906	MS3217-2075	.RING,RETAINING..... UOC:XAA	8
12	PAOZZ	3040014779645	19207	12447060-1	.SHAFT,STRAIGHT..... UOC:XAA	2
13	PAOZZ	3120014486268	19207	12447057-2	.ROLLER,LINEAR-ROTAR..... UOC:XAA	2
14	PAOZZ	3040014443350	34623	12447060-2	.SHAFT,STRAIGHT..... UOC:XAA	2
15	PAOZZ	2590014443399	34623	12447088	.BRACKET,VEHICULAR C..... UOC:XAA	1
16	PAOZZ	5305009265518	80204	B1821BH044C325N	SCREW,CAP,HEXAGON H 7/16-14 X 3.25. UOC:XAA	2
17	PAOZZ	5310012577590	96906	MS51412-7	WASHER,FLAT 7/16..... UOC:XAA	2
18	PAOZZ	5305000712061	80204	B1821BH044C300N	SCREW,CAP,HEXAGON H 7/16-14 X 3.00. UOC:XAA	2
19	PAOZZ	5305000711785	80204	B1821BH044C088N	SCREW,CAP,HEXAGON H 7/16-14 X .875. UOC:XAA	4
20	PAOZA	5340014729381	34623	RCSK17849	BRACKET,MOUNTING..... UOC:XAA	1
21	PAOZZ	5310009359021	96906	MS51943-35	NUT,SELF-LOCKING,HE 3/8-16..... UOC:XAA	4
22	PAOZZ	5310014124013	24617	2436163	WASHER,FLAT 3/8.....	8

(1) ITEM NO	(2) SMR CODE	(3) NSN	(4) CAGEC	(5) PART NUMBER	(6) DESCRIPTION AND USABLE ON CODES(UOC)	(7) QTY
					UOC:XAA	
23	PAOZZ	5310004093333	96906	MS51943-45	NUT,SELF-LOCKING,HE 3/4-10.....	2
					UOC:XAA	
24	PAOZZ	2590014753179	34623	RCSK17856	BRACE,WINCH L.H.....	1
					UOC:XAA	
* 24	PAOZZ		34623	6013970	FRAME SECTION,STRUC R.H.....	1
					UOC:XAA	
25	PAOZZ	5305011409118	80204	B1821BH038C088N	BOLT,MACHINE 3/8-16 X .875.....	4
					UOX:XAA	

END OF FIGURE

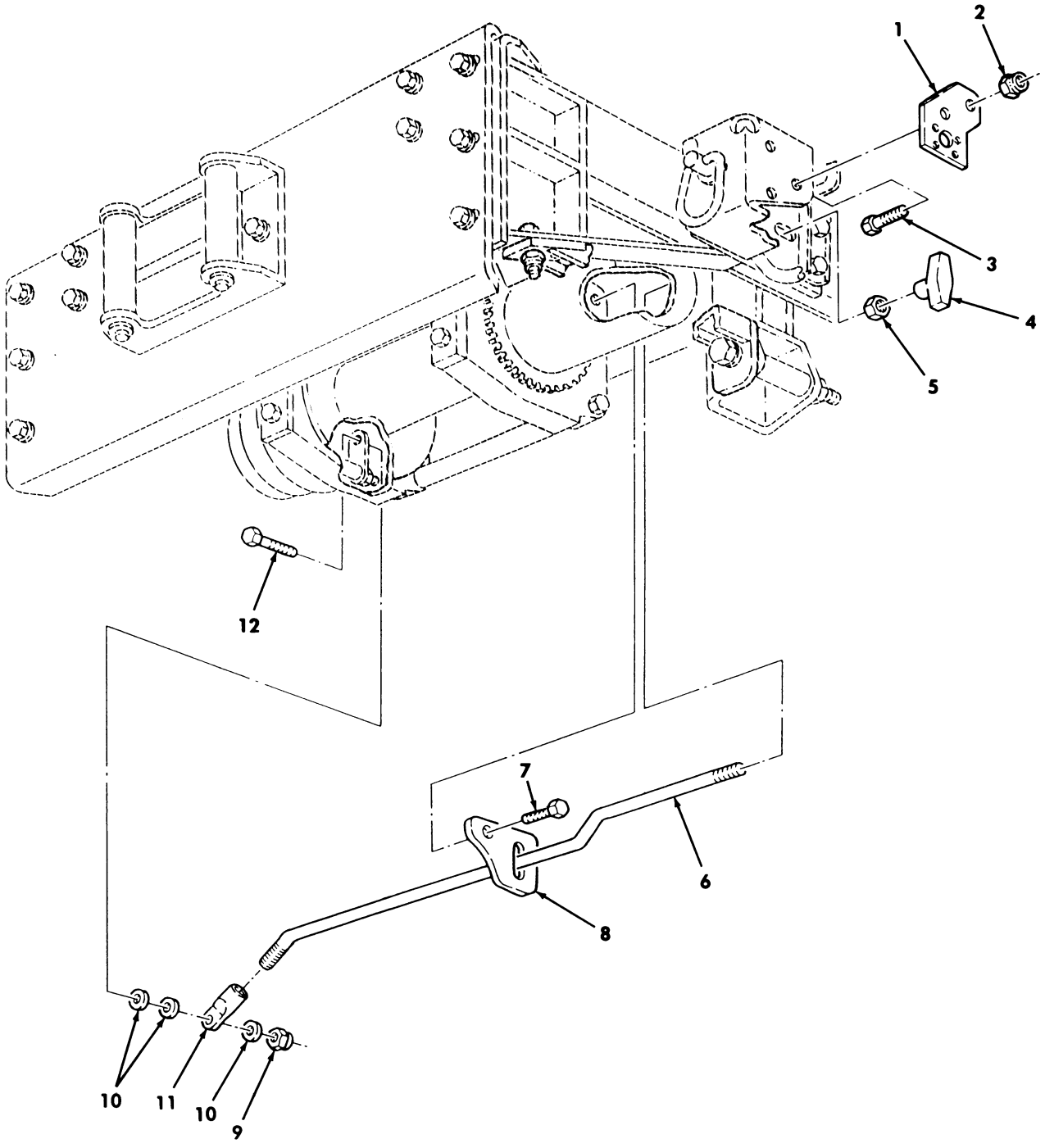

Figure 254. Front Winch Clutch Control.

(1) ITEM NO	(2) SMR CODE	(3) NSN	(4) CAGEC	(5) PART NUMBER	(6) DESCRIPTION AND USABLE ON CODES(UOC)	(7) QTY
					GROUP 3307 HOIST,CAPSTAN,WINDLASS, CRANE, OR WINCH ASSEMBLY	
					FIG. 254 FRONT WINCH CLUTCH CONTROL	
1	PAOZZ	5340014731614	34623	EX4403	BRACKET,MOUNTING CONTROL MOUNTING.. UOC:XAA	1
2	PAOZZ	5310012157311	96906	MS51943-13	NUT,SELF-LOCKING,HE 5/8-11..... UOC:XAA	2
3	PAOZZ	5305007247219	80204	B1821BH063C125N	SCREW,CAP,HEXAGON H 5/8-11 X 1.25.. UOC:XAA	2
4	PAOZZ	5355014722179	99862	CL-654-TK	TEE-HANDLE CABLE END WINCH CLUTCH ACTUATOR..... UOC:XAA	1
5	PAOZZ	5310007320559	96906	MS51968-8	NUT,PLAIN,HEXAGON .375-24..... UOC:XAA	1
6	PAOZZ	5306014732641	34623	RCSK18122	ROD,THREADED END..... UOC:XAA	1
7	PAOZZ	5305006882111	80204	B1821BH038C138N	SCREW,CAP,HEXAGON H .375-16 X 1.313 UOC:XAA	1
8	PAOZZ	5340014731717	34623	RCSK18124	PLATE,MOUNTING..... UOC:XAA	1
9	PAOZZ	5310012134174	27647	6779	NUT,SELF-LOCKING,HE 3/8-16..... UOC:XAA	1
10	PAOZZ	5310014742938	27647	11524	WASHER,FLAT..... UOC:XAA	3
11	PAOZZ	5307014732757	27646	25671	BALL JOINT ROD END..... UOC:XAA	1
12	PAOZZ	5305007252317	80204	B1821BH038C150N	SCREW,CAP,HEXAGON H 3/8-16 X 1-1/2. UOC:XAA	1

END OF FIGURE

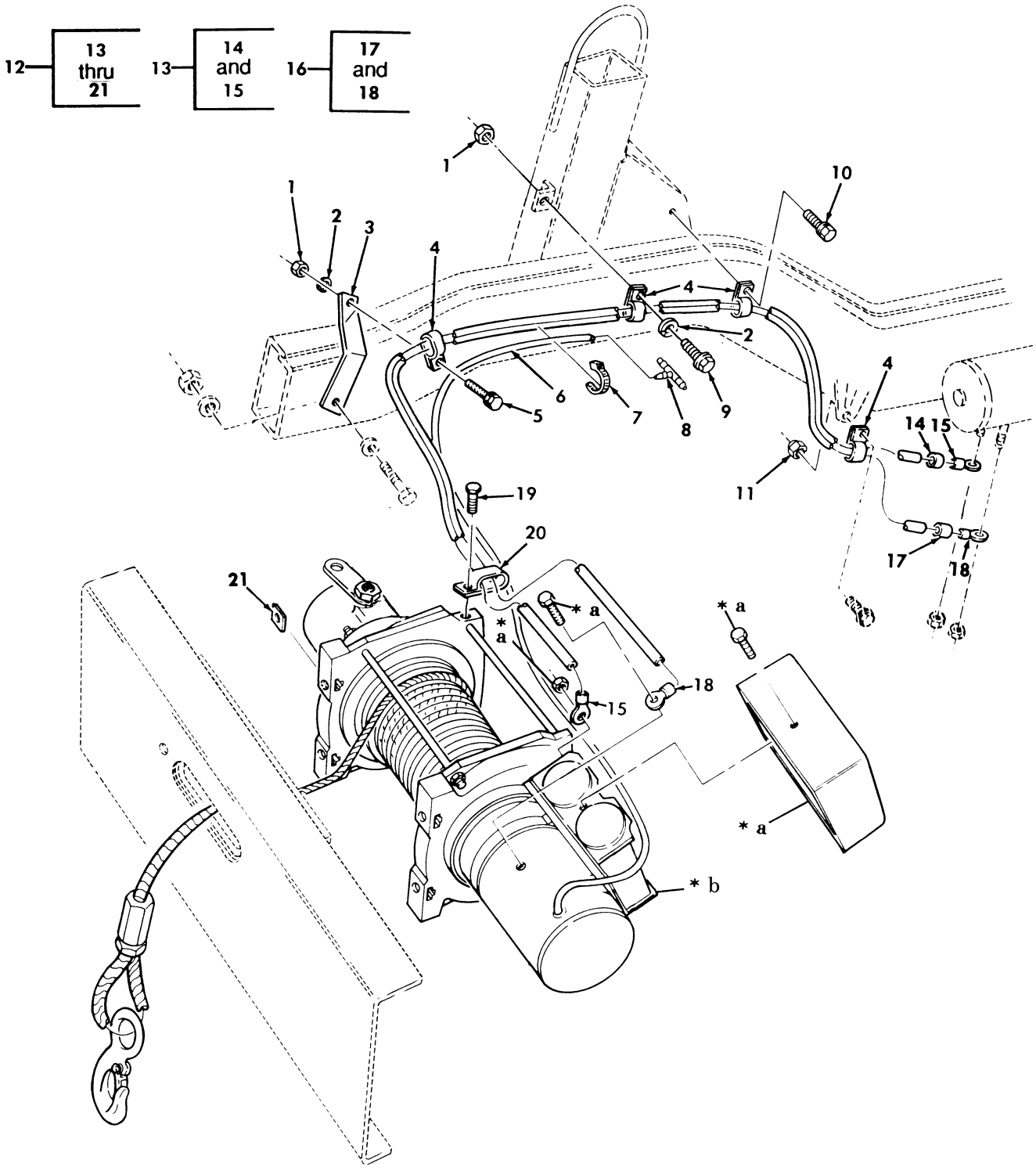

* **a** PART OF ITEM 12
* **b** FOR BREAKDOWN, SEE FIGURE 260

Figure 255. Front Winch Assembly, Mounting Hardware, and Related Parts.

(1) ITEM NO	(2) SMR CODE	(3) NSN	(4) CAGEC	(5) PART NUMBER	(6) DESCRIPTION AND USABLE ON CODES(UOC)	(7) QTY
					GROUP 3307 SPECIAL PURPOSE KITS	
					FIG. 255 FRONT WINCH ASSEMBLY AND RELATED PARTS	
1	PAOZZ	5310009050762	96906	MS51967-3	NUT,PLAIN HEXAGON 1/4-20..... UOC:XAA	2
* 2	PAOZZ	5310005825965	80205	MS35338-44	WASHER,LOCK 1/4..... UOC:XAA	2
3	PFOZZ	5340012669173	19207	12338481	BRACKET,DOUBLE ANGL..... UOC:XAA	1
4	PAOZZ	5340004381833	19207	7721654	CLAMP,LOOP..... UOC:XAA	4
5	PAOZZ	5305009881725	96906	MS35206-281	SCREW,MACHINE 1/4-20 X 3/4..... UOC:XAA	1
6	MOOZZ		19207	CPR104420-1-70	TUBING,NONMETALLIC MAKE FROM TUBING,P/N CPR104420-1,70 INCHES LONG..... UOC:XAA	1
7	PAOZZ	5975011113208	96906	MS3367-5-9	STRAP,TIEDOWN ELECT..... UOC:XAA	4
8	PAOZZ	4730010035105	19207	12339973-1	TEE,HOSE..... UOC:XAA	1
9	PAOZZ	5305000380502	96906	MS90725-6	SCREW,CAP HEXAGON H 1/4-20 X 3/4... UOC:XAA	1
10	PAOZZ	5305001913640	96906	MS51851-85	SCREW,TAPPING 1/4-20 X 5/8..... UOC:XAA	1
11	PAOZZ	5310011520598	24617	271172	NUT,SELF-LOCKING 1/4-20..... UOC:XAA	1
12	AOOFF	2590011797602	27647	W6000HMV	WINCH,DRUN,VEHICLE 9000 LB WINCH... UOC:XAA	1
13	MOOZZ		34623	RCSK17839-1	.CABLE ASSEMBLY POSITIVE MAKE FROM WIRE P/N M13486/1-12,86 INCHES LONG. UOC:XAA	1
14	PAOZA	5970008276566	06090	CRN1RED	..INSULATION SLEEVING RED..... UOC:XAA	1
15	PAOZZ	5940011704956	19207	8689221	..TERMINAL,LUG..... UOC:XAA	2
16	MOOZZ		34623	RCSK17839-2	.CABLE ASSEMBLY NEGATIVE MAKE FROM WIRE P/N M13486/1-12,88 INCHES LONG. UOC:XAA	1
17	PAOZZ	5970002215301	14429	RESINTEEP69C	..INSULATION SLEEVING BLACK..... UOC:XAA	1
18	PAOZZ	5940005202447	19207	7064829	..TERMINAL,LUG..... UOC:XAA	2
19	PAOZZ	5305012102309	27647	8548	.SCREW,TAPPING #10-24 X 3/8..... UOC:XAA	2
20	PAOZZ	5340009265449	96906	MS21334-28	.CLAMP,LOOP..... UOC:XAA	2
21	PAOZZ	5310009824939	96906	MS27040-13	.NUT,PLAIN,SQUARE 7/16-14..... UOC:XAA	4

END OF FIGURE

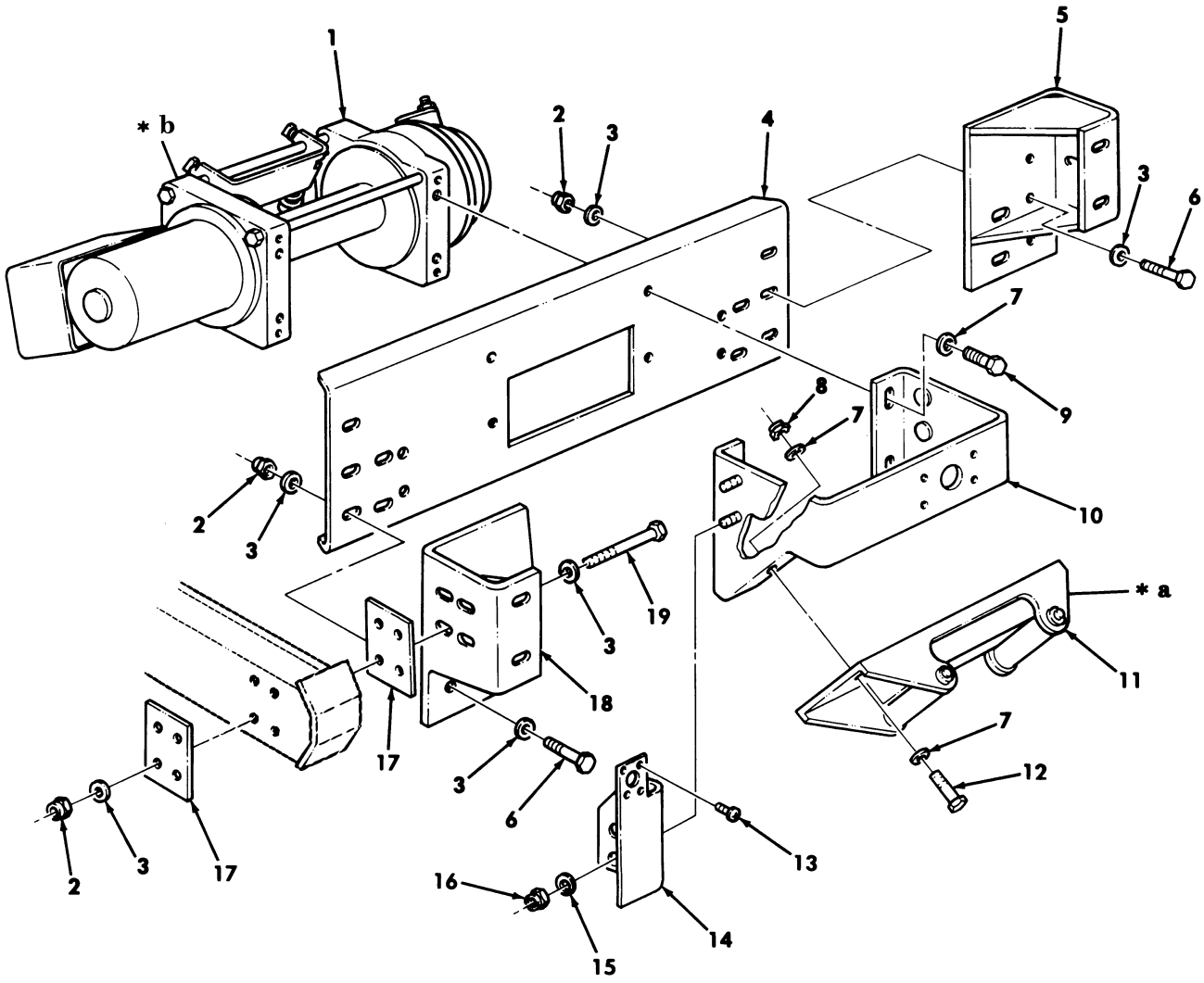

* a FOR BREAKDOWN, SEE FIGURE 253
* b FOR BREAKDOWN, SEE FIGURE 260

Figure 256. Rear Winch Assembly, Mounting Hardware, and Related Parts.

(1) ITEM NO	(2) SMR CODE	(3) NSN	(4) CAGEC	(5) PART NUMBER	(6) DESCRIPTION AND USABLE ON CODES(UOC)	(7) QTY
					GROUP 3307 HOIST,CAPSTAN,WINDLASS, CRANE, OR WINCH ASSEMBLY	
					FIG. 256 REAR WICH ASSEMBLY, MOUNTING HARDWARE,AND RELATED PARTS	
1	PAOFF	2590014491777	34623	RCSK17181	WINCH,DRUM VEHICU 9000 LB..... UOC:XBB	1
2	PAOZZ	5310004883889	96906	MS51943-39	NUT,SELF-LOCKING,HE 1/2-13..... UOC:XBB	28
3	PAOZZ	5310011211703	06032	2310-0143-001	WASHER,FLAT 1/2..... UOC:XBB	56
4	PAOZZ	2540014128610	19207	12447091	BUMPER,VEHICULAR..... UOC:XBB	1
* 5	PFOZZ	5340014877203	34623	RCSK17451-1	BRACKET,MOUNTING R.H..... UOC:XBB	1
6	PAOZZ	5305000712069	80204	B1821BH050C125N	SCREW,CAP,HEXAGON H 1/2-13 X 1.25.. UOC:XBB	20
7	PAOZZ	5310008094085	96906	MS27183-16	WASHER,FLAT 15/32..... UOC:XBB	8
8	PAOZZ	5310014664852	24617	9419477	NUT,SELF-LOCKING HE 7/16-14..... UOC:XBB	2
9	PAOZZ	5305000711789	80204	B1821BH044C138N	BOLT,MACHINE 7/16-14 X 1.375..... UOC:XBB	4
10	PAOZZ	5340014342851	34623	RCSK17450	BRACKET,MOUNTING WIRE ROPE..... UOC:XBB	1
11	PAOZZ	2590014486351	19207	12447104	BRACKET ASSEMBLY WIRE ROPE GUIDE... UOC:XBB	1
12	PAOZZ	5305000711788	80204	B1821BH044C125N	SCREW,CAP,HEXAGON H 7/16-14 X 1.25. UOC:XBB	2
13	PAOZZ	2305009844988	78570	A22673	SCREW,MACHINE..... UOC:XBB	4
* 14	PAOZZ	5340014856967	19207	RCSK17851	BRACKET,ANGLE REAR..... UOC:XBB	1
15	PAOZZ	5310012805796	96906	MS27183-57	WASHER,FLAT 13/32..... UOC:XBB	4
16	PAOZZ	5310009359021	96906	MS51943-35	NUT,SELF-LOCKING,HE 3/8-16..... UOC:XBB	4
17	PFOZZ	5340012055377	19207	12338164	SPACER,PLATE..... UOC:XBB	4
* 18	PFOZZ	5340014861539	34623	RCSK17451-2	BRACKET,MOUNTING L.H..... UOC:XBB	1
19	PAOZZ	5305000711783	80204	B1821BH050C425N	SCREW,CAP,HEXAGON H 1/2-13 X 4.25.. UOC:XBB	8

END OF FIGURE

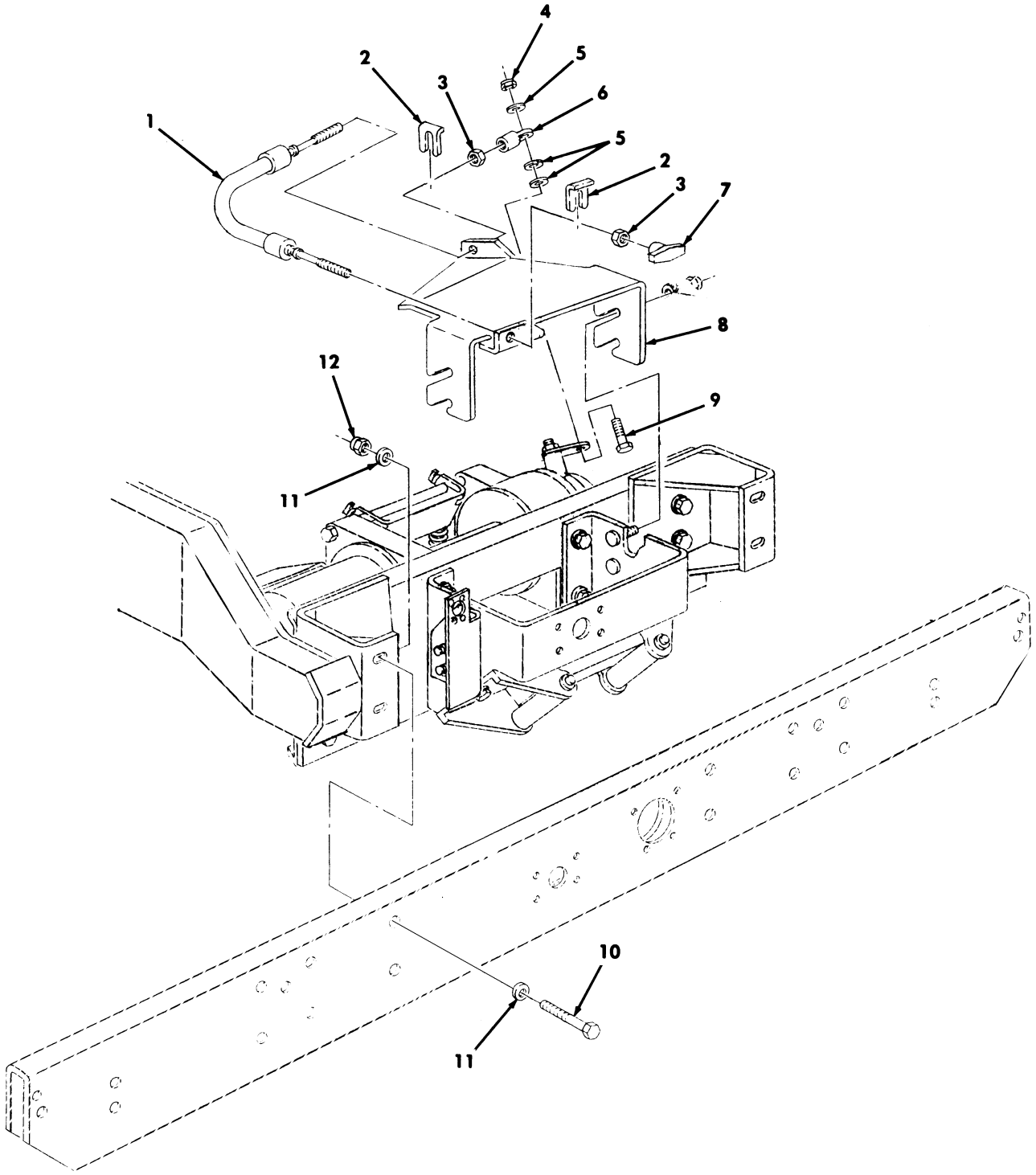

Figure 257. Rear Winch Clutch Control.

(1) ITEM NO	(2) SMR CODE	(3) NSN	(4) CAGEC	(5) PART NUMBER	(6) DESCRIPTION AND USABLE ON CODES(UOC)	(7) QTY
					GROUP 3307 SPECIAL PURPOSE KITS	
					FIG. 257 REAR WINCH CLUTCH CONTROL	
1	PAOZZ	2590014730265	34623	RCSK17488	CONTROL ASSEMBLY,PU..... UOC:XBB	1
2	PAOZZ	5340012097807	34623	5588032	CLIP,SPRING TENSION..... UOC:XBB	2
3	PAOZZ	5310007320559	96906	MS51968-8	NUT,PLAIN HEXAGON..... UOC:XBB	2
4	PAOZZ	5310012134174	27647	6779	NUT,SELF-LOCKING,HE 3/8-16..... UOC:XBB	1
5	PAOZZ	5310014742938	27647	11524	WASHER,FLAT..... UOC:XBB	3
* 6	PAOZZ	5307014732757	27646	25671	STUD,BALL..... UOC:XBB	1
7	PAOZZ	5355014722179	99862	CL-654-TK	TEE-HANDLE CABLE AND WINCH CLUTCH ACTUATOR..... UOC:XBB	1
8	PAOZZ	5340014732686	34623	RCSK17484	BRACKET,MOUNTING..... UOC:XBB	1
9	PAOZZ	5305007252317	80204	B1821BH038C150N	SCREW,CAP,HEXAGON H 3/8-16 X 1.50.. UOC:XBB	1
10	PAOZZ	5305000712077	80204	B1821BH050C325N	SCREW,CAP,HEXAGON H 1/2-13 X 3.25.. UOC:XBB	4
11	PAOZZ	5310011211703	24617	2436165	WASHER,FLAT 1/2..... UOC:XBB	8
12	PAOZZ	5310004883889	96906	MS51943-39	NUT,SELF-LOCKING,HE 1/2-13..... UOC:XBB	4

END OF FIGURE

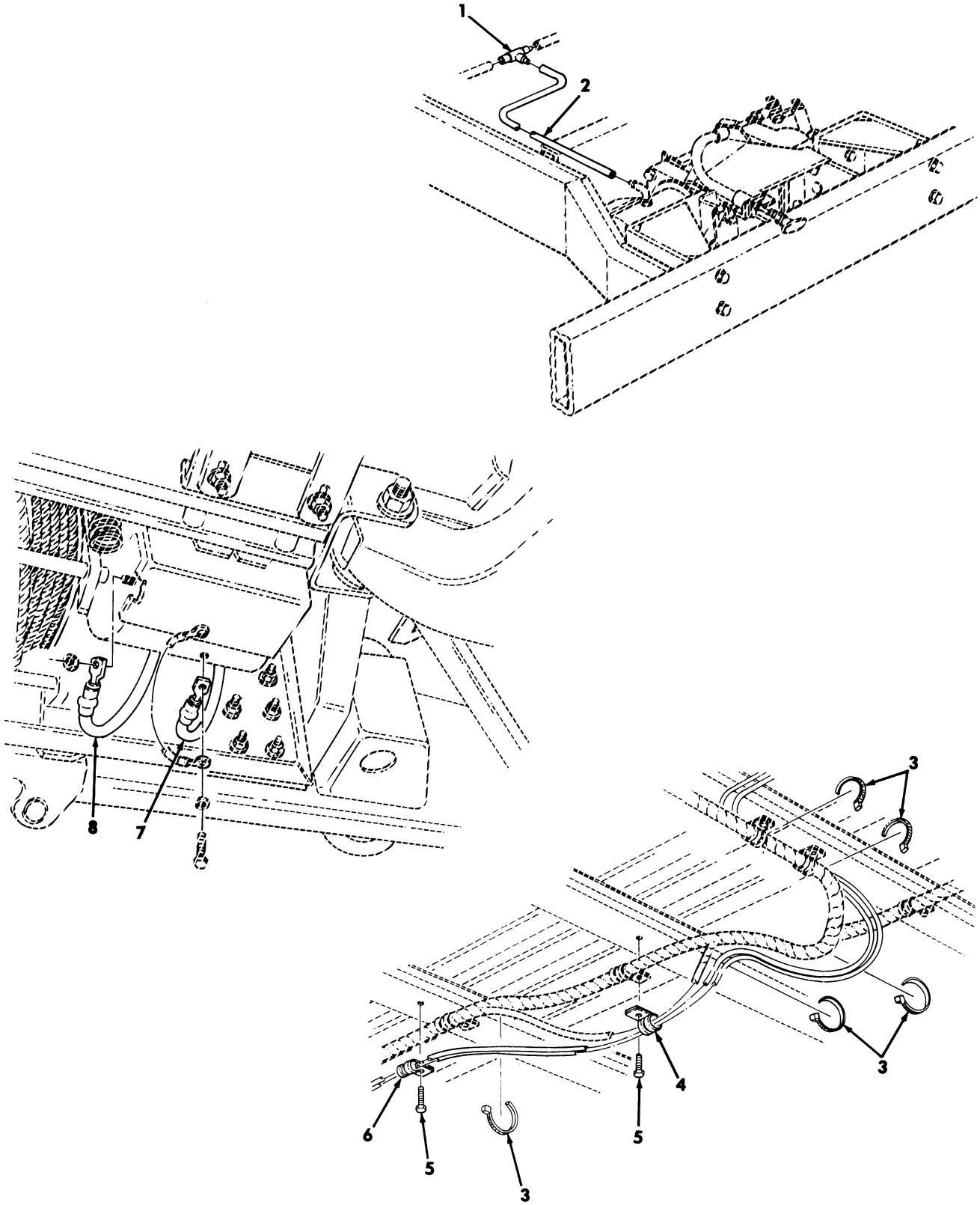

Figure 258. Rear Winch Vent System – M1114.

(1) ITEM NO	(2) SMR CODE	(3) NSN	(4) CAGEC	(5) PART NUMBER	(6) DESCRIPTION AND USABLE ON CODES(UOC)	(7) QTY
					GROUP 3307 HOIST,CAPSTAN,WINDLASS, CRANE OR WINCH ASSEMBLY	
					FIG. 258 REAR WINCH VENT SYSTEM M1114	
* 1	PAOZZ	4730010035105	79470	1064X4	TEE,HOSE..... UOX:XBB	1
2	MOOZZ		19207	CPR104420-1-40	TUBING,NONMETALLIC MAKE FROM TUBING,P/N CPR104420-1,40 INCHES LONG..... UOC:XBB	1
3	PAOZZ	5975012055379	96906	MS3367-7	STRAP,TIEDOWN,ELECT..... UOC:XBB	5
4	PAOZZ	5340009043705	96906	MS21333-82	CLAMP,LOOP..... UOC:XBB	1
5	PAOZA	5305010065736	02126	DR-T10X3/4	SCREW,TAPPING..... UOC:XBB	2
6	PAOZZ	5340009291794	96906	MS21334-31	CLAMP,LOOP..... UOC:XBB	1
7	PAOZZ	6150014749646	34623	EX4150-5	CABLE ASSEMBLY,SPEC..... UOC:XBB	1
8	PAOZZ	6150014604958	34623	EX4151-3	CABLE ASSEMBLY,SPEC..... UOC:XBB	1

END OF FIGURE

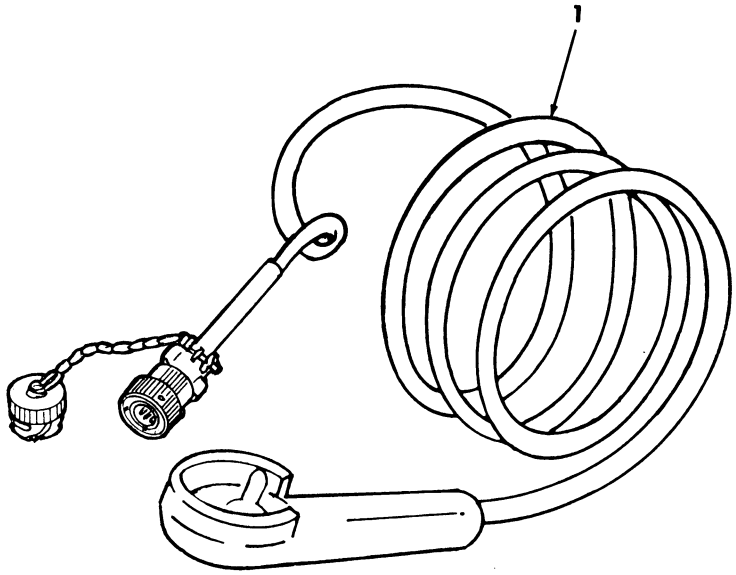

Figure 259. Winch Control.

(1) ITEM NO	(2) SMR CODE	(3) NSN	(4) CAGEC	(5) PART NUMBER	(6) DESCRIPTION AND USABLE ON CODES(UOC)	(7) QTY
					GROUP 3307 HOIST,CAPSTAN,WINDLASS, CRANE, OR WINCH ASSEMBLY	
					FIG. 259 WINCH CONTROL	
1	PAOZZ	2590014481105	34623	12447171	HANDLE,MANUAL WINCH CONTROL.....	1
					END OF FIGURE	

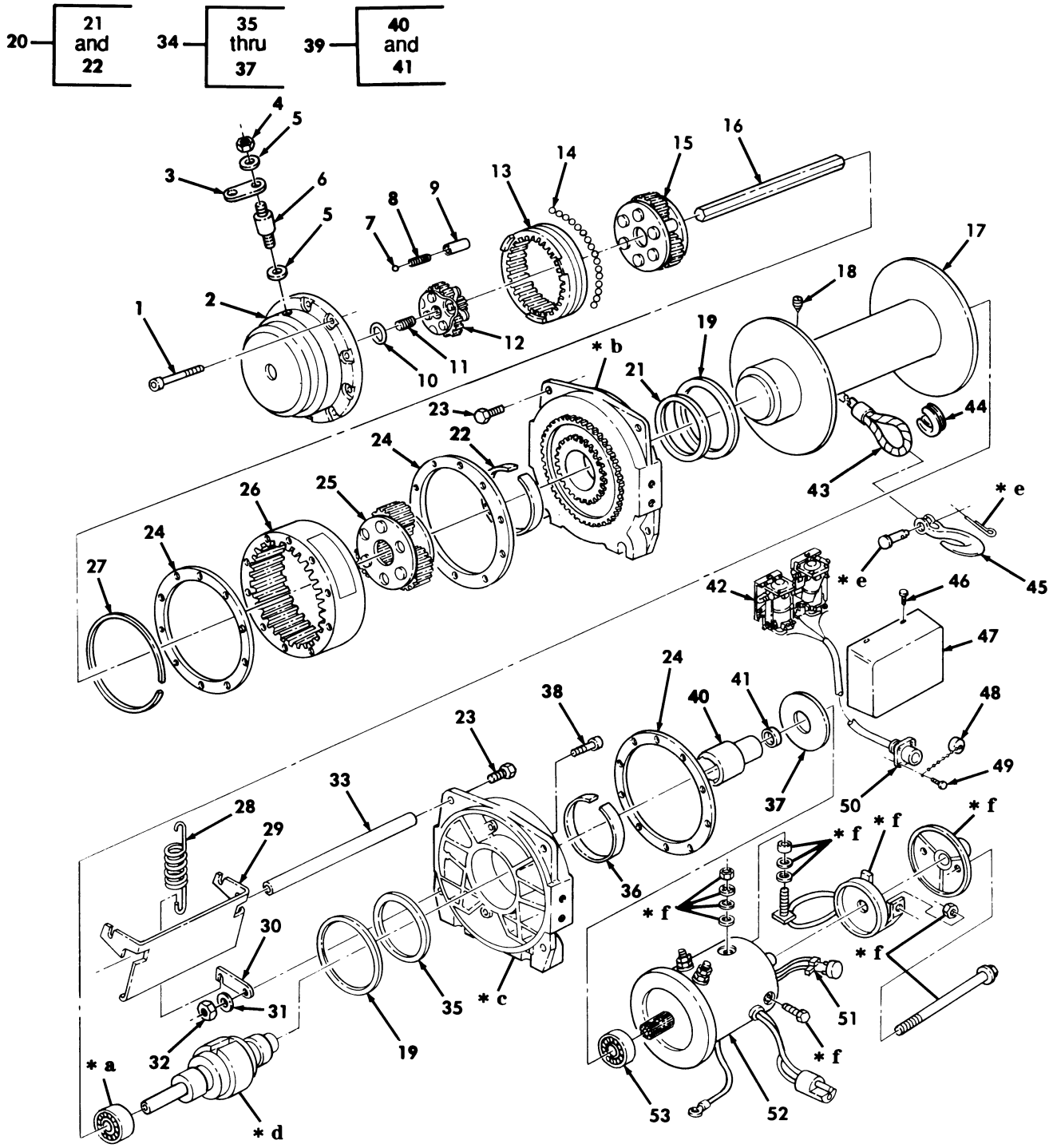

* a PART OF ITEM 17
* b PART OF ITEM 20
* c PART OF ITEM 34
* d PART OF ITEM 39
* e PART OF ITEM 45
* f PART OF ITEM 52

Figure 260. Winch Assembly, Front and Rear.

(1) ITEM NO	(2) SMR CODE	(3) NSN	(4) CAGEC	(5) PART NUMBER	(6) DESCRIPTION AND USABLE ON CODES(UOC)	(7) QTY
					GROUP 3307 HOIST,CAPSTAN,WINDLASS, CRANE, OR WINCH ASSEMBLY	
					FIG. 260 WINCH ASSEMBLY,FRONT AND REAR	
1	PAFZZ	5305013091521	27647	15603	SCREW,CAP,SOCKET HE 1/4-20 X 3.00..	10
2	PAFZZ	3040014441756	27647	34384	HOUSING,MECHANICAL.....	1
3	PAFZZ	3040014200465	27646	25364	LEVER,REMOTE CONTRO.....	1
4	PAFZZ	5310012134174	27647	6779	NUT,SELF-LOCKING,HE 3/8-16.....	1
5	PAFZZ	5310014742938	27646	11524	WASHER,FLAT.....	2
* 6	PAFZZ	3040014206930	27646	61124	SHAFT,SHOULDERED.....	1
7	PAFZZ	3110014444020	27647	1834	BALL,BEARING 1/4 DIA.....	1
8	PAFZZ	5360014200480	27646	1833	SPRING,HELICAL,COMP.....	1
9	PAFZZ	5365013069955	27647	15686	SPACER,SLEEVE.....	1
10	PAFZZ	3040013076157	27647	21009	THRUST PLATE,CLUTCH.....	1
11	PAFZZ	3020014441359	27647	24832	GEAR,SPUR.....	1
12	PAFZZ	3010014444018	27647	15643	CARRIER,GEAR ASSEMB.....	1
13	PAFZZ	3020014464387	27647	14916	GEAR,INTERNAL.....	1
14	PAFZZ	3110014444100	27647	22350	BALL,BEARING SET CONTAINS 85 BALLS.	1
15	PAFZZ	3010014444019	27647	24563	CARRIER,GEAR ASSEMB.....	1
16	PAFZZ	3040014463684	27647	32209	SHAFT,STRAIGHT.....	1
17	PAFZZ	2590014465962	27647	32231	REEL,CABLE.....	1
18	PAFZZ	5305014485074	27647	36974	SETSCREW M10.....	1
19	PAFZZ	3120014478663	27647	30277	BEARING,WASHER,THRU.....	2
20	PAFZZ	2590014465957	27647	32237	HOLDER,CABLE REEL.....	1
21	PAFZA	5330014464696	27647	30275	.PACKING ASSEMBLY.....	1
22	PAFZZ	3120014478658	27647	30274	.BUSHING,SLEEVE.....	1
23	PAFZZ	5305014485080	27647	30328	SCREW,MACHINE 3/8-16 X .75.....	6
24	PAFZZ	5330013067887	27647	14964	GASKET.....	3
25	PAFZZ	3010013064113	27647	15647	GEAR ASSEMBLY,SPEED.....	1
26	PAFZZ	3020014463695	27647	32239	GEAR,INTERNAL MIL 9000.....	1
* 27	PAFZZ	5365014266643	27647	34848	SPACER,RING.....	1
28	PAFZZ	5360014197933	27646	24293	SPRING,HELICAL,EXTE.....	1
29	PAFZZ	9905010600479	10237	32244	PLATE,IDENTIFICATIO.....	1
30	PAFZZ	5365014340186	27647	32208	SPACER,SLEEVE.....	3
* 31	PAFZZ	2590014465957	27647	32237	WASHER,FLAT.....	4
32	PAFZZ	5310009824908	7X677	456702	NUT,SELF-LOCKING,HE.....	2
33	PAFZZ	5340014199075	27646	31146	BRACKET,MOUNTING.....	3
34	PAFZZ	3950014351014	27647	32236	HOUSING PART,MECHAN.....	1
35	PAFZA	5330014464696	27647	30275	.PACKING ASSEMBLY.....	1
36	PAFZZ	3120014478658	27647	30274	.BUSHING,SLEEVE.....	1
37	PAFZZ	3120014352495	27647	32062	.BEARING,WASHER,THRU.....	1
38	PAFZZ	5305012104967	27646	980074 5553	SCREW,CAP,SOCKET HE.....	10
39	PAFZZ	3950014351632	34623	5714499	BRAKE AND CLUTCH AS.....	1
40	PAFZZ	3010014295333	27647	30260	.COUPLING,SHAFT,RIGI.....	1
41	PAFZZ	3120014352560	27647	15271	.BEARING,WASHER,THRU.....	1
42	PAFZZ	5945014315195	27647	31604	SOLENOID ASSEMBLY.....	1
43	PAFZZ	4010014264536	27647	27569	WIRE ROPE ASSEMBLY, 3/8" EIPS X 100' LONG.....	1
44	PAFZZ	4030012560471	75535	G-408-3/8	THIMBLE,ROPE.....	1
45	PAFZZ	4030014264537	27647	29519	HOOK,HOIST W/CLEVIS AND COTTER PINS	1
46	PAFZZ	5305012102309	27647	8548	SCREW,TAPPING #10-24 X 3/8.....	3

(1) ITEM NO	(2) SMR CODE	(3) NSN	(4) CAGEC	(5) PART NUMBER	(6) DESCRIPTION AND USABLE ON CODES(UOC)	(7) QTY
47	PAFZA	5340014300037	27647	31585	COVER,PROTECTIVE,DU.....	1
48	PAFZZ	5935014605508	71468	CA121003-3	COVER,ELECTRICAL CO.....	1
49	PAFZZ	5305009844988	96906	MS35206-228	SCREW,MACHINE .138-32 X .375.....	4
50	PAFZZ	5935014315656	27647	31597	CONNECTOR,RECEPTACL.....	1
51	PAFZZ	6110014345562	27647	24800	PROTECTOR,THERMAL-O.....	1
52	PAFZZ	6105014341729	27647	32235	MOTOR,DIRECT CURREN.....	1
53	PAFZZ	3110001089247	19207	900529	BEARING,BALL,ANNULA.....	1

END OF FIGURE

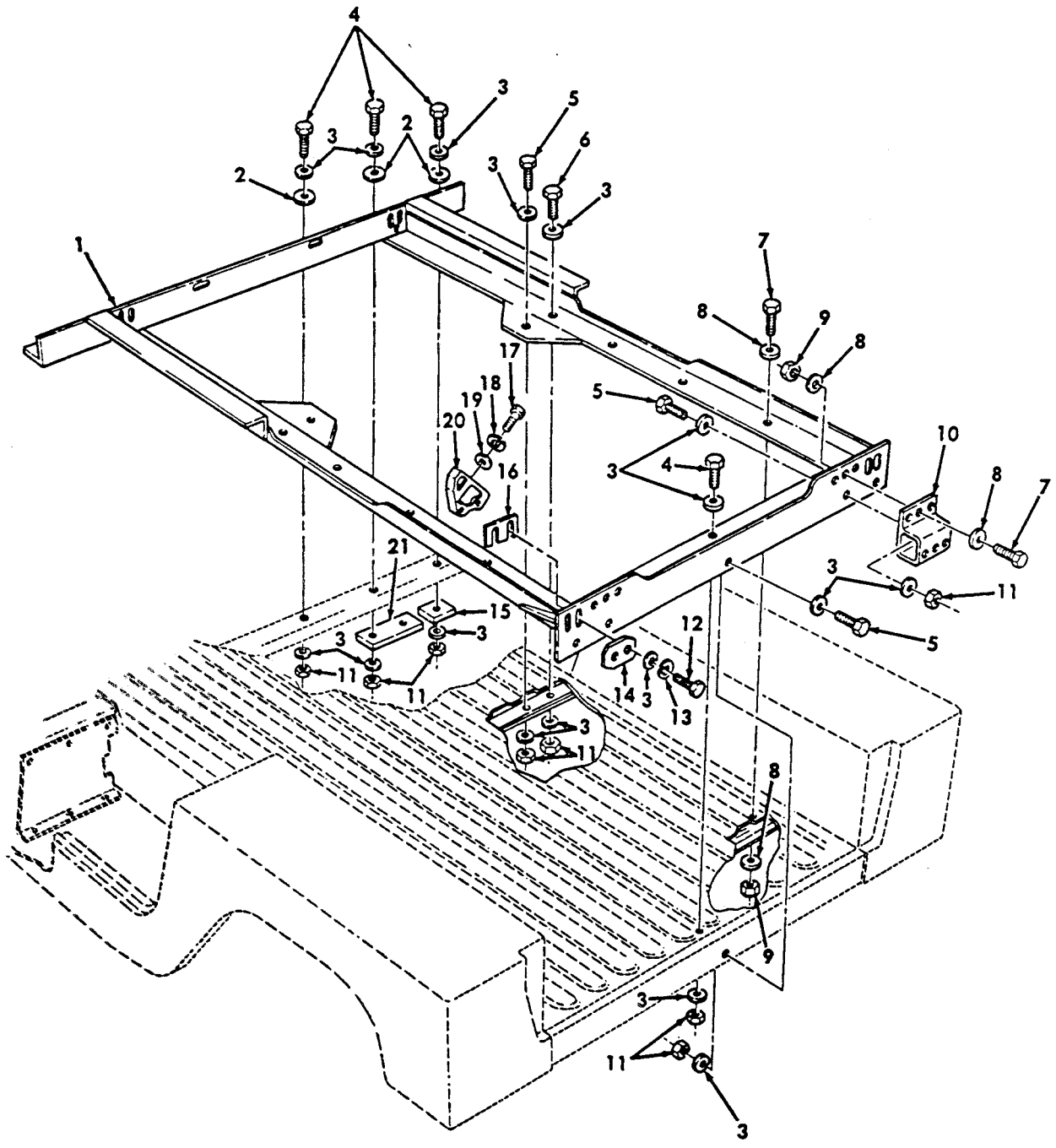

Figure 261. Kit, S250 Shelter Mounting Components.

(1) ITEM NO	(2) SMR CODE	(3) NSN	(4) CAGEC	(5) PART NUMBER	(6) DESCRIPTION AND USABLE ON CODES(UOC)	(7) QTY
					GROUP 3307 SPECIAL PURPOSE KITS	
					FIG. 261 KIT,S250 SHELTER MOUNTING COMPONENTS	
1	PAOZZ	2540012138057	19207	12339875	SUPPORT ASSEMBLY,MO PART OF KIT P/N 57K3542..... UOC:XAA	1
2	PAOZZ	5310012110698	19207	12339862-2	WASHER,FLAT PART OF KIT P/N 57K3542. UOC:XAA	8
3	PAOZZ	5310011211703	06032	2310-0143-001	WASHER,FLAT 1/2 PART OF KIT P/N 57K3542..... UOC:XAA	44
4	PAOZZ	5306013600926	3M915	17C836R	BOLT,MACHINE 1/2-13 X 1.50 PART OF KIT P/N 57K3542..... UOC:XAA	9
5	PAOZZ	5306008440036	7X677	427566	BOLT,MACHINE 1/2-13 X 1.50 PART OF KIT P/N 57K3542..... UOC:XAA	9
* 6	PAOZZ	5305000712070	80204	B1821BH050C175N	SCREW,CAP HEXAGON H 1/2-13 X 1.75 PART OF KIT P/N 57K3542..... UOC:XAA	5
* 7	PAOZZ	5305006882111	80204	B1821BH038C138N	SCREW,CAP,HEXAGON H 3/8-16 X 1.38 PART OF KIT P/N 57K3542..... UOC:XAA	10
* 8	PAOZZ	5310000806004	96906	MS27183-14	WASHER,FLAT PART OF KIT P/N 57K3542 UOC:XAA	20
* 9	PAOZZ	5310004582382	24617	9418969	NUT,SELF-LOCKING,HE 3/8-16 PART OF KIT P/N 57K3542..... UOC:XAA	16
* 10	PAOZZ	5340012144675	19207	12338972	BRACKET,MOUNTING PART OF KIT P/N 57K3542..... UOC:XAA	2
* 11	PAOZZ	5310000200358	72962	21NE083	NUT,SELF-LOCKING,HE 1/2-13 PART OF KIT P/N 57K3542..... UOC:XAA	17
* 12	PAOZZ	5306012761621	34623	5597349	BOLT,SELF-LOCKING 1/2-13 X 2.50 PART OF KIT P/N 57K3542..... UOC:XAA	8
* 13	PAOZZ	5310008347606	96906	MS35340-48	WASHER,LOCK 1/2 PART OF KIT P/N 57K3542..... UOC:XAA	8
* 14	PAOZZ	5365012772387	19207	12341968	SPACER,PLATE PART OF KIT P/N 57K3542 UOC:XAA	4
* 15	PFOZZ	2590012131629	34623	12339857	PLATE,REINFORCEMENT PART OF KIT P/N 57K3542..... UOC:XAA	2
* 16	PAOZZ	5365012658937	19207	12341967-1	SPACER,PLATE 0.09 IN. PART OF KIT P/N 57K3542..... UOC:XAA	2

(1) ITEM NO	(2) SMR CODE	(3) NSN	(4) CAGEC	(5) PART NUMBER	(6) DESCRIPTION AND USABLE ON CODES(UOC)	(7) QTY
* 16	PAOZZ	5365012658938	34623	12341967-2	SPACER,PLATE 0.12 IN. PART OF KIT P/N 57K3542..... UOC:XAA	2
* 16	PAOZZ	5365012658939	19207	12341967-3	SPACER,PLATE 0.03 IN. PART OF KIT P/N 57K3542..... UOC:XAA	2
* 17	PAOZZ	5306013601123	24617	9423557	BOLT,MACHINE 7/16-14 X 2.50 PART OF KIT P/N 57K3542.....	4
* 18	PAOZZ	5310006559370	96906	MS35339-47	WASHER,LOCK 29/64 PART OF KIT P/N 57K3542.....	4
* 19	PAOZZ	5310008094085	96906	MS27183-16	WASHER,FLAT 7/16 PART OF KIT P/N 57K3542.....	4
* 20	PAOZZ	5340012658905	19207	12341969	BRACKET,MOUNTING PART OF KIT P/N 57K3542.....	4
* 21	PFOZZ	2590012131628	19207	12339856	PLATE,REINFORCEMENT “B” BEAM PART OF KIT P/N 57K3542.....	2

END OF FIGURE

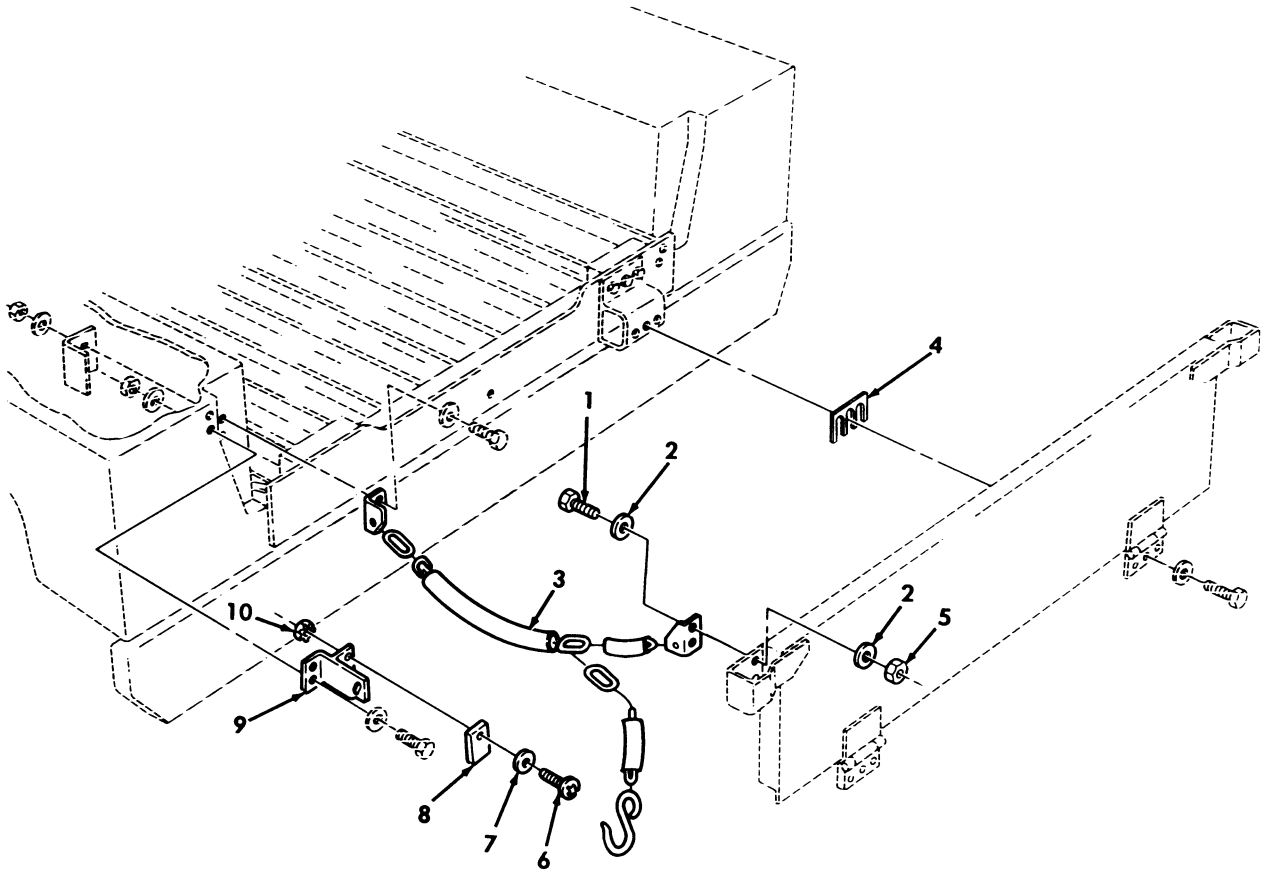

Figure 262. Kit, S250 Shelter Tailgate Mounting Components.

(1) ITEM NO	(2) SMR CODE	(3) NSN	(4) CAGEC	(5) PART NUMBER	(6) DESCRIPTION AND USABLE ON CODES(UOC)	(7) QTY
					GROUP 3307 SPECIAL PURPOSE KITS	
					FIG. 262 KIT,S250 SHELTER TAILGATE MOUNTING COMPONENTS	
* 1	PAOZZ	5305002264828	80204	B1821BH031C113N	BOLT,MACHINE 5/16-18 X 1-1/8 PART OF KIT P/N 57K3542..... UOC:XAA	4
2	PAOZZ	5310011191024	24617	2436162	WASHER,FLAT 5/16 PART OF KIT P/N 57K3542..... UOC:XAA	8
3	PAOZZ	4010012177086	34623	12339229-1	CHAIN ASSEMBLY,SING L.H. PART OF KIT P/N 57K3542..... UOC:XAA	1
3	PAOZZ	4010012157466	34623	12339229-2	CHAIN ASSEMBLY,SING R.H. PART OF KIT P/N 57K3542..... UOC:XAA	1
4	PAOZZ	5365012712491	19207	12340045	SPACER,PLATE PART OF KIT P/N 57K3542 UOC:XAA	2
5	PAOZZ	5310011193668	24617	9422295	NUT,SELF-LOCKING,CO PART OF KIT P/N 57K3542..... UOC:XAA	4
6	PAOZZ	5305009846212	96906	MS35206-265	SCREW,MACHINE #10-24 X 0.75 PART OF KIT P/N 57K3542..... UOC:XAA	4
7	PAOZZ	5310013611163	24617	9417373	WASHER,FLAT #10 PART OF KIT P/N 57K3542..... UOC:XAA	4
8	PAOZZ	5342012147809	19207	12338976	MOUNT,RESILIENT PART OF KIT P/N 57K3542..... UOC:XAA	2
9	PAOZZ	2540013141121	34623	5590669	LATCH,DOOR,VEHICULA L.H. PART OF KIT P/N 57K3542..... UOC:XAA	1
9	PAOZZ	2540012096875	19207	12338978-2	LATCH,DOOR,VEHICULA R.H. PART OF KIT P/N 57K3542..... UOC:XAA	1
10	PAOZZ	5310012110691	7X677	9422771	NUT,PLAIN,ASSEMBLED #10-24 PART OF KIT P/N 57K3542..... UOC:XAA	4
KIT	PDOZZ	5340014558700	19207	57K3542	MOUNTING KIT..... UOC:XAA	1
					BOLT,MACHINE (9) 261-4	
					BOLT,MACHINE (9) 261-5	
					BOLT,MACHINE (4) 261-17	
					BOLT,MACHINE (4) 262-1	
					BOLT,SELF-LOCKING (8) 261-12	
					BRACKET,MOUNTING (4) 261-20	
					BRACKET,MOUNTING (2) 261-10	
					CHAIN ASSEMBLY,SING(1) 262-3	
					CHAIN ASSEMBLY,SING(1) 262-3	
					LATCH,DOOR,VEHICULA(1) 262-9	
					LATCH,DOOR,VEHICULA(1) 262-9	

(1) ITEM NO	(2) SMR CODE	(3) NSN	(4) CAGEC	(5) PART NUMBER	(6) DESCRIPTION AND USABLE ON CODES(UOC)	(7) QTY
					MOUNT,RESILIENT (2) 262-8	
					NUT,PLAIN,ASSEMBLED(4) 262-10	
					NUT,SELF-LOCKING,HE(10) 261-9	
					NUT,SELF-LOCKING,HE(18) 261-11	
					NUT,SELF-LOCKING,HE(4) 262-5	
					PLATE,REINFORCEMENT(2) 261-21	
					PLATE,REINFORCEMENT(2) 261-15	
					SCREW,MACHINE (10) 261-7	
					SCREW,MACHINE (4) 262-6	
					SPACER,PLATE (4) 261-14	
					SPACER,PLATE (2) 261-16	
					SPACER,PLATE (2) 261-16	
					SPACER,PLATE (2) 261-16	
					SPACER,PLATE (2) 262-4	
					SUPPORT ASSEMBLY,MO(1) 261-1	
					WASHER,FLAT (8) 261-2	
					WASHER,FLAT (44) 261-3	
					WASHER,FLAT (20) 261-8	
					WASHER,FLAT (4) 261-19	
					WASHER,FLAT (8) 262-2	
					WASHER,FLAT (4) 262-7	
					WASHER,LOCK (8) 261-13	
					WASHER,LOCK (4) 261-18	
					WASHER,LOCK (6) 261-6	

END OF FIGURE

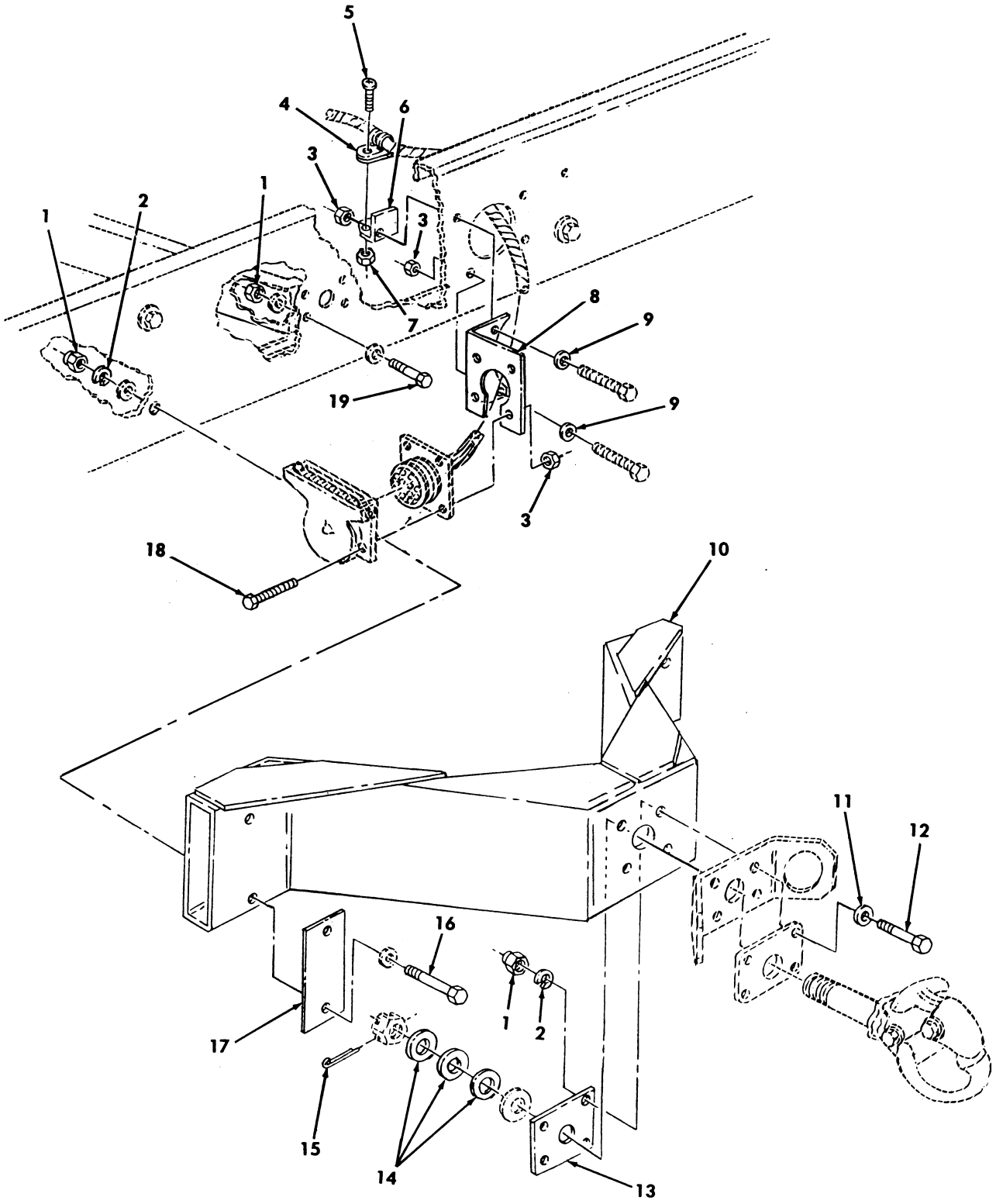

Figure 263. Pintle Extension Kit, Electrical Connector Bracket, and Miscellaneous Hardware.

(1) ITEM NO	(2) SMR CODE	(3) NSN	(4) CAGEC	(5) PART NUMBER	(6) DESCRIPTION AND USABLE ON CODES(UOC)	(7) QTY
					GROUP 3307 SPECIAL PURPOSE KITS	
					FIG. 263 PINTLE EXTENSION KIT, ELECTRICAL CONNECTOR BRACKET,AND MISCELLANEOUS HARDWARE	
1	PAOZZ	5310004883889	96906	MS51943-39	NUT,SELF-LOCKING,HE 1/2-13 PART OF KIT P/N 57K1640.....	12
* 2	PAOZZ	5310002090965	96906	MS35338-47	WASHER,LOCK 1/2 PART OF KIT P/N 57K1640.....	8
3	PAOZZ	5310011520598	24617	271172	NUT,SELF-LOCKING,AS 1/4-20 PART OF KIT P/N 57K1640.....	6
4	PAOZZ	5340000572906	96906	MS21333-73	CLAMP,LOOP PART OF KIT P/N 57K1640..	1
5	PAOZZ	5305009846193	96906	MS35206-245	SCREW,MACHINE #8-32 X 1/2 PART OF KIT P/N 57K1640.....	1
6	PAOZZ	5340014067418	19207	12342664	BRACKET,ANGLE PART OF KIT P/N 57K1640.....	1
7	PAOZZ	5310010695243	72582	271163	NUT,PLAIN,ASSEMBLED #8-32 PART OF KIT P/N 57K1640.....	1
8	PAOZZ	5340014066965	19207	12342663	BRACKET,ANGLE PART OF KIT P/N 57K1640.....	1
9	PAOZZ	5310011023270	24617	2436161	WASHER,FLAT 1/4 PART OF KIT P/N 57K1640.....	2
10	PAOZZ	2540014117519	19207	12342661	PINTLE EXTENSION PART OF KIT P/N 57K1640.....	1
11	PAOZZ	5310011211703	06032	2310-0143-001	WASHER,FLAT 1/2 PART OF KIT P/N 57K1640.....	4
12	PAOZZ	5306013601128	24617	455006	BOLT,MACHINE 1/2-13 X 3.75 PART OF KIT P/N 57K1640.....	4
13	PAOZZ	5340014066964	19207	12342662	PLATE,MOUNTING PART OF KIT P/N 57K1640.....	1
14	PAOZZ	5310005158776	96906	MS20002-20	WASHER,FLAT 1-1/4 X 2.125 PART OF KIT P/N 57K1640.....	3
15	PAOZZ	5315008460126	80205	MS24665-628	PIN,COTTER 1/4 X 3.00 PART OF KIT P/N 57K1640.....	1
16	PAOZZ	5305014114455	24617	9430516	SCREW,CAP,HEXAGON H 1/2-13 X 5-3/4 PART OF KIT P/N 57K1640.....	4
17	PAOZZ	5340014077192	19207	12342665	PLATE,MOUNTING PART OF KIT P/N 57K1640.....	2
18	PAOZZ	5305010164344	96906	MS51849-95	SCREW,MACHINE 1/4-20 X 5/8 PART OF KIT P/N 57K1640.....	4
19	PAOZZ	5306013601125	24617	455000	BOLT,MACHINE 1/2-13 X 1.25 PART OF KIT P/N 57K1640.....	4
KIT	PAOZZ	5340014107036	19207	57K1640	HARDWARE KIT,MECHAN.....	1
					BOLT,MACHINE (4) 263-12	
					BOLT,MACHINE (4) 263-19	
					BRACKET,ANGLE (1) 263-8	
					BRACKET,ANGLE (1) 263-6	
					CLAMP,LOOP (1) 263-4	
					NUT,PLAIN,ASSEMBLED(1) 263-7	
					NUT,SELF-LOCKING,AS(6) 263-3	
					NUT,SELF-LOCKING,HE(12) 263-1	
					PIN,COTTER (1) 263-15	

(1) ITEM NO	(2) SMR CODE	(3) NSN	(4) CAGEC	(5) PART NUMBER	(6) DESCRIPTION AND USABLE ON CODES(UOC)	(7) QTY
					PINTLE EXTENSION (1) 263-10	
					PLATE,MOUNTING (1) 263-13	
					PLATE,MOUNTING (2) 263-17	
					SCREW,CAP,HEXAGON H(4) 263-16	
					SCREW,MACHINE (4) 263-18	
					SCREW,MACHINE (1) 263-5	
					WASHER,FLAT (3) 263-14	
					WASHER,FLAT (2) 263-9	
					WASHER,FLAT (4) 263-11	
					WASHER,LOCK (8) 263-2	

END OF FIGURE

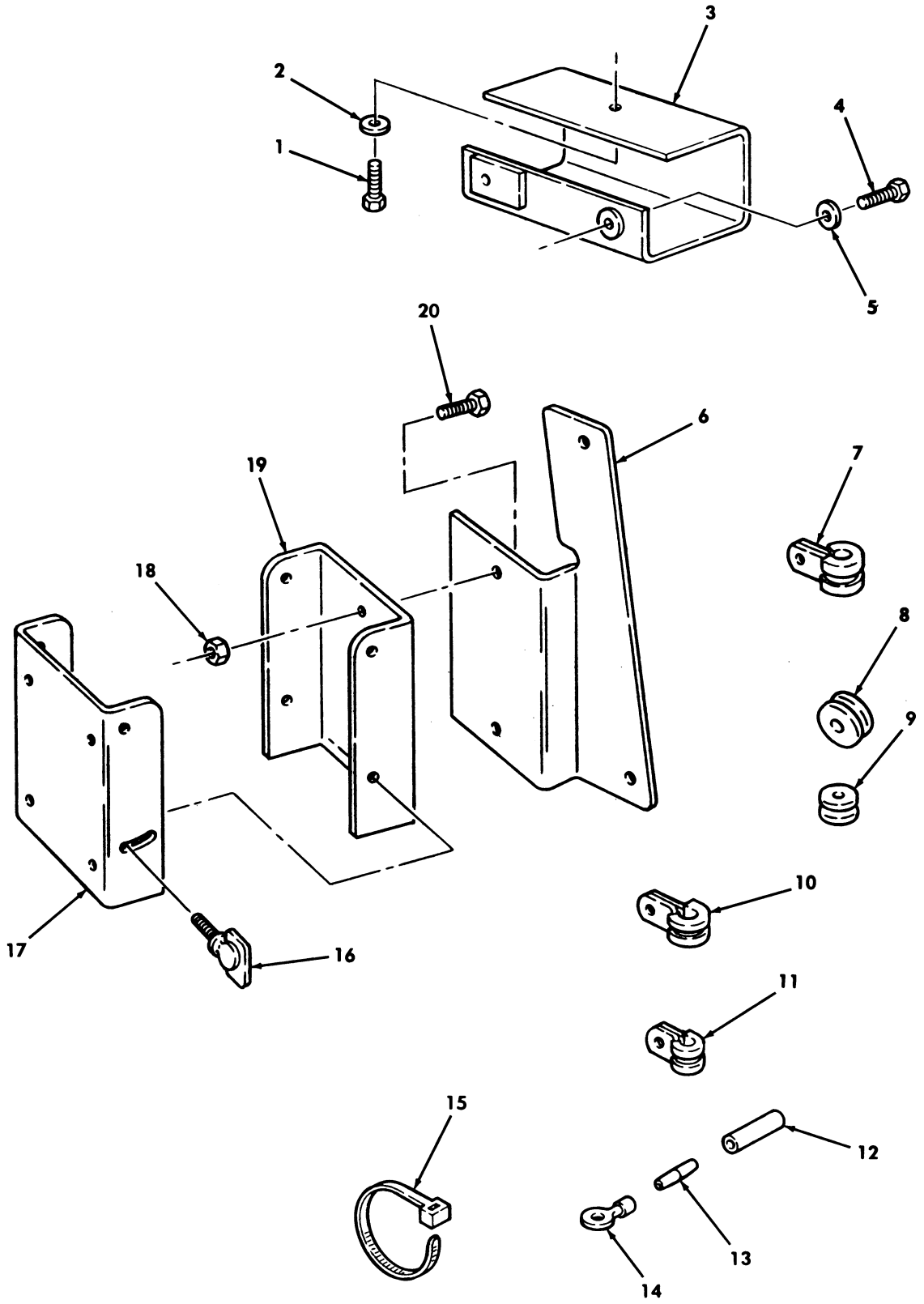

Figure 264. Precision Lightweight Global Positioning System Receiver (PLGR).

(1) ITEM NO	(2) SMR CODE	(3) NSN	(4) CAGEC	(5) PART NUMBER	(6) DESCRIPTION AND USABLE ON CODES(UOC)	(7) QTY
					GROUP 3307 SPECIAL PURPOSE KITS	
					FIG. 264 PRECISION LIGHTWEIGHT GLOBAL POSITIONING SYSTEM RECEIVER (PLGR)	
1	PAOZZ	5305012080274	7X677	160046	SCREW,MACHINE #10-32 X 1/2 PART OF KIT P/N 57K3242..... UOC:XBB	1
2	PAOZZ	5310009222017	72582	120217	WASHER,LOCK #10 PART OF KIT P/N 57K3242..... UOC:XBB	1
3	PAOZZ	5340014566554	19207	12460300	BRACKET,MULTIPLE AN PART OF KIT P/N 57K3242..... UOC:XBB	1
4	PAOZZ	5305000712509	80204	B1821BH025C150N	SCREW,CAP,HEXAGON H 1/4-20 X 1.50 PART OF KIT P/N 57K3242..... UOC:XBB	2
* 5	PAOZZ	5310006379541	80205	MS35338-46	WASHER,LOCK 3/8 PART OF KIT P/N 57K3242..... UOC:XBB	5
* 6	PAOZZ	5340014917144	19207	12460307	BRACKET,MOUNTING PART OF KIT P/N 57K3242..... UOC:XBB	1
7	PAOZZ	5340000881255	96906	MS21333-96	CLAMP,LOOP PART OF KIT P/N 57K3242.. UOC:XBB	1
* 8	PAOZZ	5325014920008	19207	12460299	GROMMET,NONMETALLIC PART OF KIT P/N 57K3242..... UOC:XBB	1
9	PAOZZ	5325001749336	96906	MS35489-31	GROMMET,NONMETALLIC PART OF KIT P/N 57K3242..... UOC:XBB	1
10	PAOZZ	5340000573025	96906	MS21333-108	CLAMP,LOOP PART OF KIT P/N 57K3242.. UOC:XBB	1
11	PAOZZ	5340000673868	96906	MS21333-109	CLAMP,LOOP PART OF KIT P/N 57K3242.. UOC:XBB	1
12	PAOZZ	5970010489378	81349	M23053/4-103-0	INSULATION SLEEVING PART OF KIT P/N 57K3242..... UOC:XBB	1
13	PAOZZ	5940001139420	80205	NAS1387-4	SPLICE,CONDUCTOR PART OF KIT P/N 57K3242..... UOC:XBB	1
14	PAOZZ	5940010354212	19207	7728780	TERMINAL,LUG U/I CONTAINS 10 EACH PART OF KIT P/N 57K3242..... UOC:XBB	2
* 15	PAOZZ	5975009846582	81343	MS3367-1-0	STRAP,TIEDOWN,ELECT PART OF KIT P/N 57K3242..... UOC:XBB	3
16	PAOZZ	5305014717623	19207	12460223	THUMBSCREW PART OF KIT P/N 57K3242.. UOC:XBB	2
17	PAOZZ	5340014662611	19207	12460218	BRACKET,DOUBLE ANGL FRONT PART OF KIT P/N 57K3242..... UOC:XBB	1

(1) ITEM NO	(2) SMR CODE	(3) NSN	(4) CAGEC	(5) PART NUMBER	(6) DESCRIPTION AND USABLE ON CODES(UOC)	(7) QTY
18	PAOZZ	5310001249265	72582	271169	NUT,PLAIN,ASSEMBLED #10-32 X 5/8 PART OF KIT P/N 57K3242..... UOC:XBB	8
19	PAOZZ	5340014662606	19207	12460219	BRACKET,DOUBLE ANGL REAR PART OF KIT P/N 57K3242..... UOC:XBB	1
20	PAOZZ	5305014077713	24617	160052	SCREW,MACHINE #10-32 X 5/8 PART OF KIT P/N 57K3242..... UOC:XBB	8
KIT	PAOZZ	2590014293007	19207	57K3242	PARTS KIT,BRACKET,V..... UOC:XBB	1
					BRACKET,DOUBLE ANGL(1) 264-17	
					BRACKET,DOUBLE ANGL(1) 264-19	
					BRACKET,MOUNTING (1) 264-6	
					BRACKET,MULTIPLE AN(1) 264-3	
					CLAMP,LOOP (1) 264-7	
					CLAMP,LOOP (1) 264-10	
					CLAMP,LOOP (1) 264-11	
					GROMMET,NONMETALLIC(1) 264-8	
					GROMMET,NONMETALLIC(1) 264-9	
					INSULATION SLEEVING(1) 264-12	
					NUT,PLAIN,ASSEMBLED(8) 264-18	
					SCREW,CAP,HEXAGON H(2) 264-4	
					SCREW,MACHINE (1) 264-1	
					SCREW,MACHINE (8) 264-20	
					SPLICE,CONDUCTOR (1) 264-13	
					STRAP,TIEDOWN,ELECT(3) 264-15	
					TERMINAL,LUG (2) 264-14	
					THUMBSCREW (2) 264-16	
					WASHER,LOCK (1) 264-2	
					WASHER,LOCK (5) 264-5	

END OF FIGURE

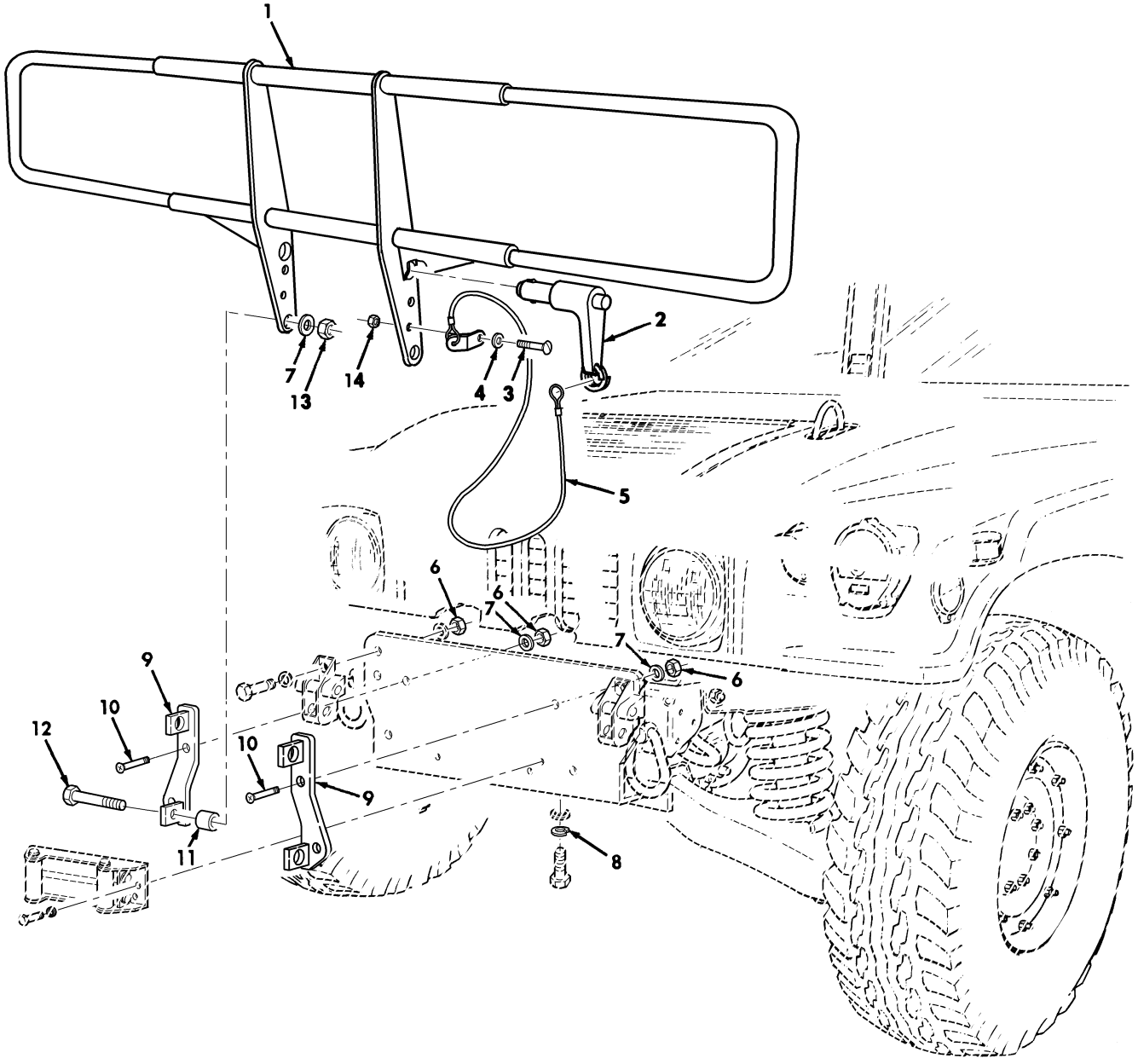

Figure 265. Kit, Brushguard.

(1) ITEM NO	(2) SMR CODE	(3) NSN	(4) CAGEC	(5) PART NUMBER	(6) DESCRIPTION AND USABLE ON CODES(UOC)	(7) QTY
					GROUP 3307 SPECIAL PURPOSE KITS	
					FIG. 265 KIT,BRUSHGUARD	
* 1	PAOZZ	2540014666114	34623	12460550	GUARD,BRUSH,VEHICU PART OF KIT P/N 57K4387.....	1
* 2	PAOZZ	5315014731590	80205	MS17986C1009	PIN,QUICK RELEASE PART OF KIT P/N 57K4387.....	2
* 3	PAOZZ	5305011858647	7X677	160057	SCREW,MACHINE PART OF KIT P/N 57K4387.....	2
* 4	PAOZZ	5310013611163	24617	9417373	WASHER,FLAT PART OF KIT P/N 57K4387	2
* 5	PAOZZ	4010014660849	19207	12342287	WIRE ROPE ASSEMBLY PART OF KIT P/N 57K4387.....	2
* 6	PAOZZ	5310004883889	96906	MS51943-39	NUT,SELF-LOCKING,HE PART OF KIT P/N 57K4387.....	4
* 7	PAOZZ	5310014124013	24617	2436163	WASHER,FLAT PART OF KIT P/N 57K4387	6
* 8	PAOZZ	5310006379541	80205	MS35338-46	WASHER,LOCK PART OF KIT P/N 57K4387	4
* 9	PAOZZ	5340014946794	19207	12480523-1	BRACKET,MOUNTING L.H. PART OF KIT 57K4387.....	1
* 9	PAOZZ	5340014957546	19207	12480523-2	BRACKET,MOUNTING R.H. PART OF KIT P/N 57K4387.....	1
* 10	PAOZZ	5305013937801	96906	MS24667-52Z	SCREW,CAP,SOCKET HE PART OF KIT P/N 57K4387.....	4
* 11	PAOZZ	5365014955340	19207	12338186-89	SPACER,SLEEVE PART OF KIT P/N 57K4387.....	2
* 12	PAOZZ	5305008213869	80204	B1821BH038C175N	SCREW,CAP,HEXAGON H 3/8-16 X 1.75 PART OF KIT P/N 57K4387.....	2
* 13	PAOZZ	5310014904433	81349	M45913/4-6CG8C	NUT,SELF-LOCKING,HE PART OF KIT P/N 57K4387.....	2
* 14	PAOZZ	5310001249265	72582	271169	NUT,PLAIN,ASSEMBLED PART OF KIT P/N 57K4387.....	2
*KIT	PDOZZ	2510014916919	19207	57K4387	KIT,BRUSHGUARD.....	1
					BRACKET,MOUNTING (1) 265-9	
					BRACKET,MOUNTING (1) 265-9	
					BRUSHGUARD ASSEMBLY(1) 265-1	
					NUT,PLAIN,ASSEMBLED(2) 265-14	
					NUT,SELF-LOCKING,HE(4) 265-6	
					NUT,SELF-LOCKING,HE(2) 265-13	
					PIN,QUICK RELEASE (2) 265-2	
					SCREW,CAP,HEXAGON H(2) 265-12	
					SCREW,MACHINE (2) 265-3	
					SCREW,CAP,SOCKET HE(4) 265-10	
					SPACER,SLEEVE (2) 265-11	
					WASHER,FLAT (2) 265-4	
					WASHER,FLAT (6) 265-7	
					WASHER,LOCK (4) 265-8	
					WIRE ROPE ASSEMBLY (2) 265-5	

END OF FIGURE

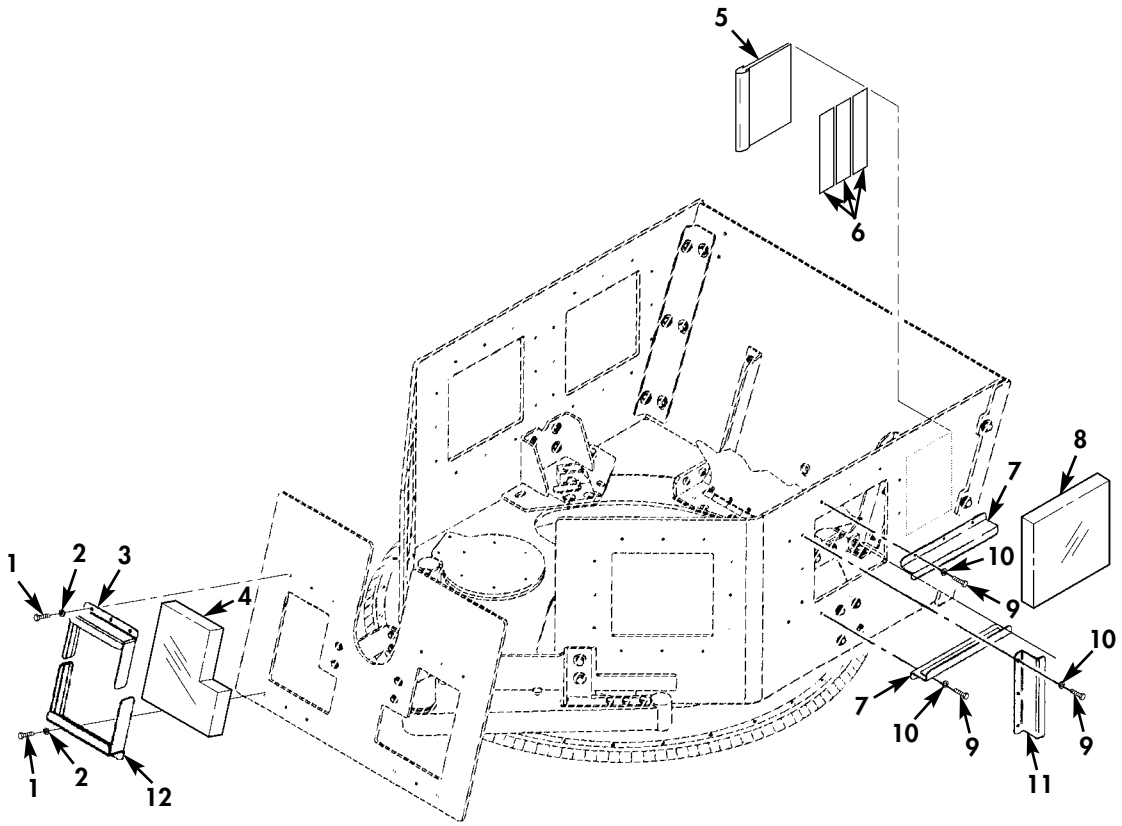

Figure 265A. O-GPK Windows, Mounting Brackets, and Related Hardware.

(1) ITEM NO	(2) SMR CODE	(3) NSN	(4) CAGEC	(5) PART NUMBER	(6) DESCRIPTION AND USABLE ON CODES(UOC)	(7) QTY
					GROUP 3307 SPECIAL PURPOSE KITS	
					FIG. 265A O-GPK WINDOWS,MOUNTING BRACKETS,AND RELATED HARDWARE	
* 1	PAOZZ	5305007215492	80204	B1821BH038C063N	SCREW,CAP,HEXAGON H 3/8-16 X 5/8 PART OF KIT P/N 13018185, PART OF KIT P/N 13018180..... UOC:TTA,XBB	12
* 2	PAOZZ	5310015135413	80205	NASM35338-46	WASHER,LOCK 3/8 PART OF KIT P/N 13018185, PART OF KIT P/N 13018180.. UOC:TTA,XBB	12
* 3	PAOZZ		19200	13014411	BRACKET,VEHICULAR C FRONT,UPPER PART OF KIT P/N 13018185, PART OF KIT P/N 13018180..... UOC:TTA,XBB	2
* 4	PAOZZ	6650015507525	19200	13014390	PERISCOPE,ARMORED V FRONT,L.H. PART OF KIT P/N 13018185, PART OF KIT P/N 13018180..... UOC:TTA,XBB	1
* 4	PAOZZ	6650015507555	19200	13014393	PERISCOPE,ARMORED V FRONT,R.H. PART OF KIT P/N 13018185, PART OF KIT P/N 13018180..... UOC:TTA,XBB	1
* 5	PFOZZ		6W728	6435128-01M1	POUCH,STORAGE PART OF KIT P/N 13018185, PART OF KIT P/N 13018180.. UOC:TTA,XBB	1
* 6	PAOZZ		6W728	6431468-05M1	HOOK,VELCRO PART OF KIT P/N 13018185 PART OF KIT P/N 13018180..... UOC:TTA,XBB	3
* 7	PAOZZ		19200	13014399	BRACKET,DOUBLE ANGL PART OF KIT P/N 13018185, PART OF KIT P/N 13018180.. UOC:TTA,XBB	10
* 8	PAOZZ	6650015507534	19200	13014384	PERISCOPE,ARMORED V PART OF KIT P/N 13018185, PART OF KIT P/N 13018180.. UOC:TTA,XBB	5
* 9	PAOZZ	5306002264824	80204	B1821BH031C063N	BOLT,MACHINE 5/16-18 X 5/8 PART OF KIT P/N 13018185, PART OF KIT P/N 13018180..... UOC:TTA,XBB	60
* 10	PAOZZ	5310015232980	80205	NASM35338-45	WASHER,LOCK 5/16 PART OF KIT P/N 13018185, PART OF KIT P/N 13018180.. UOC:TTA,XBB	60
* 11	PAOZZ		19200	13014398	BRACKET,VEHICULAR C SIDE PART OF KIT P/N 13018185, PART OF KIT P/N 13018180..... UOC:TTA,XBB	10
* 12	PAOZZ		19200	13014412	BRACKET,VEHICULAR C FRONT,LOWER PART OF KIT P/N 13018185, PART OF KIT P/N 1318180..... UOC:TTA,XBB	2

END OF FIGURE

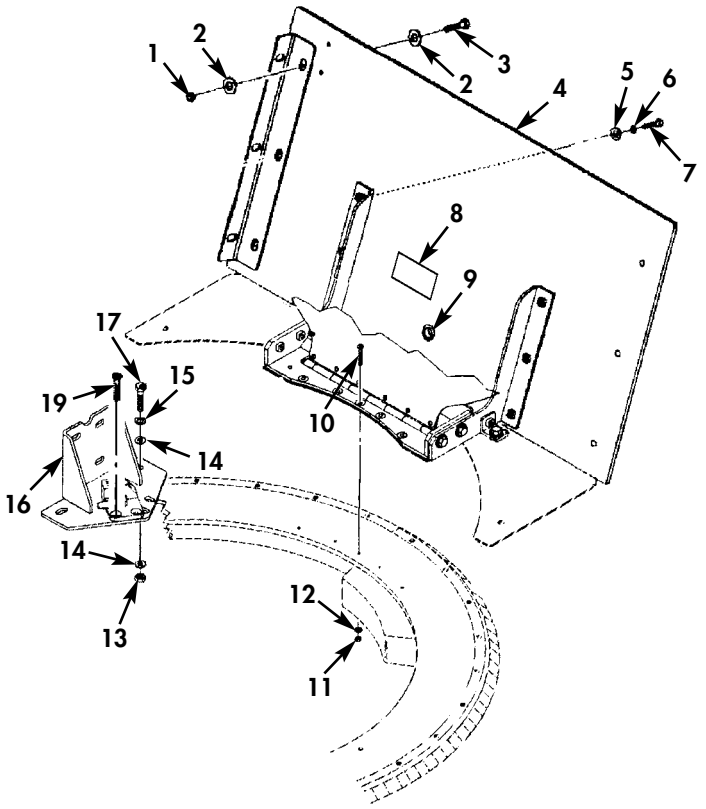

M1114

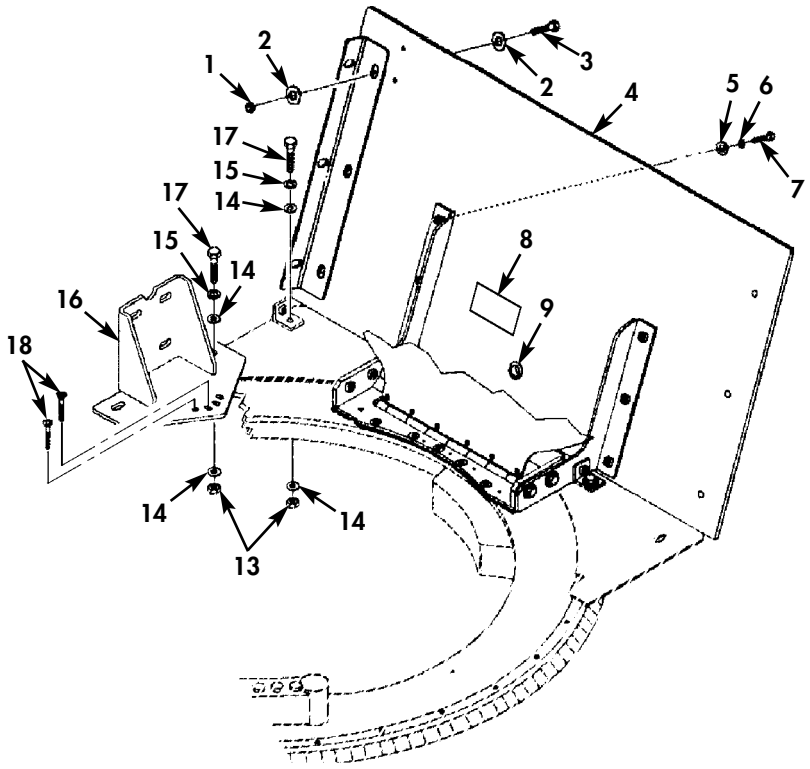

M1151

Figure 265B. O-GPK Rear Armor and Mounting Hardware.

(1) ITEM NO	(2) SMR CODE	(3) NSN	(4) CAGEC	(5) PART NUMBER	(6) DESCRIPTION AND USABLE ON CODES(UOC)	(7) QTY
					GROUP 3307 SPECIAL PURPOSE KITS	
					FIG. 265B O-GPK REAR ARMOR AND MOUNTING HARDWARE	
* 1	PAOZZ	5310004883889	96906	MS51943-39	NUT,SELF-LOCKING,HE 1/2-13 PART OF KIT P/N 13018185, PART OF KIT P/N 13018180..... UOC:TTA,XBB	6
* 2	PAOZZ	5310011211703	24617	2436165	WASHER,FLAT 1/2 PART OF KIT P/N 13018185, PART OF KIT P/N 13018180.. UOC:TTA,XBB	12
* 3	PAOZZ	5305000712069	80204	B1821BH050C150N	SCREW,CAP,HEXAGON H 1/2-13 X 1.50 PART OF KIT P/N 13018185, PART OF KIT P/N 13018180..... UOC:TTA,XBB	6
* 4	PAOZZ	9515015507386	19200	13014374	ARMOR PLATE PART OF KIT P/N 13018185 PART OF KIT P/N 13018180..... UOC:TTA,XBB	1
* 5	PAOZZ	5310014363742	6W728	4397005-015	WASHER,FLAT 3/8 PART OF KIT P/N 13018185, PART OF KIT P/N 13018180.. UOC:TTA,XBB	6
* 6	PAOZZ	5310014177273	6W728	4397004-008	WASHER,LOCK 3/8 PART OF KIT P/N 13018185, PART OF KIT P/N 13018180.. UOC:TTA,XBB	6
* 7	PAOZZ	5305014366377	6W728	4397000-064	SCREW,CAP,HEXAGON H 3/8-16 X 1.50 PART OF KIT P/N 13018185, PART OF P/N 13018180..... UOC:TTA,XBB	6
* 8	PAOZZ		19200	13014414	PLATE,IDENTIFICATIO PART OF KIT P/N 13018185, PART OF KIT P/N 13018180.. UOC:TTA,XBB	1
* 9	PFOZZ		19200	13014403	GROMMET,NONMETALLIC PART OF KIT P/N 13018185, PART OF KIT P/N 13018180.. UOC:TTA,XBB	1
* 10	PFOZZ	5305015354716	07BY4	92210A638	SCREW,MACHINE 3/8-16 X 4.00 PART OF KIT P/N 13018180..... UOC:XBB	5
* 11	PAOZZ	5310014398177	6W728	4397064-005	NUT,SELF-LOCKING,HE 3/8-16 PART OF KIT P/N 13018180..... UOC:XBB	5
* 12	PAOZZ	5310014192413	6W728	4397005-014	WASHER,FLAT 3/8 PART OF KIT P/N 13018180..... UOC:XBB	5
* 13	PAOZZ	5310009359021	96906	MS51943-35	NUT,SELF-LOCKING,HE 3/8-16 PART OF KIT P/N 13018180..... UOC:XBB	2
* 13	PAOZZ	5310009359021	96906	MS51943-35	NUT,SELF-LOCKING,HE 3/8-16 PART OF KIT P/N 13018185..... UOC:TTA	4
* 14	PAOZZ	5310000806004	96906	MS27183-14	WASHER,FLAT 3/8 PART OF KIT P/N 13018185..... UOC:TTA	8

(1) ITEM NO	(2) SMR CODE	(3) NSN	(4) CAGEC	(5) PART NUMBER	(6) DESCRIPTION AND USABLE ON CODES(UOC)	(7) QTY
* 14	PAOZZ	5310000806004	96906	MS27183-14	WASHER,FLAT 3/8 PART OF KIT P/N 13018180..... UOC:XBB	4
* 15	PAOZZ	5310015135413	80205	NASM35338-46	WASHER,LOCK 3/8 PART OF KIT P/N 13018185..... UOC:TTA	4
* 15	PAOZZ	5310015135413	80205	NASM35338-46	WASHER,LOCK 3/8 PART OF KIT P/N 13018180..... UOC:XBB	2
* 16	PFOZZ		19200	13014388	BRACKET,MOUNTING L.H. AND R.H. PART OF KIT P/N 13018185, PART OF KIT P/N 13018180..... UOC:TTA,XBB	2
* 17	PAOZZ	5305000680510	80204	B1821BH038C100N	SCREW,CAP,HEXAGON H 3/8-16 X 1.00 PART OF KIT P/N 13018185..... UOC:TTA	4
* 17	PAOZZ	5305000680510	80204	B1821BH038C100N	SCREW,CAP,HEXAGON H 3/8-16 X 1.00 PART OF KIT P/N 13018180..... UOC:XBB	2
* 18	PAOZZ	5305002693243	80204	B1821BH038F225N	SCREW,CAP,HEXAGON H 3/8-24 X 2.25 PART OF KIT P/N 13018185..... UOC:TTA	4
* 19	PAOZZ		39428	91253A357	SCREW,CAP,SOCKET HE 3/8-24 X 1.25 PART OF KIT P/N 13018180..... UOC:XBB	2

END OF FIGURE

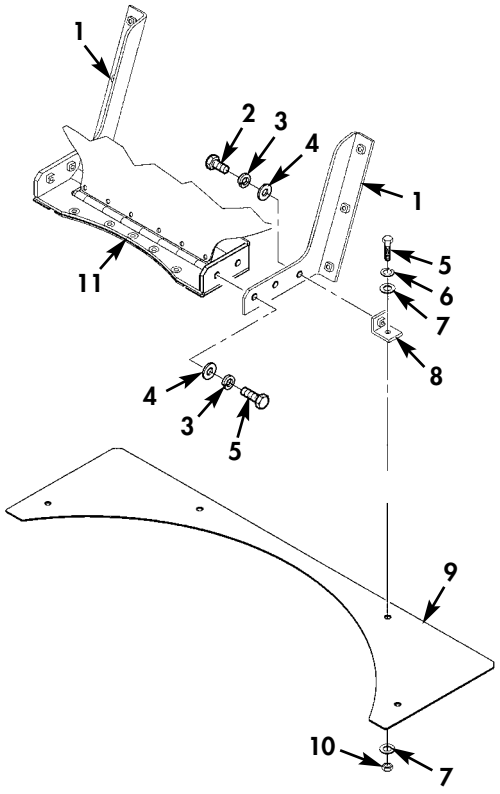

M1114

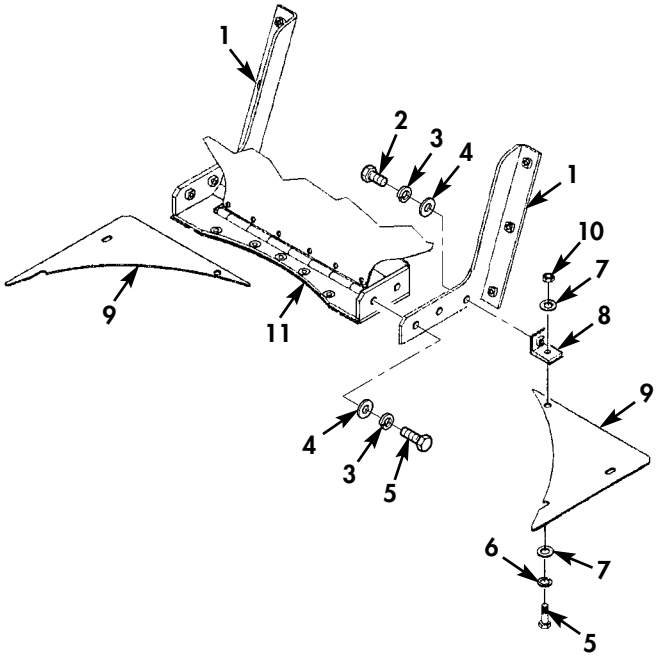

M1151

Figure 265C. O-GPK Cover Mounting, Base Plates, and Related Hardware.

(1) ITEM NO	(2) SMR CODE	(3) NSN	(4) CAGEC	(5) PART NUMBER	(6) DESCRIPTION AND USABLE ON CODES(UOC)	(7) QTY
					GROUP 3307 SPECIAL PURPOSE KITS	
					FIG. 265C O-GPK COVER MOUNTING, BASE PLATES,AND RELATED HARDWARE	
* 1	PAOZZ	5340015356843	6W728	6431617-200M1	BRACKET,ANGLE R.H. PART OF KIT P/N 13018185, PART OF KIT P/N 13018180.. UOC:TTA,XBB	1
* 1	PAOZZ	5340015359424	6W728	6431616-200M1	BRACKET,ANGLE L.H. PART OF KIT P/N 13018185, PART OF KIT P/N 13018180.. UOC:TTA,XBB	1
* 2	PAOZZ	5305000680510	80204	B1821BH038C100N	SCREW,CAP,HEXAGON H 3/8-16 X 1.00 PART OF KIT P/N 13018185, PART OF KIT P/N 13018180..... UOC:TTA,XBB	2
* 3	PAOZZ	5310014177273	6W728	4397004-008	WASHER,LOCK 3/8 PART OF KIT P/N 13018185, PART OF KIT P/N 13018180.. UOC:TTA,XBB	6
* 4	PAOZZ	5310014363742	6W728	4397005-015	WASHER,FLAT 3/8 PART OF KIT P/N 13018185, PART OF KIT P/N 13018180.. UOC:TTA,XBB	6
* 5	PAOZZ	5306014339197	6W728	4397000-062	BOLT,MACHINE 3/8-16 X 1.25 PART OF KIT P/N 13018185, PART OF KIT P/N 13018180..... UOC:TTA,XBB	6
* 6	PAOZZ	5310015135413	80205	NASM35338-46	WASHER,LOCK 3/8 PART OF KIT P/N 13018185, PART OF KIT P/N 13018180.. UOC:TTA,XBB	2
* 7	PAOZZ	5310000806004	96906	MS27183-14	WASHER,FLAT 3/8 PART OF KIT P/N 13018185, PART OF KIT P/N 13018180.. UOC:TTA,XBB	4
* 8	PAOZZ	5340015358702	6W728	6431611-200M1	BRACKET,ANGLE PART OF KIT P/N 13018185, PART OF KIT P/N 13018180.. UOC:TTA,XBB	2
* 9	PAOZZ		19200	13014376	PLATE,MOUNTING PART OF KIT P/N 13018180..... UOC:XBB	1
* 9	PAOZZ		19200	13014383	ARMOR,SUPPLEMENTAL PART OF KIT P/N 13018185..... UOC:TTA	2
* 10	PFOZZ	5310014398177	6W728	4397064-005	NUT,SELF-LOCKING,HE 3/8-16 PART OF KIT P/N 13018185, PART OF KIT P/N 13018180..... UOC:TTA,XBB	2
* 11	PFOZZ	5340015360005	6W728	6431637-200M1	BRACKET,MOUNTING PART OF KIT P/N 13018185, PART OF KIT P/N 13018180.. UOC:TTA,XBB	1

END OF FIGURE

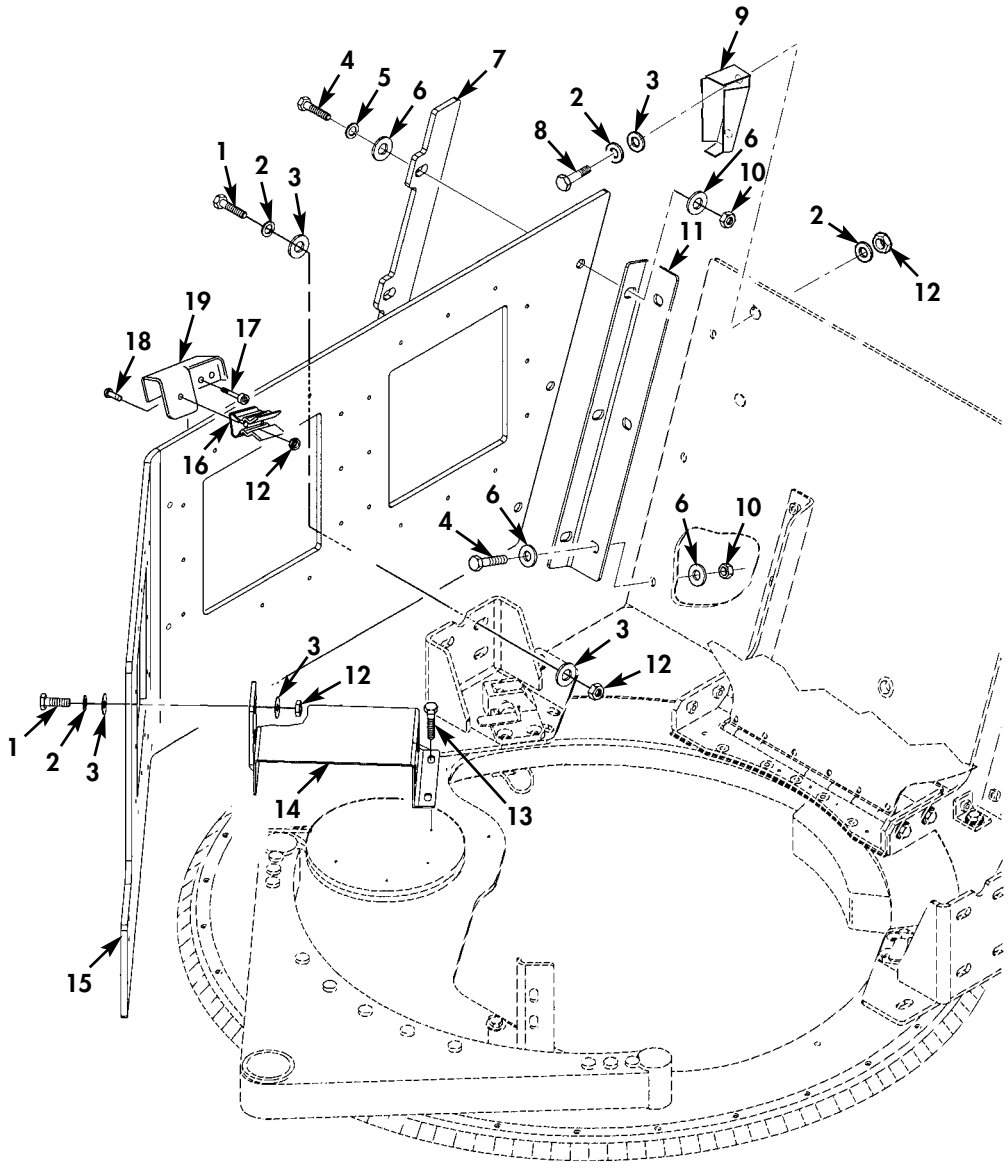

Figure 265D. O-GPK Armor Panels and Related Hardware.

(1) ITEM NO	(2) SMR CODE	(3) NSN	(4) CAGEC	(5) PART NUMBER	(6) DESCRIPTION AND USABLE ON CODES(UOC)	(7) QTY
					GROUP 3307 SPECIAL PURPOSE KITS	
					FIG. 265D O-GPK ARMOR PANELS AND RELATED HARDWARE	
* 1	PAOZZ	5305007252317	80204	B1821BH038C150N	SCREW,CAP,HEXAGON H 3/8-16 X 1.50 PART OF KIT P/N 13018185, PART OF KIT P/N 13018180..... UOC:TTA,XBB	10
* 2	PAOZZ	5310015135413	80205	NASM35338-46	WASHER,LOCK 3/8 PART OF KIT P/N 13018185, PART OF KIT P/N 13018180.. UOC:TTA,XBB	14
* 3	PAOZZ	5310000806004	96906	MS27183-14	WASHER,FLAT 3/8 PART OF KIT P/N 13018185, PART OF KIT P/N 13018180.. UOC:TTA,XBB	22
* 4	PAOZZ	5305000712071	80204	B1821BH050C200N	SCREW,CAP,HEXAGON H 1/2-13 X 2.00 PART OF KIT P/N 13018185, PART OF KIT P/N 13018180..... UOC:TTA,XBB	12
* 5	PAOZZ	5310005845272	80205	MS35338-48	WASHER,LOCK 1/2 PART OF KIT P/N 13018185, PART OF KIT P/N 13018180.. UOC:TTA,XBB	6
* 6	PAOZZ	5310011211703	24617	2436165	WASHER,FLAT 1/2 PART OF KIT P/N 13018185, PART OF KIT P/N 13018180.. UOC:TTA,XBB	24
* 7	PAOZZ		19200	13014382	ARMOR,SUPPLEMENTAL PART OF KIT P/N 13018185, PART OF KIT P/N 13018180.. UOC:TTA,XBB	2
* 8	PAOZZ	5305000680511	80204	B1821BH038C125N	SCREW,CAP,HEXAGON H 3/8-16 X 1.25 PART OF KIT P/N 13018185, PART OF KIT P/N 13018180..... UOC:TTA,XBB	2
* 9	PFOZZ		19200	13014405	BRACKET,VEHICULAR C PART OF KIT P/N 13018185, PART OF KIT P/N 13018180.. UOC:TTA,XBB	1
* 10	PAOZZ	5310004883889	96906	MS51943-39	NUT,SELF-LOCKING,HE 1/2-13 PART OF KIT P/N 13018185, PART OF KIT P/N 13018180..... UOC:TTA,XBB	12
* 11	PAOZZ		19200	13014375	BRACKET,ANGLE PART OF KIT P/N 13018185, PART OF KIT P/N 13018180.. UOC:TTA,XBB	2
* 12	PAOZZ	5310009359021	96906	MS51943-35	NUT,SELF-LOCKING,HE 3/8-16 PART OF KIT P/N 13018185, PART OF KIT P/N 13018180..... UOC:TTA,XBB	12
* 13	PAOZZ	5305002693247	6W728	4397001-071	SCREW,CAP,HEXAGON H 3/8-24 X 3.25 PART OF KIT P/N 13018185, PART OF KIT P/N 13018180..... UOC:TTA,XBB	2
* 14	PFOZZ		19200	13014404	BRACKET,MOUNTING PART OF KIT P/N 13018185, PART OF KIT P/N 13018180.. UOC:TTA,XBB	1

(1) ITEM NO	(2) SMR CODE	(3) NSN	(4) CAGEC	(5) PART NUMBER	(6) DESCRIPTION AND USABLE ON CODES(UOC)	(7) QTY
* 15	PAOZZ	9515015502387	19200	13014372	ARMOR PLATE R.H. PART OF KIT P/N 13018185, PART OF KIT P/N 13018180.. UOC:TTA,XBB	1
* 15	PAOZZ	9515015507253	19200	13014373	ARMOR PLATE L.H. PART OF KIT P/N 13018185, PART OF KIT P/N 13018180.. UOC:TTA,XBB	1
* 16	PAOZZ	5340013298582	19207	12367450	CLIP,SPRING TENSION PART OF KIT P/N 13018185, PART OF KIT P/N 13018180.. UOC:TTA,XBB	1
* 17	PFOZZ		39428	91251A382	SCREW,CAP,SOCKET HE 5/16-24 X 7/8 PART OF KIT P/N 13018185, PART OF KIT P/N 13018180..... UOC:TTA,XBB	2
* 18	PAOZZ	5305000680510	80204	B1821BH038C100N	SCREW,CAP,HEXAGON H 3/8-16 X 1.00 PART OF KIT P/N 13018185, PART OF KIT P/N 13018180..... UOC:TTA,XBB	1
* 19	PAOZZ		19200	13014415	BRACKET,MOUNTING M4 PART OF KIT P/N 13018185, PART OF KIT P/N 13018180.. UOC:TTA,XBB	1

END OF FIGURE

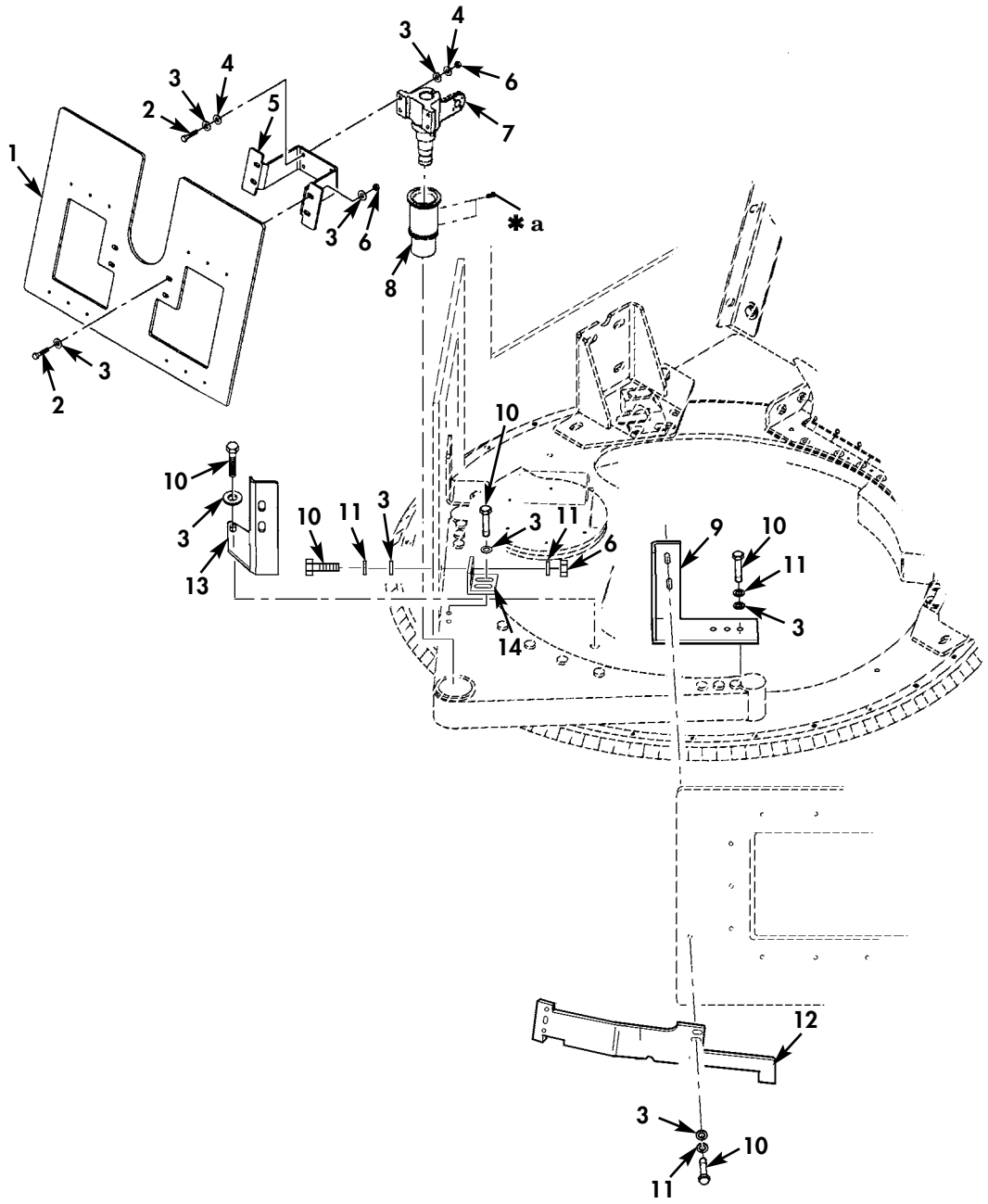

✱**a** PART OF ITEM 8

Figure 265E. O-GPK Gunner's Shield, Pintle Mount, Spacer, and Related Hardware.

(1) ITEM NO	(2) SMR CODE	(3) NSN	(4) CAGEC	(5) PART NUMBER	(6) DESCRIPTION AND USABLE ON CODES(UOC)	(7) QTY
					GROUP 3307 SPECIAL PURPOSE KITS	
					FIG. 265E O-GPK GUNNER'S SHIELD, PINTLE MOUNT, SPACER AND RELATED HARDEWARE	
* 1	PAOZZ		19200	13014420	ARMOR PLATE PART OF KIT P/N 13018185 PART OF KIT P/N 13018180..... UOC:TTA,XBB	1
* 2	PAOZZ	5305007252317	80204	B1821BH038C150N	SCREW,CAP,HEXAGON H 3/8-16 X 1.50 PART OF KIT P/N 13018185, PART OF KIT P/N 13018180..... UOC:TTA,XBB	8
* 3	PAOZZ	5310000806004	96906	MS27183-14	WASHER,FLAT 3/8 PART OF KIT P/N 13018185, PART OF KIT P/N 13018180.. UOC:TTA,XBB	26
* 4	PAOZZ	5310011191024	24617	2436162	WASHER,FLAT PART OF KIT P/N 13018185 PART OF KIT P/N 13018180..... UOC:TTA,XBB	8
* 5	PFOZZ		19200	13014395	BRACKET,VEHICULAR C USE WITH MK19,M2 AND M240 WEAPON SYSTEMS PART OF KIT P/N 13018185, PART OF KIT P/N 13018180..... UOC:TTA,XBB	1
* 5	PFOZZ		19200	13014397	BRACKET,VEHICULAR C USE WITH M2 AND M240 WEAPON SYSTEMS ONLY PART OF KIT P/N 13018185, PART OF KIT P/N 13018180..... UOC:TTA,XBB	1
* 6	PAOZZ	5310009359021	96906	MS51943-35	NUT,SELF-LOCKING,HE 3/8-16 PART OF KIT P/N 13018185, PART OF KIT P/N 13018180..... UOC:TTA,XBB	10
* 7	PAOZZ		19200	13014407	LATCH,PINTLE HOOK PART OF KIT P/N 13018185, PART OF KIT P/N 13018180.. UOC:TTA,XBB	1
* 8	PAOZZ		19200	13014377	SLEEVE,BEARING PART OF KIT P/N 13018185, PART OF KIT P/N 13018180.. UOC:TTA,XBB	1
* 9	PFOZZ		19200	13014379	BRACKET,VEHICULAR C PART OF KIT P/N 13018185, PART OF KIT P/N 13018180.. UOC:TTA,XBB	1
* 10	PAOZZ	5305007829489	80204	B1821BH038C200N	SCREW,CAP,HEXAGON H 3/8-16 X 2.00 PART OF KIT P/N 13018185, PART OF KIT P/N 13018180..... UOC:TTA,XBB	10
* 11	PAOZZ	5310015135413	80205	NASM35338-46	WASHER,LOCK 3/8 PART OF KIT P/N 13018185, PART OF KIT P/N 13018180.. UOC:TTA,XBB	9
* 12	PAOZZ		19200	13014378	ARMOR,SUPPLEMENTAL FRONT PART OF KIT P/N 13018185, PART OF KIT P/N 13018180..... UOC:TTA,XBB	1

(1) ITEM NO	(2) SMR CODE	(3) NSN	(4) CAGEC	(5) PART NUMBER	(6) DESCRIPTION AND USABLE ON CODES(UOC)	(7) QTY
* 13	PFOZZ		19200	13014380	BRACKET,VEHICULAR C L.H.,FRONT PART OF KIT P/N 13018185, PART OF KIT P/N 13018180..... UOC:TTA,XBB	1
* 14	PFOZZ		19200	13014381	BRACKET,VEHICULAR C PART OF KIT P/N 13018185, PART OF KIT P/N 13018180.. UOC:TTA,XBB	1

END OF FIGURE

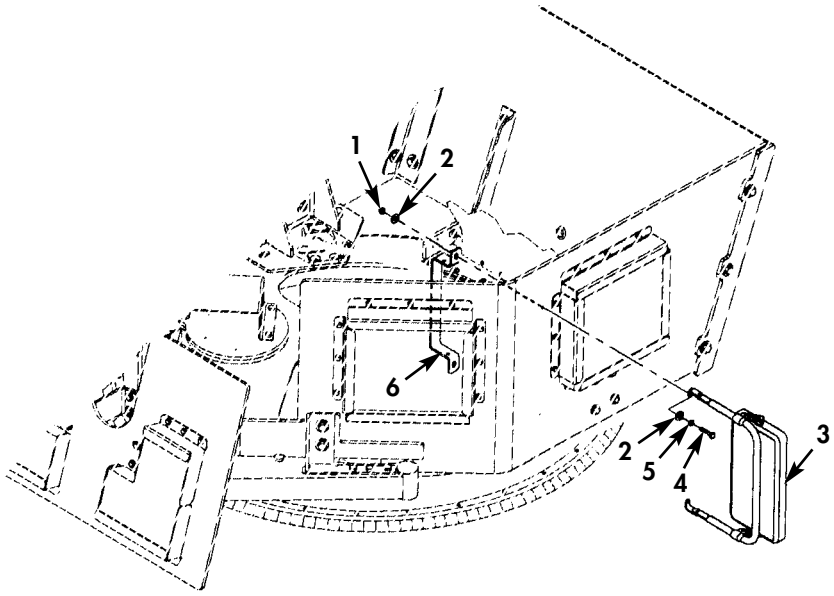

✱ QUANTITY SHOWN
REFLECTS ONE SIDE
✱ FOR BREAKDOWN OF ITEM 3
SEE FIGURE 230A

Figure 265F. O-GPK Mirror Assembly and Related Hardware.

(1) ITEM NO	(2) SMR CODE	(3) NSN	(4) CAGEC	(5) PART NUMBER	(6) DESCRIPTION AND USABLE ON CODES(UOC)	(7) QTY
					GROUP 3307 SPECIAL PURPOSE KITS	
					FIG. 265F O-GPK MIRROR ASSEMBLY AND RELATED HARDWARE	
* 1	PAOZZ	5310008140673	81349	M45913/3-5CG8C	NUT,SELF-LOCKING,HE 5/16-18 PART OF KIT P/N 13018185, PART OF KIT P/N 13018180..... UOC:TTA,XBB	2
* 2	PAOZZ	5310000814219	96906	MS27183-12	WASHER,FLAT 5/16 PART OF KIT P/N 13018185, PART OF KIT P/N 13018180.. UOC:TTA,XBB	4
* 3	PAOZZ	2540014112130	19207	12343061	MIRROR ASSEMBLY,REA LH PART OF KIT P/N 13018185, PART OF KIT P/N 13018180..... UOC:TTA,XBB	1
* 3	PAOZZ	2540013149379	19207	12342130	MIRROR ASSEMBLY,REA RH PART OF KIT P/N 13018185, PART OF KIT P/N 13018180..... UOC:TTA,XBB	1
* 4	PAOZZ	5305002264831	80204	B1821BH031C150N	SCREW,CAP,HEXAGON H 5/16-18 X 1.50 PART OF KIT P/N 13018185, PART OF KIT P/N 13018180..... UOC:TTA,XBB	2
* 5	PAOZZ	5310015232980	80205	NASM35338-45	WASHER,LOCK 5/16 PART OF KIT P/N 13018185, PART OF KIT P/N 13018180.. UOC:TTA,XBB	2
* 6	PAOZZ		19200	13014402	HANDLE,BOW PART OF KIT P/N 13018185 PART OF KIT P/N 13018180..... UOC:TTA,XBB	1

END OF FIGURE

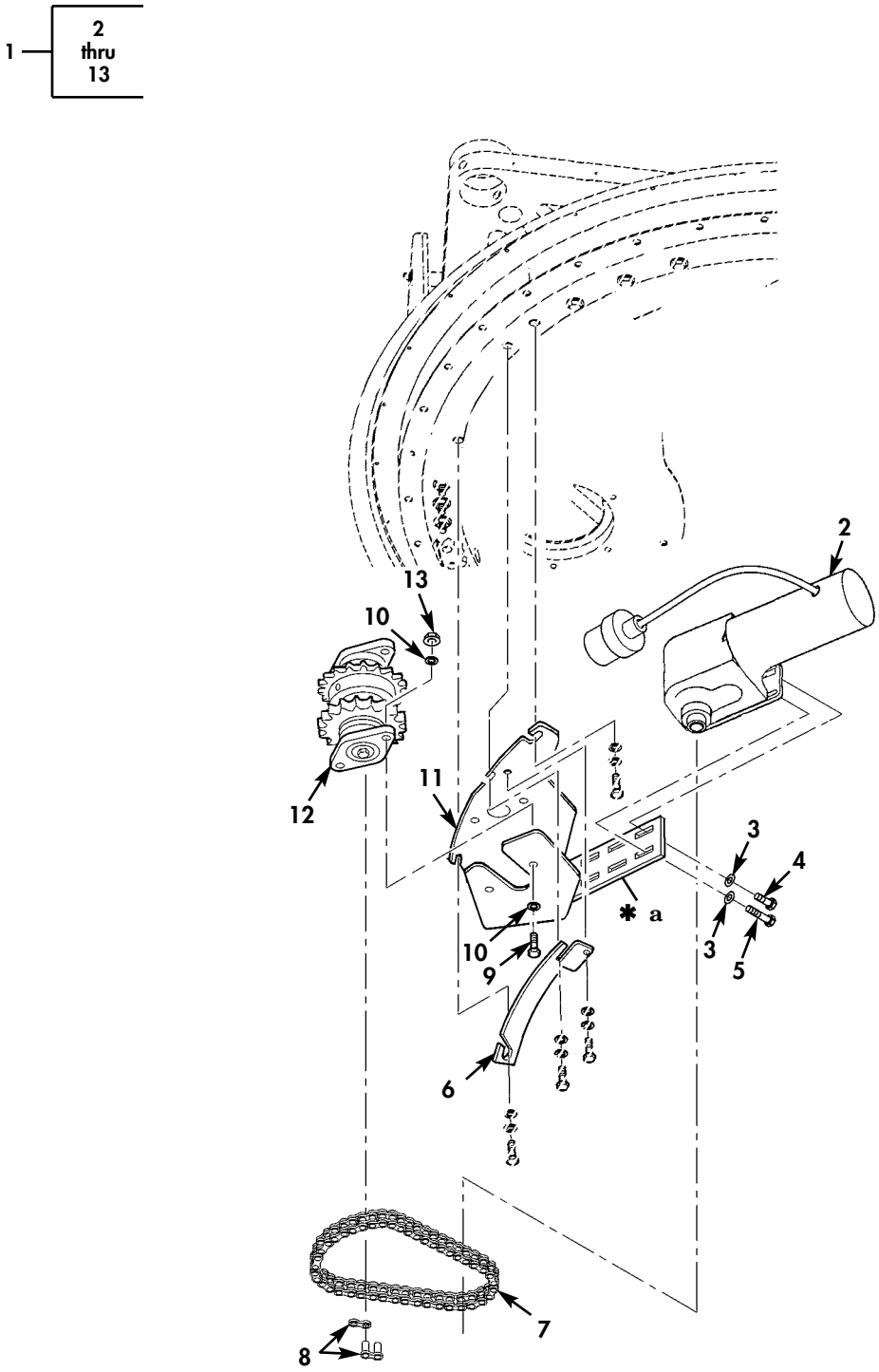

✱ **a** PART OF ITEM 11

Figure 265G. BPMTU Drive Motor Assembly and Related Hardware.

(1) ITEM NO	(2) SMR CODE	(3) NSN	(4) CAGEC	(5) PART NUMBER	(6) DESCRIPTION AND USABLE ON CODES(UOC)	(7) QTY
					GROUP 3307 SPECIAL PURPOSE KITS	
					FIG. 265G BPMTU DRIVE MOTOR ASSEMBLY AND RELATED HARDWARE	
* 1	PAOOO		6W728	6433255-01M1	MOTOR ASSEMBLY PART OF KIT P/N 13018180..... UOC:XBB	1
* 1	PAOOO		6W728	6438800-01M1	MOTOR ASSEMBLY PART OF KIT P/N 13018185..... UOC:TTA	1
* 2	PAOZZ	6105015525659	6W728	6434242-01M1	.MOTOR,DIRECT CURREN PART OF KIT P/N 13018185, PART OF KIT P/N 13018180.. UOC:TTA,XBB	1
* 3	PAOZZ		6W728	6434101-16M1	.WASHER,WEDGE PART OF KIT P/N 13018185, PART OF KIT P/N 13018180.. UOC:TTA,XBB	6
* 4	PAOZZ	5306014307399	6W728	4397000-006	.BOLT,MACHINE 1/4-20 X 3/4 PART OF KIT P/N 13018185, PART OF KIT P/N 13018180..... UOC:TTA,XBB	3
* 5	PAOZZ	5306014206635	6W728	4397000-012	.BOLT,MACHINE 1/4-20 X 1.50 PART OF KIT P/N 13018185, PART OF KIT P/N 13018180..... UOC:TTA,XBB	3
* 6	PAOZZ		6W728	6432501-01M1	.LOCK,DRIVE MOUNT PART OF KIT P/N 13018180..... UOC:XBB	1
* 6	PAOZZ		6W728	6437560-200M1	.LOCK,DRIVE UNIT PART OF KIT P/N 13018185..... UOC:TTA	1
* 7	PAOZZ		6W728	6432515-01M1	.CHAIN,ROLLER PART OF KIT P/N 13018185, PART OF KIT P/N 13018180.. UOC:TTA,XBB	1
* 8	PAOZZ		6W728	6432516-01M1	.LINK,CHAIN PART OF KIT P/N 13018180 PART OF KIT P/N 13018185..... UOC:TTA,XBB	1
* 9	PAOZZ	5306014339197	6W728	4397000-062	.BOLT,MACHINE 3/8-16 X 1.25 PART OF KIT P/N 13018185, PART OF KIT P/N 13018180..... UOC:TTA,XBB	4
* 10	PFOZZ	5310014192413	6W728	4397005-014	.WASHER,FLAT 3/8 PART OF KIT P/N 13018185, PART OF KIT P/N 13018180.. UOC:TTA,XBB	8
* 11	XAOZZ		6W728	6432497-01M1	.BRACKET,VEHICULAR C PART OF KIT P/N 13018180..... UOC:XBB	1
* 11	XAOZZ		6W728	6437652-200M1	.BRACKET,MOUNTING PART OF KIT P/N 13018185..... UOC:TTA	1
* 12	PAOZZ		6W728	6433249-01M1	.GEAR,CLUSTER PART OF KIT P/N 13018180..... UOC:XBB	1

(1) ITEM NO	(2) SMR CODE	(3) NSN	(4) CAGEC	(5) PART NUMBER	(6) DESCRIPTION AND USABLE ON CODES(UOC)	(7) QTY
* 12	PAOZZ		6W728	6437561-01M1	.GEAR,CLUSTER PART OF KIT P/N 13018185..... UOC:TTA	1
* 13	PFOZZ	5310014398177	6W728	4397064-005	.NUT,SELF-LOCKING,HE 3/8-16 PART OF KIT P/N 13018180 PART OF KIT P/N 13018185..... UOC:TTA,XBB	4

END OF FIGURE

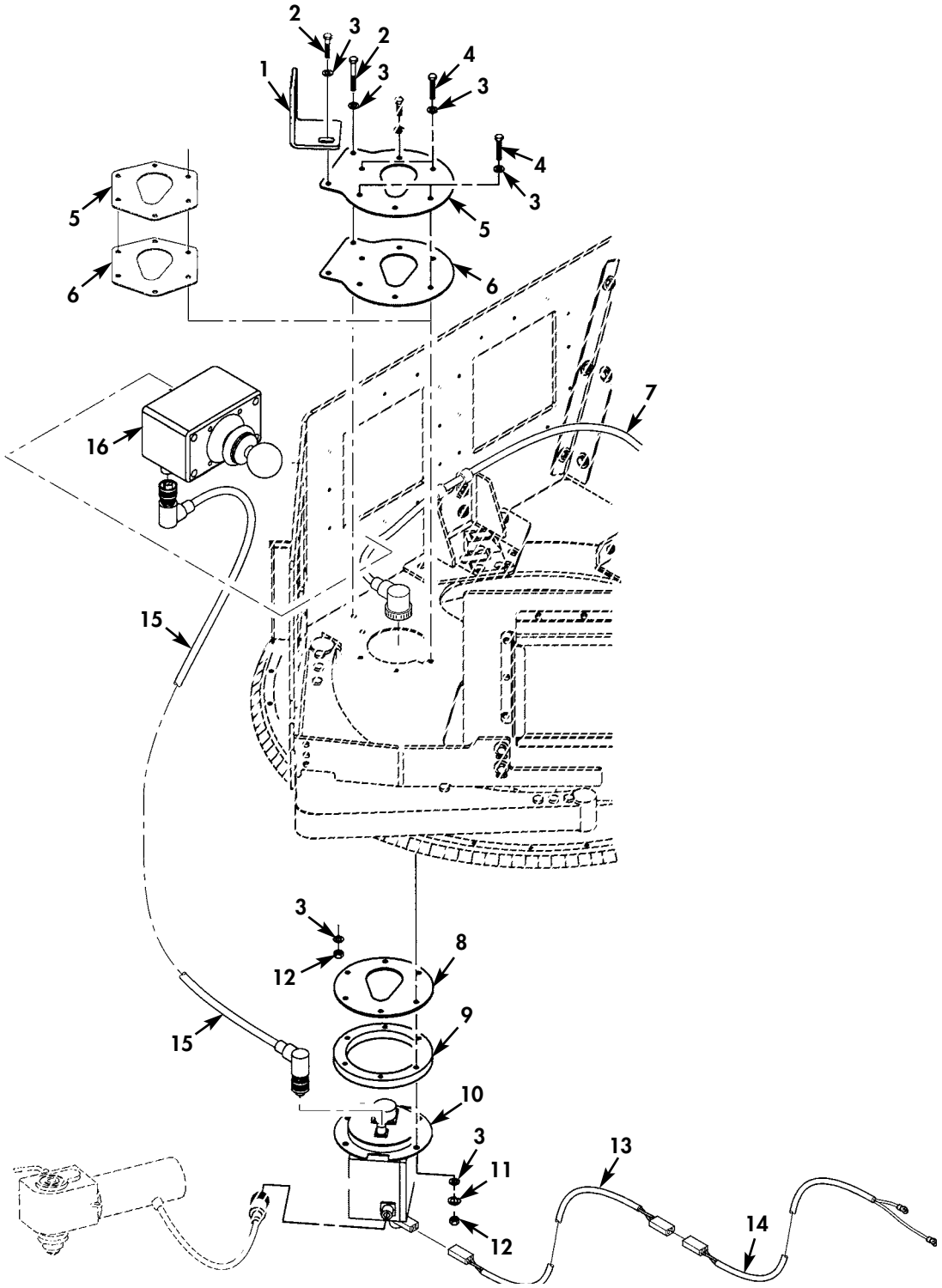

Figure 265H. Night Vision Cover Plate, BPMTU, and Related Hardware.

(1) ITEM NO	(2) SMR CODE	(3) NSN	(4) CAGEC	(5) PART NUMBER	(6) DESCRIPTION AND USABLE ON CODES(UOC)	(7) QTY
					GROUP 3307 SPECIAL PURPOSE KITS	
					FIG. 265H NIGHT VISION COVER PLATE, BPMTU,AND RELATED HARDWARE	
* 1	PFOZZ		19200	13014389	BRACKET,VEHICULAR C PART OF KIT P/N 13018185, PART OF KIT P/N 13018180.. UOC:TTA,XBB	1
* 2	PAOZZ	5305007813927	80204	B1821BH038C350N	SCREW,CAP,HEXAGON H 3/8-16 X 3.50 PART OF KIT P/N 13018185, PART OF KIT P/N 13018180..... UOC:TTA,XBB	2
* 3	PAOZZ	5310014192413	6W728	4397005-014	WASHER,FLAT 3/8 PART OF KIT P/N 13018185, PART OF KIT P/N 13018180.. UOC:TTA,XBB	11
* 4	PFOZZ		6W728	6432884-01M1	BOLT,MACHINE 3/8-16 X 2.00 PART OF KIT P/N 13018180..... UOC:XBB	4
* 5	PAOZZ		6W728	6437880-200M1	COVER,ACCESS UPPER PART OF KIT P/N 13018185..... UOC:TTA	1
* 5	PAOZZ		6W728	6432502-200M1	PLATE,MOUNTING PART OF KIT P/N 13018180..... UOC:XBB	1
* 6	PAOZZ		6W728	6432878-01M1	SEAL,COVER PLATE PART OF KIT P/N 13018180..... UOC:XBB	1
* 6	PAOZZ		6W728	6437881-01M1	SEAL,NONMETALLIC UPPER PART OF KIT P/N 13018185..... UOC:TTA	1
* 7	PAOZZ		6W728	6432531-01M1	WIRING HARNESS CONTROL BOX TO BATTERY PART OF KIT P/N 13018185, PART OF KIT P/N13018180..... UOC:TTA,XBB	1
* 8	PAOZZ		6W728	6435123-01M1	SEAL,CONTROL BOX LOWER PART OF KIT P/N 13018185, PART OF KIT P/N 13018180..... UOC:TTA,XBB	1
* 9	PAOZZ		6W728	1000325-002	NUT,STRIP PART OF KIT P/N 13018185.. PART OF KIT P/N 13018180..... UOC:TTA,XBB	1
* 10	PAOZZ	6110015524505	6W728	6437248-01M1	CONTROLLER,MOTOR PART OF KIT P/N 13018185, PART OF KIT P/N 13018180.. UOC:TTA,XBB	1
* 11	PAOZZ	5310014177273	6W728	4397004-008	WASHER,LOCK 3/8 PART OF KIT P/N 13018185, PART OF KIT P/N 13018180.. UOC:TTA,XBB	4
* 12	PAOZZ		6W728	6430529-06M1	NUT,PLAIN,HEXAGON 3/8-16 PART OF KIT P/N 13018185,PART OF KIT P/N 13018180..... UOC:TTA,XBB	5
* 13	PAOZZ		4B8D1	ASM000216	WIRING HARNESS,BRAN PART OF KIT P/N 13018185, PART OF KIT P/N 13018180.. UOC:TTA,XBB	1

(1) ITEM NO	(2) SMR CODE	(3) NSN	(4) CAGEC	(5) PART NUMBER	(6) DESCRIPTION AND USABLE ON CODES(UOC)	(7) QTY
* 14	PAOZZ		4B8D1	ASM000127	WIRING HARNESS FUSE TO BREAK AWAY CONNECTOR PART OF KIT P/N 13018185 PART OF KIT P/N 13018180..... UOC:TTA,XBB	1
* 15	PAOZZ	5310009359021	96906	MS51943-35	NUT,SELF-LOCKING,HE 3/8-16 PART OF KIT P/N 13018185..... UOC:TTA	2
* 15	PAOZZ	5310014373845	6W728	4397064-006	NUT,SELF-LOCKING,HE 3/8-24 PART OF KIT P/N 13018180..... UOC:XBB	2
* 16	PAOZZ		4B8D1	ASM000134	WIRING HARNESS,BRAN CONTROL BOX TO JOYSTICK PART OF KIT P/N 13018185 PART OF KIT P/N 13018180..... UOC:TTA,XBB	1
* 17	PAOZZ	1290015524497	6W728	6432528-200M1	JOYSTICK,DATA ENTRY PART OF KIT P/N 13018185, PART OF KIT P/N 13018180.. UOC:TTA,XBB	1

END OF FIGURE

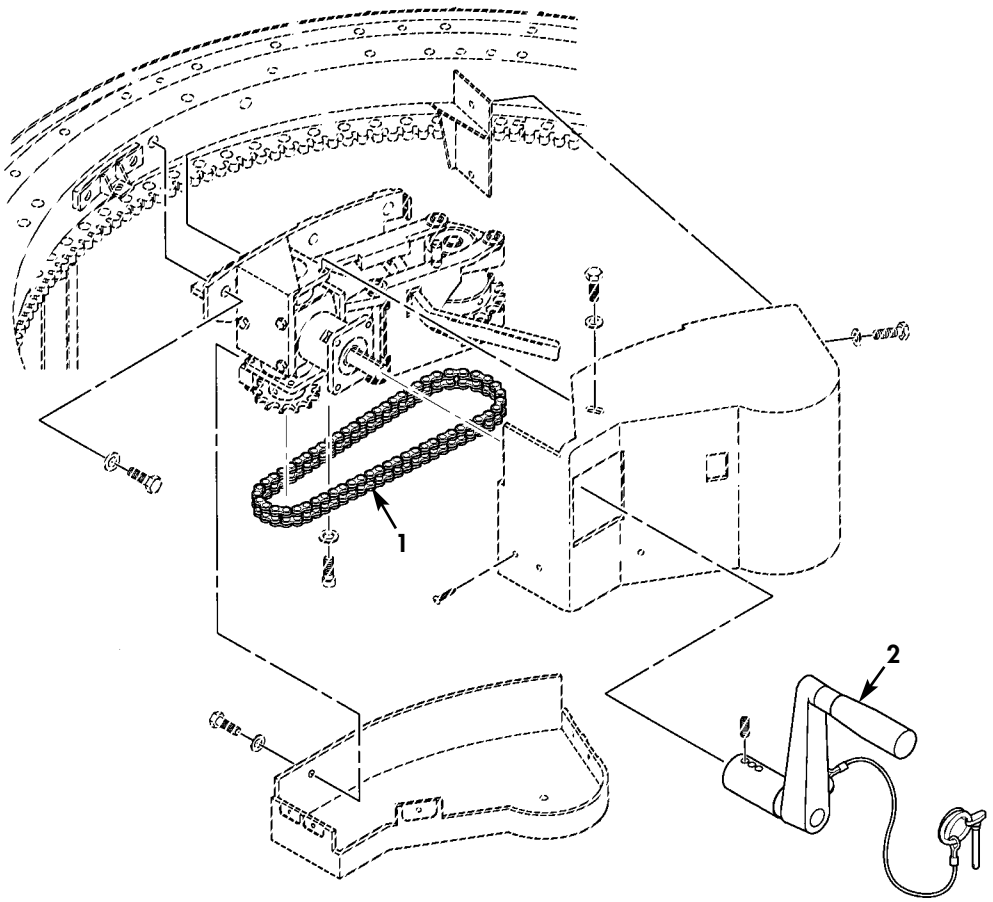

Figure 265I. O-GPK Manual Trasversing Assembly.

(1) ITEM NO	(2) SMR CODE	(3) NSN	(4) CAGEC	(5) PART NUMBER	(6) DESCRIPTION AND USABLE ON CODES(UOC)	(7) QTY
					GROUP 3307 SPECIAL PURPOSE KITS	
					FIG. 265I O-GPK MANUAL TRAVERSING ASSEMBLY	
* 1	PAOZZ		6W728	4662430	CHAIN,ROLLER PART OF KIT P/N 13018185, PART OF KIT P/N 13018180.. UOC:TTA,XBB	1
* 2	PAOZZ		6W728	6434829-01M1	HANDLE,MANUAL CONTR PART OF KIT P/N 13018185, PART OF KIT P/N 13018180.. UOC:TTA,XBB	1

END OF FIGURE

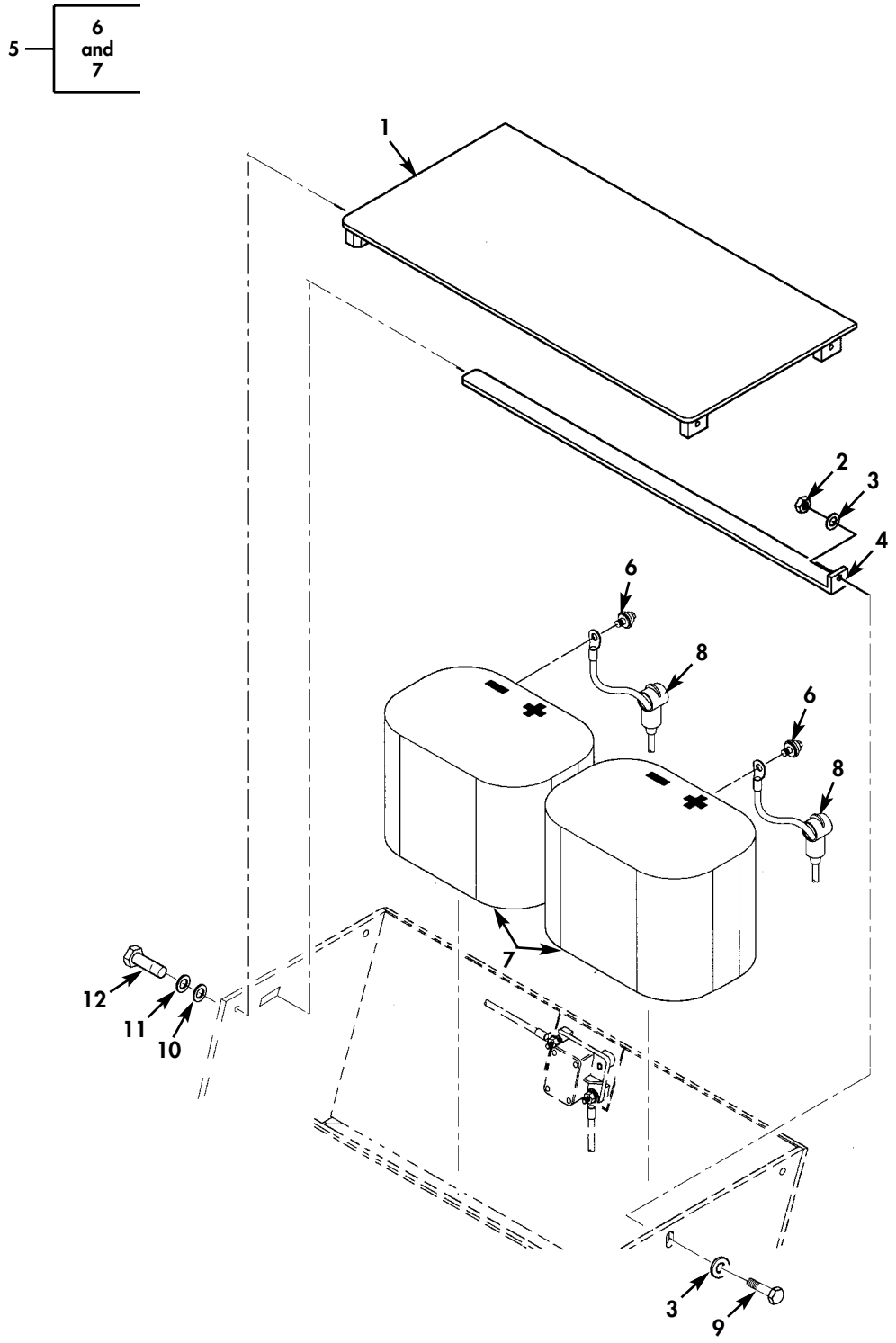

Figure 265J. BPMTU Battery Box, Batteries, Cables, and Related Parts (Sheet 1 of 2).

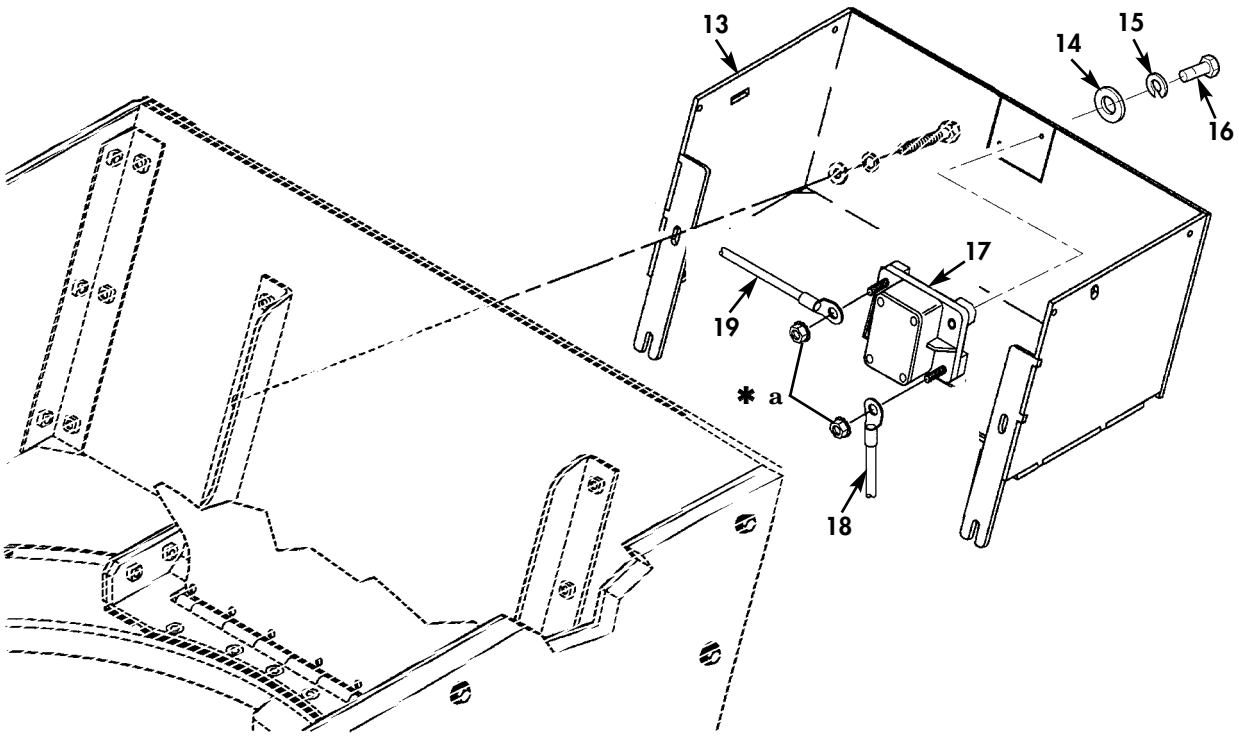

✱ **a** PART OF ITEM 17

Figure 265J. BPMTU Battery Box, Batteries, Cables, and Related Parts (Sheet 2 of 2).

(1) ITEM NO	(2) SMR CODE	(3) NSN	(4) CAGEC	(5) PART NUMBER	(6) DESCRIPTION AND USABLE ON CODES(UOC)	(7) QTY
					GROUP 3307 SPECIAL PURPOSE KITS	
					FIG. 265J BPMTU BATTERY BOX,BATTERY CABLES,AND RELATED PARTS	
* 1	PAOZZ		6W728	6435453-200M1	LID ASSEMBLY,BATTER PART OF KIT P/N 13018185, PART OF KIT P/N 13018180.. UOC:TTA,XBB	1
* 2	PAOZZ	5310014398172	6W728	4397064-003	NUT,SELF-LOCKING,HE 5/16-18 PART OF KIT P/N 13018185, PART OF KIT P/N PART OF KIT P/N 13018180..... UOC:TTA,XBB	1
* 3	PAOZZ	5310014229287	6W728	4397005-012	WASHER,FLAT 5/16 PART OF KIT P/N 13018185, PART OF KIT P/N 13018180.. UOC:TTA,XBB	2
* 4	PAOZZ		6W728	6432862-200M1	STRAP ASSEMBLY,BATT PART OF KIT P/N 13018185, PART OF KIT P/N 13018180.. UOC:TTA,XBB	1
* 5	PCOZA		6W728	6435049-01M1	BATTERY ASSEMBLY PART OF KIT P/N 13018185, PART OF KIT P/N 13018180.. UOC:TTA,XBB	1
* 6	PAOZZ		6W728	6432546-01M1	.BOLT,MACHINE 3/8-16 X 1.13 PART OF KIT P/N 13018185, PART OF KIT P/N PART OF KIT P/N 13018180..... UOC:TTA,XBB	4
* 7	XAOZZ		6W728	6432526-01M1	.BATTERY,STORAGE PART OF KIT P/N 13018185, PART OF KIT P/N 13018180.. UOC:TTA,XBB	2
* 8	PAOZZ		6W728	6432531-01M1	WIRING HARNESS BATTERY TO CONTROL BOX, PART OF KIT P/N 13018185, PART OF KIT P/N 13018180..... UOC:TTA,XBB	1
* 9	PAOZZ	5305014206637	6W728	4397000-034	SCREW,CAP,HEXAGON H 5/16-18 X 1.00 PART OF KIT P/N 13018185, PART OF KIT P/N 13018180..... UOC:TTA,XBB	1
* 10	PAOZZ	5310014357784	6W728	4397005-010	WASHER,FLAT 1/4 PART OF KIT P/N 13018185, PART OF KIT P/N 13018180.. UOC:TTA,XBB	4
* 11	PAOZZ	5310014330941	6W728	4397004-006	WASHER,LOCK 1/4 PART OF KIT P/N 13018185, PART OF KIT P/N 13018180.. UOC:TTA,XBB	4
* 12	PAOZZ	5306014339181	6W728	4397000-007	BOLT,MACHINE 1/4-20 X 7/8 PART OF KIT P/N 13018185, PART OF KIT P/N PART OF KIT P/N 13018180..... UOC:TTA,XBB	4
* 13	PAOZZ		6W728	6435451-200M1	BATTERY BOX W/O LID PART OF KIT P/N 13018185, PART OF KIT P/N 13018180.. UOC:TTA,XBB	1
* 14	PAOZZ	5310014177333	6W728	4397005-008	WASHER,FLAT #10 PART OF KIT P/N 13018185, PART OF KIT P/N 13018180.. UOC:TTA,XBB	2
* 15	PAOZZ	5310014341385	6W728	4397004-005	WASHER,LOCK #10 PART OF KIT P/N 13018185, PART OF KIT P/N 13018180.. UOC:TTA,XBB	2

(1) ITEM NO	(2) SMR CODE	(3) NSN	(4) CAGEC	(5) PART NUMBER	(6) DESCRIPTION AND USABLE ON CODES(UOC)	(7) QTY
* 16	PFOZZ		6W728	4397013-076	SCREW,MACHINE #10-32 X 1.00 PART OF KIT P/N 13018185, PART OF KIT P/N PART OF KIT P/N 13018180..... UOC:TTA,XBB	2
* 17	PAOZZ	5920015524502	6W728	6432525-01M1	FUSE LINK,ELECTRICA FUSE,60 AMP PART OF KIT P/N 13018185, PART OF KIT P/N PART OF KIT P/N 13018180..... UOC:TTA,XBB	1
* 18	PAOZZ		4B8D1	ASM000131	CABLE ASSEMBLY FUSE TO AUXILLIARY BATTERY 1 POSITIVE PART OF KIT P/N 13018185, PART OF KIT P/N 13018180.. UOC:TTA,XBB	1
* 19	PAOZZ		4B8D1	ASM000125	CABLE ASSEMBLY FUSE TO AUXILLIARY BATTERY PART OF KIT P/N 13018185 PART OF KIT P/N 13018180..... UOC:TTA,XBB	1

END OF FIGURE

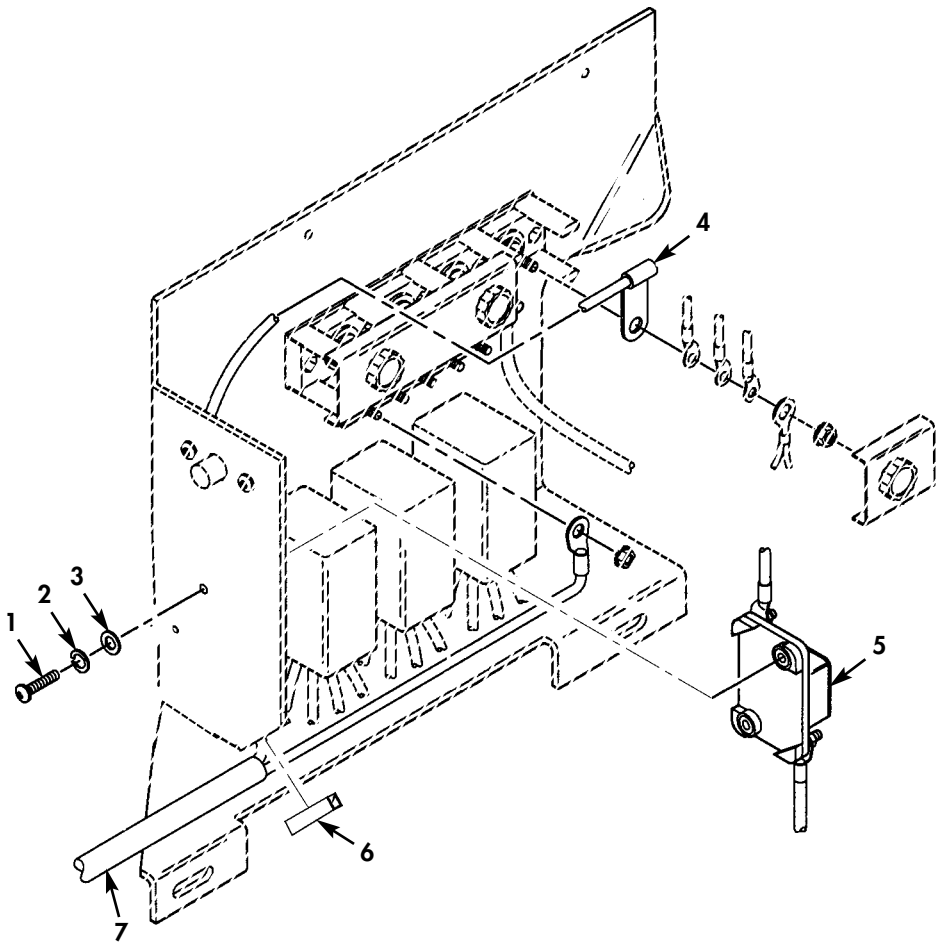

Figure 265K. BPMTU Power Supply Cables.

(1) ITEM NO	(2) SMR CODE	(3) NSN	(4) CAGEC	(5) PART NUMBER	(6) DESCRIPTION AND USABLE ON CODES(UOC)	(7) QTY
					GROUP 3307 SPECIAL PURPOSE KITS	
					FIG. 265K BPMTU POWER SUPPLY CABLES	
* 1	PAOZZ	5305014340831	6W728	4397013-074	SCREW,MACHINE #10-32 X 3/4 PART OF KIT P/N 13018185, PART OF KIT P/N 13018180..... UOC:TTA,XBB	2
* 2	PAOZZ	5310014341385	6W728	4397004-005	WASHER,LOCK #10 PART OF KIT P/N 13018185, PART OF KIT P/N 13018180.. UOC:TTA,XBB	2
* 3	PAOZZ	5310014177333	6W728	4397005-008	WASHER,FLAT #10 PART OF KIT P/N 13018185, PART OF KIT P/N 13018180.. UOC:TTA,XBB	2
* 4	PAOZZ		4B8D1	ASM000130	CABLE ASSEMBLY,POWE 24V DC BUSS TO FUSE,RED PART OF KIT P/N 13018185 PART OF KIT P/N 13018180..... UOC:TTA,XBB	1
* 5	PAOZZ	5920015524502	6W728	6432525-01M1	FUSE LINK,ELECTRICA FUSE,60 AMP PART OF KIT P/N 13018185, PART OF KIT P/N 13018180..... UOC:TTA,XBB	1
* 6	MOOZZ		6W728	1000049-003-1.75	TRIM,EDGE MAKE FROM TRIM EDGE P/N 8451A22,1.75 INCHES LONG PART OF KIT P/N 13018185, PART OF KIT P/N 13018180..... UOC:TTA,XBB	1
* 7	PAOZZ		4B8D1	ASM000127	WIRING HARNESS FUSE TO BREAK AWAY CONNECTOR PART OF KIT P/N 13018185 PART OF KIT P/N 13018180..... UOC:TTA,XBB	1

END OF FIGURE

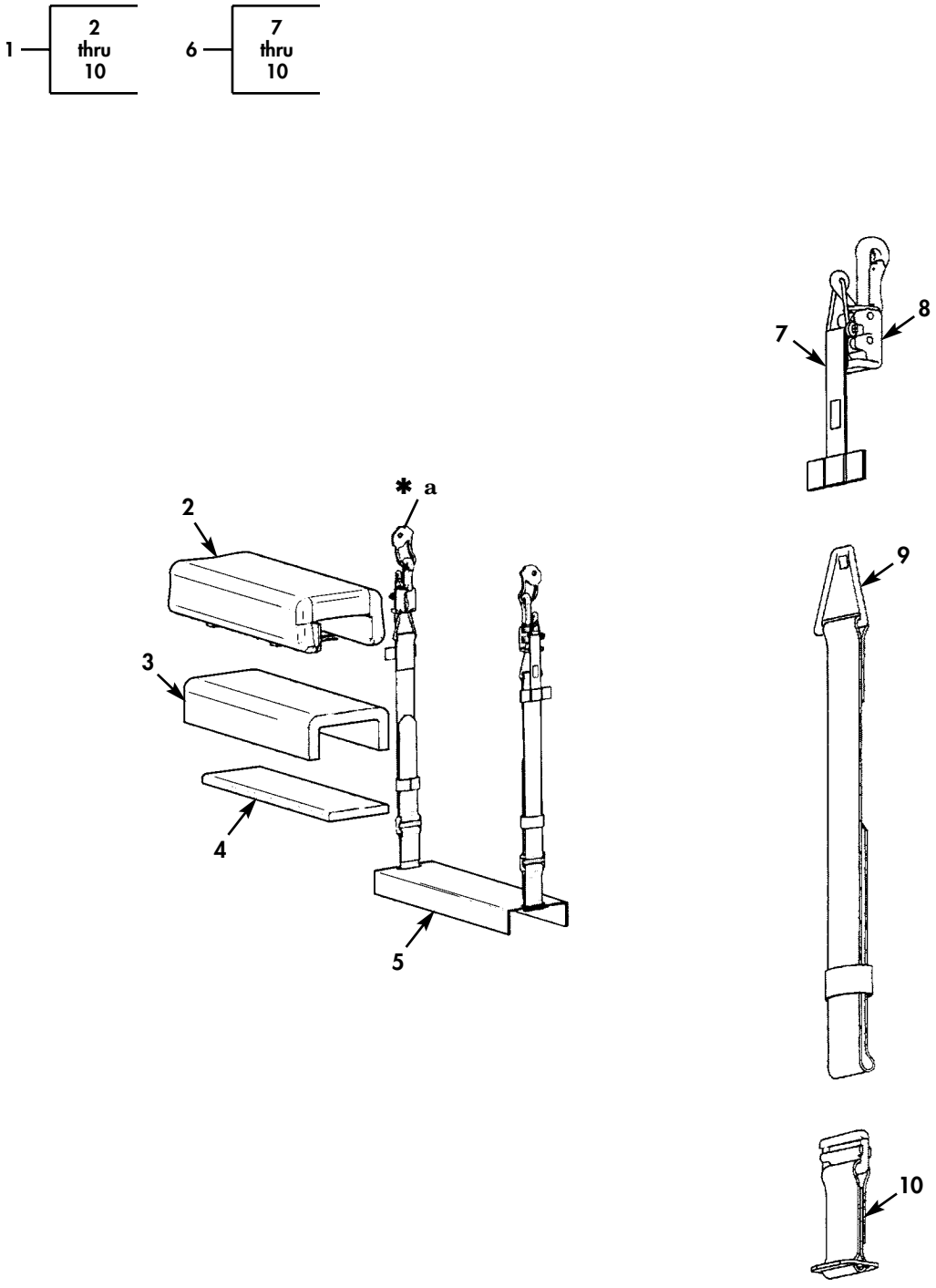

✱ **a** PART OF ITEM 1

Figure 265L. O-GPK Seat Assembly and Straps.

(1) ITEM NO	(2) SMR CODE	(3) NSN	(4) CAGEC	(5) PART NUMBER	(6) DESCRIPTION AND USABLE ON CODES(UOC)	(7) QTY
					GROUP 3307 SPECIAL PURPOSE KITS	
					FIG. 265L O-GPK SEAT ASSEMBLY AND STRAPS	
* 1	PAOOO	2540015507246	19200	13014413	SEAT,VEHICULAR PART OF KIT P/N 13018185, PART OF KIT P/N 13018180.. UOC:TTA,XBB	1
* 2	PFOZZ		19200	13015470	.SEAT,VEHICULAR PART OF KIT P/N 13018185, PART OF KIT P/N 13018180.. UOC:TTA,XBB	1
* 3	PFOZZ		19200	13015469	.CUSHION,SEAT,VEHICU PART OF KIT P/N 13018185, PART OF KIT P/N 13018180.. UOC:TTA,XBB	1
* 4	PFOZZ		19200	13015468	.CUSHION,SEAT,VEHICU PART OF KIT P/N 13018185, PART OF KIT P/N 13018180.. UOC:TTA,XBB	1
* 5	PFOZZ		19200	13015465	.PLATE,SEAT BASE PART OF KIT P/N 13018185, PART OF KIT P/N 13018180.. UOC:TTA,XBB	1
* 6	PFOOO		19200	13015473	.STRAP,WEBBING PART OF KIT P/N 13018185, PART OF KIT P/N 13018180.. UOC:TTA,XBB	2
* 7	PAOZZ		19200	13015488	..LANYARD PART OF KIT P/N 13018180 PART OF KIT P/N 13018180..... UOC:TTA,XBB	2
* 8	PAOZZ		19200	13015487	..BRACKET,MOUNTING PART OF KIT P/N 13018185, PART OF KIT P/N 13018180.. UOC:TTA,XBB	2
* 9	PAOZZ		19200	13015474	..BELT,VEHICULAR,SAFE PART OF KIT P/N 13018185, PART OF KIT P/N 13018180..... UOC:TTA,XBB	2
* 10	PAOZZ		19200	13015481	..BELT,VEHICULAR,SAFE PART OF KIT P/N 13018185, PART OF KIT P/N 13018180..... UOC:TTA,XBB	2
KIT	PAOZZ	2540015438325	19200	13018180	ARMOR SET,SUPPLEMEN..... UOC:XBB	1
					ARMOR PLATE (1) 265D - 15	
					ARMOR PLATE (1) 265D - 15	
					ARMOR PLATE (1) 265E - 1	
					ARMOR PLATE (1) 265B - 4	
					ARMOR,SUPPLEMENTAL (1) 265E - 12	
					ARMOR,SUPPLEMENTAL (2) 265D - 7	
					BATTERY ASSEMBLY (1) 265J - 5	
					BATTERY BOX (1) 265J - 13	
					BATTERY,STORAGE (2) 265J - 7	
					BELT,VEHICULAR,SAFE (2) 265L - 9	
					BELT,VEHICULAR,SAFE (2) 265L - 10	
					BOLT,MACHINE (3) 265G - 5	
					BOLT,MACHINE (3) 265G - 4	
					BOLT,MACHINE (4) 265H - 4	
					BOLT,MACHINE (4) 265J - 6	

(1) ITEM NO	(2) SMR CODE	(3) NSN	(4) CAGEC	(5) PART NUMBER	(6) DESCRIPTION AND USABLE ON CODES(UOC)	(7) QTY
					BOLT,MACHINE (4) 265J	12
					BOLT,MACHINE (4) 265G	9
					BOLT,MACHINE (6) 265C	5
					BOLT,MACHINE (60) 265A	9
					BRACKET ASSEMBLY (1) 265D	16
					BRACKET,ANGLE (1) 265C	1
					BRACKET,ANGLE (1) 265C	1
					BRACKET,ANGLE (2) 265D	11
					BRACKET,ANGLE (2) 265C	8
					BRACKET,DOUBLE ANGL (10) 265A	7
					BRACKET,MOUNTING (1) 265C	11
					BRACKET,MOUNTING (1) 265D	14
					BRACKET,MOUNTING (1) 265D	20
					BRACKET,MOUNTING (2) 265B	16
					BRACKET,MOUNTING (2) 265L	8
					BRACKET,VEHICULAR C (1) 265E	13
					BRACKET,VEHICULAR C (1) 265E	9
					BRACKET,VEHICULAR C (1) 265D	9
					BRACKET,VEHICULAR C (1) 265G	11
					BRACKET,VEHICULAR C (1) 265E	5
					BRACKET,VEHICULAR C (1) 265H	1
					BRACKET,VEHICULAR C (1) 265E	5
					BRACKET,VEHICULAR C (1) 265E	14
					BRACKET,VEHICULAR C (10) 265A	11
					BRACKET,VEHICULAR C (2) 265A	12
					BRACKET,VEHICULAR C (2) 265A	3
					CABLE ASSEMBLY (1) 265J	18
					CABLE ASSEMBLY (1) 265J	19
					CABLE ASSEMBLY,POWE (1) 265K	4
					CHAIN (1) 265G	7
					CHAIN,ROLLER (1) 265I	1
					CLIP,SPRING TENSION (1) 265D	17
					CONTROLLER,MOTOR (1) 265H	10
					CUSHION,SEAT,VEHICU (1) 265L	4
					CUSHION,SEAT,VEHICU (1) 265L	3
					FUSE LINK,ELECTRICA (1) 265K	5
					FUSE LINK,ELECTRICA (1) 265J	17
					GEAR,CLUSTER (1) 265G	12
					GROMMET,NONMETALLIC (1) 265B	9
					HANDLE,BOW (1) 265F	6
					HANDLE,MANUAL CONTR (1) 265I	2
					HOOK,VELCRO (3) 265A	6
					JOYSTICK,DATA ENTRY (1) 265H	17
					LANYARD (2) 265L	7
					LATCH,PINTLE HOOK (1) 265E	7
					LID ASSEMBLY,BATTER (1) 265J	1
					LINK,CHAIN (1) 265G	8
					LOCK,DRIVE MOUNT (1) 265G	6
					MIRROR ASSEMBLY,REA (1) 265F	3
					MIRROR ASSEMBLY,REA (1) 265F	3
					MOTOR ASSEMBLY (1) 265G	1
					MOTOR,DIRECT CURREN (1) 265G	2
					NUT,PLAIN,HEXAGON (4) 265H	12
					NUT,SELF-LOCKING,HE (1) 265J	2

(1) ITEM NO	(2) SMR CODE	(3) NSN	(4) CAGEC	(5) PART NUMBER	(6) DESCRIPTION AND USABLE ON CODES(UOC)	(7) QTY
					NUT,SELF-LOCKING,HE (10) 265E	6
					NUT,SELF-LOCKING,HE (12) 265D	12
					NUT,SELF-LOCKING,HE (12) 265D	10
					NUT,SELF-LOCKING,HE (2) 265B	13
					NUT,SELF-LOCKING,HE (2) 265C	10
					NUT,SELF-LOCKING,HE (2) 265F	1
					NUT,SELF-LOCKING,HE (2) 265H	15
					NUT,SELF-LOCKING,HE (4) 265G	13
					NUT,SELF-LOCKING,HE (4) 265B	13
					NUT,SELF-LOCKING,HE (5) 265B	11
					NUT,SELF-LOCKING,HE (6) 265B	1
					NUT,STRIP (1) 265H	9
					PERISCOPE,ARMORED V (1) 265A	4
					PERISCOPE,ARMORED V (1) 265A	4
					PERISCOPE,ARMORED V (5) 265A	8
					PLATE,IDENTIFICATIO (1) 265B	8
					PLATE,MOUNTING (1) 265H	5
					PLATE,MOUNTING (1) 265C	9
					PLATE,SEAT BASE (1) 265L	5
					POUCH,STORAGE (1) 265A	5
					SCREW,CAP,HEXAGON H (1) 265J	9
					SCREW,CAP,HEXAGON H (10) 265D	1
					SCREW,CAP,HEXAGON H (10) 265E	10
					SCREW,CAP,HEXAGON H (12) 265A	1
					SCREW,CAP,HEXAGON H (2) 265D	8
					SCREW,CAP,HEXAGON H (2) 265D	13
					SCREW,CAP,HEXAGON H (2) 265B	17
					SCREW,CAP,HEXAGON H (2) 265F	4
					SCREW,CAP,HEXAGON H (2) 265C	2
					SCREW,CAP,HEXAGON H (2) 265H	2
					SCREW,CAP,HEXAGON H (4) 265B	18
					SCREW,CAP,HEXAGON H (6) 265B	7
					SCREW,CAP,HEXAGON H (6) 265D	4
					SCREW,CAP,HEXAGON H (6) 265B	3
					SCREW,CAP,HEXAGON H (8) 265E	2
					SCREW,CAP,SOCKET HE (2) 265D	18
					SCREW,CAP,SOCKET HE (2) 265B	19
					SCREW,MACHINE (2) 265K	1
					SCREW,MACHINE (2) 265J	16
					SCREW,MACHINE (5) 265B	10
					SEAL,CONTROL BOX (1) 265H	8
					SEAL,COVER PLATE (1) 265H	6
					SEAT,VEHICULAR (1) 265L	2
					SEAT,VEHICULAR (1) 265L	1
					SLEEVE,BEARING (1) 265E	8
					STRAP ASSEMBLY,BATT (1) 265J	4
					STRAP,WEBBING (2) 265L	6
					TRIM,EDGE (1) 265K	6
					WASHER,FLAT (11) 265H	3
					WASHER,FLAT (12) 265B	2
					WASHER,FLAT (2) 265J	3
					WASHER,FLAT (2) 265K	3
					WASHER,FLAT (2) 265J	14
					WASHER,FLAT (22) 265D	3

(1) ITEM NO	(2) SMR CODE	(3) NSN	(4) CAGEC	(5) PART NUMBER	(6) DESCRIPTION AND USABLE ON CODES(UOC)	(7) QTY
					WASHER,FLAT (24) 265D - 6	
					WASHER,FLAT (26) 265E - 3	
					WASHER,FLAT (4) 265B - 14	
					WASHER,FLAT (4) 265J - 10	
					WASHER,FLAT (4) 265C - 7	
					WASHER,FLAT (4) 265F - 2	
					WASHER,FLAT (5) 265B - 12	
					WASHER,FLAT (6) 265C - 4	
					WASHER,FLAT (6) 265B - 5	
					WASHER,FLAT (8) 265G - 10	
					WASHER,FLAT (8) 265E - 4	
					WASHER,LOCK (12) 265A - 2	
					WASHER,LOCK (14) 265D - 2	
					WASHER,LOCK (2) 265J - 15	
					WASHER,LOCK (2) 265C - 6	
					WASHER,LOCK (2) 265K - 2	
					WASHER,LOCK (2) 265F - 5	
					WASHER,LOCK (2) 265B - 15	
					WASHER,LOCK (4) 265H - 11	
					WASHER,LOCK (4) 265J - 11	
					WASHER,LOCK (6) 265C - 3	
					WASHER,LOCK (6) 265B - 6	
					WASHER,LOCK (6) 265D - 5	
					WASHER,LOCK (60) 265A - 10	
					WASHER,LOCK (9) 265E - 11	
					WASHER,WEDGE (6) 265G - 3	
					WIRING HARNESS (1) 265H - 14	
					WIRING HARNESS (1) 265H - 7	
					WIRING HARNESS (1) 265J - 8	
					WIRING HARNESS (1) 265K - 7	
					WIRING HARNESS,BRAN (1) 265H - 16	
					WIRING HARNESS,BRAN (1) 265H - 13	
KIT	PAOZZ	2540015585467	19200	13018185	ARMOR SET,SUPPLEMEN.....	1
					UOC:TTA	
					ARMOR PLATE (1) 265D - 15	
					ARMOR PLATE (1) 265D - 15	
					ARMOR PLATE (1) 265E - 1	
					ARMOR PLATE (1) 265B - 4	
					ARMOR,SUPPLEMENTAL (1) 265E - 12	
					ARMOR,SUPPLEMENTAL (2) 265C - 9	
					ARMOR,SUPPLEMENTAL (2) 265D - 7	
					BATTERY ASSEMBLY (1) 265J - 5	
					BATTERY BOX (1) 265J - 13	
					BATTERY,STORAGE (2) 265J - 7	
					BELT,VEHICULAR,SAFE (2) 265L - 9	
					BELT,VEHICULAR,SAFE (2) 265L - 10	
					BOLT,MACHINE (3) 265G - 5	
					BOLT,MACHINE (3) 265G - 4	
					BOLT,MACHINE (4) 265H - 4	
					BOLT,MACHINE (4) 265J - 6	
					BOLT,MACHINE (4) 265J - 12	
					BOLT,MACHINE (4) 265G - 9	
					BOLT,MACHINE (6) 265C - 5	
					BOLT,MACHINE (60) 265A - 9	
					BRACKET ASSEMBLY (1) 265D - 16	

(1) ITEM NO	(2) SMR CODE	(3) NSN	(4) CAGEC	(5) PART NUMBER	(6) DESCRIPTION AND USABLE ON CODES(UOC)	(7) QTY
					BRACKET,ANGLE (1) 265C	1
					BRACKET,ANGLE (1) 265C	1
					BRACKET,ANGLE (2) 265D	11
					BRACKET,ANGLE (2) 265C	8
					BRACKET,DOUBLE ANGL (10) 265A	7
					BRACKET,MOUNTING (1) 265C	11
					BRACKET,MOUNTING (1) 265D	14
					BRACKET,MOUNTING (1) 265G	11
					BRACKET,MOUNTING (1) 265D	20
					BRACKET,MOUNTING (2) 265B	16
					BRACKET,MOUNTING (2) 265L	8
					BRACKET,VEHICULAR C (1) 265E	13
					BRACKET,VEHICULAR C (1) 265E	9
					BRACKET,VEHICULAR C (1) 265D	9
					BRACKET,VEHICULAR C (1) 265E	5
					BRACKET,VEHICULAR C (1) 265H	1
					BRACKET,VEHICULAR C (1) 265E	5
					BRACKET,VEHICULAR C (1) 265E	14
					BRACKET,VEHICULAR C (10) 265A	11
					BRACKET,VEHICULAR C (2) 265A	12
					BRACKET,VEHICULAR C (2) 265A	3
					CABLE ASSEMBLY (1) 265J	18
					CABLE ASSEMBLY (1) 265J	19
					CABLE ASSEMBLY,POWE (1) 265K	4
					CHAIN (1) 265G	7
					CHAIN,ROLLER (1) 265I	1
					CLIP,SPRING TENSION (1) 265D	17
					CONTROLLER,MOTOR (1) 265H	10
					COVER,ACCESS (1) 265H	5
					CUSHION,SEAT,VEHICU (1) 265L	4
					CUSHION,SEAT,VEHICU (1) 265L	3
					FUSE LINK,ELECTRICA (1) 265K	5
					FUSE LINK,ELECTRICA (1) 265J	17
					GEAR,CLUSTER (1) 265G	12
					GROMMET,NONMETALLIC (1) 265B	9
					HANDLE,BOW (1) 265F	6
					HANDLE,MANUAL CONTR (1) 265I	2
					HOOK,VELCRO (3) 265A	6
					JOYSTICK,DATA ENTRY (1) 265H	17
					LANYARD (2) 265L	7
					LATCH,PINTLE HOOK (1) 265E	7
					LID ASSEMBLY,BATTER (1) 265J	1
					LOCK,DRIVE UNIT (1) 265G	6
					MIRROR ASSEMBLY,REA (1) 265F	3
					MIRROR ASSEMBLY,REA (1) 265F	3
					MOTOR ASSEMBLY (1) 265G	1
					MOTOR,DIRECT CURREN (1) 265G	2
					NUT,PLAIN,HEXAGON (4) 265H	12
					NUT,SELF-LOCKING,HE (1) 265J	2
					NUT,SELF-LOCKING,HE (10) 265E	6
					NUT,SELF-LOCKING,HE (12) 265D	12
					NUT,SELF-LOCKING,HE (12) 265D	10
					NUT,SELF-LOCKING,HE (2) 265H	15
					NUT,SELF-LOCKING,HE (2) 265B	13

(1) ITEM NO	(2) SMR CODE	(3) NSN	(4) CAGEC	(5) PART NUMBER	(6) DESCRIPTION AND USABLE ON CODES(UOC)	(7) QTY
					NUT,SELF-LOCKING,HE (2) 265F	1
					NUT,SELF-LOCKING,HE (4) 265B	13
					NUT,SELF-LOCKING,HE (5) 265B	11
					NUT,SELF-LOCKING,HE (6) 265B	1
					NUT,STRIP (1) 265H	9
					PERISCOPE,ARMORED V (1) 265A	4
					PERISCOPE,ARMORED V (1) 265A	4
					PERISCOPE,ARMORED V (5) 265A	8
					PLATE,IDENTIFICATIO (1) 265B	8
					PLATE,SEAT BASE (1) 265L	5
					POUCH,STORAGE (1) 265A	5
					SCREW,CAP,HEXAGON H (1) 265J	9
					SCREW,CAP,HEXAGON H (1) 265D	19
					SCREW,CAP,HEXAGON H (10) 265D	1
					SCREW,CAP,HEXAGON H (10) 265E	10
					SCREW,CAP,HEXAGON H (12) 265A	1
					SCREW,CAP,HEXAGON H (2) 265D	8
					SCREW,CAP,HEXAGON H (2) 265D	13
					SCREW,CAP,HEXAGON H (2) 265F	4
					SCREW,CAP,HEXAGON H (2) 265C	2
					SCREW,CAP,HEXAGON H (2) 265H	2
					SCREW,CAP,HEXAGON H (4) 265B	17
					SCREW,CAP,HEXAGON H (4) 265B	18
					SCREW,CAP,HEXAGON H (6) 265B	7
					SCREW,CAP,HEXAGON H (6) 265D	4
					SCREW,CAP,HEXAGON H (6) 265B	3
					SCREW,CAP,HEXAGON H (8) 265E	2
					SCREW,CAP,SOCKET HE (2) 265D	18
					SCREW,MACHINE (2) 265K	1
					SCREW,MACHINE (2) 265J	16
					SEAL,CONTROL BOX (1) 265H	8
					SEAL,NONMETALLIC (1) 265H	6
					SEAT,VEHICULAR (1) 265L	2
					SEAT,VEHICULAR (1) 265L	1
					SLEEVE,BEARING (1) 265E	8
					STRAP ASSEMBLY,BATT (1) 265J	4
					STRAP,WEBBING (2) 265L	6
					TRIM,EDGE (1) 265K	6
					WASHER,FLAT (11) 265H	3
					WASHER,FLAT (12) 265B	2
					WASHER,FLAT (2) 265J	3
					WASHER,FLAT (2) 265K	3
					WASHER,FLAT (2) 265J	14
					WASHER,FLAT (22) 265D	3
					WASHER,FLAT (24) 265D	6
					WASHER,FLAT (26) 265E	3
					WASHER,FLAT (4) 265J	10
					WASHER,FLAT (4) 265C	7
					WASHER,FLAT (4) 265F	2
					WASHER,FLAT (5) 265B	12
					WASHER,FLAT (6) 265C	4
					WASHER,FLAT (6) 265B	5
					WASHER,FLAT (8) 265E	4
					WASHER,FLAT (8) 265B	14

(1) ITEM NO	(2) SMR CODE	(3) NSN	(4) CAGEC	(5) PART NUMBER	(6) DESCRIPTION AND USABLE ON CODES(UOC)	(7) QTY
					WASHER,LOCK (12) 265A	2
					WASHER,LOCK (14) 265D	2
					WASHER,LOCK (2) 265J	15
					WASHER,LOCK (2) 265C	6
					WASHER,LOCK (2) 265K	2
					WASHER,LOCK (2) 265F	5
					WASHER,LOCK (4) 265H	11
					WASHER,LOCK (4) 265J	11
					WASHER,LOCK (4) 265B	15
					WASHER,LOCK (6) 265C	3
					WASHER,LOCK (6) 265B	6
					WASHER,LOCK (6) 265D	5
					WASHER,LOCK (60) 265A	10
					WASHER,LOCK (9) 265E	11
					WASHER,WEDGE (6) 265G	3
					WIRING HARNESS (1) 265H	14
					WIRING HARNESS (1) 265H	7
					WIRING HARNESS (1) 265J	8
					WIRING HARNESS (1) 265K	7
					WIRING HARNESS,BRAN (1) 265H	16
					WIRING HARNESS,BRAN (1) 265H	13

END OF FIGURE

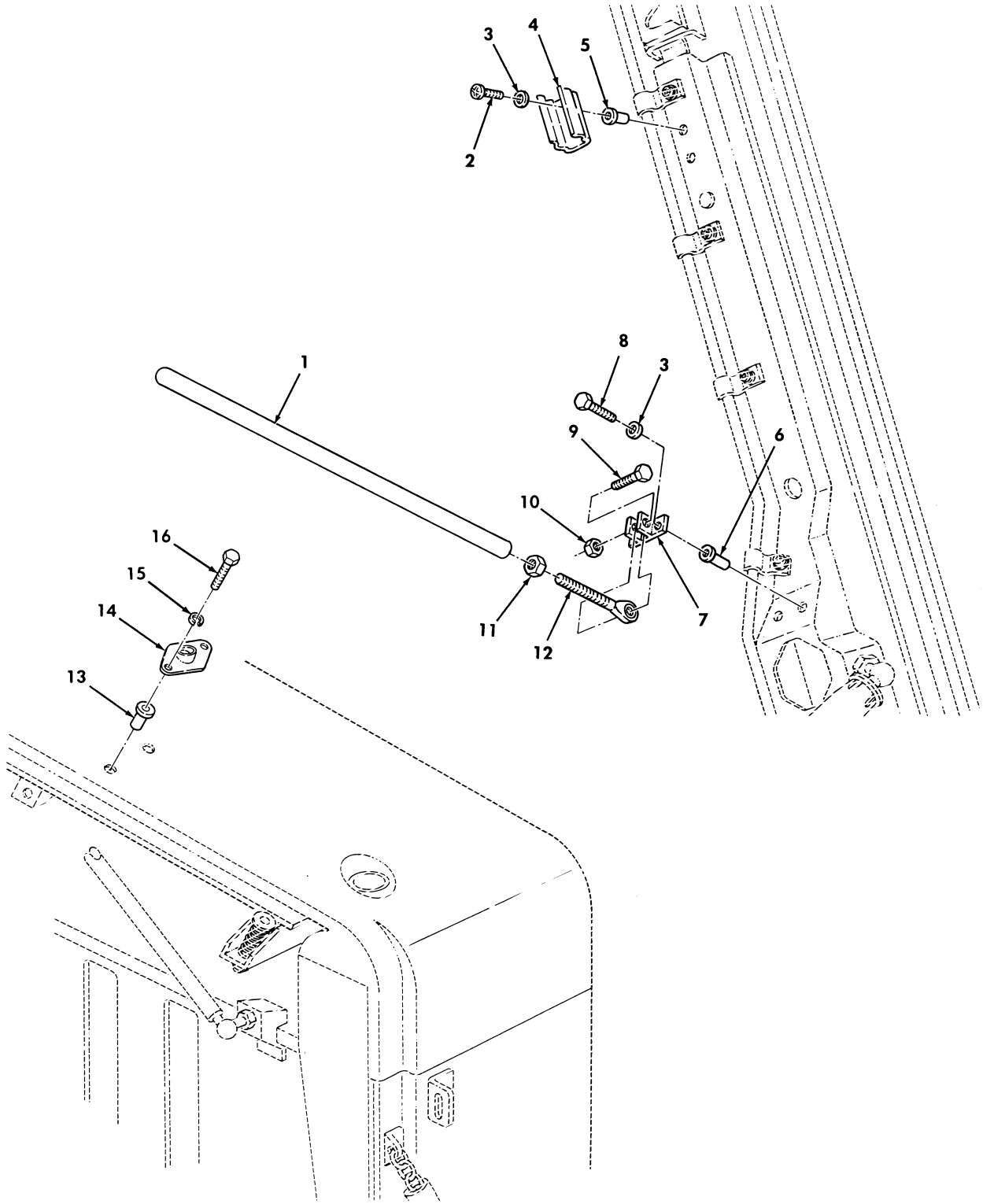

Figure 266. Kit, Rear Hatch Support.

(1) ITEM NO	(2) SMR CODE	(3) NSN	(4) CAGEC	(5) PART NUMBER	(6) DESCRIPTION AND USABLE ON CODES(UOC)	(7) QTY
					GROUP 3307 SPECIAL PURPOSE KITS	
					FIG. 266 KIT,REAR HATCH SUPPORT	
1	PAOZZ	5342014594992	19207	12460330	EXTENSION,CONTROL R PART OF KIT1 P/N 57K3243..... UOC:XBB	1
2	PAOZZ	5305014077713	24617	160052	SCREW,MACHINE PART OF KIT P/N 57K3243..... UOC:XBB	2
* 3	PAOZZ	5310000453296	80205	MS35338-43	WASHER,LOCK PART OF KIT P/N 57K3243. UOC:XBB	4
4	PAOZZ	5340014508693	81343	NAS1464-050-10T	CLIP,SPRING TENSION PART OF KIT P/N 57K3243..... UOC:XBB	1
5	PAOZZ	5310009901361	96906	MS27130-S25	NUT,PLAIN,BLIND RIV PART OF KIT P/N 57K3243..... UOC:XBB	4
6	PAOZZ	5310010465371	96906	MS27130-CR27	NUT,PLAIN,BLIND RIV PART OF KIT P/N 57K3243..... UOC:XBB	2
7	PAOZZ	5340014695774	19207	12460331	BRACKET,MULTIPLE AN PART OF KIT P/N 57K3243..... UOC:XBB	1
8	PAOZZ	5305000187838	24617	187838	SCREW,CAP,HEXAGON H PART OF KIT P/N 57K3243..... UOC:XBB	2
9	PAOZZ	5305000680509	80204	B1821BH025C125N	SCREW,CAP,HEXAGON H 1/4-20 X 1.25 PART OF KIT P/N 57K3243..... UOC:XBB	1
10	PAOZZ	5310014326727	24617	9419471	NUT,SELF-LOCKING,HE PART OF KIT P/N 57K3243..... UOC:XBB	1
11	PAOZZ	5310000120367	24617	120367	NUT,PLAIN,HEXAGON PART OF KIT P/N 57K3243..... UOC:XBB	1
* 12	PAOZZ	3120014577089	81343	SAEJ1120S4TYBCL 2A	BEARING,PLAIN,ROD SIZE 4 TYPE B3 PART OF KIT P/N 57K3243..... UOC:XBB	1
13	PAOZZ	5310000802411	96906	MS27130-S43	NUT,PLAIN,BLIND RIV PART OF KIT P/N 57K3243.....	2
13	PAOZZ	5310010805746	96906	MS27130-S44	NUT,PLAIN,BLIND RIV PART OF KIT P/N 57K3243.....	2
14	PAOZZ	5340014515903	19207	12460329	PLATE,MOUNTING PART OF KIT P/N 57K3243..... UOC:XBB	1
15	PAOZZ	5310000120214	24617	120214	WASHER,LOCK PART OF KIT P/N 57K3243. UOC:XBB	2
16	PAOZZ	5306002264825	80204	B1821BH031C075N	BOLT,MACHINE PART OF KIT P/N 57K3243 UOC:XBB	2
KIT	PAOZZ	2510014338551	19207	57K3243	PARTS KIT,CARGO HAT..... UOC:XBB	1
					BOLT,MACHINE (2) 266-16	

(1) ITEM NO	(2) SMR CODE	(3) NSN	(4) CAGEC	(5) PART NUMBER	(6) DESCRIPTION AND USABLE ON CODES(UOC)	(7) QTY
					BRACKET,MULTIPLE AN(1) 266-7	
					CLIP,SPRING TENSION(1) 266-4	
					EXTENSION,CONTROL R(1) 266-1	
					NUT,PLAIN,BLIND RIV(4) 266-5	
					NUT,PLAIN,BLIND RIV(2) 266-6	
					NUT,PLAIN,BLIND RIV(2) 266-13	
					NUT,PLAIN,BLIND RIV(2) 266-13	
					NUT,PLAIN,HEXAGON (1) 266-11	
					NUT,SELF-LOCKING,HE(1) 266-10	
					PLATE,MOUNTING (1) 266-14	
					BEARING,PLAIN,ROD E(1) 266-12	
					SCREW,CAP,HEXAGON H(2) 266-8	
					SCREW,CAP,HEXAGON H(1) 266-9	
					SCREW,MACHINE (2) 266-2	
					WASHER,LOCK (4) 266-3	
					WASHER,LOCK (2) 266-15	

END OF FIGURE

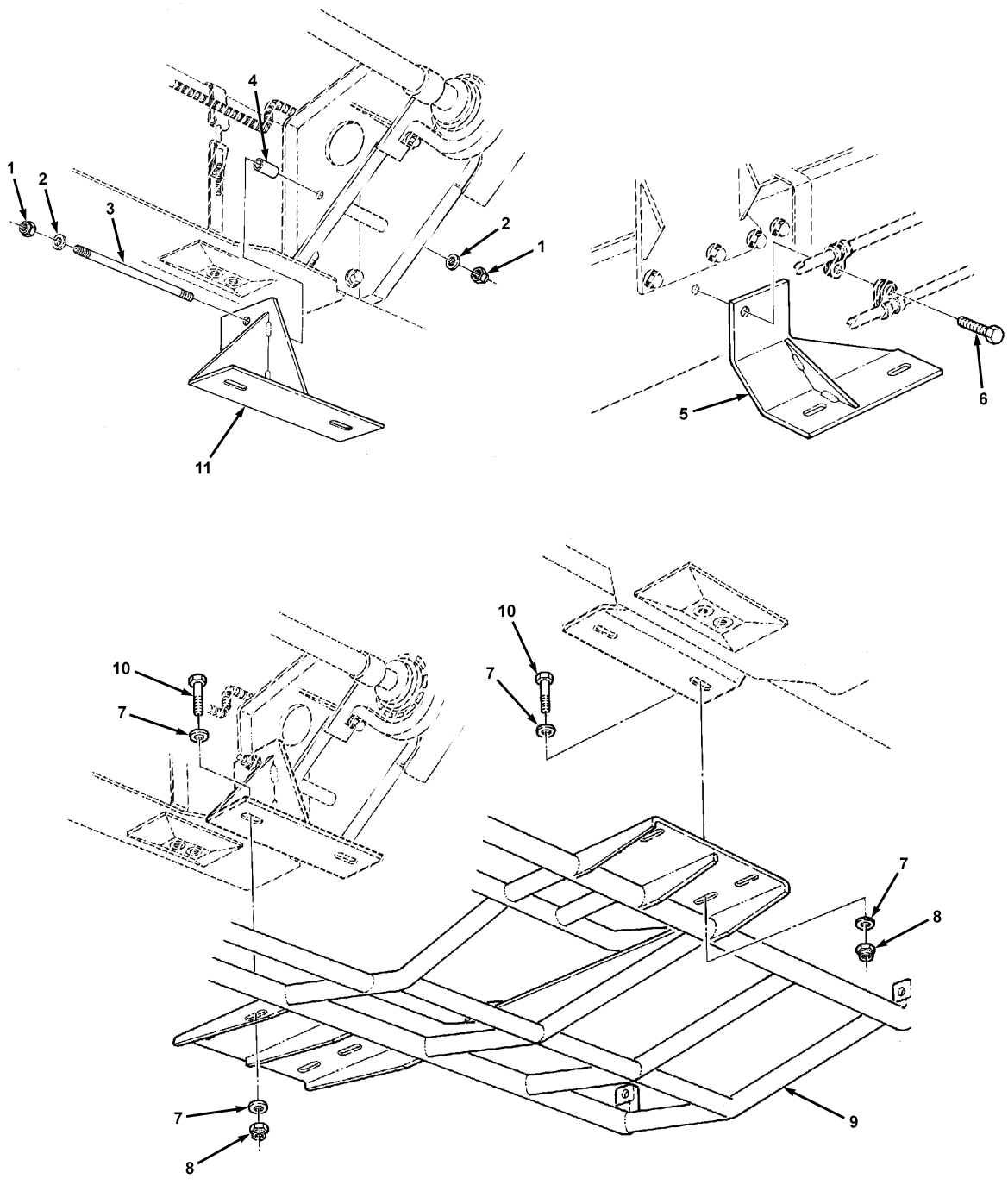

Figure 266A. Underbody Protection Kit With Winch, M1114 Only.

(1) ITEM NO	(2) SMR CODE	(3) NSN	(4) CAGEC	(5) PART NUMBER	(6) DESCRIPTION AND USABLE ON CODES(UOC)	(7) QTY
					GROUP 3307 SPECIAL PURPOSE KITS COMPONENTS	
					FIG. 266A UNDERBODY PROTECTION KIT WITH WINCH, M1114 ONLY	
* 1	PAOZZ	5310004883889	96906	MS51943-39	NUT,SELF-LOCKING PART OF KIT P/N 57K3493..... UOC:XBB	2
* 2	PAOZZ	5310011211703	24617	2436165	WASHER,FLAT PART OF KIT P/N 57K3493 UOC:XBB	2
* 3	PAOZZ		19207	12460499	ROD PART OF KIT P/N 57K3493..... UOC:XBB	1
* 4	PAOZZ		19207	12338186-70	SPACER PART OF KIT P/N 57K3493..... UOC:XBB	1
* 5	PAOZZ		19207	12460501	BRACKET R.H. PART OF KIT P/N 57K3493..... UOC:XBB	1
* 6	PAOZZ		24617	172487	SCREW PART OF KIT P/N 57K3493..... UOC:XBB	1
* 7	PAOZZ	5310011191024	24617	2436162	WASHER,FLAT PART OF KIT P/N 57K3493..... UOC:XBB	8
* 8	PAOZZ	5310008140673	96906	MS51943-33	NUT,SELF-LOCKING PART OF KIT P/N 57K3493..... UOC:XBB	
* 9	PAOZZ	2540014659030	34623	12447143	SHIELD,INTERMEDIATE PART OF KIT P/N 57K3493..... UOC:XBB	1
* 10	PAOZZ	5306011300457	24617	9430677	BOLT,MACHINE PART OF KIT P/N 57K3493..... UOC:XBB	4
* 11	PAOZZ		19207	12460500	BRACKET L.H. PART OF KIT P/N 57K3493..... UOC:XBB	1

END OF FIGURE

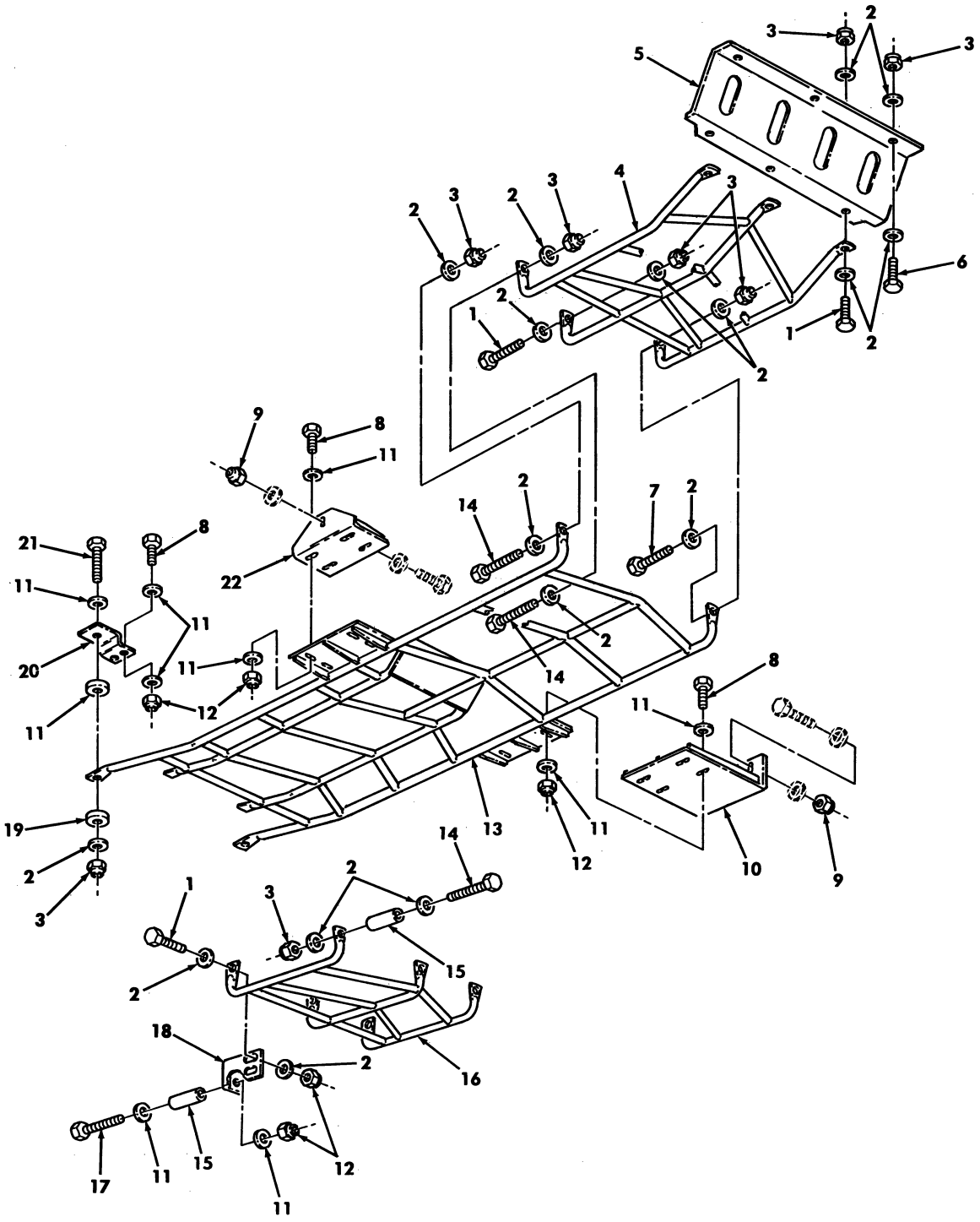

Figure 266B. Underbody Protection Kit With and Without Winch.

(1) ITEM NO	(2) SMR CODE	(3) NSN	(4) CAGEC	(5) PART NUMBER	(6) DESCRIPTION AND USABLE ON CODES(UOC)	(7) QTY
					GROUP 3307 SPECIAL PURPOSE KITS	
					FIG. 266B UNDERBODY PROTECTION KIT WITH AND WITHOUT WINCH	
* 1	PAOZZ	5305005432419	80204	B1821BH038C113N	SCREW,CAP HEXAGON H PART OF KIT P/N 57K3493 PART OF KIT P/N 57K3494.	7
* 2	PAOZZ	5310014124013	24617	2436163	WASHER,FLAT PART OF KIT P/N 57K3493 PART OF KIT P/N 57K3494.....	40
* 3	PAOZZ	5310009359021	96906	MS51943-35	NUT,SELF-LOCKING PART OF KIT P/N 57K3493 PART OF KIT P/N 57K3494.....	20
* 4	PAOZZ	2540014663849	19207	12460415	GUARD,BRUCH VEHICUL PART OF KIT P/N 57K3493..... UOC:XBB	1
* 5	PAOZZ		19207	12447163-1	PLATE,SKID PART OF KIT P/N 57K3493. UOC:XBB	1
* 5	PAOZZ	9515014786343	19207	12447164	PLATE,SKID PART OF KIT P/N 57K3494. UOC:XAA	1
* 6	PAOZZ	5305000680510	80204	B1821BH038C100N	SCREW,CAP HEXAGON H PART OF KIT P/N 57K3493 PART OF KIT P/N 57K3494.....	5
* 7	PAOZZ	5305011983440	7X677	9430724	SCREW,CAP HEXAGON H PART OF KIT P/N 57K3493 PART OF KIT P/N 57K3494.....	1
* 8	PAOZZ	5306011300457	24617	9430677	BOLT,MACHINE PART OF KIT P/N 57K3493..... UOC:XBB	8
* 8	PAOZZ	5306011300457	24617	9430677	BOLT,MACHINE PART OF KIT P/N 57K3494..... UOC:XAA	12
* 9	PAOZZ	5310004883889	96906	MS51943-39	NUT,SELF-LOCKING PART OF KIT P/N 57K3493..... UOC:XBB	6
* 9	PAOZZ	5310000043889	96906	MS51943-39	NUT,SELF-LOCKING PART OF KIT P/N 57K3494..... UOC:XAA	4
* 10	PAOZZ	5340014331982	19207	12447146	BRACKET,MOUNTING L.H. PART OF KIT 57K3494..... UOC:XAA	1
* 11	PAOZZ	5310011191024	24617	2436162	WASHER,FLAT PART OF KIT P/N 57K3494 UOC:XAA	36
* 11	PAOZZ	5310011191024	24617	2436162	WASHER,FLAT PART OF KIT P/N 57K3493 UOC:XBB	28
* 12	PAOZZ	5310008140673	96906	MS51943-33	NUT,SELF-LOCKING PART OF KIT P/N 57K3494..... UOC:XAA	18
* 12	PAOZZ	5310008140673	96906	MS51943-33	NUT,SELF-LOCKING PART OF KIT P/N 57K3493..... UOC:XBB	4
* 13	PAOZZ	2540014659030	19207	12467143	SHIELD ASSEMBLY DRI PART OF KIT P/N 57K3493 PART OF KIT P/N 57K3494.....	1
* 14	PAOZZ	5305011979417	7X677	9428795	SCREW,CAP HEXAGON H PART OF KIT P/N 57K3493 PART OF KIT P/N 57K3494.....	5

(1) ITEM NO	(2) SMR CODE	(3) NSN	(4) CAGEC	(5) PART NUMBER	(6) DESCRIPTION AND USABLE ON CODES(UOC)	(7) QTY
* 15	PAOZZ	5365014660850	19207	12338186-69	SPACER,SLEEVE PART OF KIT P/N 57K3493 PART OF KIT P/N 57K3494.....	5
* 16	PAOZZ	2540014663770	19207	12447144	GUARD,BRUSH VEHICUL PART OF KIT P/N 57K3493 PART OF KIT P/N 57K3494.....	1
* 17	PAOZZ	5305014599564	24617	453039	SCREW,CAP HEXAGON H PART OF KIT P/N 57K3493 PART OF KIT P/N 57K3494.....	6
* 18	PAOZZ	5340011462524	19207	12467145	BRACKET,ANGLE PART OF KIT P/N 57K3493 PART OF KIT P/N 57K3494.....	1
* 19	PAOZZ	5310014659727	19207	12447149	WASHER,FLAT PART OF KIT P/N 57K3493 PART OF KIT P/N 57K3494.....	4
* 20	PAOZZ	5340014664086	19207	12447148	BRACKET,MOUNTING AN PART OF KIT P/N 57K3493 PART OF KIT 57K3494.....	2
* 21	PAOZZ	5305009640691	80204	B1821BH038C150N	SCREW,CAP HEXAGON H PART OF KIT P/N 57K6493 PART OF KIT P/N 57K3494.....	2
* 22	PAOZZ		19207	12447147	BRACKET ASSEMBLY R.H. PART OF KIT P/N 57K3494..... UOC:XAA	1

END OF FIGURE

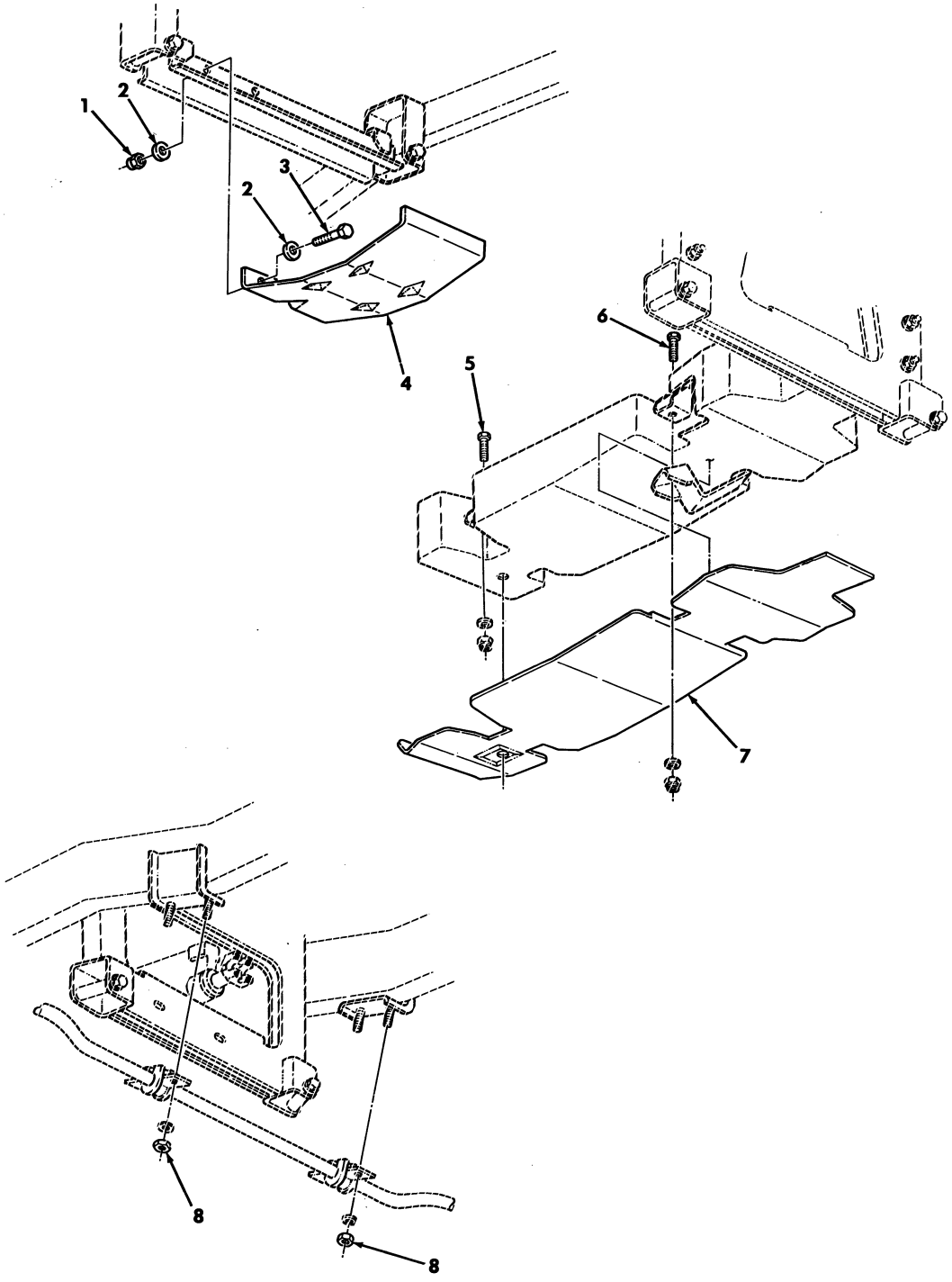

Figure 266C. Underbody Protection Kit, Transfer Case, Fuel Tank Shields, and Sway Bar Link Nuts.

(1) ITEM NO	(2) SMR CODE	(3) NSN	(4) CAGEC	(5) PART NUMBER	(6) DESCRIPTION AND USABLE ON CODES(UOC)	(7) QTY
					GROUP 3307 SPECIAL PURPOSE KITS	
					FIG. 266C UNDERBODY PROTECTION KIT, TRANSFER CASE,FUEL TANK SHIELDS,AND SWAY BAR LINK NUTS	
* 1	PAOZZ	5310009359021	96906	MS51943-35	NUT,SELF-LOCKING PART OF KIT P/N 57K3493 PART OF KIT P/N 57K3494.....	20
* 2	PAOZZ	5310014124013	24617	2436163	WASHER,FLAT PART OF KIT P/N 57K3943 PART OF KIT P/N 57K3494.....	40
* 3	PAOZZ	5305000680510	80204	B1821BH038C100N	SCREW,CAP HEXAGON H PART OF KIT P/N 57K3493 PART OF KIT P/N 57K3494.....	5
* 4	PAOZZ	2590014663824	19207	12447151	SHIELD,TRANSFER CAS PART OF KIT P/N 57K3943 PART OF KIT P/N 57K3494.....	1
* 5	PAOZZ	5305014125995	19207	12460145-2	SCREW,CAP HEXAGON H PART OF KIT P/N 57K3493 PART OF KIT P/N 57K3494.....	1
* 6	PAOZZ	5306014112338	19207	12460145-1	BOLT,MACHINE PART OF KIT P/N 57K 3493 PART OF KIT P/N 57K3494.....	1
* 7	PAOZZ	2590014663866	19207	12447150	SHIELD,FUEL TANK PART OF KIT P/N 57K3493 PART OF KIT 57K3494.....	1
* 8	PAOZZ	5310011504003	24617	9422299	NUT,SELF-LOCKING PART OF KIT P/N 57K4393 PART OF KIT P/N 57K4394.....	4
*KIT	PAOZZ		19207	57K3493	KIT,UNDERBODY PROTECTION WITH REAR WINCH (M1114).....	1
					UOC:XBB	
					BOLT,MACHINE (8) 266B-8	
					BOLT,MACHINE (1) 266C-6	
					BOLT (4) 266A-10	
					BRACKET,ANGLE (1) 266B-18	
					BRACKET,L.H. (1) 266A-11	
					BRACKET,MULTIPLE AN(1) 266B-20	
					BRACKET,R.H. (1) 266A-5	
					GUARD,BRUSH (1) 266B-16	
					GUARD (1) 266B-4	
					NUT,SELF-LOCKING (2) 266A-1	
					NUT,SELF-LOCKING (4) 266A-8	
					NUT,SELF-LOCKING (20) 266B-3	
					NUT,SELF-LOCKING (6) 266B-9	
					NUT,SELF-LOCKING (4) 266B-12	
					NUT,SELF-LOCKING (20) 266C-1	
					NUT,SELF-LOCKING (4) 266C-8	
					PLATE,SKID (1) 266B-5	
					ROD (1) 266A-3	
					SCREW (1) 266A-6	
					SCREW,CAP HEXAGON H(7) 266B-1	
					SCREW,CAP HEXAGON H(5) 266B-6	
					SCREW,CAP HEXAGON H(1) 266B-7	
					SCREW,CAP HEXAGON H(5) 266B-14	
					SCREW,CAP HEXAGON H(6) 266B-17	
					SCREW,CAP HEXAGON H(2) 266B-21	
					SCREW,CAP HEXAGON H(5) 266C-3	
					SCREW,CAP HEXAGON H(1) 266C-5	

(1) ITEM NO	(2) SMR CODE	(3) NSN	(4) CAGEC	(5) PART NUMBER	(6) DESCRIPTION AND USABLE ON CODES(UOC)	(7) QTY
					SHIELD (1) 266C-4	
					SHIELD (1) 266A-9	
					SHIELD ASSEMBLY (1) 266B-13	
					SHIELD,FUEL TANK (1) 266C-7	
					SPACER (1) 266A-4	
					SPACER,SLEEVE (5) 266B-15	
					WASHER,FLAT (2) 266A-2	
					WASHER,FLAT (8) 266A-7	
					WASHER,FLAT (40) 266B-2	
					WASHER,FLAT (28) 266B-11	
					WASHER,FLAT (4) 266B-19	
					WASHER,FLAT (40) 266C-2	
*KIT	PAOZZ		19207	57K3494	KIT,UNDERBODY PROTECTION WITHOUT HYDRAULIC WINCH (M1113).....	1
					UOC:XAA	
					BOLT,MACHINE (12) 266B-8	
					BOLT,MACHINE (1) 266C-6	
					BRACKET,ANGLE (1) 266B-18	
					BRACKET ASSEMBLY (1) 266B-22	
					BRACKET,MOUNTING (1) 266B-10	
					BRACKET,MULTIPLE AN(1) 266B-20	
					GUARD,BRUSH (1) 266B-16	
					NUT,SELF-LOCKING (20) 266B-3	
					NUT,SELF-LOCKING (4) 266B-9	
					NUT,SELF-LOCKING (18) 266B-12	
					NUT,SELF-LOCKING (20) 266C-1	
					NUT,SELF-LOCKING (4) 266C-8	
					PLATE,SKID (1) 266B-5	
					SCREW,CAP HEXAGON H(7) 266B-1	
					SCREW,CAP HEXAGON H(5) 266B-6	
					SCREW,CAP HEXAGON H(1) 266B-7	
					SCREW,CAP HEXAGON H(5) 266B-14	
					SCREW,CAP HEXAGON H(6) 266B-17	
					SCREW,CAP HEXAGON H(2) 266B-21	
					SCREW,CAP HEXAGON H(5) 266C-3	
					SCREW,CAP HEXAGON H(1) 266C-5	
					SHIELD (1) 266C-4	
					SHIELD ASSEMBLY (1) 266B-13	
					SHIELD,TRANSFER CAS(1) 266C-7	
					SPACER (5) 266B-15	
					WASHER,FLAT (40) 266B-2	
					WASHER,FLAT (36) 266B-11	
					WASHER,FLAT (4) 266B-19	
					WASHER,FLAT (40) 266C-2	

END OF FIGURE

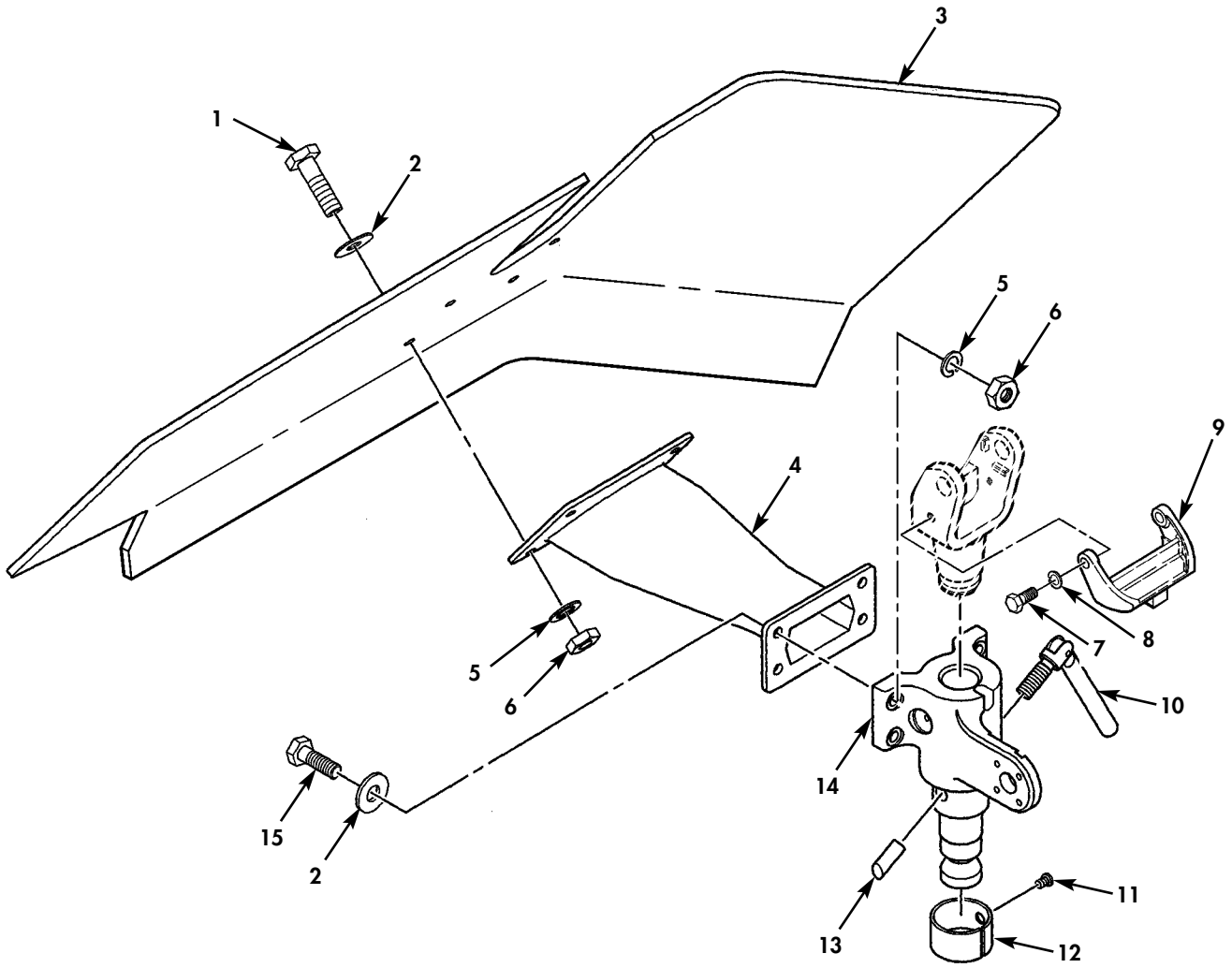

Figure 266D. Gunner's Shield and Related Parts.

(1) ITEM NO	(2) SMR CODE	(3) NSN	(4) CAGEC	(5) PART NUMBER	(6) DESCRIPTION AND USABLE ON CODES(UOC)	(7) QTY
					GROUP 3307 SPECIAL PURPOSE KITS	
					FIG. 266D GUNNER'S SHIELD AND RELATED PARTS	
* 1	PAOZZ	5306014339197	6W728	4397000-062	BOLT,MACHINE PART OF KIT P/N 57K4470..... UOC:XBB	4
* 2	PAOZZ	5310014421109	24617	9421888	WASHER,FLAT PART OF KIT P/N 57K4470 UOC:XBB	8
* 3	PAOZZ	2540015003446	19207	12484846	ARMOR SUPPLEMENTAL PART OF KIT P/N 57K4470..... UOC:XBB	1
* 4	PAOZZ	1005015003744	19207	12484852	PEDESTAL,GUN,MOUNT PART OF KIT P/N 57K4470..... UOC:XBB	1
* 5	PAOZZ	5310014177273	6W728	4397004-008	WASHER,LOCK PART OF KIT P/N 57K4470 UOC:XBB	8
* 6	PAOZZ	5310014398177	6W728	4397064-005	NUT,SELF-LOCKING,HE PART OF KIT P/N 57K4470..... UOC:XBB	8
* 7	PAOZZ	5306014307399	6W728	4397000-006	BOLT,MACHINE PART OF KIT P/N 57K4470..... UOC:XBB	2
* 8	PAOZZ	5310014330941	6W728	4397004-006	WASHER,LOCK PART OF KIT P/N 57K4470 UOC:XBB	2
* 9	PAOZZ	5340015005572	19207	12484848	LEVER,QUICK-RELEA PART OF KIT P/N 57K4470..... UOC:XBB	1
* 10	PAOZZ	1010014472983	04099	12012065	HANDLE,PINTLE LOCK PART OF KIT P/N 57K4470..... UOC:XBB	1
* 11	PAOZZ	5305005140237	19205	5140237	SCREW,MACHINE PART OF KIT P/N 57K4470..... UOC:XBB	1
* 12	PAOZZ	5325014472281	19200	12012071	RING,RETAINING PART OF KIT P/N 57K4470..... UOC:XBB	1
* 13	PAOZZ	5315014472276	04099	12012067	PIN,STRAIGHT,HEADLE PART OF KIT P/N 57K4470..... UOC:XBB	1
* 14	PAOZZ	2540015000309	19207	12484847	LATCH,PINTLE HOOK PART OF KIT P/N 57K4470..... UOC:XBB	1
* 15	PAOZZ	5305014366377	6W728	4397000-064	SCREW,CAP,HEXAGON PART OF KIT P/N 57K4470..... UOC:XBB	4
*KIT	PAOZZ	2510014984996	19207	57K4470	KIT,GUNNER SHIELD..... UOC:XBB	1
					ARMOR,SUPPLEMENTAL (1) 266D-3	
					BOLT,MACHINE (4) 266D-1	
					HANDLE,PINTLE LOCK (1) 266D-10	
					LOCK,PINTLE (1) 266D-9	

(1) ITEM NO	(2) SMR CODE	(3) NSN	(4) CAGEC	(5) PART NUMBER	(6) DESCRIPTION AND USABLE ON CODES(UOC)	(7) QTY
					NUT,SELF-LOCKING,HE(8) 266D-6	
					PEDESTAL,GUN MOUNT (1) 266D-4	
					PIN,STRAIGHT,HEADLE(1) 266D-13	
					PINTLE,LOCK (1) 266D-14	
					RING,RETAINING (1) 266D-12	
					SCREW,CAP,HEXAGON H(2) 266D-7	
					SCREW,MACHINE (1) 266D-11	
					WASHER,FLAT (4) 266D-2	
					WASHER,FLAT (8) 266D-15	
					WASHER,LOCK (8) 266D-5	
					WASHER,LOCK (2) 266D-8	

END OF FIGURE

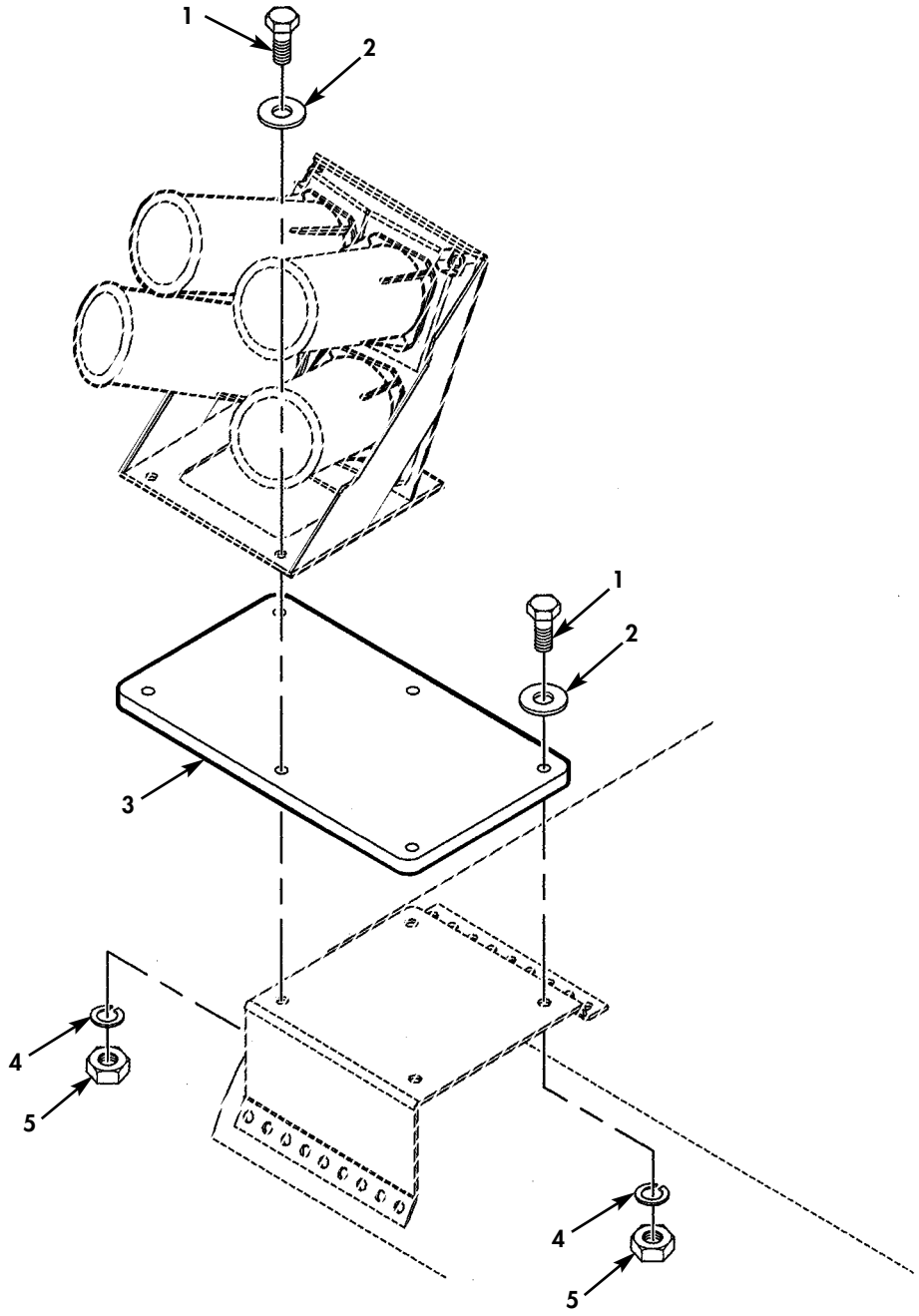

Figure 266E. LVOSS Unit and Related Parts.

(1) ITEM NO	(2) SMR CODE	(3) NSN	(4) CAGEC	(5) PART NUMBER	(6) DESCRIPTION AND USABLE ON CODES(UOC)	(7) QTY
					GROUP 3307 SPECIAL PURPOSE KITS	
					FIG. 266E LVOSS UNIT AND RELATED PARTS	
* 1	PAOZZ	5306014339183	6W728	4397000-036	BOLT,MACHINE 5/16-18 X 1.25..... UOC:XBB	12
* 2	PAOZZ	5310014229287	6W728	4397005-012	WASHER,FLAT 11/32..... UOC:XBB	12
* 3	PAOZZ	5340015005580	19207	12484854	PLATE,MOUNTING..... UOC:XBB	2
* 4	PAOZZ	5310014179942	6W728	4397004-007	WASHER,LOCK 5/16..... UOC:XBB	12
* 5	PAOZZ	5310014398172	6W728	4397064-003	NUT,SELF-LOCKING,HE 5/16-18..... UOC:XBB	12

END OF FIGURE

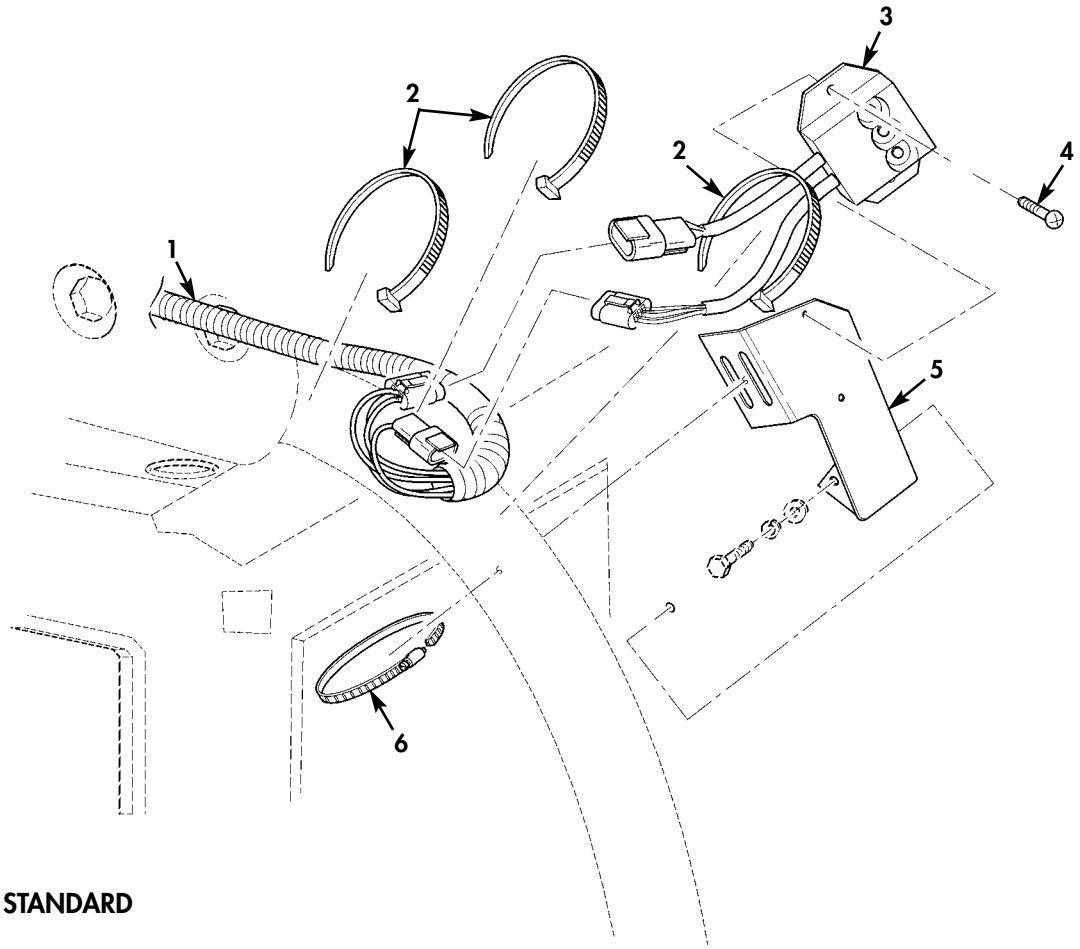

Figure 266F. AFES Crew Compartment Sensors, Brackets, and Mounting Hardware (M1114) (Sheet 1 of 2).

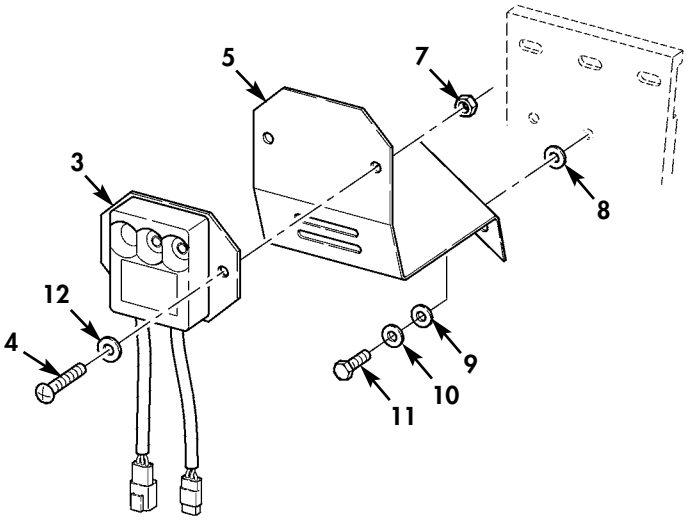

RIGHT HAND FRAG 5

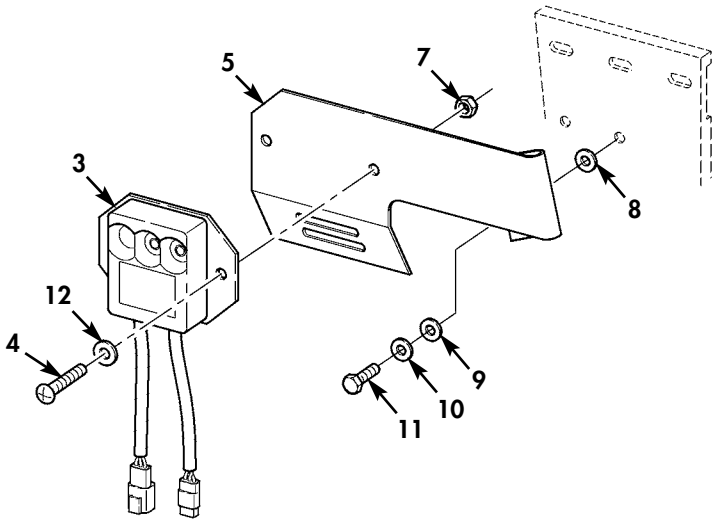

LEFT HAND FRAG 5

Figure 266F. AFES Crew Compartment Sensors, Brackets, and Mounting Hardware (M1114) (Sheet 2 of 2).

(1) ITEM NO	(2) SMR CODE	(3) NSN	(4) CAGEC	(5) PART NUMBER	(6) DESCRIPTION AND USABLE ON CODES(UOC)	(7) QTY
					GROUP 3307 SPECIAL PURPOSE KITS	
					FIG. 266F AFES CREW COMPARTMENT SENSORS,BRACKETS,AND MOUNTING HARDWARE (M1114)	
* 1	PAOZZ	6150015421786	05BU0	421910	CABLE ASSEMBLY,SPEC PART OF KIT P/N 421783..... UOC:XBB	1
* 2	PAOZZ	5975010345871	96906	MS3367-7-0	STRAP,TIEDOWN,ELECT PART OF KIT P/N 421783..... UOC:XBB	3
* 3	PAOZZ	6350015429955	05BU0	421696	CONTROL,ALARM PART OF KIT P/N 421783 UOC:XBB	2
* 4	PAOZZ	5305012135024	86403	9414722	SCREW #10-24 X 3/4 PART OF KIT P/N 421783..... UOC:XBB	4
* 5	PAOZZ		6W728	6435678-01M1	BRACKET,MOUNTING L.H.,USE WITH FRAG 5 PART OF KIT P/N 421783..... UOC:XBB	1
* 5	PAOZZ		6W728	6435677-01M1	BRACKET,MOUNTING R.H.,USE WITH FRAG 5 PART OF KIT P/N 421783..... UOC:XBB	1
* 5	PAOZZ	5340015421128	05BU0	421761	BRACKET,DOUBLE ANGL CREW,R.H. PART OF KIT P/N 421783..... UOC:XBB	1
* 5	PAOZZ	5340015420454	05BU0	421760	BRACKET,MULTIPLE AN CREW,L.H. PART OF KIT P/N 421783..... UOC:XBB	1
* 6	PAOZZ	4730009098627	76599	36HSS	CLAMP,HOSE USE WITH OUT FRAG 5 PART OF KIT P/N 421783..... UOC:XBB	2
* 7	PAOZZ	5310015585168	96906	M45913/4-5CG8C	NUT,SELF-LOCKING 5/16-18,USE WITH FRAG 5 PART OF KIT P/N 421783..... UOC:XBB	4
* 8	PFOZZ		6W728	6430528-05M1	WASHER,LOCK,SERRATE M8,USE WITH FRAG 5 PART OF KIT P/N 421783..... UOC:XBB	2
* 9	PAOZZ	5310014363741	6W728	4397005-013	WASHER,FLAT 5/16,USE WITH FRAG 5 PART OF KIT P/N 421783..... UOC:XBB	4
* 10	PAOZZ	5310014179942	6W728	4397004-007	WASHER,LOCK 5/16,USE WITH FRAG 5 PART OF KIT P/N 421783..... UOC:XBB	4
* 11	PAOZZ	5305014206637	6W728	4397000-034	SCREW,CAP,HEXAGON H 5/16-18 X 1.00,USE WITH FRAG 5 PART OF KIT P/N 421783..... UOC:XBB	4
* 12	PAOZZ	5310015336150	39428	95795A012	WASHER,LOCK #10,USE WITH FRAG 5 PART OF KIT P/N 421783..... UOC:XBB	4

END OF FIGURE

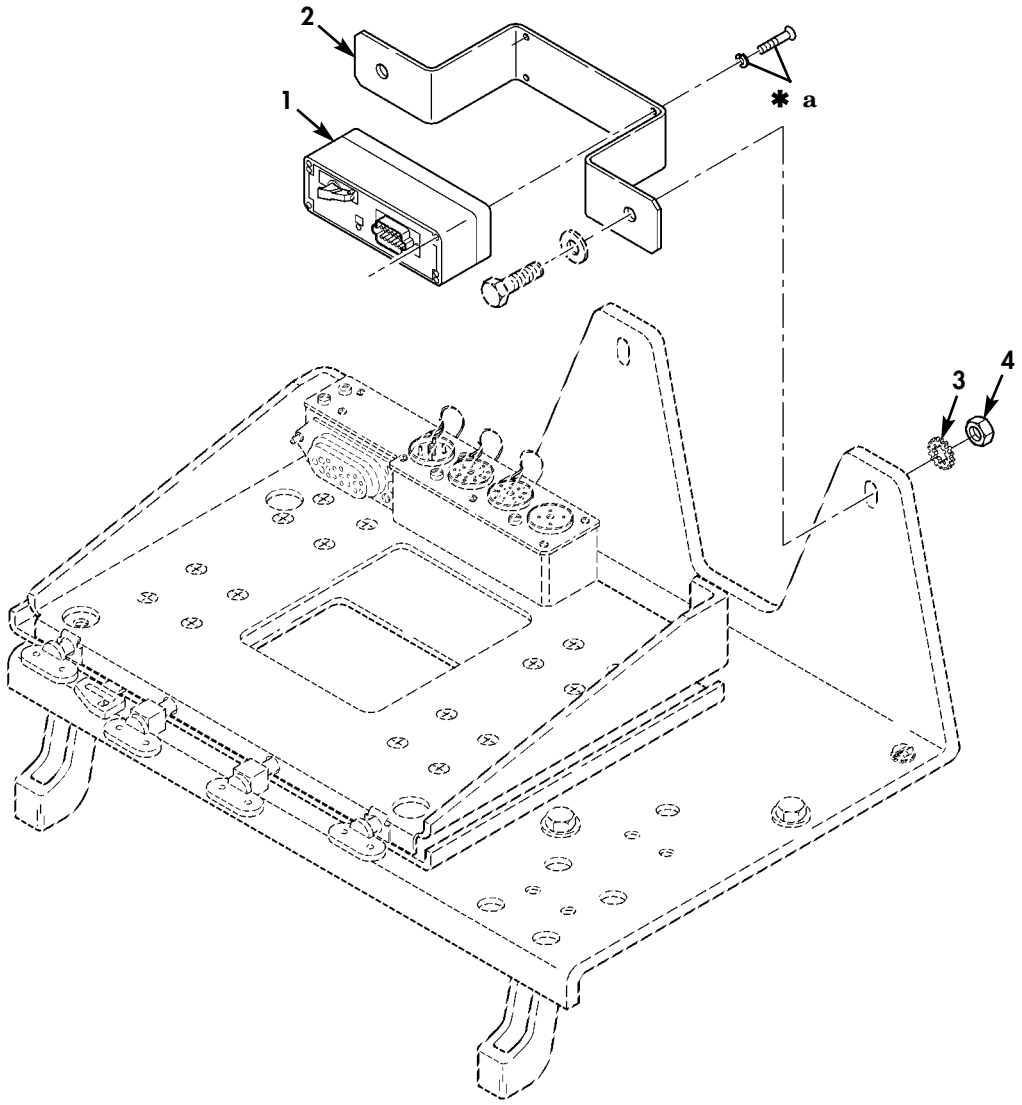

✱ **a** PART OF ITEM 1

Figure 266G. AFES Master Controller Assembly (M1114).

(1) ITEM NO	(2) SMR CODE	(3) NSN	(4) CAGEC	(5) PART NUMBER	(6) DESCRIPTION AND USABLE ON CODES(UOC)	(7) QTY
					GROUP 3307 SPECIAL PURPOSE KITS	
					FIG. 266G AFES MASTER CONTROLLER ASSEMBLY (M1114)	
* 1	PAOZZ	5963015433619	05BU0	421884	ELECTRONIC MODULE PART OF KIT P/N 421783..... UOC:XBB	1
* 2	PFOZZ	5340015424809	05BU0	421759	BRACKET,MULTIPLE AN PART OF KIT P/N 421783..... UOC:XBB	1
* 3	PAOZZ	5310008892528	96906	MS45904-68	WASHER,LOCK M10 PART OF KIT P/N 421783..... UOC:XBB	2
* 4	PAOZZ	5310004473196	19207	7712510	NUT,SELF-LOCKING,CL 1/4-20 PART OF KIT P/N 421783..... UOC:XBB	2

END OF FIGURE

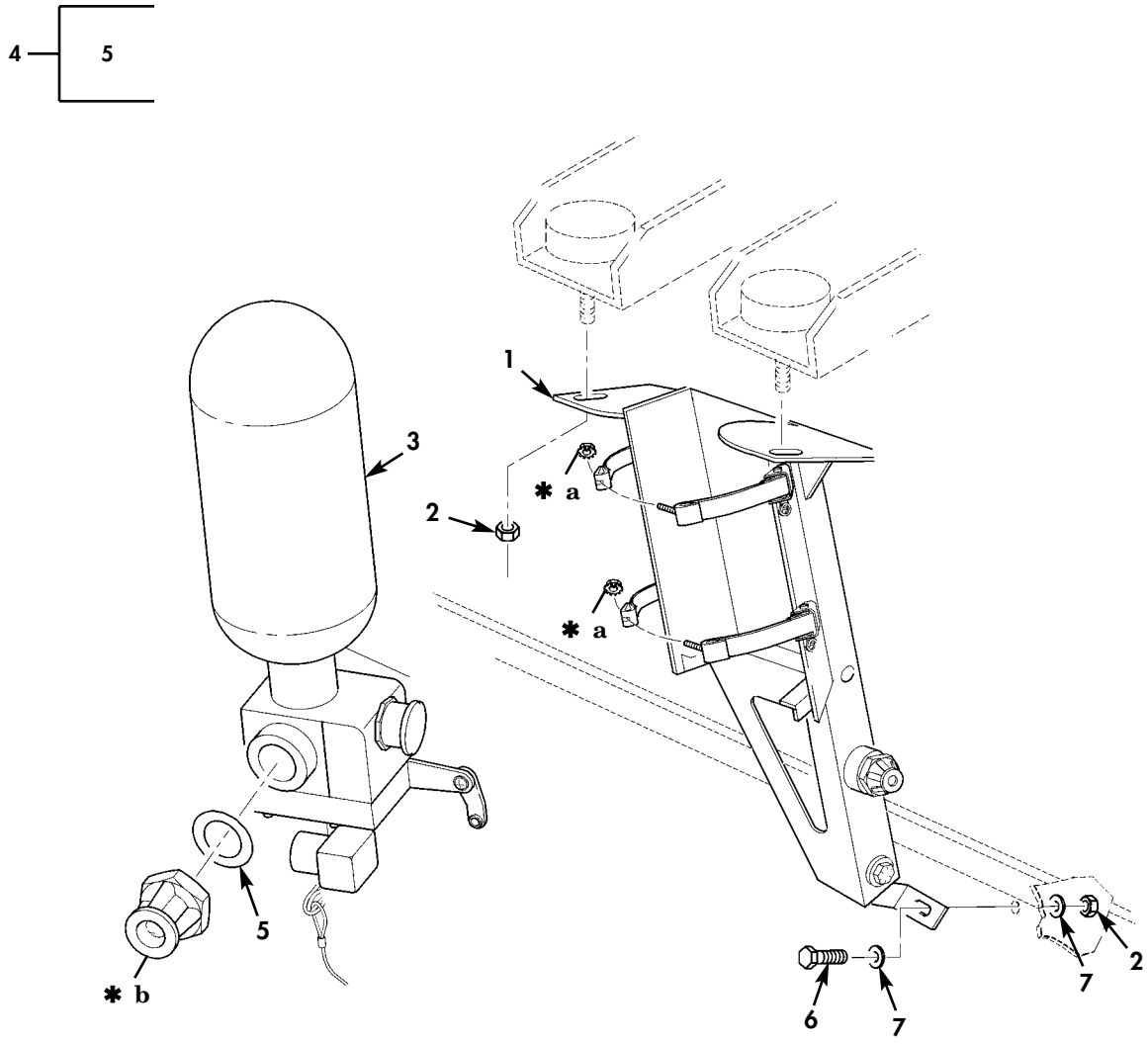

✱ **a** PART OF ITEM 1
✱ **b** PART OF ITEM 4

Figure 266H. AFES Crew Compartment Fire Extinguisher, Mounting Bracket, and Related Hardware (M1114).

(1) ITEM NO	(2) SMR CODE	(3) NSN	(4) CAGEC	(5) PART NUMBER	(6) DESCRIPTION AND USABLE ON CODES(UOC)	(7) QTY
					GROUP 3307 SPECIAL PURPOSE KITS	
					FIG. 266H AFES CREW COMPARTMENT FIRE EXTINGUISHER,MOUNTING BRACKET, AND RELATED HARDWARE (M1114)	
* 1	PFOZZ	4210015428163	05BU0	421749	BRACKET,FIRE EXTING PART OF KIT P/N 421783..... UOC:XBB	1
* 2	PAOZZ	5310014904433	81349	M45913/4-6CG8C	NUT,SELF-LOCKING,HE 3/8-16 PART OF KIT P/N 421783..... UOC:XBB	3
* 3	PAOZZ	4210015256692	05BU0	421157	EXTINGUISHER,FIRE PART OF KIT P/N 421783..... UOC:XBB	1
* 4	PAOZZ	4210014428750	05BU0	55845-4	NOZZLE,FIRE HOSE PART OF KIT P/N 421783..... UOC:XBB	1
* 5	PAOZZ	5331008195111	81343	MS28778-24	.O-RING PART OF KIT P/N 421783..... UOC:XBB	1
* 6	PAOZZ	5305007813927	80204	B1821BH038C350N	SCREW,CAP,HEXAGON H 3/8-16 X 3.50 PART OF KIT P/N 421783..... UOC:XBB	1
* 7	PAOZZ	5310000806004	96906	MS27183-14	WASHER,FLAT 3/8 PART OF KIT P/N 421783..... UOC:XBB	2

END OF FIGURE

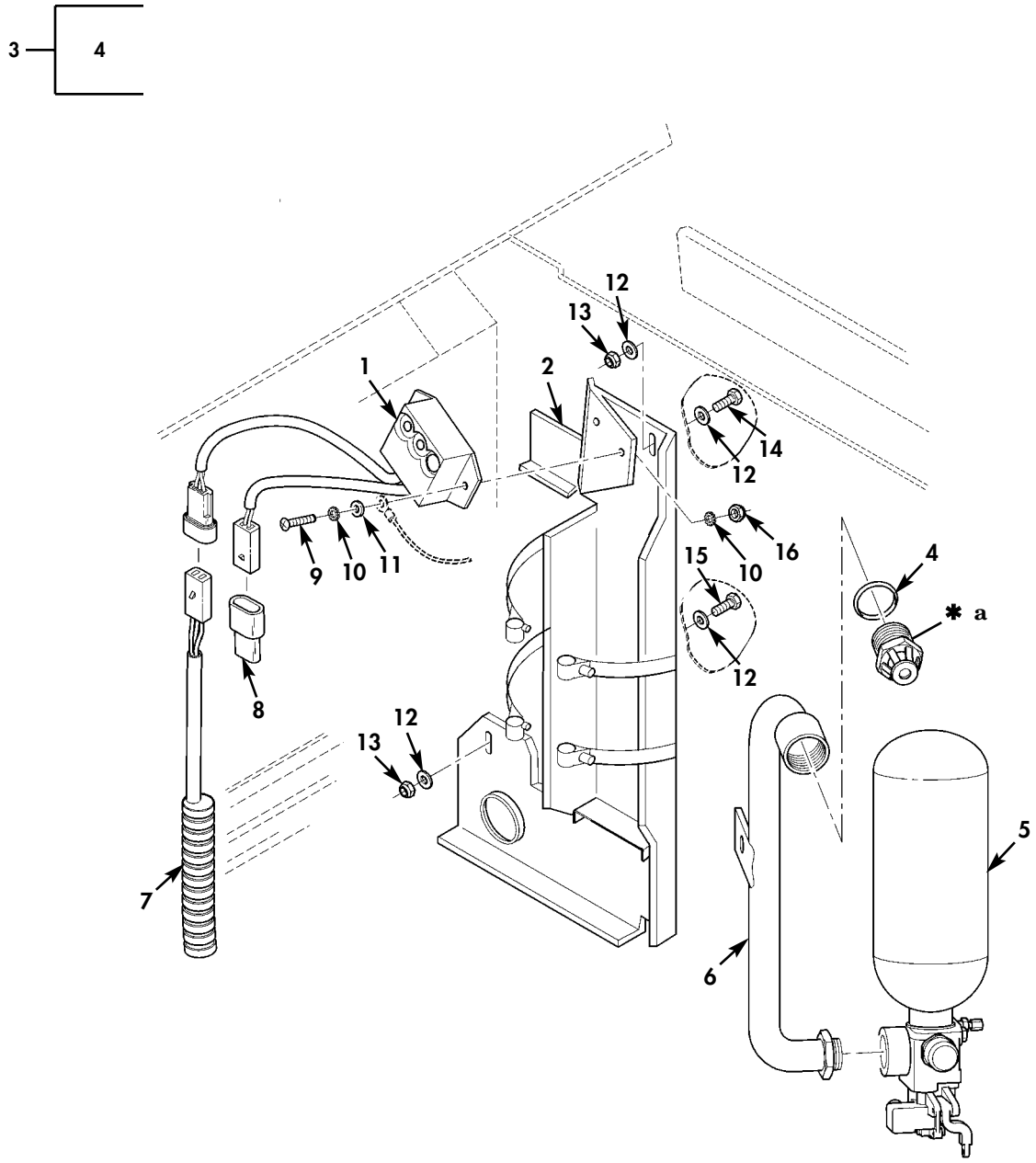

✱ **a** PART OF ITEM 3

Figure 266I. AFES Cargo Compartment Fire Extinguisher, Sensor, Mounting Bracket, and Related Hardware (M1114).

(1) ITEM NO	(2) SMR CODE	(3) NSN	(4) CAGEC	(5) PART NUMBER	(6) DESCRIPTION AND USABLE ON CODES(UOC)	(7) QTY
					GROUP 3307 SPECIAL PURPOSE KITS	
					FIG. 266I AFES CARGO COMPARTMENT FIRE EXTINGUISHER,SENSOR,MOUNTING BRACKET,AND RELATED HARDWARE (M1114)	
* 1	PAOZZ	6350015429955	05BU0	421696	CONTROL,ALARM PART OF KIT P/N 421783 UOC:XBB	1
* 2	PFOZZ	4210015428167	05BU0	421750	BRACKET,FIRE EXTING CARGO COMPARTMENT PART OF KIT P/N 421783.. UOC:XBB	1
* 3	PAOZZ	4210014428750	05BU0	55845-4	NOZZLE,FIRE HOSE PART OF KIT P/N 421783..... UOC:XBB	1
* 4	PAOZZ	5331008195111	81343	MS28778-24	.O-RING PART OF KIT P/N 421783..... UOC:XBB	1
* 5	PAOZZ	4210015256692	05BU0	421157	EXTINGUISHER,FIRE PART OF KIT P/N 421783..... UOC:XBB	1
* 6	PAOZZ	4720015424805	05BU0	421881	HOSE ASSEMBLY PART OF KIT P/N 421783 UOC:XBB	1
* 7	PAOZZ	6150015421786	05BU0	421748	CABLE ASSEMBLY PART OF KIT P/N 421783..... UOC:XBB	1
* 8	PAOZZ	5999015433624	05BU0	421746	CAP,ELECTRICAL PART OF KIT P/N 421783..... UOC:XBB	1
* 9	PAOZZ	5305012135024	86403	9414722	SCREW #10-24 X 3/4 PART OF KIT P/N 421783..... UOC:XBB	2
* 10	PAOZZ	5310015336150	39428	95795A012	WASHER,LOCK #10 PART OF KIT P/N 421783..... UOC:XBB	2
* 11	PAOZZ	5310007653197	96906	MS27183-41	WASHER,FLAT #10 PART OF KIT P/N 421783..... UOC:XBB	2
* 12	PAOZZ	5310008093078	96906	MS27183-11	WASHER,FLAT 1/4 PART OF KIT P/N 421783..... UOC:XBB	6
* 13	PAOZZ	5310000614650	80205	M45913/3-4CG8C	NUT,SELF-LOCKING,HE 1/4-20..... UOC:XBB	3
* 14	PAOZZ	5305000712509	80204	B1821BH025C150N	SCREW,CAP,HEXAGON H 1/4-20 X 1.50 PART OF KIT P/N 421783..... UOC:XBB	2
* 15	PAOZZ	5305000680509	80204	B1821BH025C125N	SCREW,CAP,HEXAGON H 1/4-20 X 1.25 PART OF KIT P/N 421783..... UOC:XBB	1
* 16	PAOZZ	5310012902196	39428	90631A011	NUT,SELF-LOCKING,HE #10-24..... UOC:XBB	2
KIT	PAOZZ	4120015421128	05BU0	421783	PARTS KIT,FIRE EXTI..... UOC:XBB BRACKET,DOUBLE ANGL (1) 266F - 5 BRACKET,FIRE EXTING (1) 266H - 1 BRACKET,FIRE EXTING (1) 266I - 2	1

(1) ITEM NO	(2) SMR CODE	(3) NSN	(4) CAGEC	(5) PART NUMBER	(6) DESCRIPTION AND USABLE ON CODES(UOC)	(7) QTY
					BRACKET,MULTIPLE AN (1) 266G	2
					BRACKET,MOUNTING (1) 266F	5
					BRACKET,MOUNTING (1) 266F	5
					CLAMP,HOSE (2) 266F	6
					BRACKET,MULTIPLE AN (1) 266F	5
					CABLE ASSEMBLY (1) 266I	7
					CABLE ASSEMBLY,SPEC (1) 266F	1
					CAP,ELECTRICAL (1) 266I	8
					CONTROL,ALARM (1) 266I	1
					CONTROL,ALARM (2) 266F	3
					ELECTRONIC MODULE (1) 266G	1
					EXTINGUISHER,FIRE (1) 266H	3
					EXTINGUISHER,FIRE (1) 266I	5
					HOSE ASSEMBLY (1) 266I	6
					NOZZLE,FIRE HOSE (1) 266I	3
					NOZZLE,FIRE HOSE (1) 266H	4
					NUT,SELF-LOCKING (4) 266F	7
					NUT,SELF-LOCKING,CL (2) 266G	4
					NUT,SELF-LOCKING,HE (3) 266H	2
					O-RING (1) 266H	5
					O-RING (1) 266I	4
					SCREW (2) 266I	9
					SCREW (4) 266F	4
					SCREW,CAP,HEXAGON H (4) 266F	11
					SCREW,CAP,HEXAGON H (1) 266I	15
					SCREW,CAP,HEXAGON H (1) 266H	6
					SCREW,CAP,HEXAGON H (2) 266I	14
					STRAP,TIEDOWN,ELECT (3) 266F	2
					WASHER,FLAT (4) 266F	9
					WASHER,FLAT (2) 266H	7
					WASHER,FLAT (6) 266H	11
					WASHER,FLAT (6) 266I	12
					WASHER,LOCK (2) 266F	8
					WASHER,LOCK (4) 266F	10
					WASHER,LOCK (2) 266I	10
					WASHER,LOCK (4) 266F	12
					WASHER,LOCK (2) 266G	3

END OF FIGURE

1 — 2 thru 12

13 — 14 thru 16

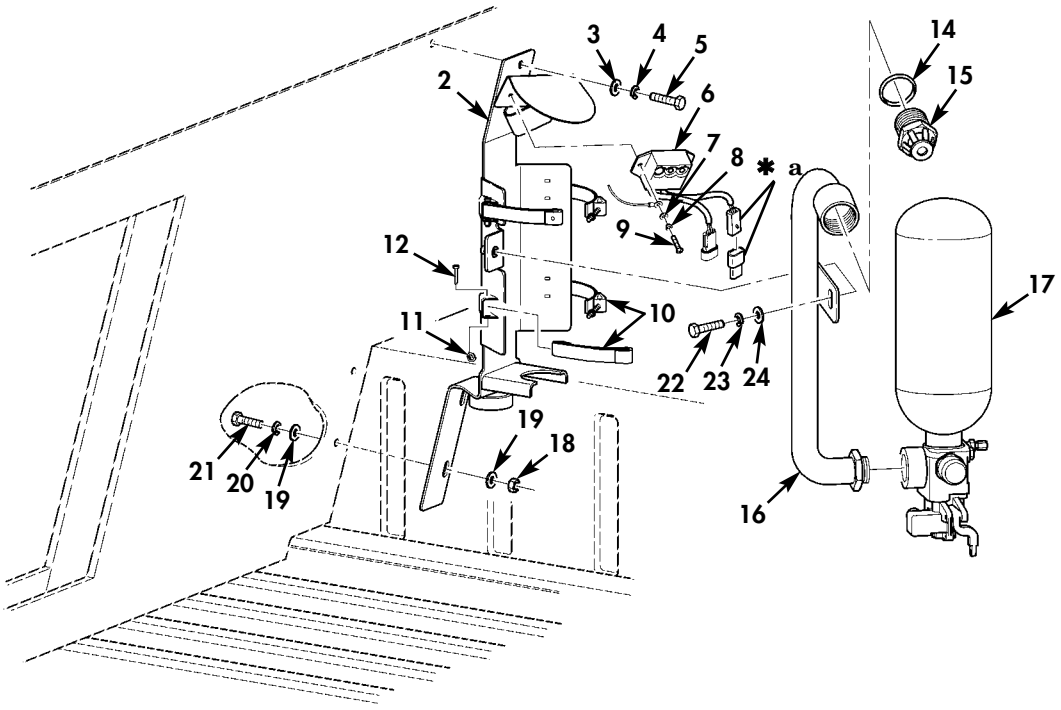

✱ **a** PART OF ITEM 6

Figure 266J. AFES Cargo Compartment Fire Extinguisher, Mounting Bracket, Sensor, and Related Hardware (M1151A1).

(1) ITEM NO	(2) SMR CODE	(3) NSN	(4) CAGEC	(5) PART NUMBER	(6) DESCRIPTION AND USABLE ON CODES(UOC)	(7) QTY
					GROUP 3307 SPECIAL PURPOSE KITS	
					FIG. 266J AFES CARGO COMPARTMENT FIRE EXTINGUISHER,MOUNTING BRACKET, SENSOR,AND RELATED HARDWARE (M1151A1)	
* 1	PAOOO	5340015548594	34623	6035842	BRACKET,MOUNTING PART OF KIT P/N 6034434..... UOC:TTA	1
* 2	XAOZZ		34623	6035841	.BRACKET,MOUNTING PART OF KIT P/N 6034434..... UOC:TTA,UU2	1
* 3	PAOZZ	5310000806004	96906	MS27183-14	.WASHER,FLAT 3/8 PART OF KIT P/N 6034434..... UOC:TTA,UU2	1
* 4	PAOZZ	5310006379541	80045	23MS35338-46	.WASHER,LOCK 3/8 PART OF KIT P/N 6034434..... UOC:TTA,UU2	1
* 5	PAOZZ	5305008213869	80204	B1821BH038C175N	.SCREW,CAP,HEXAGON H 3/8-16 X 1.75 PART OF KIT P/N 6034434..... UOC:TTA,UU2	1
* 6	PAOZZ	6350015429955	05BU0	421696	.CONTROL,ALARM PART OF KIT P/N 6034434..... UOC:TTA	1
* 7	PAOZZ	5310012349416	96906	MS51412-2	.WASHER,FLAT PART OF KIT P/N 6034434 UOC:TTA	2
* 8	PAOZZ	5310000453296	80205	MS35338-43	.WASHER,LOCK PART OF KIT P/N 6034434 UOC:TTA	2
* 9	PAOZZ	5305009846212	80205	MS35206-265	.SCREW,MACHINE PART OF KIT P/N 6034434..... UOC:TTA	2
* 10	PAOZZ	5340015548290	05BU0	421902	.STRAP,RETAINING PART OF KIT P/N 6034434..... UOC:TTA	2
* 11	PAOZZ	5325015548797	34623	6030302	.RING,RETAINING PART OF KIT P/N 6034434..... UOC:TTA	4
* 12	PAOZZ	5315007709181	96906	MS20392-3C39	.PIN,STRAIGHT HEADED PART OF KIT P/N 6034434..... UOC:TTA	4
* 13	PAOOO	4710015550263	34623	6035840	TUBE ASSEMBLY,METAL PART OF KIT P/N 6034434..... UOC:TTA,UU2	1
* 14	PAOZZ	5331008195111	81343	MS28778-24	.O-RING PART OF KIT P/N 6034434..... UOC:TTA,UU2	1
* 15	PAOZZ	4210014428750	05BU0	55845-4	.NOZZLE,FIRE HOSE PART OF KIT P/N 6034434..... UOC:TTA,UU2	1
* 16	XAOZZ		34623	6030882	.TUBE,BENT METALLIC PART OF KIT P/N 6034434..... UOC:TTA,UU2	1
* 17	PAOZZ	4210015256692	05BU0	421157	EXTINGUISHER,FIRE PART OF KIT P/N 6034434..... UOC:TTA,UU2	1

(1) ITEM NO	(2) SMR CODE	(3) NSN	(4) CAGEC	(5) PART NUMBER	(6) DESCRIPTION AND USABLE ON CODES(UOC)	(7) QTY
* 18	PAOZZ	5310009359021	96906	MS51943-35	NUT,SELF-LOCKING,HE 3/8-16 PART OF KIT P/N 6034434..... UOC:TTA,UU2	2
* 19	PAOZZ	5310000806004	96906	MS27183-14	WASHER,FLAT 3/8 PART OF KIT P/N 6034434..... UOC:TTA,UU2	4
* 20	PAOZZ	5310006379541	80045	23MS35338-46	WASHER,LOCK 3/8 PART OF KIT P/N 6034434..... UOC:TTA,UU2	2
* 21	PAOZZ	5305008080864	80204	B1821BH038C325N	SCREW,CAP,HEXAGON H 3/8-16 X 3.25 PART OF KIT P/N 6034434..... UOC:TTA,UU2	2
* 22	PAOZZ	5306002264827	80204	B1821BH031C100N	BOLT,MACHINE 5/16-18 X 1.00 PART OF KIT P/N 6034434..... UOC:TTA,UU2	1
* 23	PAOZZ	5310004079566	80205	MS35338-45	WASHER,LOCK 5/16 PART OF KIT P/N 6034434..... UOC:TTA,UU2	1
* 24	PAOZZ	5310000814219	96906	MS27183-12	WASHER,FLAT 5/16 PART OF KIT P/N 6034434..... UOC:TTA,UUA,UU2	1

END OF FIGURE

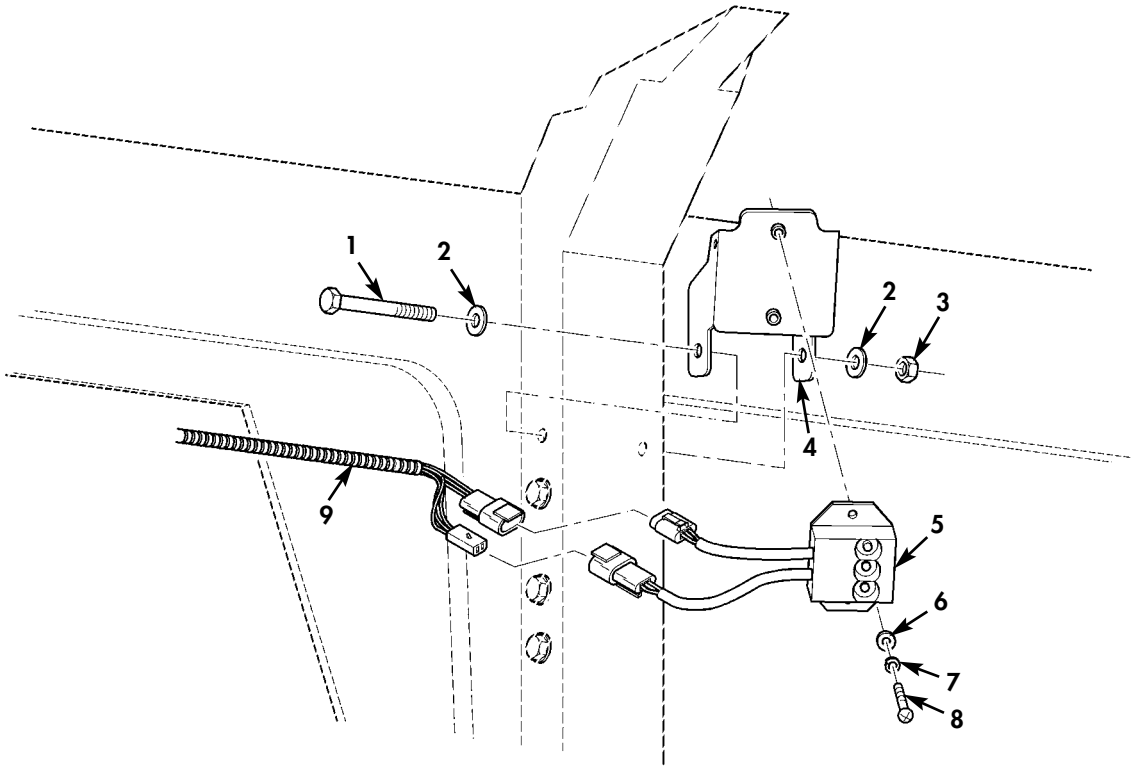

Figure 266K. AFES Crew Compartment Sensor Assembly and Related Parts (M1151A1/M1165A1).

(1) ITEM NO	(2) SMR CODE	(3) NSN	(4) CAGEC	(5) PART NUMBER	(6) DESCRIPTION AND USABLE ON CODES(UOC)	(7) QTY
					GROUP 3307 SPECIAL PURPOSE KITS	
					FIG. 266K AFES CREW COMPARTMENT SENSOR ASSEMBLY AND RELATED PARTS (M1151A1/M1165A1)	
* 1	PAOZZ	5305008080864	80204	B1821BH038C325N	SCREW,CAP,HEXAGON H 3/8-16 X 3.25 PART OF KIT P/N 6034434..... UOC:TTA,UU2	1
* 2	PAOZZ	5310000806004	96906	MS27183-14	WASHER,FLAT 3/8 PART OF KIT P/N 6034434..... UOC:TTA,UU2	2
* 3	PAOZZ	5310000614650	80205	M45913/3-4CG8C	NUT,SELF-LOCKING,HE 1/4-20 PART OF KIT P/N 6034434..... UOC:TTA,UU2	1
* 4	PAOZZ	5340015548286	34623	6034203	BRACKET,MOUNTING PART OF KIT P/N 6034434..... UOC:TTA,UU2	1
* 5	PAOZZ	6350015429955	05BU0	421696	CONTROL,ALARM PART OF KIT P/N 6034434..... UOC:TTA,UU2	1
* 6	PAOZZ	5310012349416	96906	MS51412-2	WASHER,FLAT #10 PART OF KIT P/N 6034434..... UOC:TTA,UU2	2
* 7	PAOZZ	5310000453296	80205	MS35338-43	WASHER,LOCK #10..... UOC:TTA,UU2	2
* 8	PAOZZ	5305009846212	80205	MS35206-265	SCREW,MACHINE #10-24 X 3/4 PART OF KIT P/N 6034434..... UOC:TTA,UU2	2
* 9	PAOZZ	6150015421786	05BU0	422117	WIRING HARNESS,BRAN PART OF KIT P/N 6034434..... UOC:TTA,UU2	1

END OF FIGURE

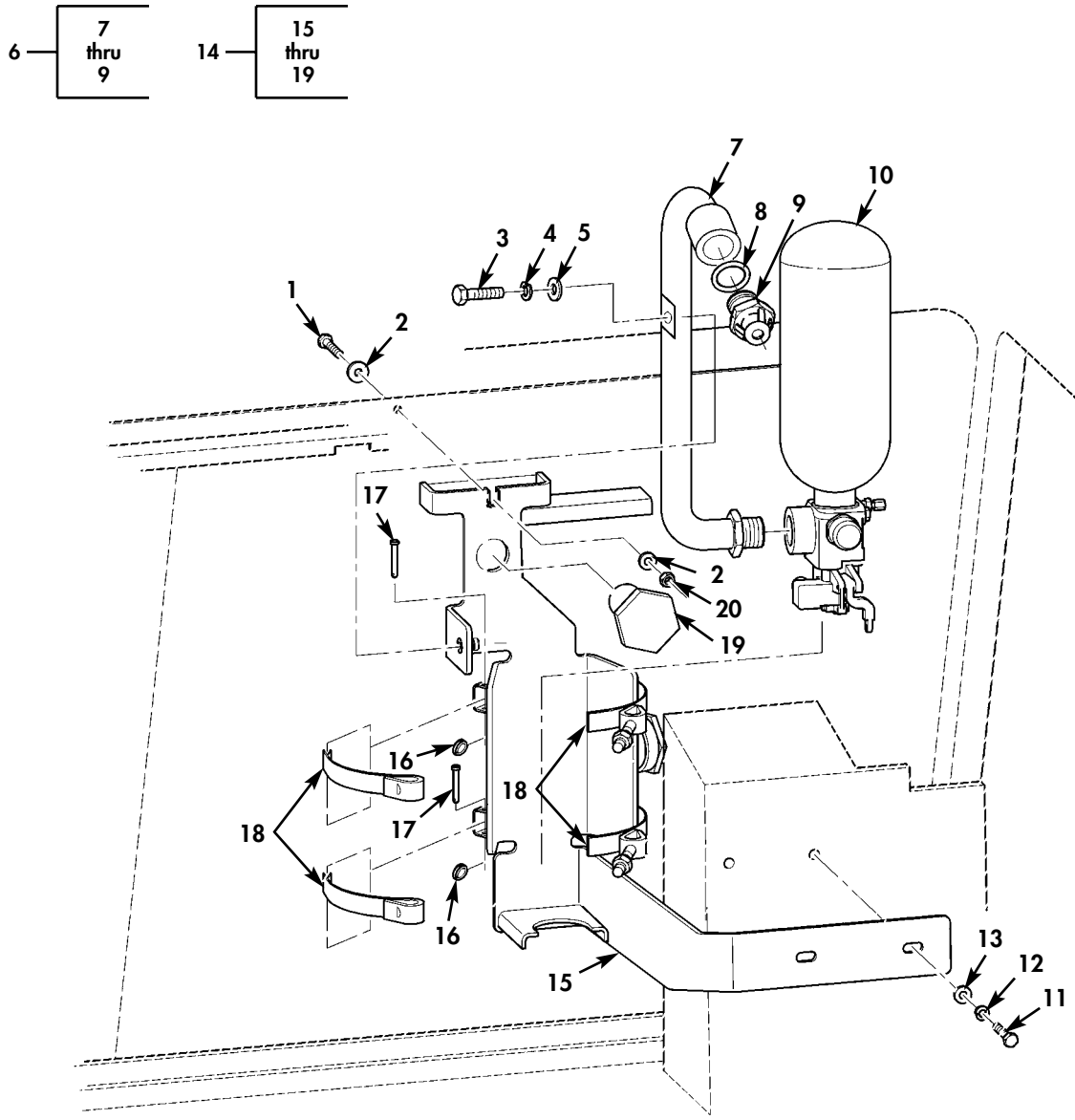

Figure 266L. AFES Crew Compartment Fire Extinguisher Bottle, Mounting Bracket, and Related Hardware (M1151A1/M1165A1).

(1) ITEM NO	(2) SMR CODE	(3) NSN	(4) CAGEC	(5) PART NUMBER	(6) DESCRIPTION AND USABLE ON CODES(UOC)	(7) QTY
					GROUP 3307 SPECIAL PURPOSE KITS	
					FIG. 266L AFES CREW COMPARTMENT FIRE EXTINGUISHER BOTTLE,MOUNTING BRACKET,AND RELATED HARDWARE (M1151A1/M1165A1)	
* 1	PAOZZ	5305008080864	80204	B1821BH038C325N	SCREW,CAP,HEXAGON H 3/8-16 X 3.25 PART OF KIT P/N 6034434..... UOC:TTA,UU2	1
* 2	PAOZZ	5310000806004	96906	MS27183-14	WASHER,FLAT 3/8 PART OF KIT P/N 6034434..... UOC:TTA,UU2	2
* 3	PAOZZ	5306002264827	80204	B1821BH031C100N	BOLT,MACHINE 5/16-18 X 1.00 PART OF KIT P/N 6034434..... UOC:TTA,UU2	1
* 4	PAOZZ	5310004079566	80205	MS35338-45	WASHER,LOCK 5/16 PART OF KIT P/N 6034434..... UOC:TTA,UU2	1
* 5	PAOZZ	5310000814219	96906	MS27183-12	WASHER,FLAT 5/16 PART OF KIT P/N 6034434..... UOC:UUA	1
* 6	PAOOO	4710015556995	34623	6031488	TUBE ASSEMBLY,METAL PART OF KIT P/N 6034434..... UOC:TTA,UU2	1
* 7	XAOZZ		34623	6030882	.TUBE,BENT METALLIC PART OF KIT P/N 6034434..... UOC:TTA,UU2	1
* 8	PAOZZ	5331008195111	81343	MS28778-24	.O-RING PART OF KIT P/N 6034434..... UOC:TTA,UU2	1
* 9	PAOZZ	4210014428750	05BU0	55845-4	.NOZZLE,FIRE HOSE PART OF KIT P/N 6034434..... UOC:TTA,UU2	1
* 10	PAOZZ	4210015256692	05BU0	421157	EXTINGUISHER,FIRE PART OF KIT P/N 6034434..... UOC:TTA,UU2	1
* 11	PAOZZ	5305007252317	80204	B1821BH038C150N	SCREW,CAP,HEXAGON H 3/8-16 X 1.50 PART OF KIT P/N 6034434..... UOC:TTA,UU2	2
* 12	PAOZZ	5310006379541	80045	23MS35338-46	WASHER,LOCK 3/8 PART OF KIT P/N 6034434..... UOC:TTA,UU2	2
* 13	PAOZZ	5310014124013	24617	2436163	WASHER,FLAT 3/8..... UOC:TTA,UU2	2
* 14	PAOOO	5340015546161	34623	6033651	BRACKET,MOUNTING PART OF KIT P/N 6034434..... UOC:TTA,UU2	1
* 15	XAOZZ		34623	6031156	.BRACKET,MOUNTING PART OF KIT P/N 6034434..... UOC:TTA,UU2	1
* 16	PAOZZ	5325015548797	34623	6030302	.RING,RETAINING..... UOC:TTA,UU2	4

(1) ITEM NO	(2) SMR CODE	(3) NSN	(4) CAGEC	(5) PART NUMBER	(6) DESCRIPTION AND USABLE ON CODES(UOC)	(7) QTY
* 17	PAOZZ	5315007709181	96906	MS20392-3C39	.PIN,STRAIGHT HEADED PART OF KIT P/N 6034434..... UOC:TTA,UU2	4
* 18	PAOZZ	5340015548290	05BU0	421902	.STRAP,RETAINING PART OF KIT P/N 6034434..... UOC:TTA,UU2	2
* 19	PAOZZ	5340015552871	61423	192579-0022	.PLUG,EXPANSION PART OF KIT P/N 6034434..... UOC:TTA,UU2	1
* 20	PAOZZ	5310000614650	80205	M45913/3-4CG8C	NUT,SELF-LOCKING,HE 1/4-20 PART OF KIT P/N 6034434..... UOC:TTA,UU2	1

END OF FIGURE

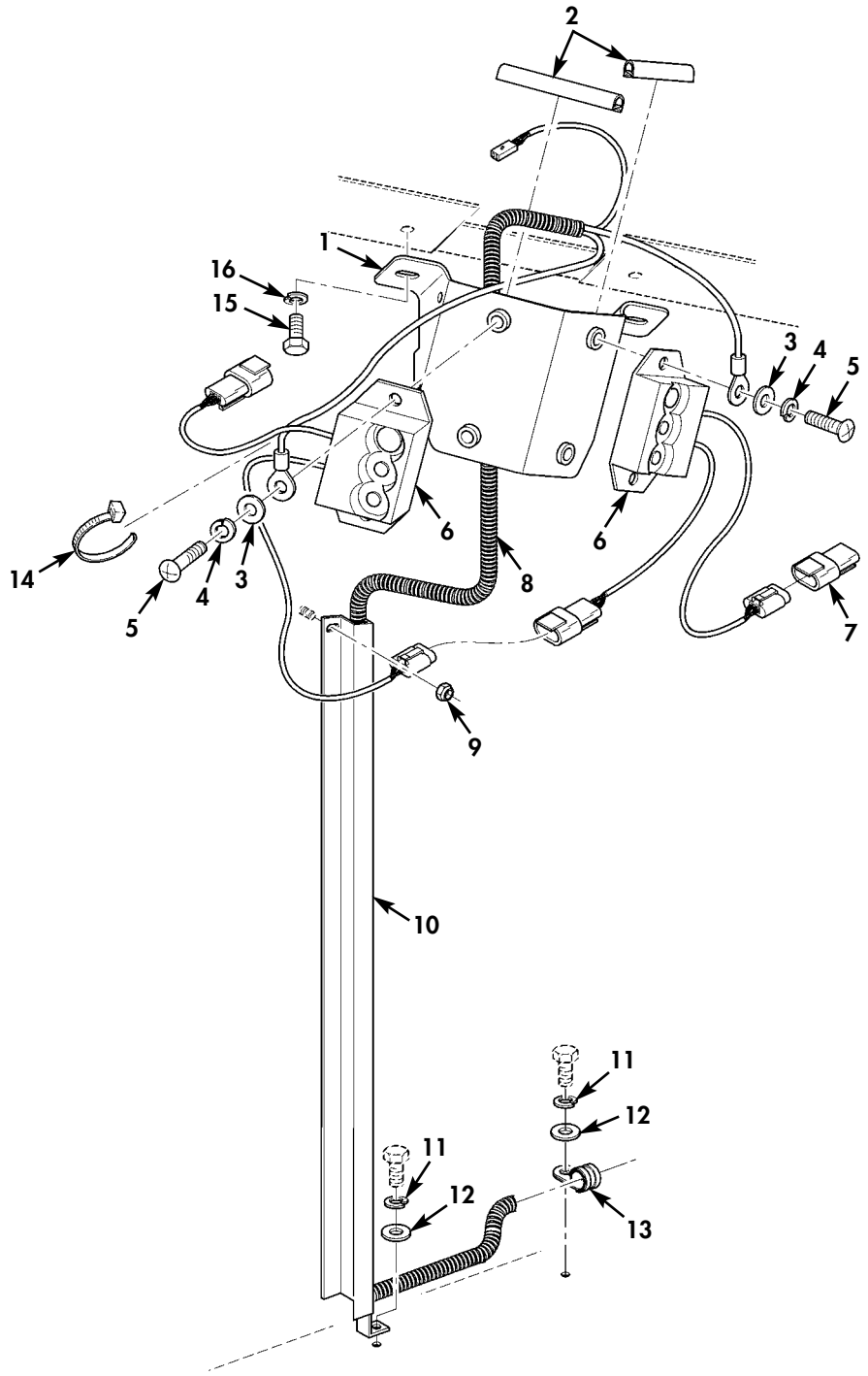

Figure 266M. AFES Crew Compartment Sensor and Bracket Assembly (M1152A1).

(1) ITEM NO	(2) SMR CODE	(3) NSN	(4) CAGEC	(5) PART NUMBER	(6) DESCRIPTION AND USABLE ON CODES(UOC)	(7) QTY
					GROUP 3307 SPECIAL PURPOSE KITS	
					FIG. 266M AFES CREW COMPARTMENT SENSOR AND BRACKET ASSEMBLY (M1152A1)	
* 1	PAOZZ		34623	6033127	BRACKET,MOUNTING PART OF KIT P/N 6036045..... UOC:UUA	1
* 2	MOOZZ		34623	6022935	EDGE PROTECTOR MAKE FROM EDGE PROTECTOR P/N 6006218, 2.63 INCHES LONG PART OF KIT P/N 6036045..... UOC:UUA	2
* 3	PAOZZ	5310012349416	96906	MS51412-2	WASHER,FLAT #10 PART OF KIT P/N 6036045..... UOC:UUA	4
* 4	PAOZZ	5310000453296	80205	MS35338-43	WASHER,LOCK #10 PART OF KIT P/N 6036045..... UOC:UUA	4
* 5	PAOZZ	5305009846212	80205	MS35206-265	SCREW,MACHINE #10-24 X 3/4 PART OF KIT P/N 6036045..... UOC:UUA	4
* 6	PAOZZ	6350015429955	05BU0	421696	CONTROL,ALARM PART OF KIT P/N 6036045..... UOC:UUA	2
* 7	PAOZZ	5999015433624	05BU0	421746	CAP,ELECTRICAL END OF LINE DEVICE PART OF KIT P/N 6036045..... UOC:UUA	1
* 8	PAOZZ		05BU0	422195	WIRING HARNESS,BRAN PART OF KIT P/N 6036045..... UOC:UUA	1
* 9	PAOZZ	5310000614650	81349	M45913/3-4CG8C	NUT,SELF-LOCKING,HE 1/4-20 PART OF KIT P/N 6036045..... UOC:UUA	1
* 10	PAOZZ		34623	6037175	RETAINER,HARNESS PART OF KIT P/N 6036045..... UOC:UUA	1
* 11	PAOZZ	5310005825965	80205	MS35338-44	WASHER,LOCK 1/4 PART OF KIT P/N 6036045..... UOC:UUA	2
* 12	PAOZZ	5310013330060	96906	MS51412-23	WASHER,FLAT 1/4 PART OF KIT P/N 6036045..... UOC:UUA	2
* 13	PAOZZ	5340000886655	80205	MS21333-101	CLAMP,LOOP PART OF KIT P/N 6036045.. UOC:UUA	1
* 14	PAOZZ	5975008994606	96906	MS3367-2-0	STRAP,TIEDOWN,ELECT PART OF KIT P/N 6036045..... UOC:UUA	12
* 15	PAOZZ		39428	90096A581	SCREW,TAPPING 5/16-18 X 3/4 PART OF KIT P/N 6036045..... UOC:UUA	2
* 16	PAOZZ	5310004079566	80205	MS35338-45	WASHER,LOCK 5/16 PART OF KIT P/N 6036045..... UOC:UUA	2

END OF FIGURE

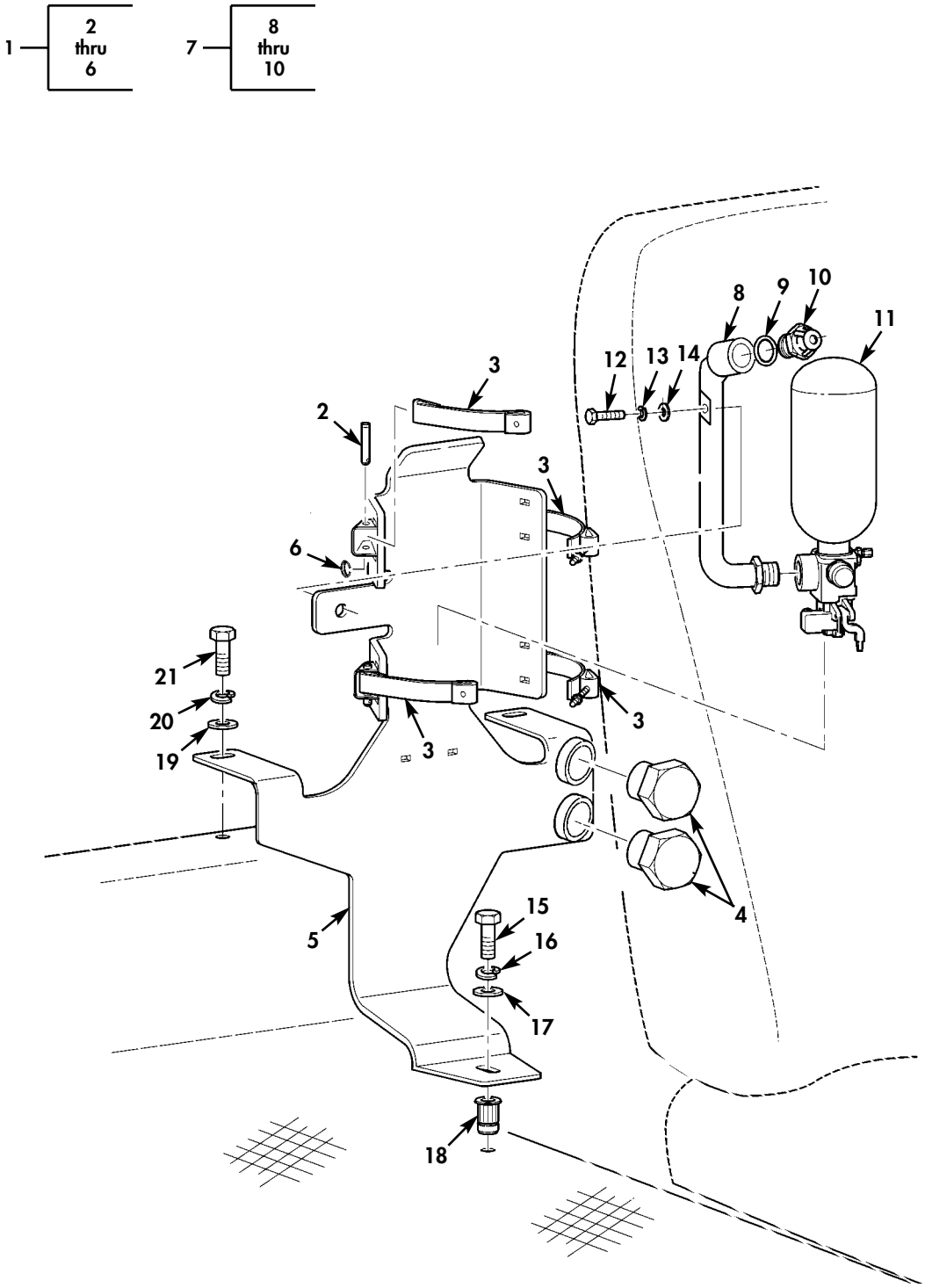

Figure 266N. AFES Crew Compartment Fire Extinguisher, Mounting Bracket, and Related Hardware (M1152A1).

(1) ITEM NO	(2) SMR CODE	(3) NSN	(4) CAGEC	(5) PART NUMBER	(6) DESCRIPTION AND USABLE ON CODES(UOC)	(7) QTY
					GROUP 3307 SPECIAL PURPOSE KITS	
					FIG. 266N AFES CREW COMPARTMENT FIRE EXTINGUISHER,MOUNTING BRACKET, AND RELATED HARDWARE (M1152A1)	
* 1	PAOOO		34623	6035257	BRACKET,FIRE EXTING PART OF KIT P/N 6036045..... UOC:UUA	1
* 2	PAOZZ	5315007709181	96906	MS20392-3C39	.PIN,STRAIGHT HEADED PART OF KIT P/N 6036045..... UOC:UUA	4
* 3	PAOZZ	5340015548290	05BU0	421902	.STRAP,RETAINING PART OF KIT P/N 6036045..... UOC:UUA	2
* 4	PAOZZ	5340015552871	61423	192579-0022	.PLUG,EXPANSION PART OF KIT P/N 6036045..... UOC:UUA	2
* 5	XAOZZ		34623	6033359	.BRACKET,MOUNTING PART OF KIT P/N 6036045..... UOC:UUA	1
* 6	PAOZZ	5325015548797	34623	6030302	.RING,RETAINING PART OF KIT P/N 6036045..... UOC:UUA	4
* 7	PAOOO		34623	6032845	TUBE ASSEMBLY,METAL PART OF KIT P/N 6036045..... UOC:UUA	1
* 8	XAOZZ		34623	6032796	.TUBE,BENT METALLIC PART OF KIT P/N 6036045..... UOC:UUA	1
* 9	PCOZZ	5331008195111	81343	MS28778-24	.O-RING PART OF KIT P/N 6036045..... UOC:UUA	1
* 10	PAOZZ	4210014428750	05BU0	55845-4	.NOZZLE,FIRE HOSE PART OF KIT P/N 6036045..... UOC:UUA	1
* 11	PAOZZ	4210015256692	05BU0	422034	EXTINGUISHER,FIRE PART OF KIT P/N 6036045..... UOC:UUA	1
* 12	PAOZZ	5306002264827	80204	B1821BH031C100N	BOLT,MACHINE 5/16-18 X 1.00 PART OF KIT P/N 6036045..... UOC:UUA	1
* 13	PAOZZ	5310004079566	80205	MS35338-45	WASHER,LOCK 5/16 PART OF KIT P/N 6036045..... UOC:UUA	1
* 14	PAOZZ	5310000814219	96906	MS27183-12	WASHER,FLAT 5/16 PART OF KIT P/N 6036045..... UOC:UUA	1
* 15	PAOZZ	5305000680511	80204	B1821BH038C125N	SCREW,CAP,HEXAGON H 3/8-16 X 1.25 PART OF KIT P/N 6036045..... UOC:UUA	1
* 16	PAOZZ	5310000045033	80205	MS35338-46	WASHER,LOCK 3/8 PART OF KIT P/N 6036045..... UOC:UUA	1

(1) ITEM NO	(2) SMR CODE	(3) NSN	(4) CAGEC	(5) PART NUMBER	(6) DESCRIPTION AND USABLE ON CODES(UOC)	(7) QTY
* 17	PAOZZ	5310000806004	96906	MS27183-14	WASHER,FLAT 3/8 PART OF KIT P/N 6036045..... UOC:UUA	1
* 18	PAOZZ		78276	ALS9B-616-312	INSERT,SCREW THREAD PART OF KIT P/N 6036045..... UOC:UUA	1
* 19	PAOZZ	5310013330060	96906	MS51412-23	WASHER,FLAT 1/4 PART OF KIT P/N 6036045..... UOC:UUA	2
* 20	PAOZZ	5310005825965	80205	MS35338-44	WASHER,LOCK 1/4 PART OF KIT P/N 6036045..... UOC:UUA	2
* 21	PAOZZ	5305002253842	80204	B1821BH025C113N	SCREW,CAP,HEXAGON H 1/4-20 X 1.125 PART OF KIT P/N 6036045..... UOC:UUA	2

END OF FIGURE

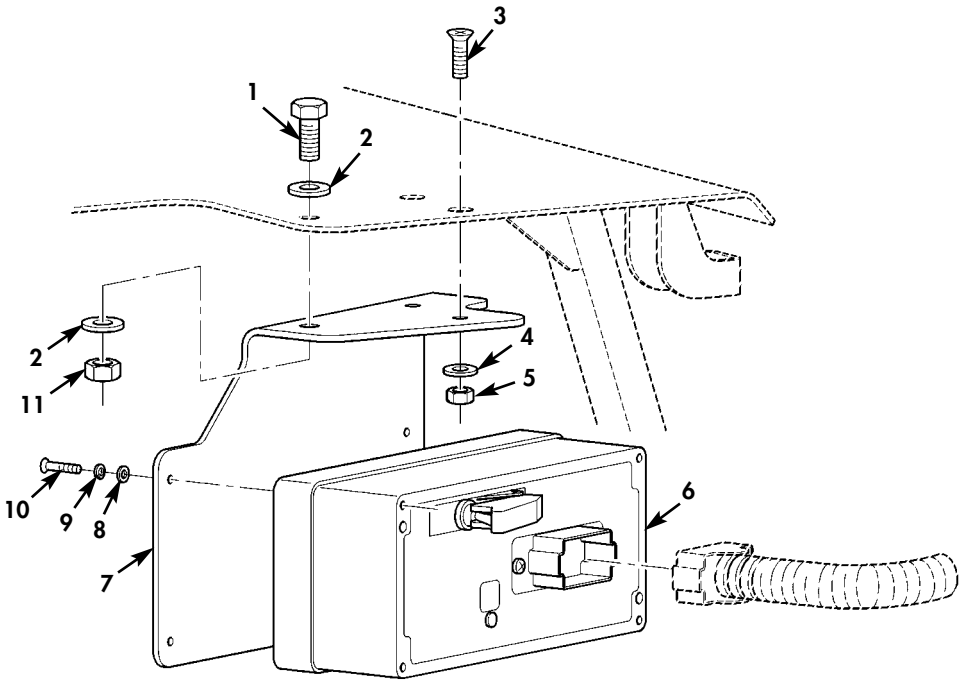

Figure 266O. AFES Master Controller and Bracket Assembly (Standard Radio Rack, M1151A1, M1152A1, M1165A1) (Sheet 1 of 2).

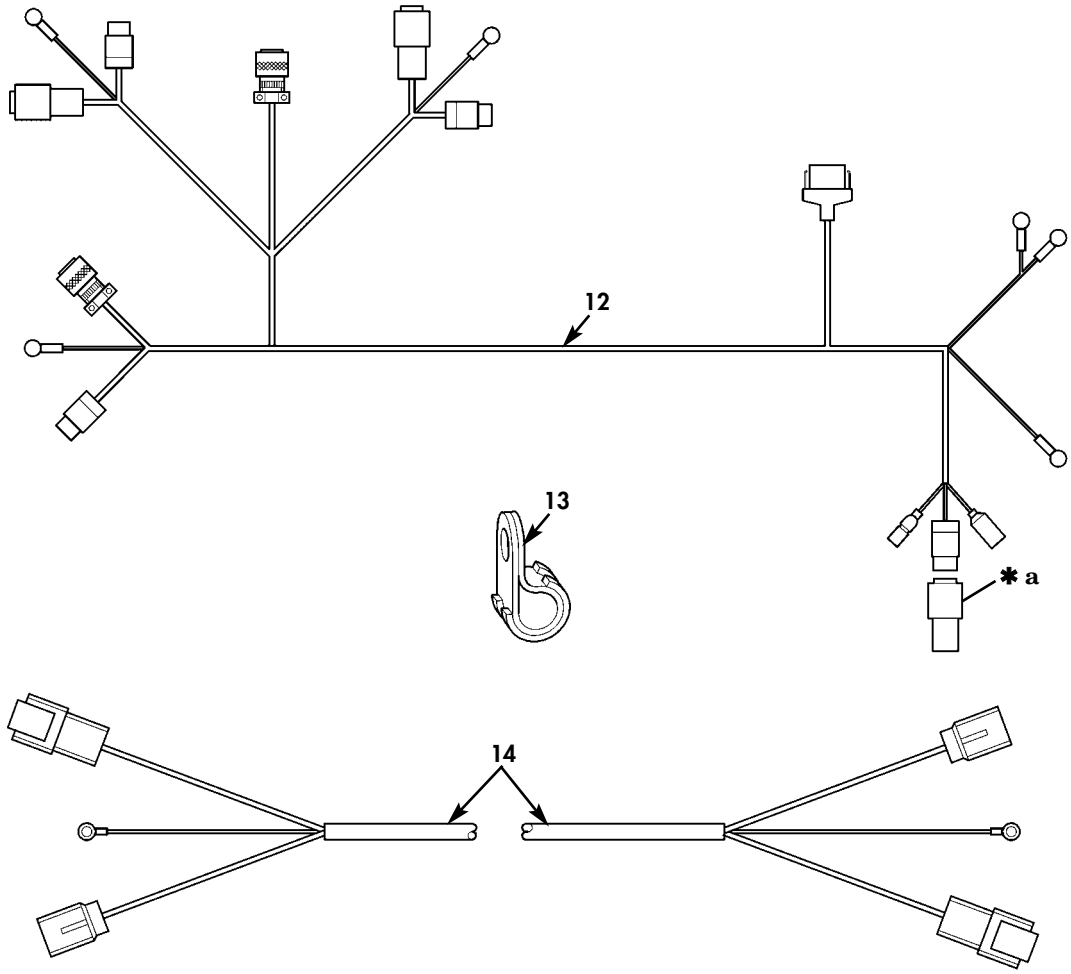

✱ **a** PART OF ITEM 13

Figure 266O. AFES Master Controller and Bracket Assembly (Standard Radio Rack, M1151A1, M1152A1, M1165A1) (Sheet 2 of 2).

(1) ITEM NO	(2) SMR CODE	(3) NSN	(4) CAGEC	(5) PART NUMBER	(6) DESCRIPTION AND USABLE ON CODES(UOC)	(7) QTY
					GROUP 3307 SPECIAL PURPOSE KITS	
					FIG. 266O AFES MASTER CONTROLLER AND BRACKET ASSEMBLY (STANDARD RADIO RACK,M1151A1,M1152A1,M1165A1)	
* 1	PAOZZ	5306002264827	80204	B1821BH031C100N	BOLT,MACHINE 5/16-18 X 1.00 PART OF KIT P/N 6036045, PART OF KIT P/N 6034434..... UOC:TTA,UUA,UU2	1
* 2	PAOZZ	5310011191024	24617	2436162	WASHER,FLAT 5/16 PART OF KIT P/N 6036045, PART OF KIT P/N 6034434.... UOC:TTA,UUA,UU2	2
* 3	PAOZZ	5305009543937	80205	MS35190-290	SCREW,MACHINE 1/4-20 X 7/8 PART OF KIT P/N 6036045, PART OF KIT P/N 6034434..... UOC:TTA,UUA,UU2	2
* 4	PAOZZ	5310005825965	80205	MS35338-44	WASHER,LOCK 1/4 PART OF KIT P/N 6036045, PART OF KIT P/N 6034434.... UOC:TTA,UUA,UU2	2
* 5	PAOZZ	5310000614650	81349	M45913/3-4CG8C	NUT,SELF-LOCKING,HE 1/4-20 PART OF KIT P/N 6036045, PART OF KIT P/N 6034434..... UOC:TTA,UUA,UU2	2
* 6	PAOZZ	5963015433619	05BU0	421884	ELECTRONIC MODULE PART OF KIT P/N 6036045, PART OF KIT P/N 6034434.... UOC:TTA,UUA,UU2	1
* 7	PAOZZ		34623	6031522	BRACKET,MOUNTING PART OF KIT P/N 6036045, PART OF KIT P/N 6034434.... UOC: TTA,UUA,UU2	1
* 8	PAOZZ	5310013034701	96906	MS51412-1	WASHER,FLAT #6 PART OF KIT P/N 6036045, PART OF KIT P/N 6034434.... UOC:TTA,UUA,UU2	4
* 9	PAOZZ	5310000131044	94135	12Z3038PC20	WASHER,LOCK #6 PART OF KIT P/N 6036045, PART OF KIT P/N 6034434.... UOC:TTA,UUA,UU2	4
* 10	PAOZZ	5305009844992	80205	MS35206-232	SCREW,MACHINE #6-32 X 3/4 PART OF KIT P/N 6036045, PART OF KIT P/N 6034434..... UOC:TTA,UUA	4
* 11	PAOZZ	5310008140673	81349	M45913/3-5CG8C	NUT,SELF-LOCKING,HE 5/16-18 PART OF KIT P/N 6036045, PART OF KIT P/N 6034434..... UOC:TTA,UUA,UU2	1
* 12	PAOZZ	6150015421786	05BU0	422117	WIRING HARNESS,BRAN PART OF KIT P/N 6034434..... UOC:TTA,UU2	1
* 13	PAOZZ	5340009848540	80205	MS21333-102	CLAMP,LOOP..... UOC:TTA,UU2	1
* 14	PAOZZ		34623	6034418	CABLE ASSEMBLY PART OF KIT P/N 6034434..... UOC:TTA,UU2	1

END OF FIGURE

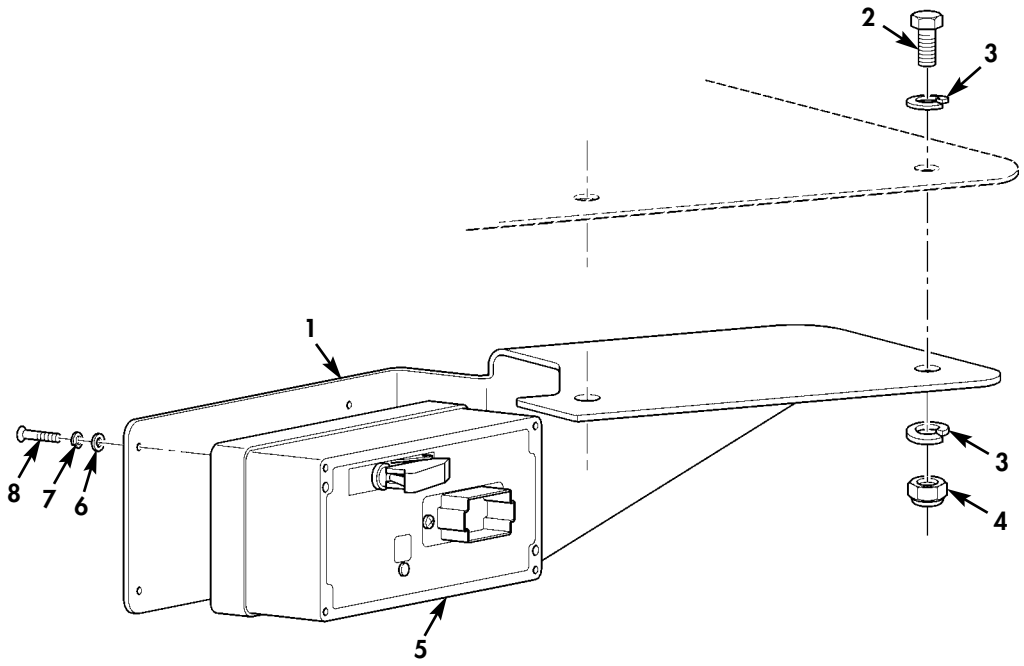

Figure 266P. AFES Master Controller and Bracket Assembly (Integrated Radio Rack, M1151A1, M1152A1, M1165A1).

(1) ITEM NO	(2) SMR CODE	(3) NSN	(4) CAGEC	(5) PART NUMBER	(6) DESCRIPTION AND USABLE ON CODES(UOC)	(7) QTY
					GROUP 3307 SPECIAL PURPOSE KITS	
					FIG. 266P AFES MASTER CONTROLLER AND BRACKET ASSEMBLY (INTEGRATED RADIO RACK,M1151A1,M1152A1,M1165A1)	
* 1	PAOZZ		34623	6031245	BRACKET,MOUNTING PART OF KIT P/N 6036045, PART OF KIT P/N 6034434.... UOC:TTA,UUA,UU2	1
* 2	PAOZZ	5306002264832	80204	B1821BH031C175N	BOLT,MACHINE 5/16-18 X 1.75 PART OF KIT P/N 6036045, PART OF KIT P/N 6034434..... UOC:TTA,UUA,UU2	2
* 3	PAOZZ	5310004079566	80205	MS35338-45	WASHER,LOCK 5/16 PART OF KIT P/N 6036045, PART OF KIT P/N 6034434.... UOC:TTA,UUA,UU2	4
* 4	PAOZZ	5310008140673	81349	M45913/3-5CG8C	NUT,SELF-LOCKING,HE 5/16-18 PART OF KIT P/N 6036045, PART OF KIT P/N 6034434..... UOC:TTA,UUA,UU2	2
* 5	PAOZZ	5963015433619	05BU0	421884	ELECTRONIC MODULE PART OF KIT P/N 6036045, PART OF KIT P/N 6034434.... UOC:TTA,UUA,UU2	1
* 6	PAOZZ	5310013034701	96906	MS51412-1	WASHER,FLAT #6 PART OF KIT P/N 6036045, PART OF KIT P/N 6034434.... UOC:TTA,UUA,UU2	4
* 7	PAOZZ	5310000131044	94135	12Z3038PC20	WASHER,LOCK #6 PART OF KIT P/N 6036045, PART OF KIT P/N 6034434.... UOC:TTA,UUA,UU2	4
* 8	PAOZZ	5305009844992	80205	MS35206-232	SCREW,MACHINE #6-32 X 3/4 PART OF KIT P/N 6036045, PART OF KIT P/N 6034434..... UOC:TTA,UUA,UU2	4
KIT	PAOZZ		34623	6036045	PARTS KIT,FIRE EXTI..... UOC:UUA	1
					BOLT,MACHINE (1) 266O - 1	
					BOLT,MACHINE (1) 266N - 12	
					BOLT,MACHINE (2) 266P - 2	
					BRACKET,FIRE EXTING (1) 266N - 1	
					BRACKET,MOUNTING (1) 266M - 1	
					BRACKET,MOUNTING (1) 266N - 5	
					BRACKET,MOUNTING (1) 266P - 1	
					BRACKET,MOUNTING (1) 266O - 7	
					CAP,ELECTRICAL (1) 266M - 7	
					CLAMP,LOOP (1) 266M - 13	
					CONTROL,ALARM (2) 266M - 6	
					EDGE PROTECTOR (2) 266M - 2	
					ELECTRONIC MODULE (1) 266P - 5	
					ELECTRONIC MODULE (1) 266O - 6	
					EXTINGUISHER,FIRE (1) 266N - 11	
					INSERT,SCREW THREAD (1) 266N - 18	
					NOZZLE,FIRE HOSE (1) 266N - 10	
					NUT,SELF-LOCKING,HE (1) 266O - 11	
					NUT,SELF-LOCKING,HE (1) 266M - 9	
					NUT,SELF-LOCKING,HE (2) 266P - 4	

(1) ITEM NO	(2) SMR CODE	(3) NSN	(4) CAGEC	(5) PART NUMBER	(6) DESCRIPTION AND USABLE ON CODES(UOC)	(7) QTY
					NUT,SELF-LOCKING,HE (2) 266O - 5	
					O-RING (1) 266N - 9	
					PIN,STRAIGHT HEADED (4) 266N - 2	
					PLUG,EXPANSION (2) 266N - 4	
					RETAINER,HARNESS (1) 266M - 10	
					RING,RETAINING (4) 266N - 6	
					SCREW,CAP,HEXAGON H (1) 266N - 15	
					SCREW,CAP,HEXAGON H (2) 266N - 21	
					SCREW,MACHINE (2) 266O - 3	
					SCREW,MACHINE (4) 266O - 10	
					SCREW,MACHINE (4) 266P - 8	
					SCREW,MACHINE (4) 266M - 5	
					SCREW,TAPPING (2) 266M - 15	
					STRAP,RETAINING (2) 266N - 3	
					STRAP,TIEDOWN,ELECT (12) 266M - 14	
					TUBE ASSEMBLY,METAL (1) 266N - 7	
					TUBE,BENT METALLIC (1) 266N - 8	
					WASHER,FLAT (1) 266N - 14	
					WASHER,FLAT (1) 266N - 17	
					WASHER,FLAT (2) 266N - 19	
					WASHER,FLAT (2) 266M - 12	
					WASHER,FLAT (2) 266O - 2	
					WASHER,FLAT (4) 266P - 6	
					WASHER,FLAT (4) 266O - 8	
					WASHER,FLAT (4) 266M - 3	
					WASHER,LOCK (1) 266N - 16	
					WASHER,LOCK (1) 266N - 13	
					WASHER,LOCK (2) 266M - 16	
					WASHER,LOCK (2) 266M - 11	
					WASHER,LOCK (2) 266N - 20	
					WASHER,LOCK (2) 266O - 4	
					WASHER,LOCK (4) 266O - 9	
					WASHER,LOCK (4) 266P - 3	
					WASHER,LOCK (4) 266P - 7	
					WASHER,LOCK (4) 266M - 4	
					WIRING HARNESS,BRAN (1) 266M - 8	
KIT	PAOZZ	4210015541177	34623	6034434	PARTS KIT,FIRE EXTI.....	1
					UOC:TTA,UU2	
					BOLT,MACHINE (1) 266L - 3	
					BOLT,MACHINE (1) 266O - 1	
					BOLT,MACHINE (1) 266J - 22	
					BOLT,MACHINE (2) 266P - 2	
					BRACKET,MOUNTING (1) 266K - 4	
					BRACKET,MOUNTING (1) 266J - 1	
					BRACKET,MOUNTING (1) 266J - 2	
					BRACKET,MOUNTING (1) 266L - 15	
					BRACKET,MOUNTING (1) 266L - 14	
					BRACKET,MOUNTING (1) 266P - 1	
					BRACKET,MOUNTING (1) 266O - 7	
					CABLE ASSEMBLY (1) 266O - 14	
					CONTROL,ALARM (1) 266J - 6	
					CONTROL,ALARM (1) 266K - 5	
					ELECTRONIC MODULE (1) 266P - 5	
					ELECTRONIC MODULE (1) 266O - 6	
					EXTINGUISHER,FIRE (1) 266L - 10	
					EXTINGUISHER,FIRE (1) 266J - 17	

(1) ITEM NO	(2) SMR CODE	(3) NSN	(4) CAGEC	(5) PART NUMBER	(6) DESCRIPTION AND USABLE ON CODES(UOC)	(7) QTY
					NOZZLE,FIRE HOSE (1) 266J -	15
					NOZZLE,FIRE HOSE (1) 266L -	9
					NUT,SELF-LOCKING,HE (1) 266O -	11
					NUT,SELF-LOCKING,HE (1) 266L -	20
					NUT,SELF-LOCKING,HE (1) 266K -	3
					NUT,SELF-LOCKING,HE (2) 266J -	18
					NUT,SELF-LOCKING,HE (2) 266P -	4
					NUT,SELF-LOCKING,HE (2) 266O -	5
					O-RING (1) 266L -	8
					O-RING (1) 266J -	14
					PIN,STRAIGHT HEADED (4) 266J -	12
					PIN,STRAIGHT HEADED (4) 266L -	17
					PLUG,EXPANSION (1) 266L -	19
					RING,RETAINING (4) 266J -	11
					SCREW,CAP,HEXAGON H (1) 266J -	5
					SCREW,CAP,HEXAGON H (1) 266K -	1
					SCREW,CAP,HEXAGON H (1) 266L -	1
					SCREW,CAP,HEXAGON H (2) 266J -	21
					SCREW,CAP,HEXAGON H (2) 266L -	11
					SCREW,MACHINE (2) 266J -	9
					SCREW,MACHINE (2) 266O -	3
					SCREW,MACHINE (2) 266K -	8
					SCREW,MACHINE (4) 266O -	10
					SCREW,MACHINE (4) 266P -	8
					STRAP,RETAINING (2) 266L -	18
					STRAP,RETAINING (2) 266J -	10
					TUBE ASSEMBLY,METAL (1) 266J -	13
					TUBE ASSEMBLY,METAL (1) 266L -	6
					TUBE,BENT METALLIC (1) 266J -	16
					TUBE,BENT METALLIC (1) 266L -	7
					WASHER,FLAT (1) 266L -	5
					WASHER,FLAT (1) 266J -	24
					WASHER,FLAT (1) 266J -	3
					WASHER,FLAT (2) 266L -	2
					WASHER,FLAT (2) 266K -	2
					WASHER,FLAT (2) 266O -	2
					WASHER,FLAT (2) 266J -	7
					WASHER,FLAT (2) 266K -	6
					WASHER,FLAT (4) 266P -	6
					WASHER,FLAT (4) 266O -	8
					WASHER,FLAT (4) 266J -	19
					WASHER,FLAT (6) 202B -	22
					WASHER,LOCK (1) 266J -	4
					WASHER,LOCK (1) 266J -	23
					WASHER,LOCK (1) 266L -	4
					WASHER,LOCK (2) 266J -	8
					WASHER,LOCK (2) 266L -	12
					WASHER,LOCK (2) 266J -	20
					WASHER,LOCK (2) 266O -	4
					WASHER,LOCK (4) 266O -	9
					WASHER,LOCK (4) 266P -	3
					WASHER,LOCK (4) 266P -	7
					WIRING HARNESS,BRAN (1) 266O -	12
					WIRING HARNESS,BRAN (1) 266K -	9

END OF FIGURE

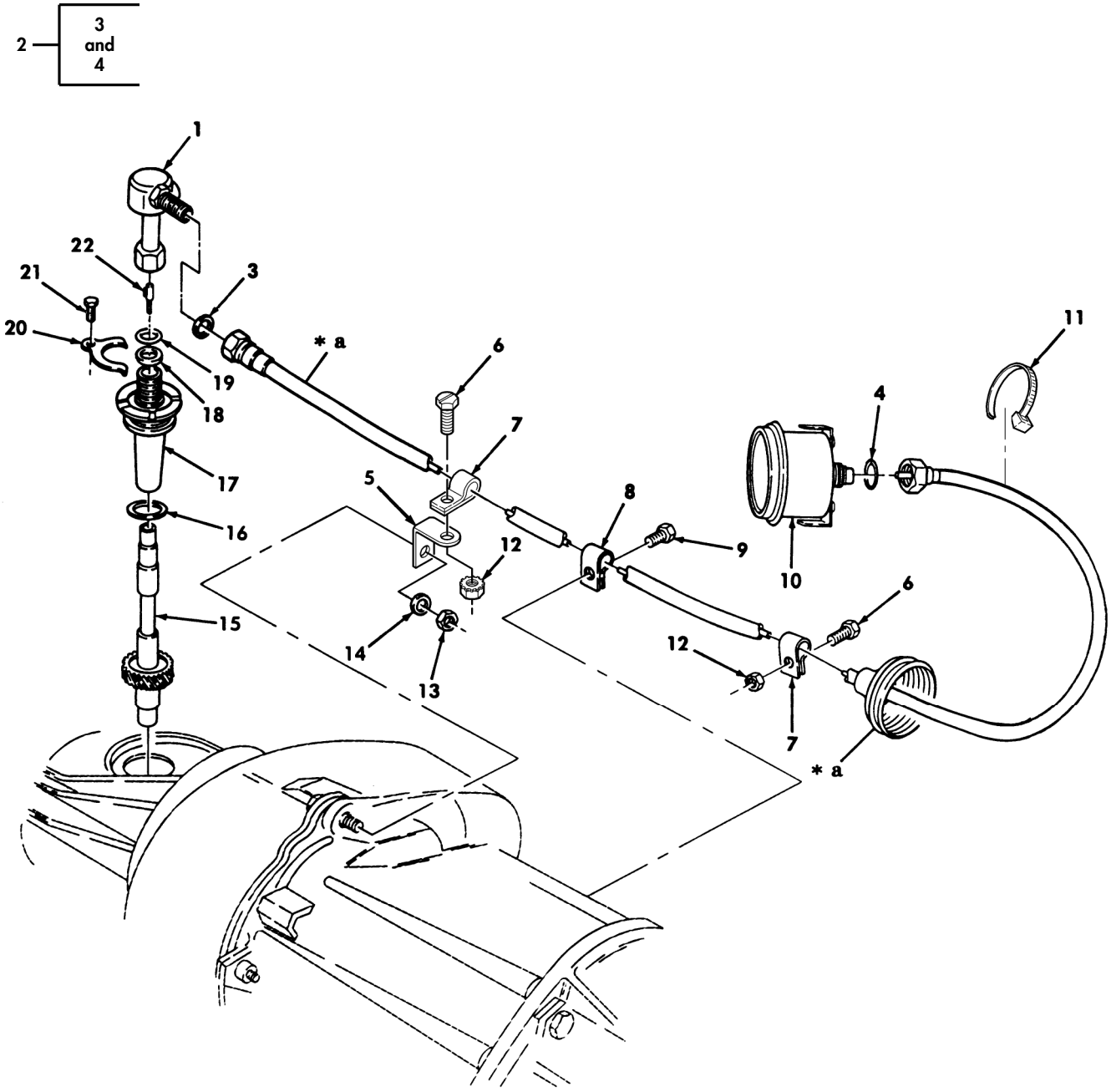

✱ **a** PART OF ITEM 2

Figure 267. Speedometer, Speedometer Drive, and Related Parts (Serial Number 246889 and Below).

(1) ITEM NO	(2) SMR CODE	(3) NSN	(4) CAGEC	(5) PART NUMBER	(6) DESCRIPTION AND USABLE ON CODES(UOC)	(7) QTY
					GROUP 47 GAGES,WEIGHING,AND MEASURING DEVICES	
					GROUP 4701 INSTRUMENTS	
					FIG. 267 SPEEDOMETER,SPEEDOMETER DRIVE,AND RELATED PARTS(SERIAL NUMBER 246889 AND BELOW)	
1	PAOZZ	2590012125868	19207	12338430	ADAPTER,SPEEDOMETER.....	1
2	PAOZZ	6680014429413	19200	12338428-2	SHAFT ASSEMBLY,FLEX.....	1
3	PAOZZ	5331012147392	19207	12338998	.O-RING.....	1
4	PAOZZ	5331012167393	19207	12338997	.O-RING.....	1
5	PAOZZ	5340014481213	19207	12460199	BRACKET,ANGLE.....	1
* 6	PAOZZ	5305005829501	80045	4201-87-23	SCREW,CAP HEXAGON.....	2
7	PAOZZ	5340006899514	96906	MS21333-70	CLAMP,LOOP.....	2
8	PAOZZ	5340008437825	80205	MS21333-68	CLAMP,LOOP.....	1
9	PAOZZ	5305014731199	24617	448621	SCREW,TAPPING #10-32 X 3/8.....	1
10	PAOZZ	6680011952146	19207	12338463	SPEEDOMETER.....	1
11	PAOZZ	5975001563253	81343	MS3367-2-9	STRAP,TIEDOWN,ELECT.....	1
12	PAOZZ	5310001249265	72582	271169	NUT,PLAIN ASSEMBLE.....	2
13	PAOZZ	5310012666392	34623	5593047	NUT,PLAIN HEXAGON 10M-1.5.....	1
14	PAOZZ	5310005956057	80205	MS15795-815	WASHER,FLAT 10 MM.....	1
15	PAOZZ	3040014459110	34623	12469188	GEARSHAFT,HELICAL.....	1
16	PAOZZ	5331011958889	34623	12339002	O-RING.....	1
17	PAOZZ	3040011923673	19207	12339963	ADAPTER,SPEEDOMETER.....	1
18	PAOZZ	5330012554986	34623	5595643	RETAINER,PACKING.....	1
19	PAOZZ	5330004095291	12204	4883434AA	SEAL.....	1
20	PAOZZ	6680002690335	86403	2892399	CLAMP,PINION,SPEEDO.....	1
21	PAOZZ	5306002264824	80204	B1821BH031C063N	BOLT,MACHINE 5/16-18 X 5/8.....	1
22	PAOZZ	5315014091662	7Z588	30448-D	PIN,SHOULDER HEADLE.....	1

END OF FIGURE

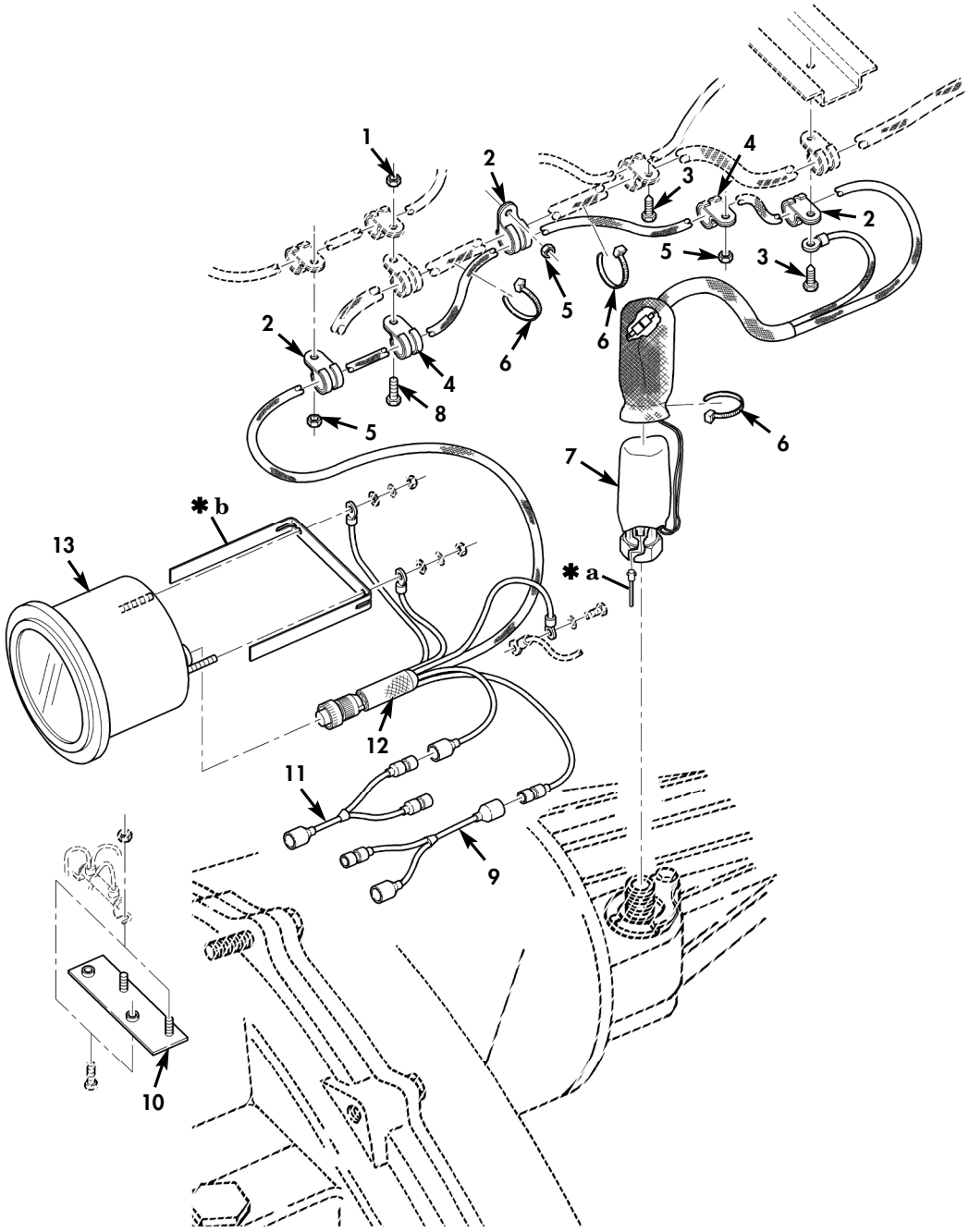

✱**a** PART OF ITEM 7
✱**b** PART OF ITEM 13

Figure 267A. Speedometer, Speedometer Drive, and Related Parts.

(1) ITEM NO	(2) SMR CODE	(3) NSN	(4) CAGEC	(5) PART NUMBER	(6) DESCRIPTION AND USABLE ON CODES(UOC)	(7) QTY
					GROUP 4701 INSTRUMENTS	
					FIG. 267A SPEEDOMETER,SPEEDOMETER DRIVE,AND RELATED PARTS	
* 1	PAOZZ	5310012699245	7X677	190254	NUT,SELF-LOCKING,HE 10-24 PART OF KIT P/N 57K4882..... UOC:TTA,TT1,UUA,UU2	1
* 2	PAOZZ	5340000797837	80205	MS21333-67	CLAMP,LOOP PART OF KIT P/N 57K4882.. UOC:TTA,TT1,UUA,UU2	3
* 3	PAOZZ	5305012645809	19207	12342499-2	SCREW,TAPPING 10-32 X 5/8 PART OF KIT P/N 57K4882..... UOC:TTA,TT1,UUA,UU2	2
* 4	PAOZZ	5340008091490	80205	MS21333-98	CLAMP,LOOP PART OF KIT P/N 57K4882.. UOC:TTA,TT1,UUA,UU2	2
* 5	PAOZZ	5310015481269	81349	M45913/4-4CG8Z	NUT,SELF-LOCKING,HE 1/4-20 PART OF KIT P/N 57K4882..... UOC:TTA,TT1,UUA,UU2	3
* 6	PAOZZ	5975009846582	96906	MS3367-1-0	STRAP,TIEDOWN,ELECT PART OF KIT P/N 57K4882..... UOC:TTA,TT1,UUA,UU2	3
* 7	PAOZZ	6115015544741	34623	12480922	GENERATOR,TACHOMETE PART OF KIT P/N 57K4882..... UOC:TTA,TT1,UUA,UU2	1
* 8	PAOZZ	5305004703321	96906	MS51849-74	SCREW,MACHINE 10-24 X 1/2 PART OF KIT P/N 57K4882..... UOC:TTA,TT1,UUA,UU2	1
* 9	PAOZZ	6150015557019	19207	12480909	CABLE ASSEMBLY,SPEC PART OF KIT P/N 57K4882..... UOC:TTA,TT1,UUA,UU2	1
* 10	PFOZZ	5340015657500	19207	12480918	PLATE,MOUNTING RESISTOR MOUNT PART OF KIT P/N 57K4882..... UOC:TTA,TT1,UUA,UU2	1
* 11	PAOZZ	6150015557025	19207	12480908	CABLE ASSEMBLY,SPEC PART OF KIT P/N 57K4882..... UOC:TTA,TT1,UUA,UU2	1
* 12	PAOZZ	6150015557011	19207	12480907	WIRING HARNESS,BRAN PART OF KIT P/N 57K4882..... UOC:TTA,TT1,UUA,UU2	1
* 13	PAOZZ	6680015544738	34623	12480921	SPEEDOMETER PART OF KIT P/N 57K4882. UOC:TTA,TT1,UUA,UU2	1

END OF FIGURE

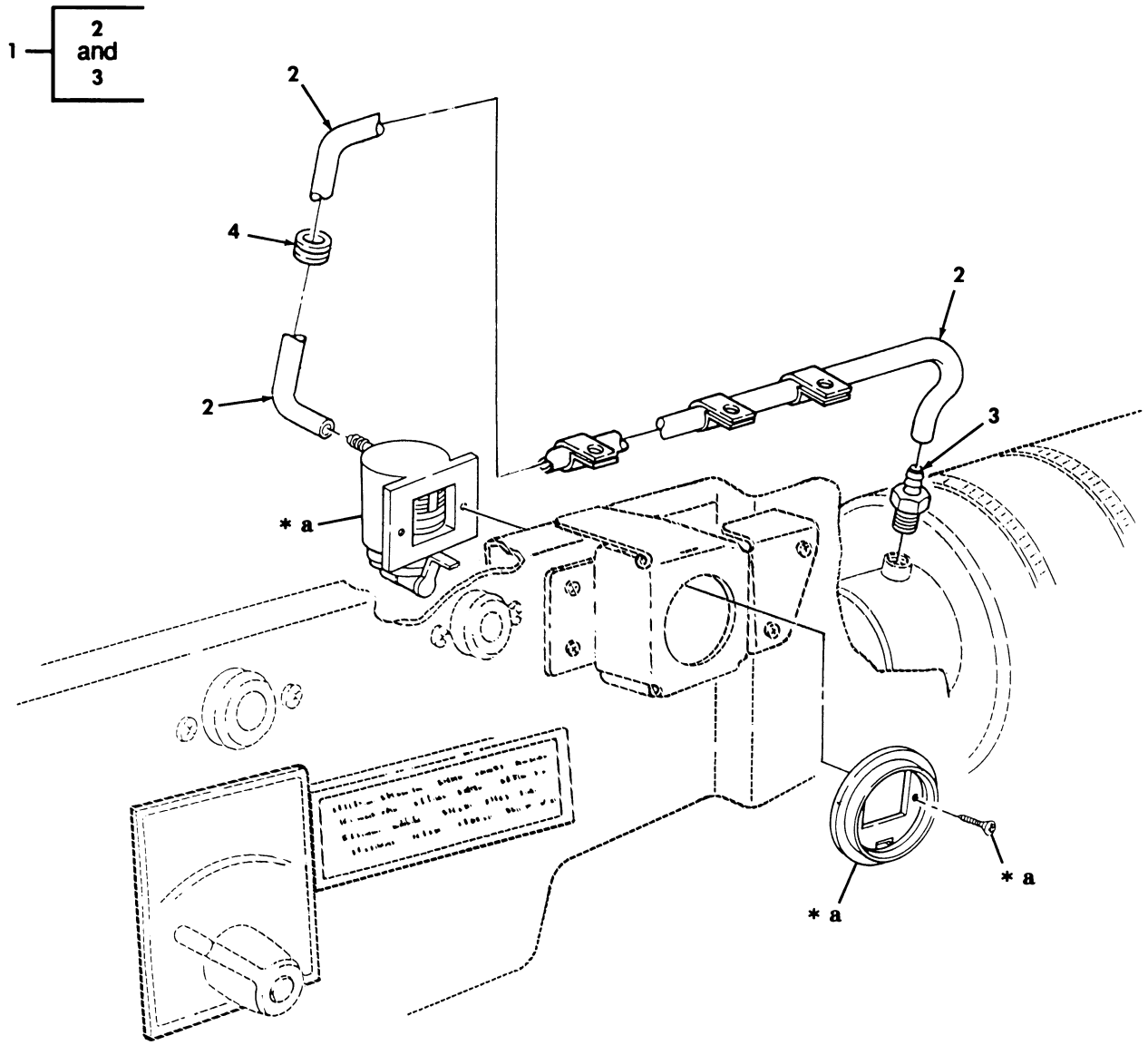

* a PART OF ITEM 1

Figure 268. Air Restriction Indicator Assembly.

(1) ITEM NO	(2) SMR CODE	(3) NSN	(4) CAGEC	(5) PART NUMBER	(6) DESCRIPTION AND USABLE ON CODES(UOC)	(7) QTY
					GROUP 4702 GAGES,MOUNTING LINES,AND FITTINGS	
					FIG. 268 AIR RESTRICTION INDICATOR ASSEMBLY	
1	PAOOO	2940011761427	59150	4755-725	INDICATOR,FILTER WA.....	1
2	MOOZZ		19207	12340078-5	.HOSE MAKE FROM HOSE, P/N 1775-826, 7.00 FEET LONG.....	1
3	PAOZZ	4730011894600	59150	1675-182	.ADAPTER,STRAIGHT,PI.....	1
4	PAOZZ	5325002766228	87585	ANA9-5	GROMMET,NONMETALLIC.....	1

END OF FIGURE

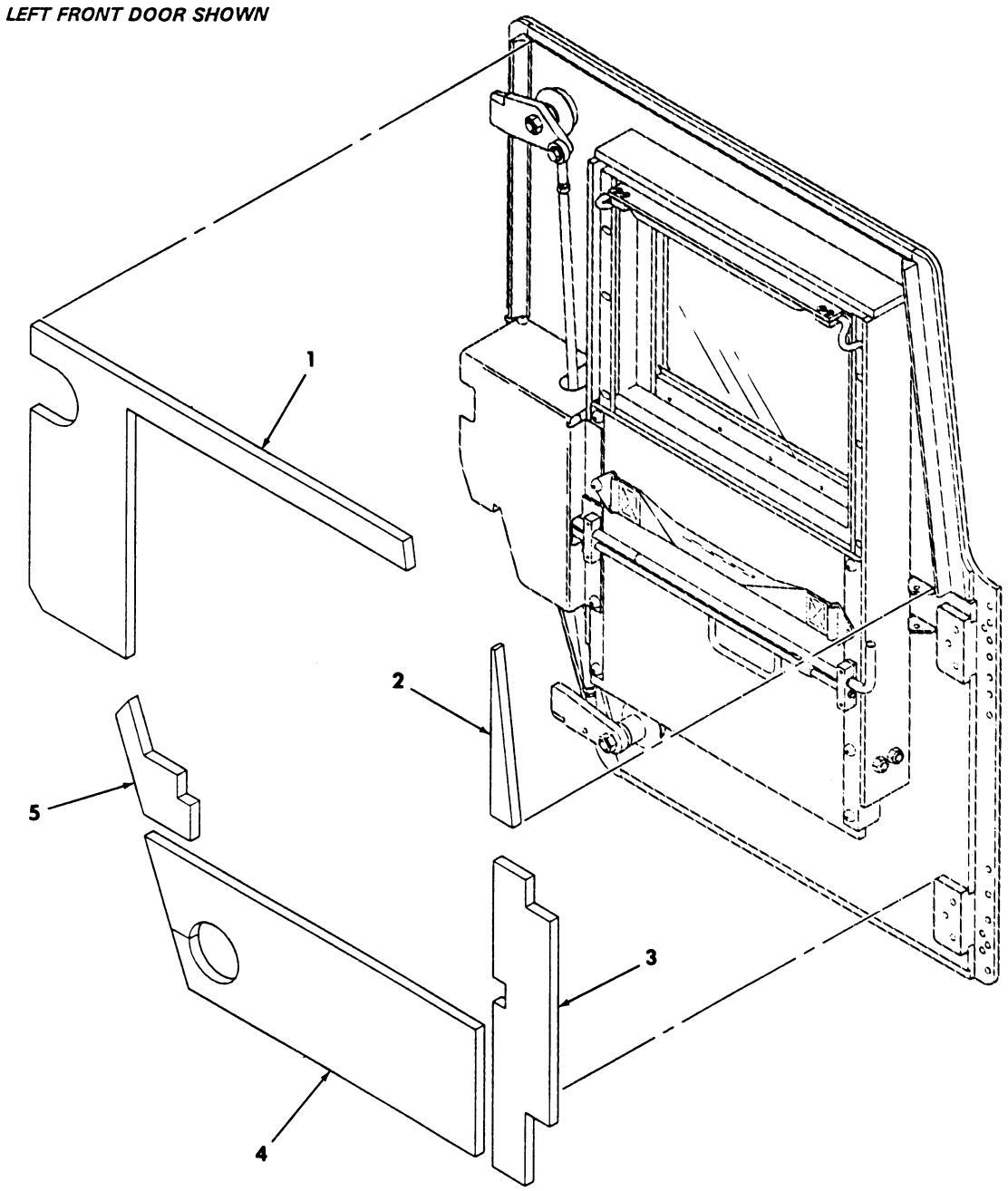

Figure 269. A/C Insulation, Front Door, Left and Right Sides.

(1) ITEM NO	(2) SMR CODE	(3) NSN	(4) CAGEC	(5) PART NUMBER	(6) DESCRIPTION AND USABLE ON CODES(UOC)	(7) QTY
					GROUP 52 REFRIGERATION,AIR CONDITIONER/HEATER,AND AIR CONDITIONING COMPONENTS	
					5203 AIR CONDITIONING COMPONENTS	
					FIG. 269 A/C INSULATION, FRONT DOOR, LEFT AND RIGHT SIDES	
1	MOOZZ		6W728	4660003-011P1	INSULATION MAKE FROM INSULATION, P/N VHTR-1-DAAC-50V, CUT TO FIT..... UOC:XBB	2
2	MOOZZ		6W728	4660003-011P2	INSULATION MAKE FROM INSULATION, P/N VHTR-1-DAAC-50V, CUT TO FIT..... UOC:XBB	2
3	MOOZZ		6W728	4660003-011P3	INSULATION MAKE FROM INSULATION, P/N VHTR-1-DAAC-50V, CUT TO FIT..... UOC:XBB	2
4	MOOZZ		6W728	4660003-011P4	INSULATION MAKE FROM INSULATION, P/N VHTR-1-DAAC-50V, CUT TO FIT..... UOC:XBB	2
5	MOOZZ		6W728	4660003-011P5	INSULATION MAKE FROM INSULATION, P/N VHTR-1-DAAC-50V, CUT TO FIT..... UOC:XBB	2

END OF FIGURE

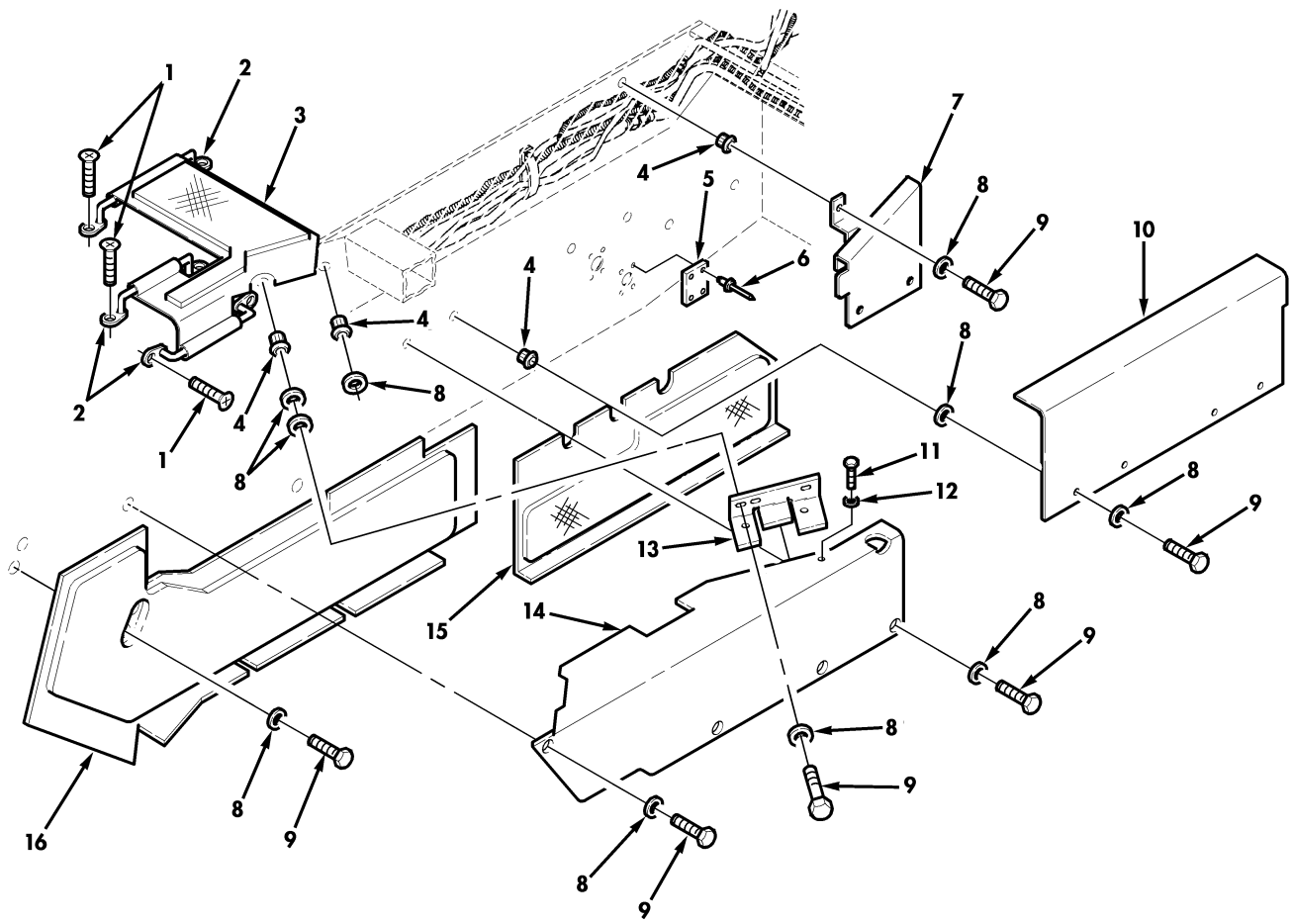

Figure 269A. HVAC Insulation, Covers, and Mounting Hardware.

(1) ITEM NO	(2) SMR CODE	(3) NSN	(4) CAGEC	(5) PART NUMBER	(6) DESCRIPTION AND USABLE ON CODES(UOC)	(7) QTY
					GROUP 52 REFRIGERATION,AIR CONDITIONER/HEATER,AND AIR CONDITIONING COMPONENTS	
					FIG. 269A HVAC INSULATION,COVERS, AND MOUNTING HARDWARE	
* 1	PAOZZ	5305014379168	6W728	4397084-020	SCREW,TAPPING..... UOC:XBB	6
* 2	PAOZZ	2590014346180	34623	RCSK17759	RETAINER,INSULATION..... UOC:XBB	3
* 3	PAOZZ	2540015002092	6W728	1000176-000	INSULATION,THERMAL..... UOC:XBB	1
* 4	PAFZZ	5325013942414	78276	ALS7-420-165	INSERT,SCREW THREA..... UOC:XBB	13
* 5	PAOZA	5340014991451	6W728	1000143-002	PLATE,MOUNTING..... UOC:XBB	2
* 6	PAOZZ		6W728	4397040-020	RIVET,BLIND..... UOC:XBB	8
* 7	PAOZA	5340014991827	6W728	1000088-002	COVER,ACCESS..... UOC:XBB	1
* 8	PAOZZ	5310014357784	6W728	4397005-010	WASHER,FLAT..... UOC:XBB	20
* 9	PAOZZ	5306014376309	6W728	4397000-006	BOLT,MACHINE..... UOC:XBB	13
* 10	PAOZZ		6W728	1000205-002	COVER,ACCESS..... UOC:XBB	1
* 11	PAOZZ	5305014998574	6W728	4397013-074	SCREW,MACHINE..... UOC:XBB	2
* 12	PAOZZ	5310014177333	6W728	4397005-008	WASHER,FLAT..... UOC:XBB	2
* 13	PAOZA	5340014991716	6W728	1000078-002	BRACKET,ANGLE..... UOC:XBB	1
* 14	PAOZA	5340014991758	6W728	1000204-002	COVER,ACCESS..... UOC:XBB	1
* 15	PAOZZ	2540015002122	6W728	1000139-000	INSULATION,THERMAL..... UOC:XBB	1
* 16	PAOZZ	2540015002113	6W728	1000138-000	INSULATION,THERMAL..... UOC:XBB	1

END OF FIGURE

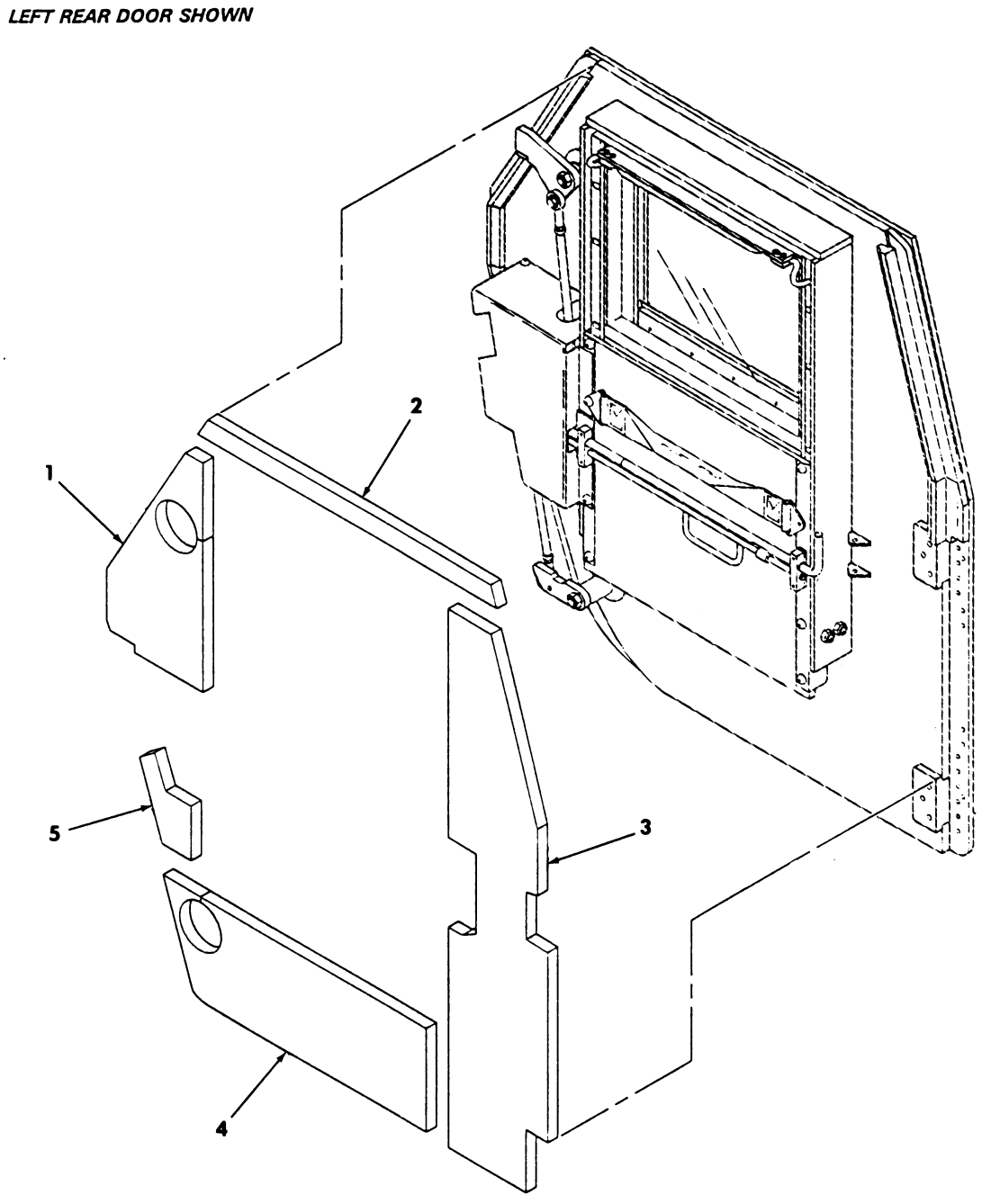

Figure 270. A/C Insulation, Rear Door, Left and Right Sides.

(1) ITEM NO	(2) SMR CODE	(3) NSN	(4) CAGEC	(5) PART NUMBER	(6) DESCRIPTION AND USABLE ON CODES(UOC)	(7) QTY
					GROUP 5203 AIR CONDITIONING COMPONENTS	
					FIG. 270 A/C INSULATION, REAR DOOR, LEFT AND RIGHT SIDES	
1	MOOZZ		6W728	4660003-012P15	INSULATION MAKE FROM INSULATION, P/N VHTR-1-DAAC-50V, CUT TO FIT..... UOC:XBB	2
2	MOOZZ		6W728	4660003-012P11	INSULATION MAKE FROM INSULATION, P/N VHTR-1-DAAC-50V, CUT TO FIT..... UOC:XBB	2
3	MOOZZ		6W728	4660003-012P12	INSULATION MAKE FROM INSULATION, P/N VHTR-1-DAAC-50V, CUT TO FIT..... UOC:XBB	2
4	MOOZZ		6W728	4660003-012P13	INSULATION MAKE FROM INSULATION, P/N VHTR-1-DAAC-50V, CUT TO FIT..... UOC:XBB	2
5	MOOZZ		6W728	4660003-012P14	INSULATION MAKE FROM INSULATION, P/N VHTR-1-DAAC-50V, CUT TO FIT..... UOC:XBB	2

END OF FIGURE

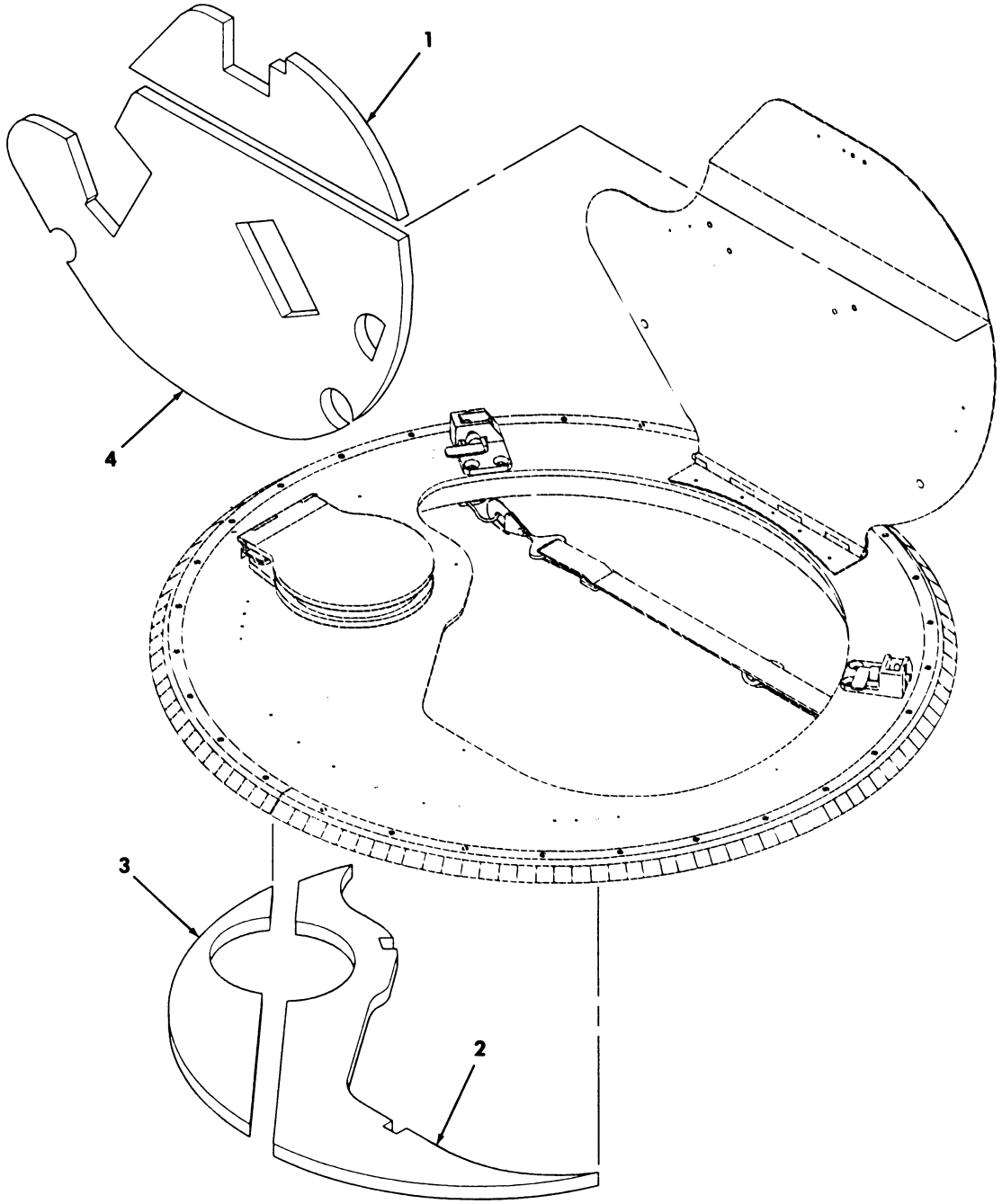

Figure 271. A/C Insulation, Turret.

(1) ITEM NO	(2) SMR CODE	(3) NSN	(4) CAGEC	(5) PART NUMBER	(6) DESCRIPTION AND USABLE ON CODES(UOC)	(7) QTY
					GROUP 5203 AIR CONDITIONING COMPONENTS	
					FIG. 271 A/C INSULATION, TURRET	
1	MOOZZ		6W728	4660003-010P32	INSULATION MAKE FROM INSULATION, P/N VHTR-1-DAAC-50V, CUT TO FIT..... UOC:XBB	1
2	MOOZZ		6W728	4660003-010P35	INSULATION MAKE FROM INSULATION, P/N VHTR-1-DAAC-50V, CUT TO FIT..... UOC:XBB	1
3	MOOZZ		6W728	4660003-010P33	INSULATION MAKE FROM INSULATION, P/N VHTR-1-DAAC-50V, CUT TO FIT..... UOC:XBB	1
4	MOOZZ		6W728	4660003-010P34	INSULATION MAKE FROM INSULATION, P/N VHTR-1-DAAC-50V, CUT TO FIT..... UOC:XBB	1

END OF FIGURE

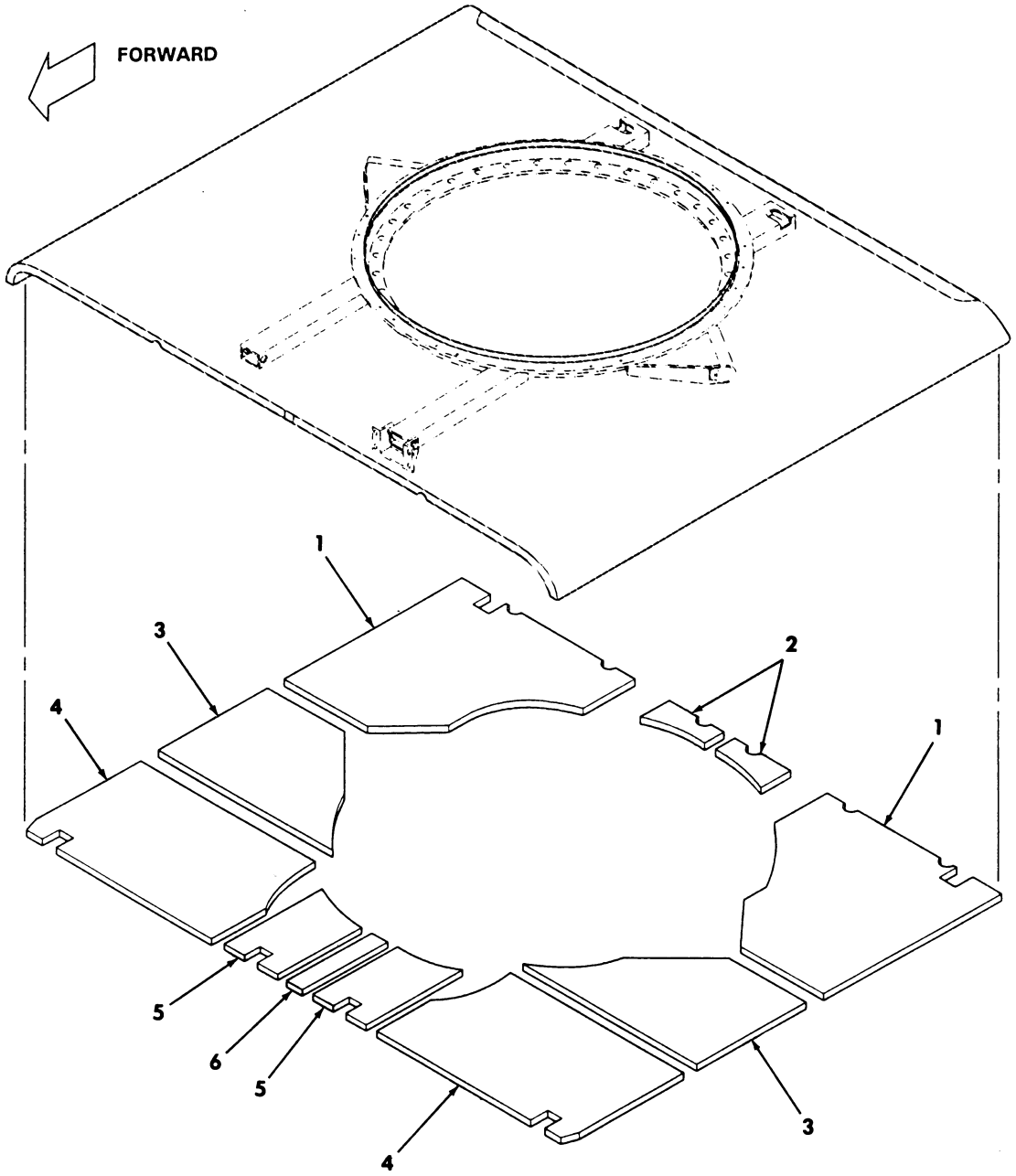

Figure 272. A/C Insulation, Roof.

(1) ITEM NO	(2) SMR CODE	(3) NSN	(4) CAGEC	(5) PART NUMBER	(6) DESCRIPTION AND USABLE ON CODES(UOC)	(7) QTY
					GROUP 5203 AIR CONDITIONING COMPONENTS	
					FIG. 272 A/C INSULATION, ROOF	
1	MOOZZ		6W728	4660003-013P24	INSULATION REAR,L.H. AND R.H., MAKE FROM INSULATION, P/N VHTR-1-DAAC-50V, CUT TO FIT..... UOC:XBB	2
2	MOOZZ		6W728	4660003-013P26	INSULATION REAR, MAKE FROM INSULATION, P/N VHTR-1-DAAC-50V, CUT TO FIT..... UOC:XBB	2
3	MOOZZ		6W728	4660003-013P23	INSULATION FRONT,L.H. AND R.H., MAKE FROM INSULATION, P/N VHTR-1-DAAC-50V, CUT TO FIT..... UOC:XBB	2
4	MOOZZ		6W728	4660003-013P22	INSULATION FRONT,L.H. AND R.H., MAKE FROM INSULATION, P/N VHTR-1-DAAC-50V, CUT TO FIT..... UOC:XBB	2
5	MOOZZ		6W728	4660003-013P25	INSULATION FRONT, MAKE FROM INSULATION, P/N VHTR-1-DAAC-50V, CUT TO FIT..... UOC:XBB	2
6	MOOZZ		6W728	4660003-013P21	INSULATION FRONT, MAKE FROM INSULATION, P/N VHTR-1-DAAC-50V, CUT TO FIT..... UOC:XBB	1

END OF FIGURE

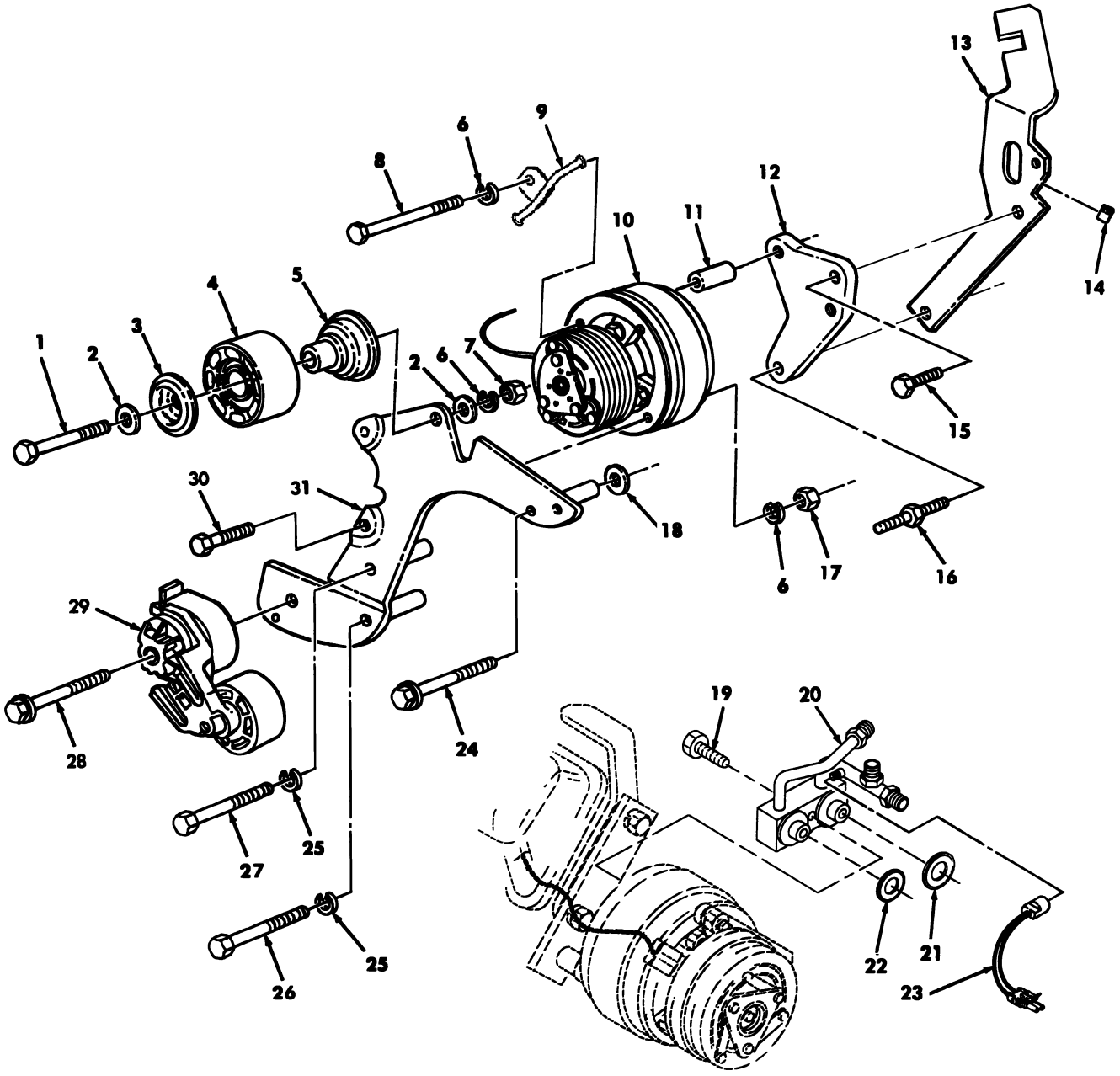

Figure 273. A/C Compressor, Idler Pulley, Tensioner, and Mounting Hardware (Serial Number 196900 and Below).

(1) ITEM NO	(2) SMR CODE	(3) NSN	(4) CAGEC	(5) PART NUMBER	(6) DESCRIPTION AND USABLE ON CODES(UOC)	(7) QTY
					GROUP 5203 AIR CONDITIONING COMPONENTS	
					FIG. 273 A/C COMPRESSOR,IDLER PULLEY,TENSIONER,AND MOUNTING HARDWARE (SERIAL NUMBER 196900 AND BELOW)	
1	PAFZZ	5305000712074	80204	B1821BH050C275N	SCREW,CAP HEXAGON H 1/2-13 X 2.75.. UOC:XBB	2
* 2	PAFZZ	5310008095998	96906	MS27183-18	WASHER,FLAT 1/2..... UOC:XBB	4
3	PAFZZ	3020014580185	34623	RCSK18627	COVER,IDLER PULLEY..... UOC:XBB	2
4	PAFZZ	3020014521202	34623	RCSK18628	PULLEY,FLAT..... UOC:XBB	2
5	PAFZZ	3020014580176	19207	12469108	SPACER,IDLER PULLEY..... UOC:XBB	2
* 6	PAFZZ	5310006379541	80205	MS35338-46	WASHER,LOCK 3/8..... UOC:XBB	4
7	PAFZZ	5310014654525	24617	9418753	NUT,PLAIN,HEXAGON 1/2-13..... UOC:XBB	2
* 8	PAFZZ	5305014392123	80204	B1821BH038C675N	SCREW,CAP HEXAGON H 3/8-16 X 6.75.. UOC:XBB	1
* 9	PAFZZ	5970015233417	6W728	1000081	INSULATION SLEEVING..... UOC:XBB	1
* 10	PAFZZ	4310014208306	34623	RCSK17567	COMPRESSOR,REFRIGER..... UOC:XBB	1
* 11	PAFZZ	5365014336267	34623	RCSK17903	SPACER,SLEEVE..... UOC:XBB	1
* 12	PAFZZ	5340014810558	19207	12469107	BRACKET,MOUNTING..... UOC:XBB	1
* 13	PAFZZ	5342014332737	19207	12469187	BRACKET,MOUNTING..... UOC:XBB	1
* 14	PAOZZ		19207	12339902-14	PAD,CUSHIONING..... UOC:XBB	1
* 15	PAFZZ	5306012705448	19207	12340845-3	BOLT,MACHINE..... UOC:XBB	1
* 16	PAFZZ	5307014084029	19207	12342545	STUD,SHOULDERED..... UOC:XBB	1
* 17	PAFZZ	5310007610654	96906	MS51967-9	NUT,PLAIN,HEXAGON..... UOC:XBB	3
* 18	PAFZZ	5310014804161	34623	5934761	WASHER,SHOULDERED..... UOC:XBB	1
* 19	PAFZZ	5306014206034	6W728	22-00005	BOLT,MACHINE..... UOC:XBB	1
* 20	PAFZZ	4130014590475	6W728	35-02005	MANIFOLD,CHARGING A..... UOC:XBB	1
* 21	PAFZZ	5310014195091	6W728	33-00822	WASHER,SEAL..... UOC:XBB	1
* 21	PAFZZ	5310014204522	6W728	33-00811	WASHER,FLAT..... UOC:XBB	1

(1) ITEM NO	(2) SMR CODE	(3) NSN	(4) CAGEC	(5) PART NUMBER	(6) DESCRIPTION AND USABLE ON CODES(UOC)	(7) QTY
* 22	PAFZZ	5930014727762	6W728	11-00576	SWITCH,PRESSURE..... UOC:XBB	1
* 23	PAFZZ	5306014731895	24617	11501619	BOLT,MACHINE..... UOC:XBB	1
* 24	PAFZZ	5310012067306	7X677	11500207	WASHER,LOCK..... UOC:XBB	2
* 25	PAFZZ	5306014327900	24617	11504617	BOLT,MACHINE..... UOC:XBB	1
* 26	PAFZZ	5306017447900	24617	11504594	BOLT,MACHINE..... UOC:XBB	1
* 27	PAFZZ	5305013601136	73342	11505328	SCREW,CAP HEXAGON H..... UOC:XBB	1
* 28	PAFZZ	5305007813927	80204	B1821BH038C350N	SCREW,CAP,HEXAGON H 3/8-16 X 3.50.. UOC:XBB	1
* 29	PAFZZ	2920014207894	15434	3802287	ARM,ADJUSTING,BELT..... UOC:XBB	1
* 30	PAFZZ	5306013601130	24617	456958	BOLT,MACHINE..... UOC:XBB	2
* 31	PAFZZ	2590014445046	34623	RCSK18278-7	BRACKET,VEHICULAR C IDLER PULLEY... UOC:XBB	1

END OF FIGURE

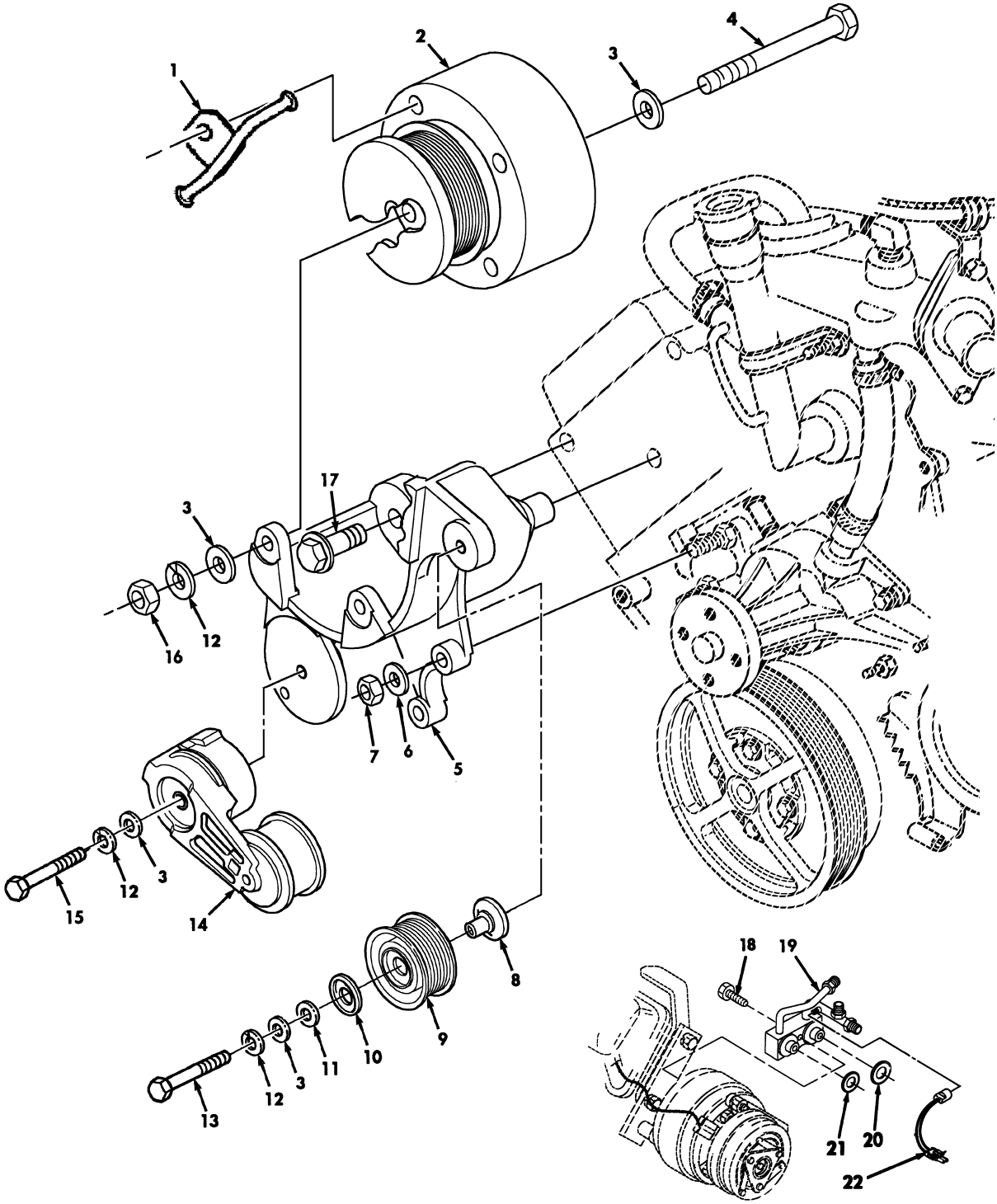

Figure 273A. A/C Compressor, Idler Pulley, Tensioner, and Related Parts (Serial Number 196901 and Above).

(1) ITEM NO	(2) SMR CODE	(3) NSN	(4) CAGEC	(5) PART NUMBER	(6) DESCRIPTION AND USABLE ON CODES(UOC)	(7) QTY
					GROUP 5203 AIR CONDITIONING COMPONENTS	
					FIG. 273A A/C COMPRESSOR IDLER PULLEY, TENSIONER AND RELATED PARTS (SERIAL NUMBER 196901 AND ABOVE)	
* 1	PAFZZ	5970015263417	6W728	1000081	INSULATION,SLEEVING..... UOC:XBB	1
2	PAOZZ	4310014208306	34623	RCSK17567	COMPRESSOR,AIR COND..... UOC:XBB	1
3	PAOZZ	5310014124013	24617	2436163	WASHER,FLAT 3/8..... UOC:XBB	8
4	PAOZZ	5305007813929	80204	B1821BH038C425N	SCREW,CAP,HEXAGON H 3/8-16 X 4.25.. UOC:XBB	3
5	PAOZZ	5340014886181	34623	12469498	BRACKET..... UOC:XBB	1
6	PAOZZ	5310012067306	7X677	11500207	WASHER,LOCK..... UOC:XBB	2
7	PAOZZ	5310013958747	80204	B18241B100F	NUT,PLAIN HEXAGON M10-1.5..... UOC:XBB	2
8	PAOZZ	5365014885640	34623	12469473	SPACER,STEPPED..... UOC:XBB	1
9	PAOZZ	3020014910776	001Y9	600635	PULLEY,GROOVE..... UOC:XBB	1
10	PAOZZ	5340014912205	001Y9	600638	BOOT,DUST AND MOIST..... UOC:XBB	1
11	PAOZZ	5310000120388	24617	120388	WASHER,FLAT..... UOC:XBB	1
12	PAOZZ	5310006379541	80205	MS35338-46	WASHER,LOCK 3/8..... UOC;XBB	2
13	PAOZZ	5305005432866	80204	B1821BH038C250N	SCREW,CAP,HEXAGON H 3/8-16 X 2.50.. UOC:XBB	1
14	PAOZZ	2920014912011	001Y9	600637	ARM,ADJUSTING..... UOC:XBB	1
15	PAOZZ	5305007813927	80204	B1821BH038C350N	SCREW,CAP,HEXAGON H 3/8-16 X 3.50.. UOC:XBB	1
16	PAOZZ	5310007320558	72582	123221	NUT,PLAIN,HEXAGON..... UOC:XBB	3
17	PAOZZ	5306012705448	19207	12340845-3	BOLT,MACHINE M10-1.5 X 45 MM..... UOC:XBB	2
18	PAFZZ	5306014206034	6W728	22-00005	BOLT,MACHINE..... UOC:XBB	1
19	PAFZZ	4130014590475	6W728	35-02005	MANIFOLD,CHARGING..... UOC:XBB	1
20	PAFZZ	5310014195091	6W728	33-00822	WASHER,SEAL..... UOC:XBB	1
21	PAFZZ	5310014204522	6W728	33-00811	WASHER,FLAT..... UOC:XBB	1
22	PAFZZ	5930014727762	6W728	11-00576	SWITCH,PRESSURE..... UOC:XBB	1

END OF FIGURE

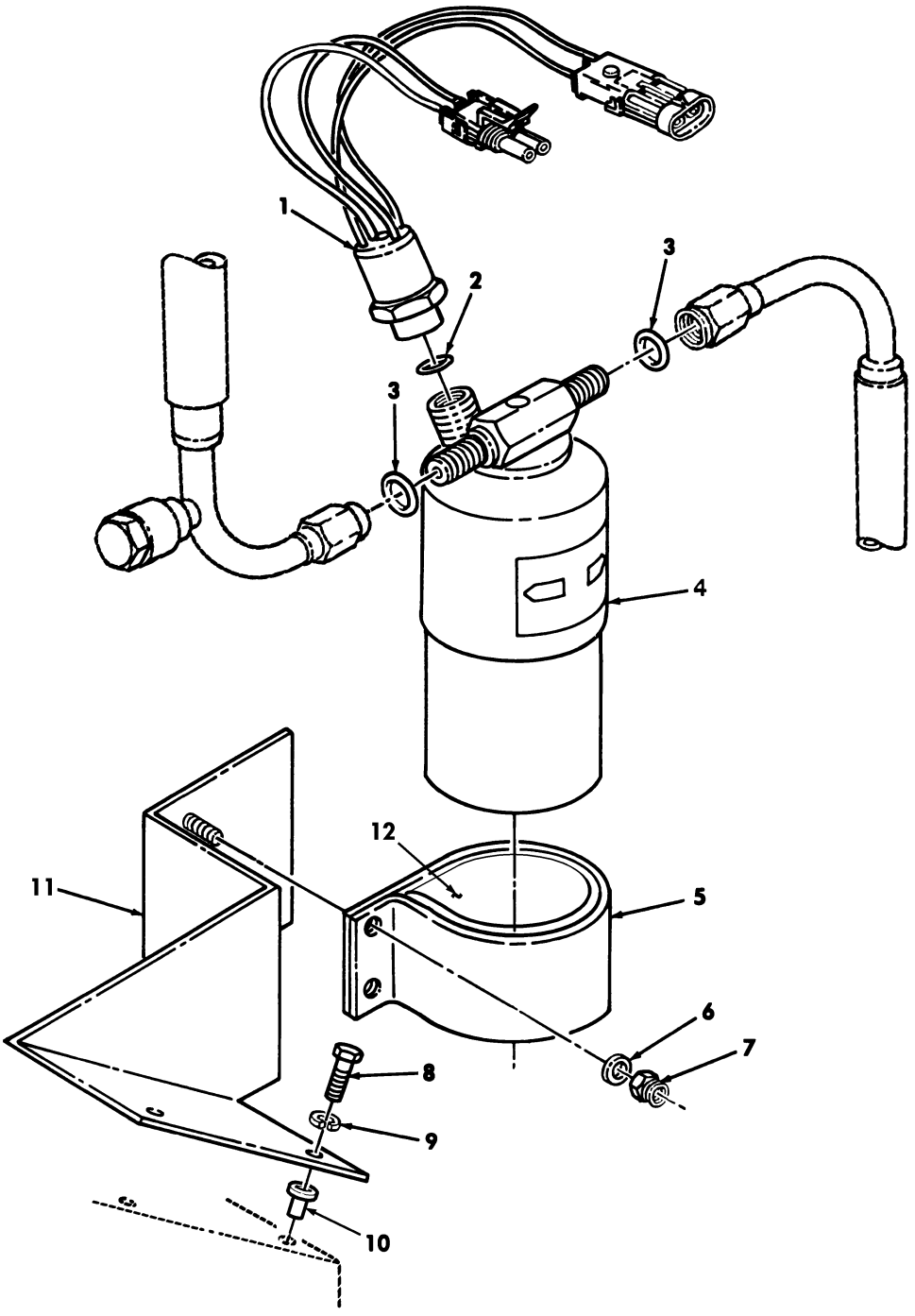

Figure 274. Dryer Assembly, Trinary Switch, and Related Parts.

(1) ITEM NO	(2) SMR CODE	(3) NSN	(4) CAGEC	(5) PART NUMBER	(6) DESCRIPTION AND USABLE ON CODES(UOC)	(7) QTY
					GROUP 5203 AIR CONDITIONING COMPONENTS	
					FIG. 274 DRYER ASSEMBLY, TRINARY SWITCH, AND RELATED PARTS	
* 1	PAFZZ	5930015210167	6W728	11-00623	SWICTH,PRESSURE..... UOC:XBB	1
2	PAFZZ	5330014602442	6W728	33-00779	O-RING..... UOC:XBB	1
3	PAFZZ	5331014197754	6W728	33-00778	O-RING #6..... UOC:XBB	2
* 4	PAFZZ	4130015126676	6W728	07-00453	RECEIVER,LIQUID REF..... UOC:XBB	1
5	PAFZZ	5340014205376	6W728	55-01996	CLAMP,LOOP REAR..... UOC:XBB	1
6	PAFZZ	5310014655111	6W728	93-00004	WASHER,FLAT..... UOC:XBB	2
7	PAFZZ	5310014208727	6W728	92-00065	NUT,SELF-LOCKING,HE..... UOC:XBB	2
8	PAFZZ	5305014366379	6W728	4397000-008	SCREW,CAP,HEXAGON H..... UOC:XBB	2
9	PAFZZ	5310014357784	6W728	4397005-010	WASHER,FLAT..... UOC:XBB	2
* 10	PAFZZ	5310015212135	6W728	4397050-025	NUT,PLAIN,BLIND RIV 1/4-20..... UOC:XBB	2
11	PAFZZ	2510014599496	6W728	55-04054	BRACKET,AIR DRYER RECEIVER/DRYER... UOC:XBB	1
* 12	PAFZZ	5330015172180	6W728	21-00636	STRIP,RUBBER..... UOC:XBB	1

END OF FIGURE

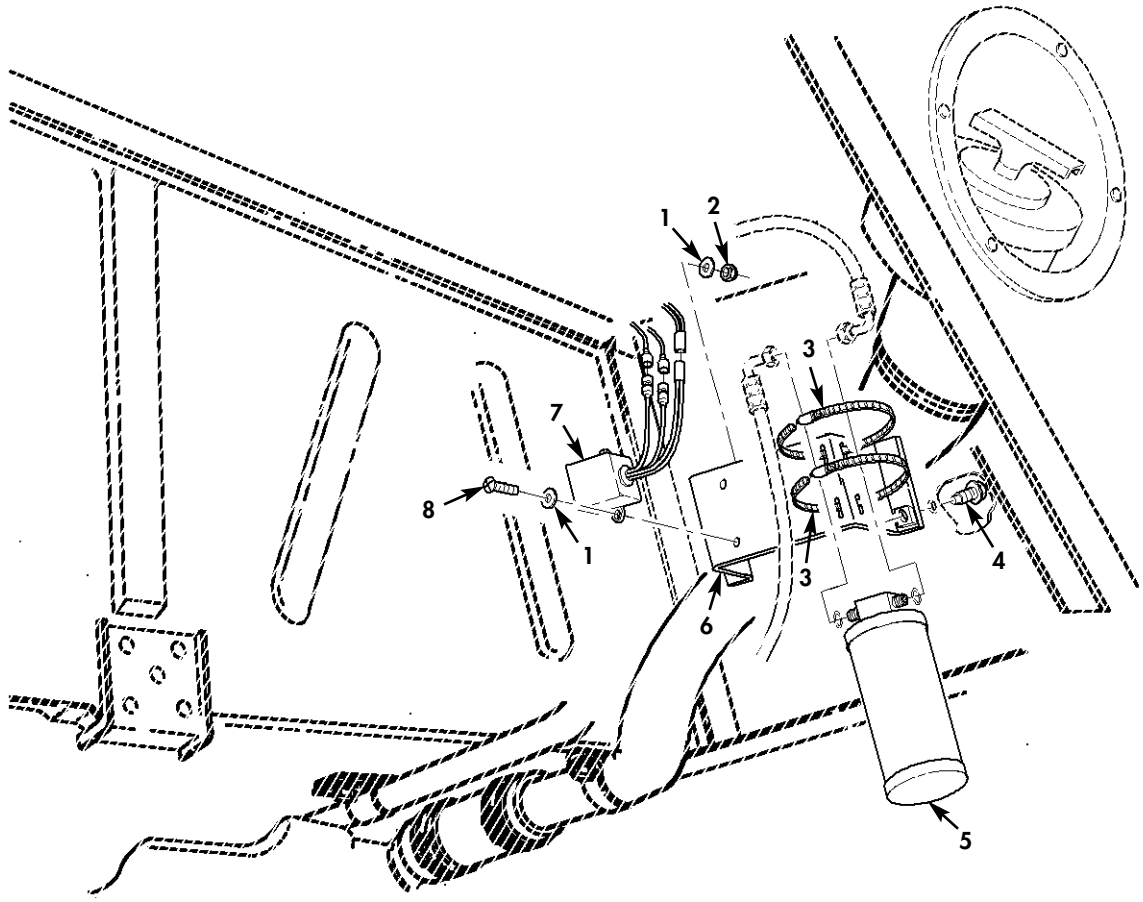

Figure 274A. Rear Receiver/Dryer.

(1) ITEM NO	(2) SMR CODE	(3) NSN	(4) CAGEC	(5) PART NUMBER	(6) DESCRIPTION AND USABLE ON CODES(UOC)	(7) QTY
					GROUP 5203 AIR CONDITIONING COMPONENTS	
					FIG. 274A REAR RECEIVER/DRYER	
* 1	PAOZZ	5310012349416	96906	MS51412-2	WASHER,FLAT #10..... UOC:TTA,TTT,TT1,UUA,UUU,UU1,UU2	2
* 2	PAOZZ	5340015134903	6W728	4397020-023	NUT,SELF-LOCKING #10-32..... UOC:TTA,TTT,TT1,UUA,UUU,UU1,UU2	2
* 3	PAOZZ	4730009098627	34623	5583303	CLAMP,HOSE..... UOC:TTA,TTT,TT1,UUA,UUU,UU1,UU2	2
* 4	PAOZZ	5305015394101	34623	6015663	SCREW,MACHINE..... UOC:TTA,TTT,TT1,UUA,UUU,UU1,UU2	4
* 5	PAOZZ		34623	6029035	FILTER-DRIER,REFRIG..... UOC:TTA,TTT,TT1,UUA,UUU,UU1,UU2	1
* 6	PAOZZ	5340015374713	34623	6015466	BRACKET,MOUNTING..... UOC:TTA,TTT,TT1,UUA,UUU,UU1,UU2	1
* 7	PAOZZ	5945015366091	34623	6013654	RELAY,SOLID STATE 24V..... UOC:TTA,TTT,TT1,UUA,UUU,UU1,UU2	1
* 8	PAOZZ	5305000509228	96906	MS51957-62	SCREW,MACHINE #10-32 X 1.00..... UOC:TTA,TTT,TT1,UUA,UUU,UU1,UU2	2

END OF FIGURE

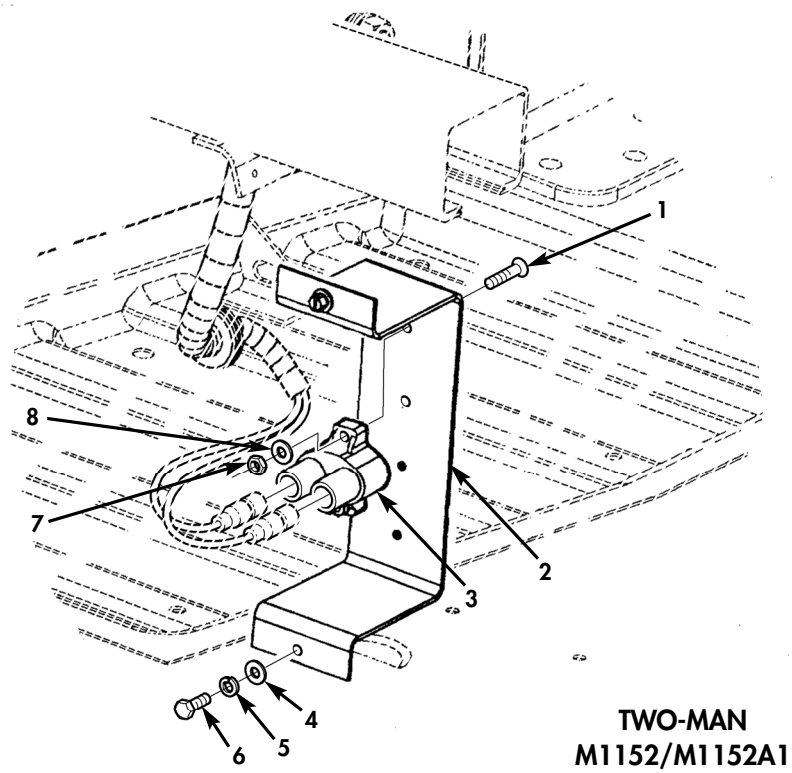

TWO-MAN
M1152/M1152A1

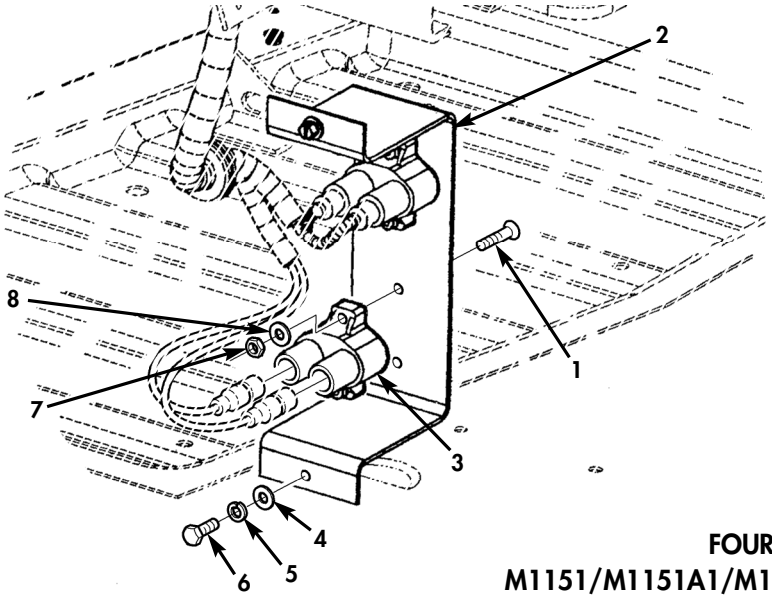

FOUR-MAN
M1151/M1151A1/M1165/M1165A1/M1167

Figure 274B. A/C System Circuit Breakers.

(1) ITEM NO	(2) SMR CODE	(3) NSN	(4) CAGEC	(5) PART NUMBER	(6) DESCRIPTION AND USABLE ON CODES(UOC)	(7) QTY
					GROUP 5203 AIR CONDITIONING COMPONENTS	
					FIG. 274B A/C SYSTEM CIRCUIT BREAKERS	
* 1	PAOZZ	5305009836195	80205	MS35206-247	SCREW,MACHINE #10-32 X .719..... UOC:TTA,TTT,TT1,UUA,UUU,UU1,UU2	2
* 2	PAOZZ	5340015364120	34623	6019842	BRACKET,DOUBLE AN CIRCUIT BREAKER.. UOC:TTA,TTT,TT1,UUA,UUU,UU1,UU2	1
* 3	PAOZZ	5925003331584	58536	AA55571/01-004	CIRCUIT BREAKER 30 AMP..... UOC:TTA,TTT,TT1,UUA,UUU,UU1,UU2	1
* 4	PAOZZ	5310012349416	96906	MS51412-2	WASHER,FLAT #10..... UOC:TTA,TTT,TT1,UUA,UUU,UU1,UU2	2
* 5	PAOZZ	5310000453296	80205	MS35338-43	WASHER,LOCK #10..... UOC:TTA,TTT,TT1,UUA,UUU,UU1,UU2	2
* 6	PAOZZ	5305002400194	96906	MS51849-76	BOLT,MACHINE #10-24 X .720..... UOC:TTA,TTT,TT1,UUA,UUU,UU1,UU2	2
* 7	PAOZZ	5310010695243	72582	271163	NUT,PLAIN ASSEMBLED #10-32..... UOC:TTA,TTT,TT1,UUA,UUU,UU1,UU2	2
* 8	PAOZZ	5310008098546	96906	MS27183-8	WASHER,FLAT #10..... UOC:TTA,TTT,TT1,UUA,UUU,UU1,UU2	2

END OF FIGURE

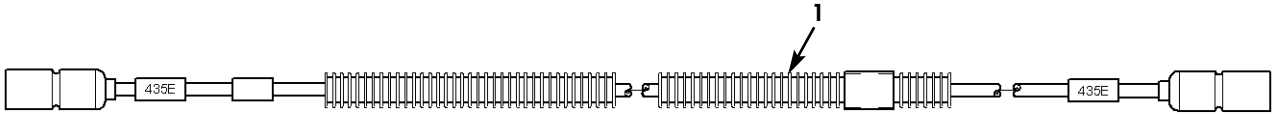

Figure 274C. A/C Wiring Harness, Switch Jumper.

(1) ITEM NO	(2) SMR CODE	(3) NSN	(4) CAGEC	(5) PART NUMBER	(6) DESCRIPTION AND USABLE ON CODES(UOC)	(7) QTY
					GROUP 5203 AIR CONDITIONING COMPONENTS	
					FIG. 274C A/C WIRING HARNESS,SWITCH JUMPER	
* 1	PAOZZ	6150015397293	34623	6019677	CABLE ASSEMBLY,SPEC..... UOC:TTA,TTT,TT1,UUA,UUU,UU1,UU2	1

END OF FIGURE

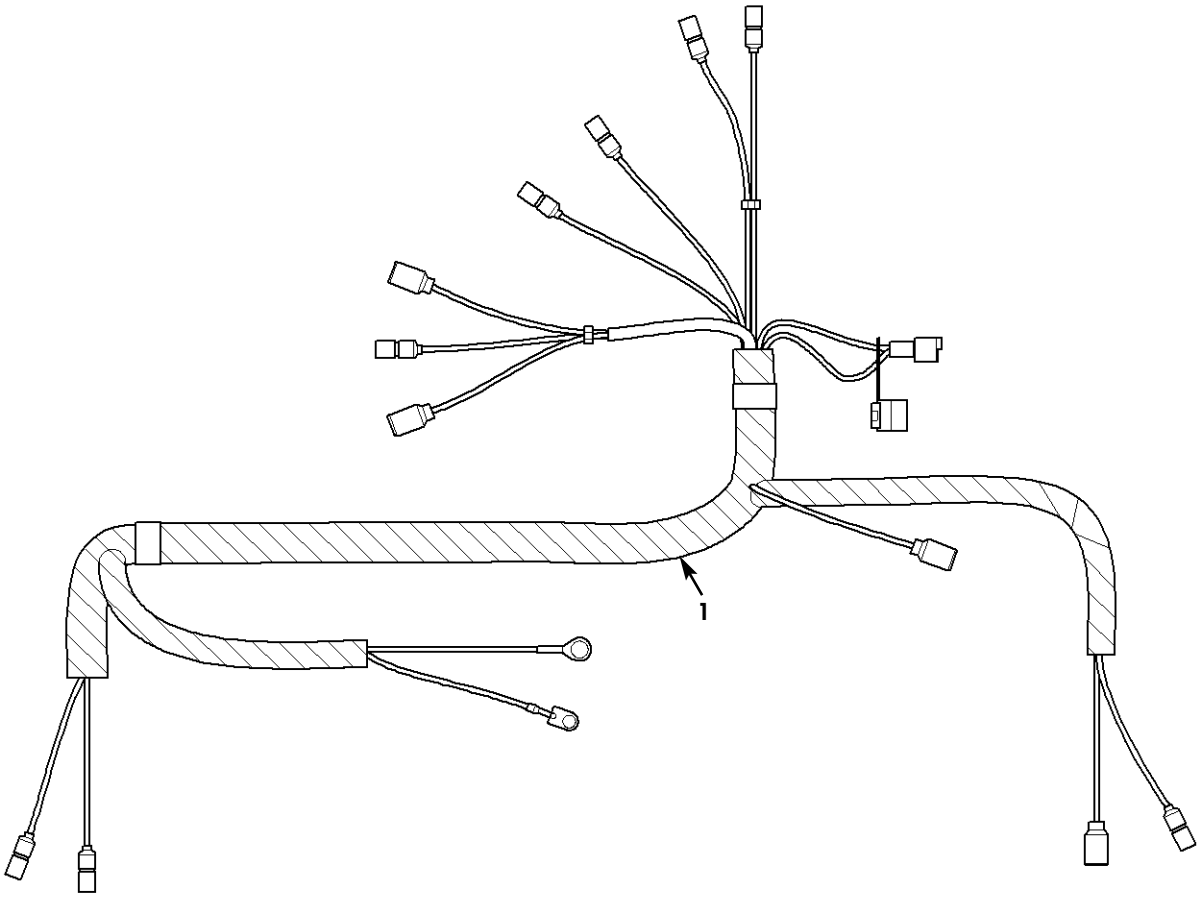

Figure 274D. A/C Wiring Harness (2-Man A/C System).

(1) ITEM NO	(2) SMR CODE	(3) NSN	(4) CAGEC	(5) PART NUMBER	(6) DESCRIPTION AND USABLE ON CODES(UOC)	(7) QTY
					GROUP 5203 AIR CONDITIONING COMPONENTS	
					FIG. 274D A/C WIRING HARNESS (2-MAN A/C SYSTEM)	
* 1	PAOZZ	4710013442035	3B150	6022739	WIRING HARNESS,BRAN 2-MAN A/C SYSTEM UOC:UUA,UUU	1

END OF FIGURE

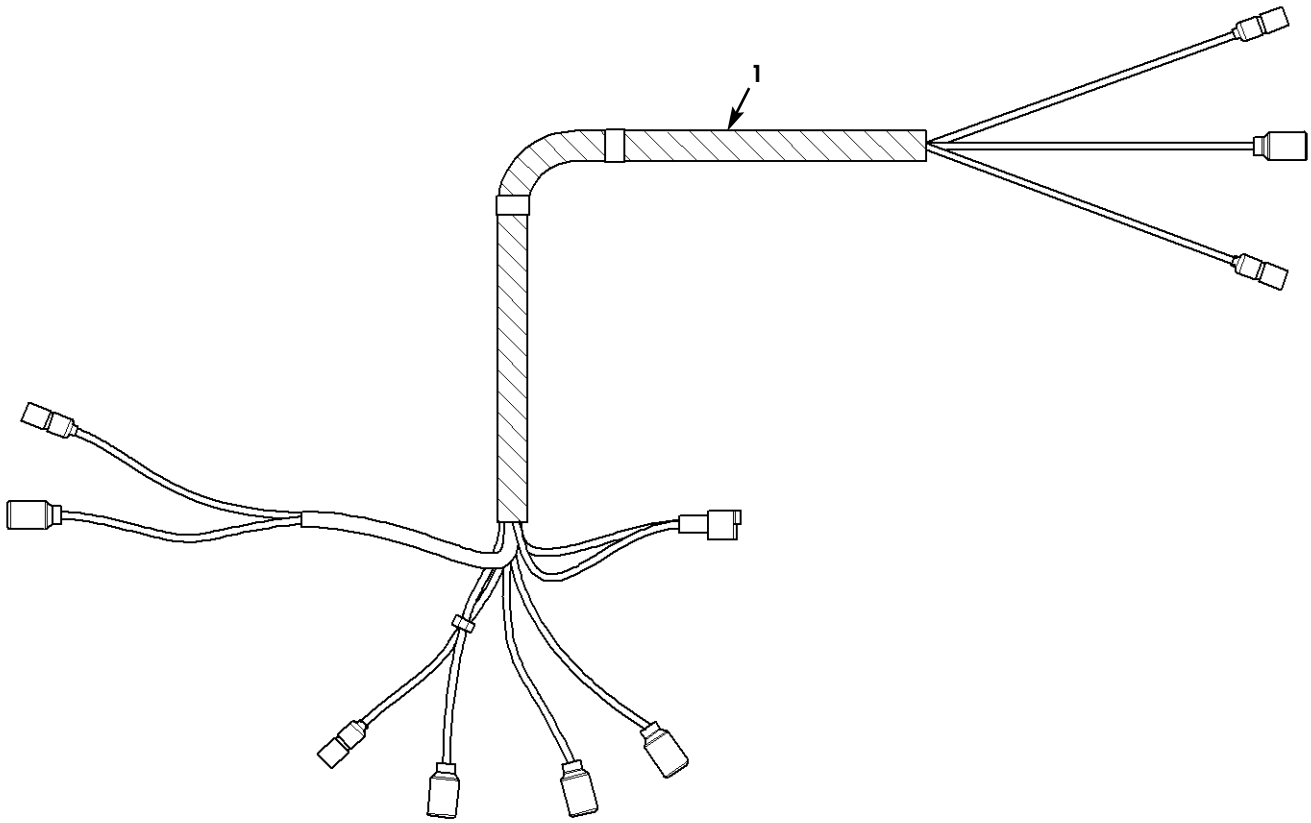

Figure 274E. A/C Wiring Harness (2-Man Condenser Fans).

(1) ITEM NO	(2) SMR CODE	(3) NSN	(4) CAGEC	(5) PART NUMBER	(6) DESCRIPTION AND USABLE ON CODES(UOC)	(7) QTY
					GROUP 5203 AIR CONDITIONING COMPONENTS	
					FIG. 274E A/C WIRING HARNESS (2-MAN CONDENSER FANS)	
* 1	PAOZZ	6150015603036	34623	6034016	WIRING HARNESS,BRAN..... UOC:UUA,UUU	1

END OF FIGURE

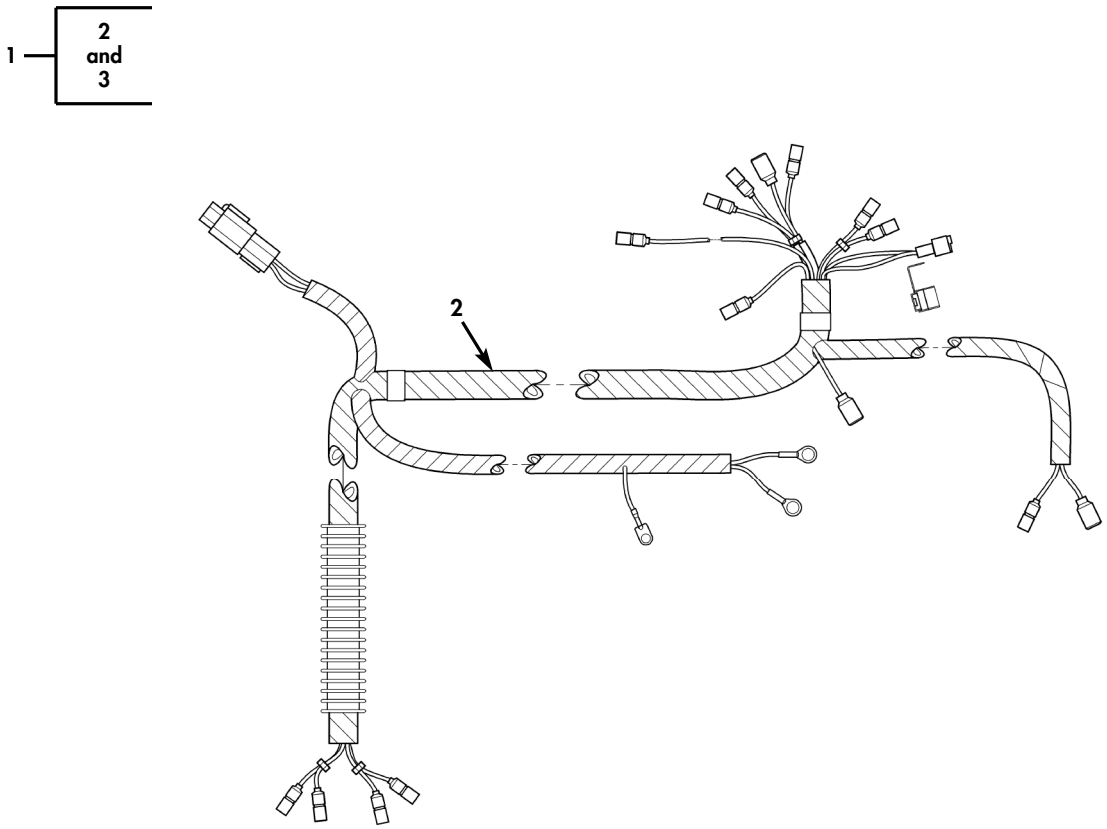

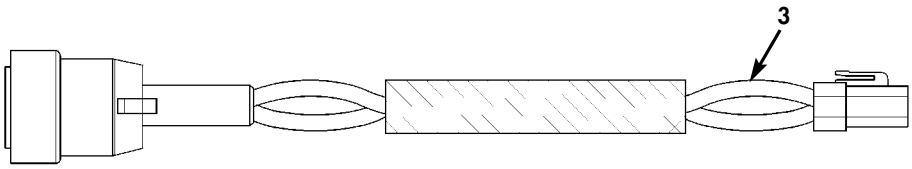

Figure 274F. A/C Airing Harness (4-Man A/C System).

(1) ITEM NO	(2) SMR CODE	(3) NSN	(4) CAGEC	(5) PART NUMBER	(6) DESCRIPTION AND USABLE ON CODES(UOC)	(7) QTY
					GROUP 5203 AIR CONDITIONING COMPONENTS	
					FIG. 274F A/C WIRING HARNESS (4-MAN A/C SYSTEM)	
* 1	PAOZZ	6150015397270	34623	5716948	WIRING HARNESS,BRAN..... UOC:TTA,TTT,TT1,UU1,UU2	1
* 2	PAOZZ	4710013442035	34623	6022739	.WIRING HARNESS,BRAN..... UOC:TTA,TTT,TT1,UU1,UU2	1
* 3	PAOZZ		34623	6022740	.WIRING HARNESS, BRAN..... UOC:TTA,TTT,TT1,UU1,UU2	1
					END OF FIGURE	

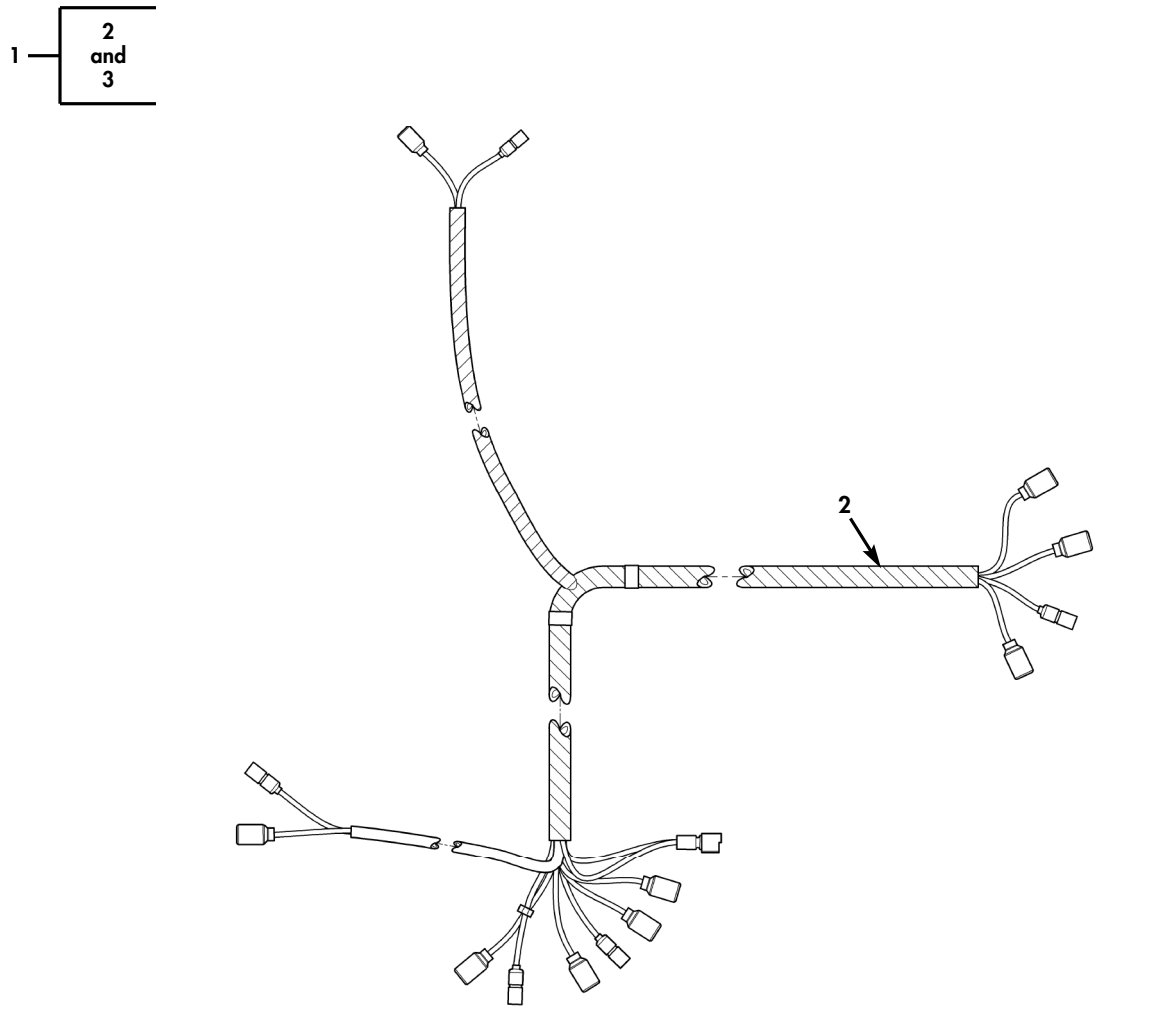

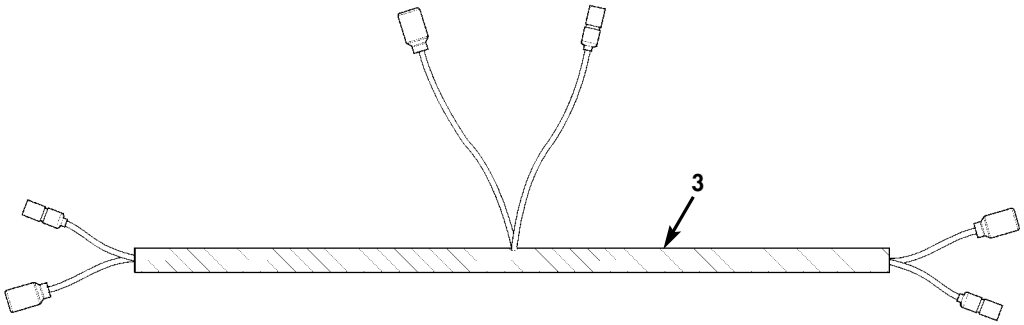

Figure 274G. A/C Wiring Harness (4-Man Condenser Fans).

(1) ITEM NO	(2) SMR CODE	(3) NSN	(4) CAGEC	(5) PART NUMBER	(6) DESCRIPTION AND USABLE ON CODES(UOC)	(7) QTY
					GROUP 5203 AIR CONDITIONING COMPONENTS	
					FIG. 274G A/C WIRING HARNESS (4-MAN CONDENSER FANS)	
* 1	PAOZZ	6150015397287	34623	5717030	WIRING HARNESS,BRAN..... UOC:TTA,TTT,TT1,UU1,UU2	1
* 2	PAOZZ	6150015603036	34623	6034016	.WIRING HARNESS,BRAN..... UOC:TTA,TTT,TT1,UU1,UU2	1
* 3	PAOZZ	6150015486007	34623	6022747	.WIRING HARNESS,BRAN..... UOC:TTA,TTT,TT1,UU1,UU2	1
					END OF FIGURE	

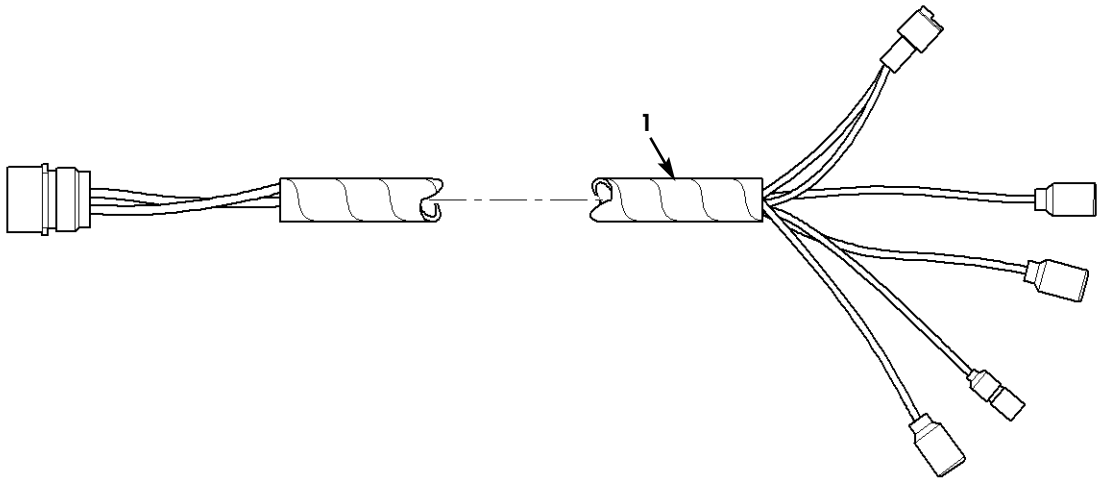

Figure 274H. A/C Wiring Harness (Rear Blower Motor).

(1) ITEM NO	(2) SMR CODE	(3) NSN	(4) CAGEC	(5) PART NUMBER	(6) DESCRIPTION AND USABLE ON CODES(UOC)	(7) QTY
					GROUP 5203 AIR CONDITIONING COMPONENTS	
					FIG. 274H A/C WIRING HARNESS(REAR BLOWER MOTOR)	
* 1	PAOZZ	6150015397304	34623	6019765	WIRING HARNESS,BRAN..... UOC:TTA,TTT,TT1,UU1,UU2	1

END OF FIGURE

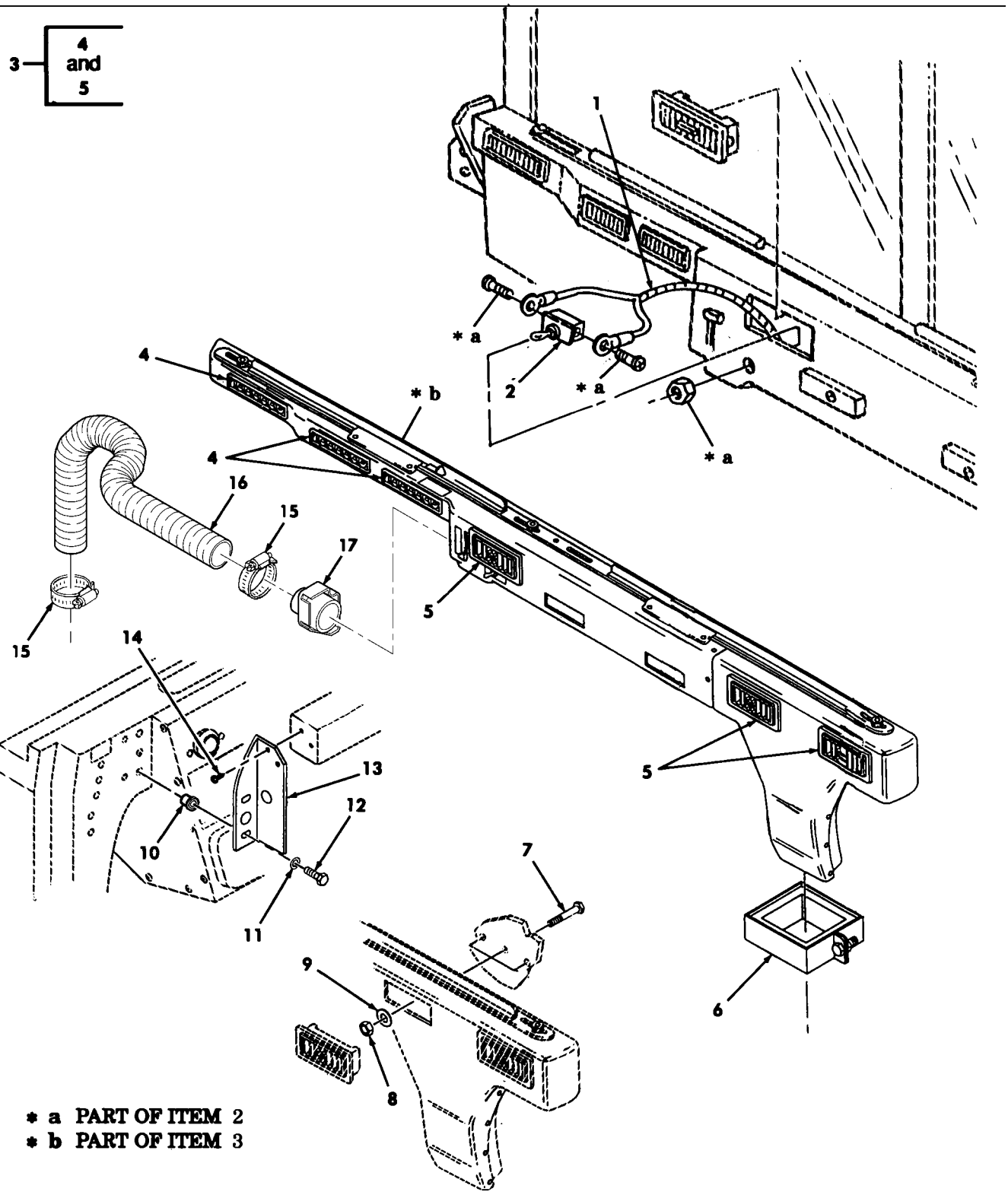

Figure 275. A/C Toggle Switch, Harness, and Air Distribution Duct Assembly.

(1) ITEM NO	(2) SMR CODE	(3) NSN	(4) CAGEC	(5) PART NUMBER	(6) DESCRIPTION AND USABLE ON CODES(UOC)	(7) QTY
					GROUP 5217 REFRIGERANT PIPING	
					FIG. 275 A/C TOGGLE SWITCH, HARNESS, AND AIR DISTRIBUTION DUCT ASSEMBLY	
1	PAFZZ	6150014213550	6W728	12-01393	CABLE ASSEMBLY,SWIT..... UOC:XBB	1
2	PAFZZ	5930014207197	6W728	11-00527	SWITCH,TOGGLE..... UOC:XBB	1
3	PAFZZ	2540014602428	6W728	70-05466	DUCT ASSEMBLY,AIR C..... UOC:XBB	1
4	PAFZZ	2540014207906	6W728	01-04783	.DIFFUSER,AIR,VEHICU..... UOC:XBB	3
5	PAFZZ	2540014207902	6W728	01-04776	.DIFFUSER,AIR,VEHICU..... UOC:XBB	3
6	PAFZZ	5340014205377	6W728	70-04738	CLAMP,LOOP..... UOC:XBB	1
7	PAFZZ	5305014753158	80204	B1821BH038C650N	SCREW,CAP,HEXAGON H 3/8-16 X 6.50.. UOC:XBB	3
8	PAFZZ	5310014398177	6W728	4397064-005	NUT,SELF-LOCKING,HE..... UOC:XBB	3
9	PAFZZ	5310014192413	6W728	4397005-014	WASHER,FLAT..... UOC:XBB	3
10	PAFZZ	5310015212135	6W728	4397050-025	PLUSNUT 1/4-20..... UOC:XBB	2
11	PAFZZ	5310014357784	6W728	4397005-011	WASHER,FLAT..... UOC:XBB	2
12	PAFZZ	5305002253843	80204	B1821BH025C100N	SCREW,CAP,HEXAGON H 1/4-20 X 1.00.. UOC:XBB	2
13	PAFZZ	5340014205373	6W728	55-03357	BRACKET,MOUNTING..... UOC:XBB	1
14	PAFZZ	5305014339254	6W728	4397053-010	SCREW,TAPPING..... UOC:XBB	2
* 15	PAFZZ	4730002782523	19207	11608950-6	CLAMP,HOSE..... UOC:XBB	2
* 16	PAFZZ	4720012795149	34623	12339265-3	HOSE,AIR DUCT..... UOC:XBB	1
* 17	PAFZZ	2590011868704	19207	12339252	BRACKET,VEHICULAR..... UOC:XBB	1

END OF FIGURE

DELETED

Figure 276. High and Low Pressure A/C Lines.

(1) ITEM NO	(2) SMR CODE	(3) NSN	(4) CAGEC	(5) PART NUMBER	(6) DESCRIPTION AND USABLE ON CODES(UOC)	(7) QTY
					GROUP 5217 REFRIGERANT PIPING	
					FIG. 276 HIGH AND LOW PRESSURE A/C LINES	

DELETED

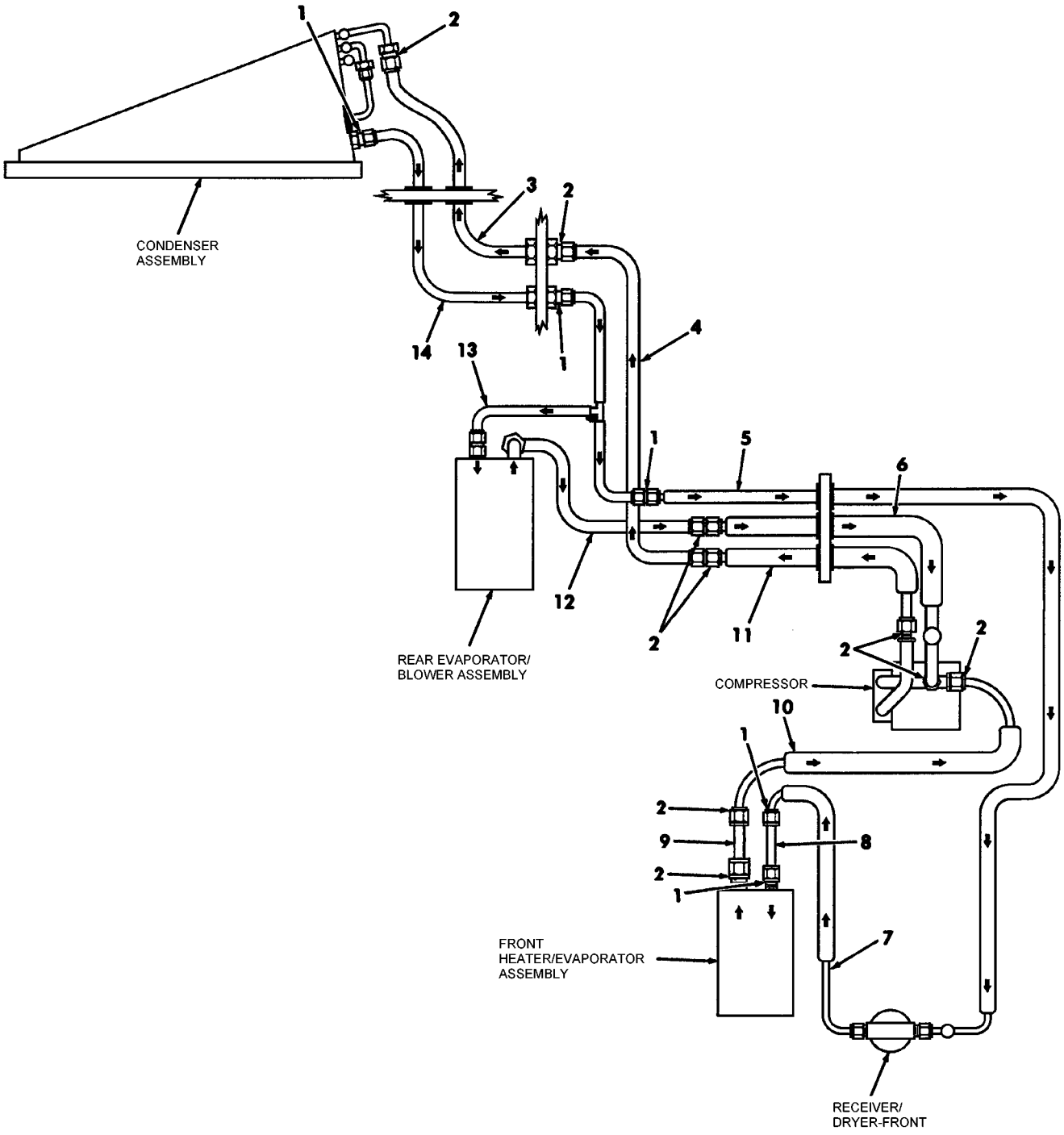

Figure 276A. High and Low Pressure A/C Lines.

(1) ITEM NO	(2) SMR CODE	(3) NSN	(4) CAGEC	(5) PART NUMBER	(6) DESCRIPTION AND USABLE ON CODES(UOC)	(7) QTY
					GROUP 5217 REFRIGERANT PIPING	
					FIG. 276A HIGH AND LOW PRESSURE A/C LINES	
1	PAFZZ	5331014197754	6W728	33-00778	O-RING #6..... UOC:XBB	11
2	PAFZZ	5331014197755	6W728	33-00781	O-RING #10..... UOC:XBB	10
* 3	PAFZZ	4720014997648	6W728	20-02418	HOSE ASSEMBLY,NONME LOW PRESSURE... UOC:XBB	1
* 4	PAFZZ	4710015169676	6W728	20-02507	TUBE ASSEMBLY,METAL DISCHARGE..... UOC:XBB	1
5	PAFZZ	4720015078681	6W728	20-02417	HOSE ASSEMBLY,NONME REAR EVAPORATOR TO RECEIVER/DRYER..... UOC:XBB	1
* 6	PAFZZ	4720015078678	6W728	20-02415	HOSE ASSEMBLY,NONME LOW PRESSURE... UOC:XBB	1
7	PAFZZ	4720014568970	6W728	20-01732	HOSE ASSEMBLY,NONME FRONT EVAPORATOR TO RECEIVER/DRYER..... UOC:XBB	1
* 8	PAFZZ	4710014603301	6W728	20-01852	TUBE ASSEMBLY,METAL FRONT RECEIVER/ DRYER TO EVAPORATOR..... UOC:XBB	1
* 9	PAFZZ	4710014602435	6W728	20-01851	TUBE ASSEMBLY,METAL EVAPORATOR TO COMPRESSOR MANIFOLD..... UOC:XBB	1
* 10	PAFZZ	4720014602436	6W728	20-01848	HOSE ASSEMBLY,NONME FRONT EVAPORATOR TO COMPRESSOR MANIFOLD... UOC:XBB	1
* 11	PAFZZ	4720015078679	6W728	20-02416	HOSE ASSEMBLY,NONME REAR CONDENSER TO COMPRESSOR MANIFFOLD..... UOC:XBB	1
* 12	PAFZZ	4720015169679	6W728	20-02506	HOSE ASSEMBLY,NONME REAR EVAPORATOR TO COMPRESSOR MANIFOLD..... UOC:XBB	1
* 13	PAFZZ	4710015169686	6W728	20-02508	TUBE ASSEMBLY,METAL CONDENSER TO TO REAR EVAPORATOR..... UOC:XBB	1
* 14	PAFZZ	4720014997635	6W728	20-02413	HOSE ASSEMBLY,NONME REAR CONDENSER TO TEE ASSEMBLY..... UOC:XBB	1

END OF FIGURE

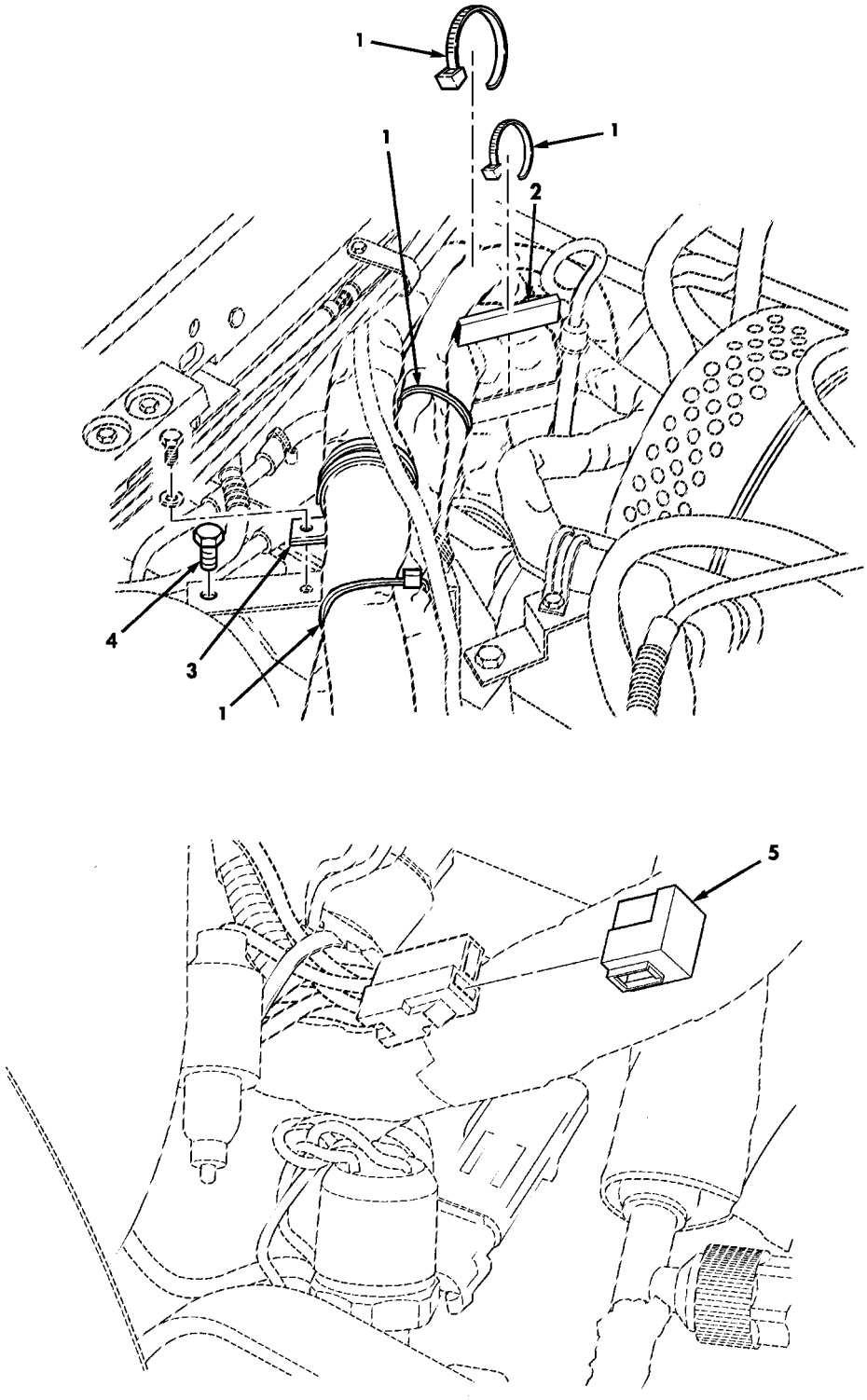

Figure 276B. A/C Cooling Tubes, Hoses, Wiring Harness, and Related Parts.

(1) ITEM NO	(2) SMR CODE	(3) NSN	(4) CAGEC	(5) PART NUMBER	(6) DESCRIPTION AND USABLE ON CODES(UOC)	(7) QTY
					GROUP 5217 REFRIGERANT PIPING	
					FIG. 276B A/C COOLING TUBES,HOSES, WIRING HARNESS,AND RELATED PARTS	
1	PAOZZ		6W728	01-02043	STRAP,TIEDOWN..... UOC:XBB	5
2	PAOZZ	5975015168350	6W728	33-00971	PROTECTOR,ELECTRICAL ..... UOC:XBB	1
3	PAOZZ	5340014997213	6W728	14-02043	CLAMP,LOOP..... UOC:XBB	1
* 4	PAOZZ	5306014206034	6W728	22-00005	BOLT,MACHINE..... UOC:XBB	1
* 5	PAOZZ		6W728	11-00383	DIODE..... UOC:XBB	1

END OF FIGURE

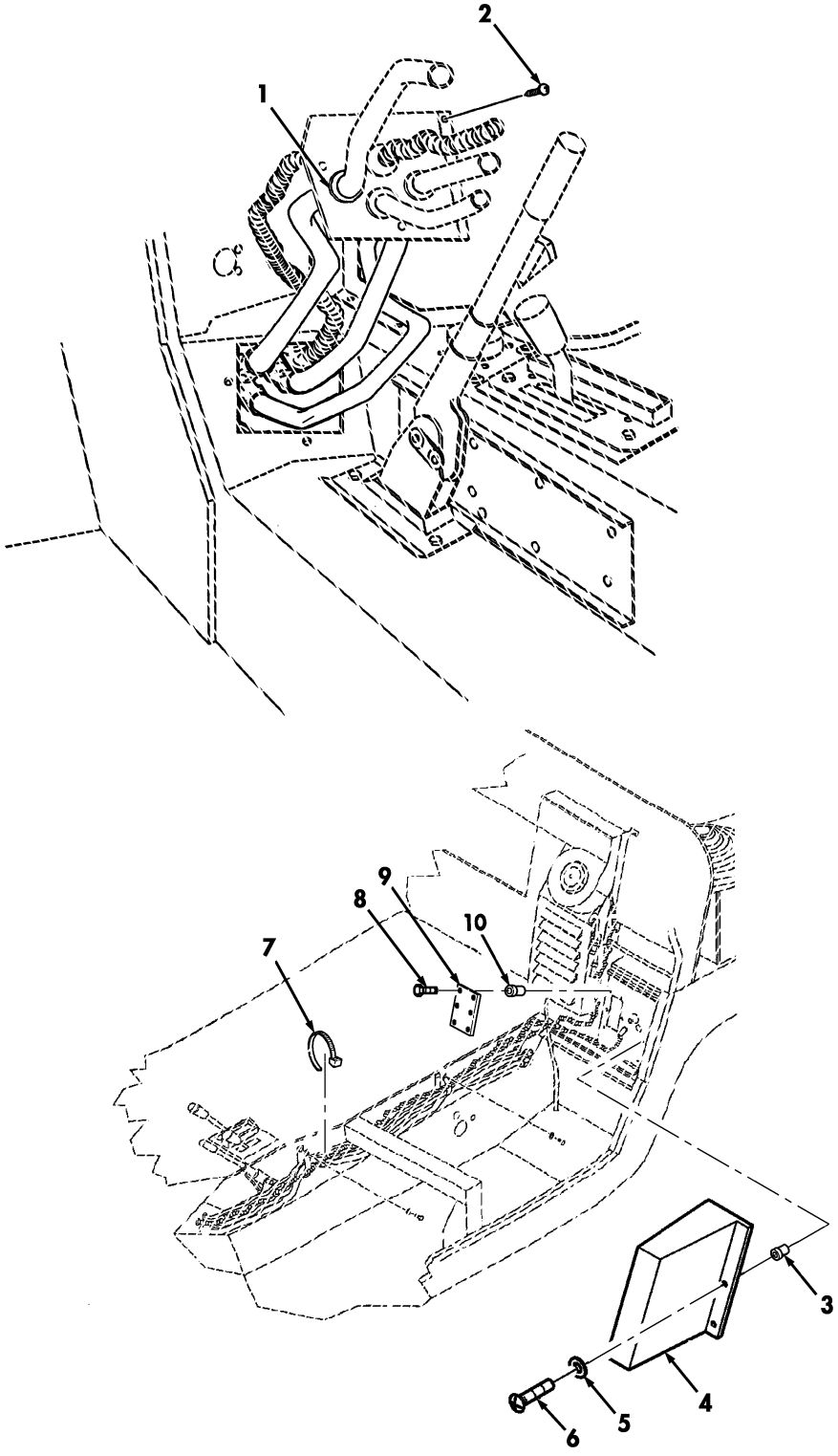

Figure 276C. A/C Cooling Tubes, Hoses, Wiring Harness Access Covers, and Related Parts.

(1) ITEM NO	(2) SMR CODE	(3) NSN	(4) CAGEC	(5) PART NUMBER	(6) DESCRIPTION AND USABLE ON CODES(UOC)	(7) QTY
					GROUP 5217 REFRIGERANT PIPING	
					FIG. 276C A/C COOLING TUBES,HOSES, WIRING HARNESS ACCESS COVERS,AND RELATED PARTS	
* 1	PAOZZ	5325014626391	6W728	33-00748	GROMMET,NONMETALLIC..... UOC:XBB	4
* 2	PAOZZ	5305014379168	6W728	4397084-020	SCREW,TAPPING..... UOC:XBB	1
* 3	PAOZZ	5310014691183	6W728	4397050-022	NUT,PLAIN,BLIND RIV #10-32..... UOC:XBB	2
* 4	PAOZZ	5340015182955	6W728	100035-002	COVER,ACCESS..... UOC:XBB	1
* 5	PAOZZ	5310014177333	6W728	4397005-008	WASHER,FLAT..... UOC:XBB	2
* 6	PAOZZ	5305014340831	6W728	4397013-074	SCREW 10-32 X 3/4..... UOC:XBB	2
* 7	PAOZZ	5979015001773	6W728	01-02694	STRAP,TIEDOWN..... UOC:XBB	2
* 8	PAOZZ	5306014307399	6W728	4397000-006	BOLT,MACHINE 1/4-20 X 3/4..... UOC:XBB	6
* 9	PAOZZ	5340014364351	6W728	4660945	COVER,ACCESS..... UOC:XBB	1
* 10	PAOZZ	5310015212135	6W728	4397050-025	NUT,PLAIN,BLIND RIV 1/4-20..... UOC:XBB	6

END OF FIGURE

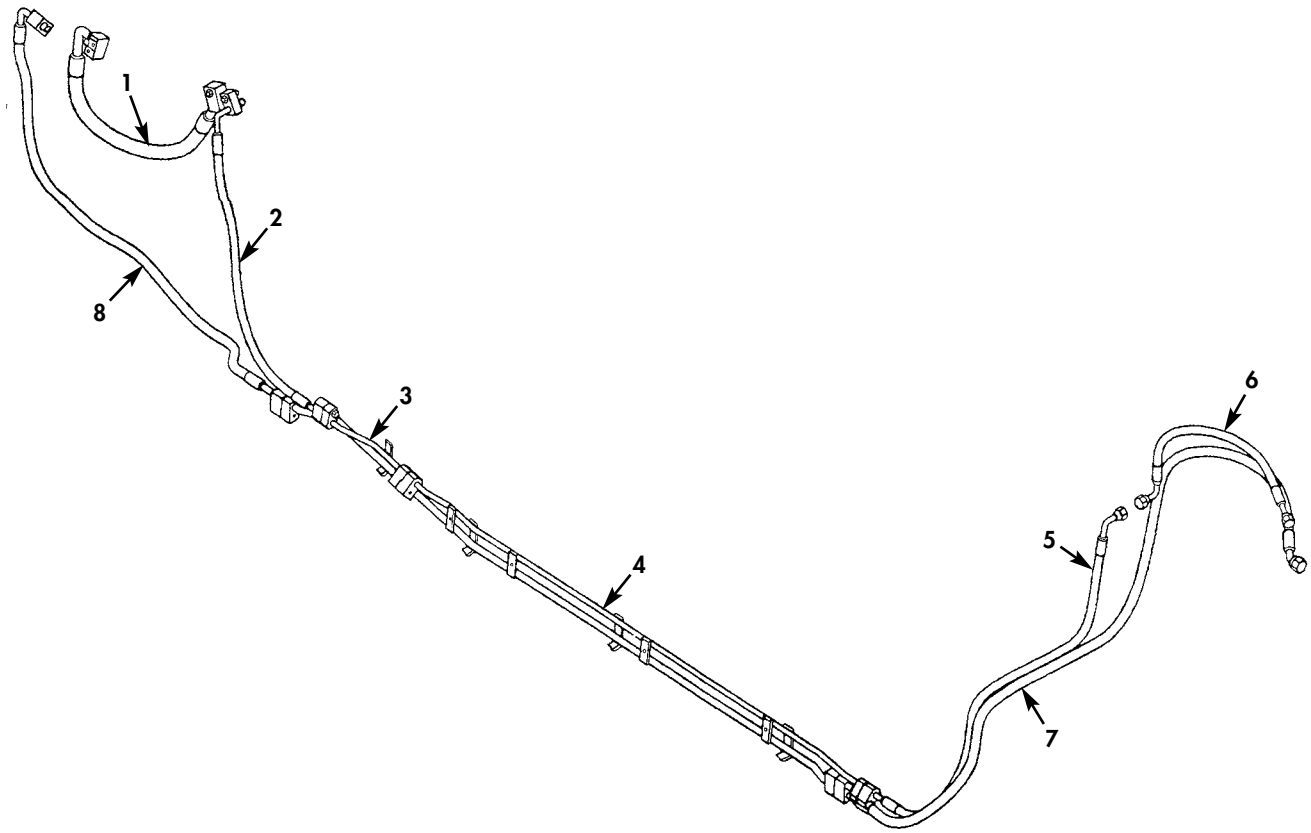

Figure 276D. A/C Hard Lines and Hoses, Two-Man Crew.

(1) ITEM NO	(2) SMR CODE	(3) NSN	(4) CAGEC	(5) PART NUMBER	(6) DESCRIPTION AND USABLE ON CODES(UOC)	(7) QTY
					GROUP 5217 REFRIGERANT PIPING	
					FIG. 276D A/C HARD LINES AND HOSES, TWO-MAN CREW	
* 1	PAFZZ	4720015363334	34623	6015455	HOSE ASSEMBLY,NONME #12 SUCTION COMPRESSOR TO SEALING PLATE..... UOC:UUA,UUU	1
* 2	PAFZZ	4720015487198	34623	6015454	ASSEMBLY,HOSE #6 LIQUID TO SEALING PLATE..... UOC:UUA,UUU	1
* 3	PAFZZ	4720015366138	34623	6019797	HOSE ASSEMBLY,NONME A/C,LIQUID FRONT UOC:UUA,UUU	1
* 4	PAFZZ	4710015364106	34623	6019796	TUBE ASSEMBLY,METAL A/C,FRONT TO REAR..... UOC:UUA,UUU	1
* 5	PAFZZ	4720015362674	34623	6015452	HOSE ASSEMBLY,NONME #6 LIQUID DRYER HARD LINE..... UOC:UUA,UUU	1
* 6	PAFZZ	4720015362992	34623	6015592	HOSE ASSEMBLY,NONME #6 DRYER TO CONDENSER..... UOC:UUA,UUU	1
* 7	PAFZZ	4720015362727	34623	6015453	HOSE ASSEMBLY,NONME #8 DISCHARGE TO HARD LINE..... UOC:UUA,UUU	1
* 8	PAFZZ	4720015363328	34623	6015456	HOSE ASSEMBLY,NONME #8 DISCHARGE TO COMPRESSOR..... UOC:UUA,UUU	1
					END OF FIGURE	

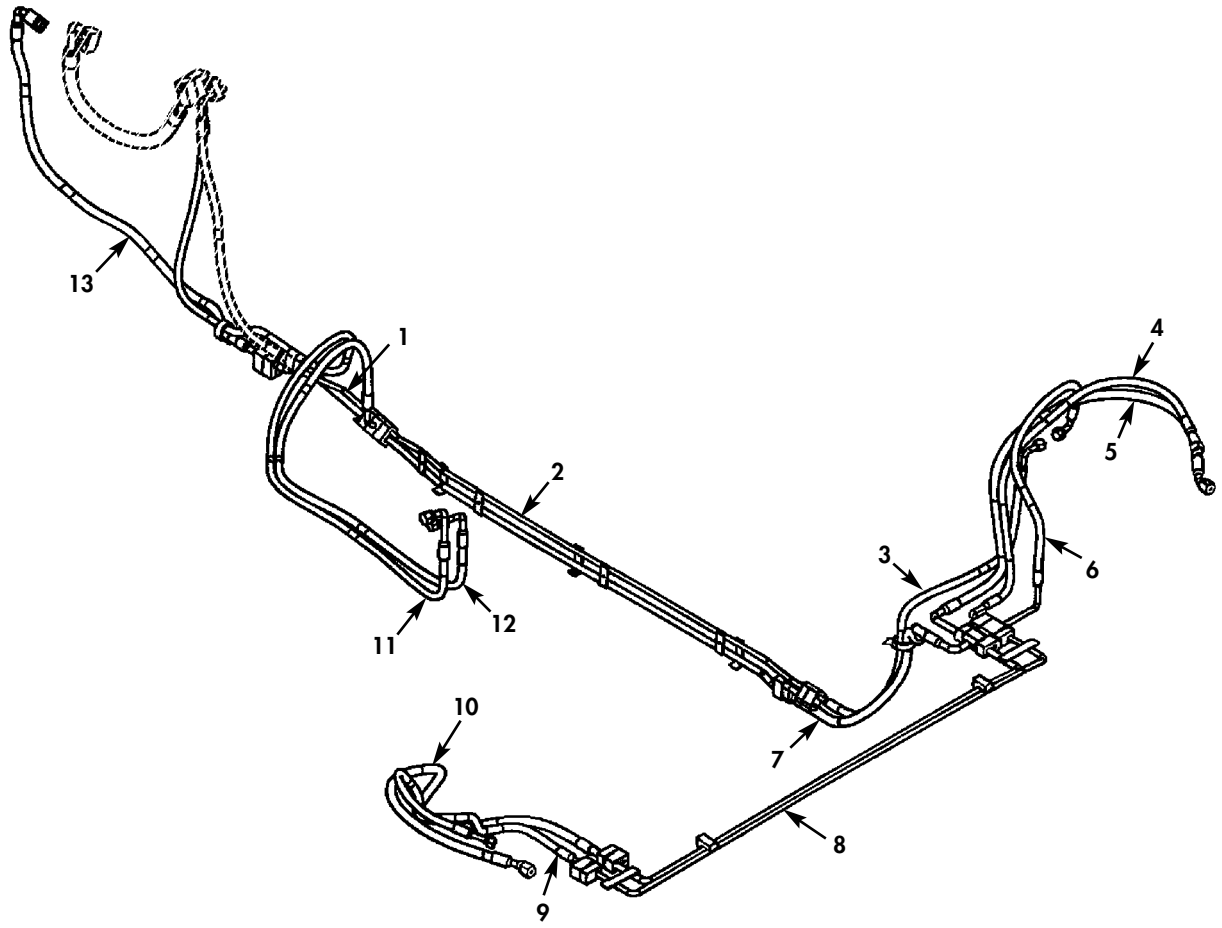

Figure 276E. A/C Hard Lines and Hoses, Four-Man Crew.

(1) ITEM NO	(2) SMR CODE	(3) NSN	(4) CAGEC	(5) PART NUMBER	(6) DESCRIPTION AND USABLE ON CODES(UOC)	(7) QTY
					GROUP 5217 REFRIGERANT PIPING	
					FIG. 276E A/C HARD LINES AND HOSES, FOUR-MAN CREW	
* 1	PAFZZ	4720015366138	34623	6019797	HOSE ASSEMBLY,NONME LIQUID,FRONT... UOC:TTA,TTT,TT1,UU1,UU2	1
* 2	PAFZZ	4710015364106	34623	6019796	TUBE ASSEMBLY,METAL LIQUID,FRONT TO REAR..... UOC:TTA,TTT,TT1,UU1,UU2	1
* 3	PAFZZ	4720015362674	34623	6015452	HOSE ASSEMBLY,NONME #6,LIQUID DRYER TO HARD LINE..... UOC:TTA,TTT,TT1,UU1,UU2	1
* 4	PAFZZ	4720015364589	34623	6015584	HOSE ASSEMBLY,NONME #6,R.H. LIQUID TO CONDENSER..... UOC:TTA,TTT,TT1,UU1,UU2	1
* 5	PAFZZ	4720015362681	34623	6015583	HOSE ASSEMBLY,NONME R.H.,DISCHARGE TO CONDENSER..... UOC:TTA,TTT,TT1,UU1,UU2	1
* 6	PAFZZ	4720015363005	34623	6015463	HOSE ASSEMBLY,NONME #6,DRYER TO CONDENSER..... UOC:TTA,TTT,TT1,UU1,UU2	1
* 7	PAFZZ	4720015362995	34623	6015671	HOSE ASSEMBLY,NONME TO HARD LINE... UOC:TTA,TTT,TT1,UU1,UU2	1
* 8	PAFZZ	4710015362688	34623	6019795	TUBE ASSEMBLY,METAL DRIVER TO PASSENGER SIDE..... UOC:TTA,TTT,TT1,UU1,UU2	1
* 9	PAFZZ	4720015363751	34623	6015581	HOSE ASSEMBLY,NONME #8,L.H., DISCHARGE TO CONDENSER..... UOC:TTA,TTT,TT1,UU1,UU2	1
* 10	PAFZZ	4720015362999	34623	6015582	HOSE ASSEMBLY,NONME #6,L.H. LIQUID TO CONDENSER..... UOC:TTA,TTT,TT1,UU1,UU2	1
* 11	PAFZZ	4720015363061	34623	6015457	HOSE ASSEMBLY,NONME #12 A/C SUCTION UOC:TTA,TTT,TT1,UU1,UU2	1
* 12	PAFZZ	4720015362673	34623	6015464	HOSE ASSEMBLY,NONME #6,R.H.,REAR TO HARD LINE..... UOC:TTA,TTT,TT1,UU1,UU2	1
* 13	PAFZZ	4720015363328	34623	6015456	HOSE ASSEMBLY,NONME #8,DISCHARGE TO COMPRESSOR..... UOC:TTA,TTT,TT1,UU1,UU2	1

END OF FIGURE

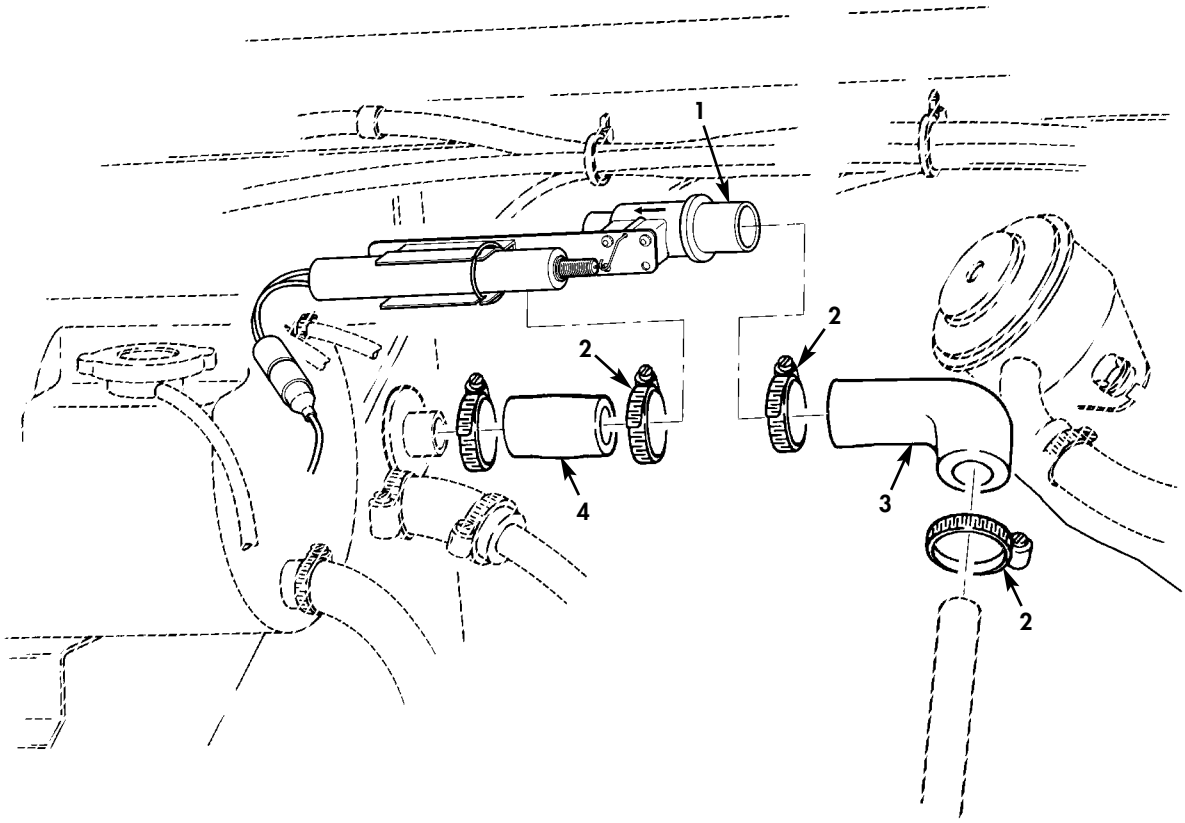

Figure 276F. Heater Shutoff Valve.

(1) ITEM NO	(2) SMR CODE	(3) NSN	(4) CAGEC	(5) PART NUMBER	(6) DESCRIPTION AND USABLE ON CODES(UOC)	(7) QTY
					GROUP 5217 REFRIGERANT PIPING	
					FIG. 276F HEATER SHUTOFF VALVE	
* 1	PAOZZ	4810015363832	34623	6015659	VALVE,FLOW CONTROL..... UOC:TTA,TTT,TT1,UUA,UUU,UU1,UU2	1
* 2	PAOZZ	4730009083193	81343	JAE J1508	CLAMP,HOSE 24MM..... UOC:TTA,TTT,TT1,UUA,UUU,UU1,UU2	4
* 3	PAOZZ	4720015368716	34623	6023974	HOSE ASSEMBLY,NONME 5/8 DIA..... UOC:TTA,TTT,TT1,UUA,UUU,UU1,UU2	1
* 4	PAOZZ	4720015370552	34623	6023975	HOSE,ASSEMBLY,NONME 5/8 DIA..... UOC:TTA,TTT,TT1,UUA,UUU,UU1,UU2	1
					END OF FIGURE	

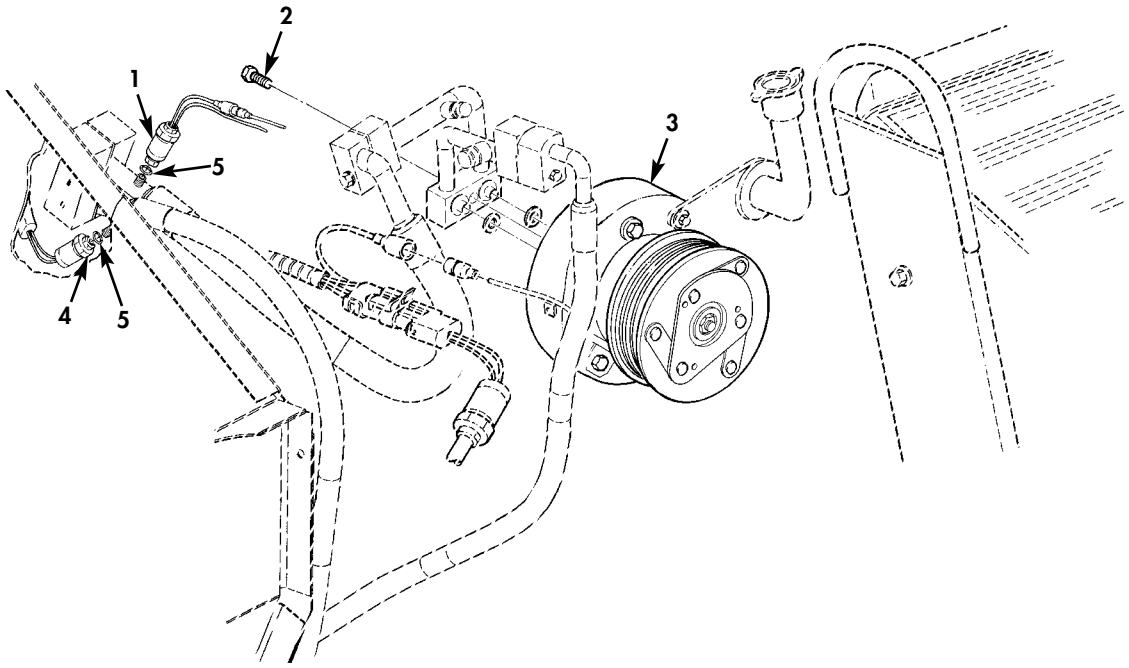

Figure 276G. A/C Compressor and Manifold (Sheet 1 of 2).

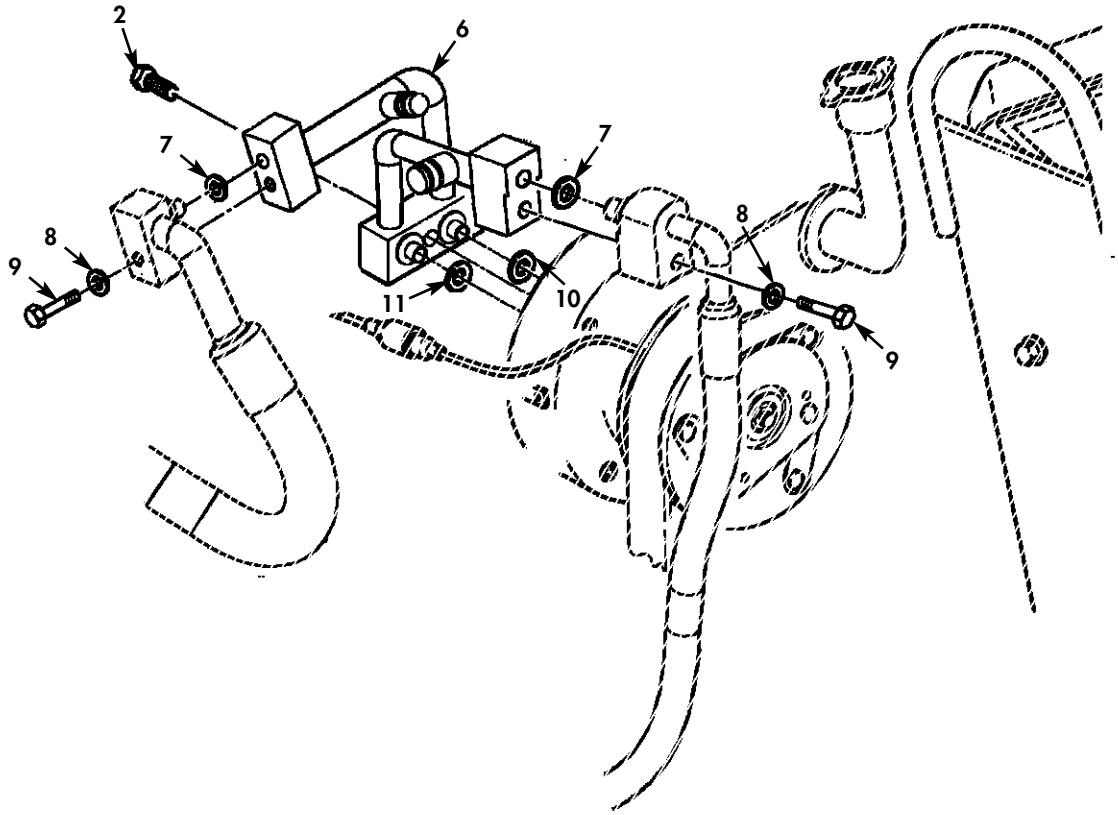

Figure 276G. A/C Compressor and Manifold (Sheet 2 of 2).

(1) ITEM NO	(2) SMR CODE	(3) NSN	(4) CAGEC	(5) PART NUMBER	(6) DESCRIPTION AND USABLE ON CODES(UOC)	(7) QTY
					GROUP 5217 REFRIGERANT PIPING	
					FIG. 276G A/C COMPRESSOR AND MANIFOLD	
* 1	PAFZZ	5930015363012	34623	6015556	SWITCH,PRESSURE LOW PRESSURE..... UOC:TTA,TTT,TT1,UUA,UU1,UU2	1
* 2	PAFZZ	5306015486805	3M915	M21C1000 40DT	BOLT,MACHINE..... UOC:TTA,TTT,TT1,UUA,UU1,UU2	1
* 3	PAFZZ	4130015396297	0VL44	4526529	COMPRESSOR,REFRIGER..... UOC:TTA,TTT,TT1,UUA,UU1,UU2	1
* 4	PAFZZ	5930015363033	34623	6015557	SWITCH,PRESSURE HIGH PRESSURE..... UOC:TTA,TTT,TT1,UUA,UU1,UU2	1
* 5	PAFZZ	5331014602442	6W728	33-00779	O-RING..... UOC:TTA,TTT,TT1,UUA,UU1,UU2	2
* 6	PAFZZ	4710015364174	34623	6015593	TUBE ASSEMBLY,METAL..... UOC:TTA,TTT,TT1,UUA,UU1,UU2	1
* 7	PAFZZ	5310015363376	34623	6015624	WASHER,SEAL..... UOC:TTA,TTT,TT1,UUA,UU1,UU2	2
* 8	PAFZZ	5310005825965	80205	MS35338-44	WASHER,LOCK..... UOC:TTA,TTT,TT1,UUA,UU1,UU2	4
* 9	PAOZZ	5305000712509	80204	B1821BH025C150N	SCREW,CAP,HEXAGON H 1/4-20 X 1.50.. UOC:TTA,TTT,TT1,UUA,UU1,UU2	4
* 10	PAFZZ	5310015486846	34623	6030542	SEALING WASHER,LARG..... UOC:TTA,TTT,TT1,UUA,UU1,UU2	1
* 11	PAFZZ	5310015486832	34623	6030541	SEALING WASHER, SMAL..... UOC:TTA,TTT,TT1,UUA,UU1,UU2	1

END OF FIGURE

DELETED

Figure 277. Rear Condenser Lines, Jumper Harness, and Related Parts.

(1) ITEM NO	(2) SMR CODE	(3) NSN	(4) CAGEC	(5) PART NUMBER	(6) DESCRIPTION AND USABLE ON CODES(UOC)	(7) QTY
					GROUP 5217 REFRIGERANT PIPING	
					FIG. 277 REAR CONDENSER LINES JUMPER HARNESS, AND RELATED PARTS	

DELETED

DELETED

Figure 278. Condenser Fan Exhaust and Supply Vent.

(1) ITEM NO	(2) SMR CODE	(3) NSN	(4) CAGEC	(5) PART NUMBER	(6) DESCRIPTION AND USABLE ON CODES(UOC)	(7) QTY
					GROUP 5217 REFRIGERANT PIPING	
					FIG. 278 CONDENSER FAN EXHAUST AND SUPPLY VENT	

DELETED

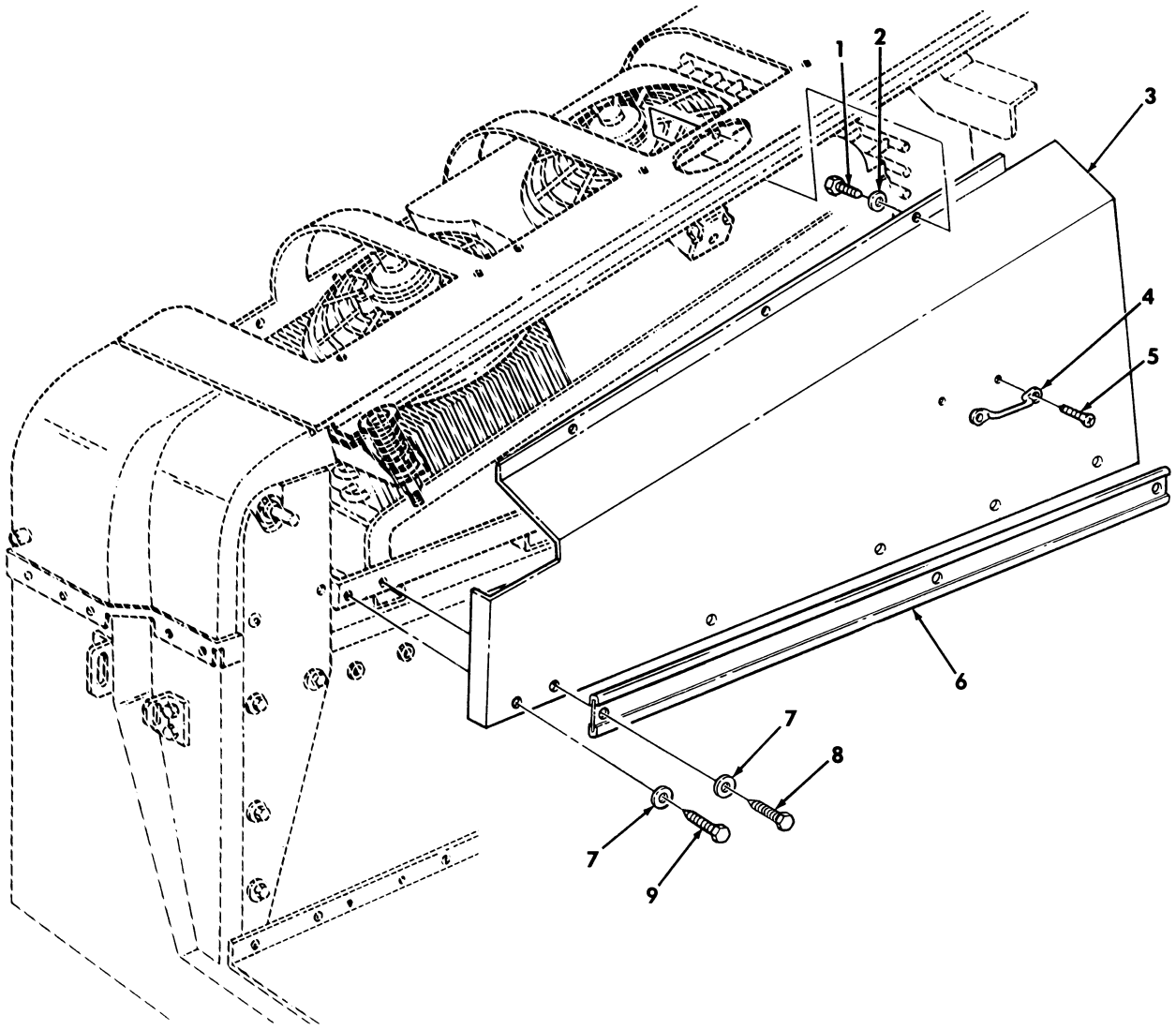

Figure 279. Condenser Fan Access Panel.

(1) ITEM NO	(2) SMR CODE	(3) NSN	(4) CAGEC	(5) PART NUMBER	(6) DESCRIPTION AND USABLE ON CODES(UOC)	(7) QTY
					GROUP 5217 REFRIGERANT PIPING	
					FIG. 279 CONDENSER FAN ACCESS PANEL	
1	PAFZZ	5305014652825	6W728	94-00150	SCREW,TAPPING..... UOC:XBB	3
* 2	PAFZZ	5310001686412	56365	23601-00160	WASHER,FLAT..... UOC:XBB	3
3	PAFZZ	2510014754737	6W728	70-05433	PANEL,VEHICULAR OPE..... UOC:XBB	1
4	PAFZZ	5340014341809	19207	12338839-3	STRAP,RETAINING..... UOC:XBB	1
5	PAFZZ	5305014652817	6W728	4397063-072	SCREW,MACHINE..... UOC:XBB	2
6	PAFZZ	2590014615213	6W728	70-05432	MOLDING,METAL..... UOC:XBB	1
* 7	PAFZZ	5310014357784	6W728	4397005-010	WASHER,FLAT..... UOC:XBB	4
* 8	PAFZZ	5306014307399	6W728	4397000-006	SCREW,MACHINE .250-20 X .750..... UOC:XBB	4
9	PAFZZ	5305014652820	6W728	91-00164	SCREW,MCAHINE..... UOC:XBB	3

END OF FIGURE

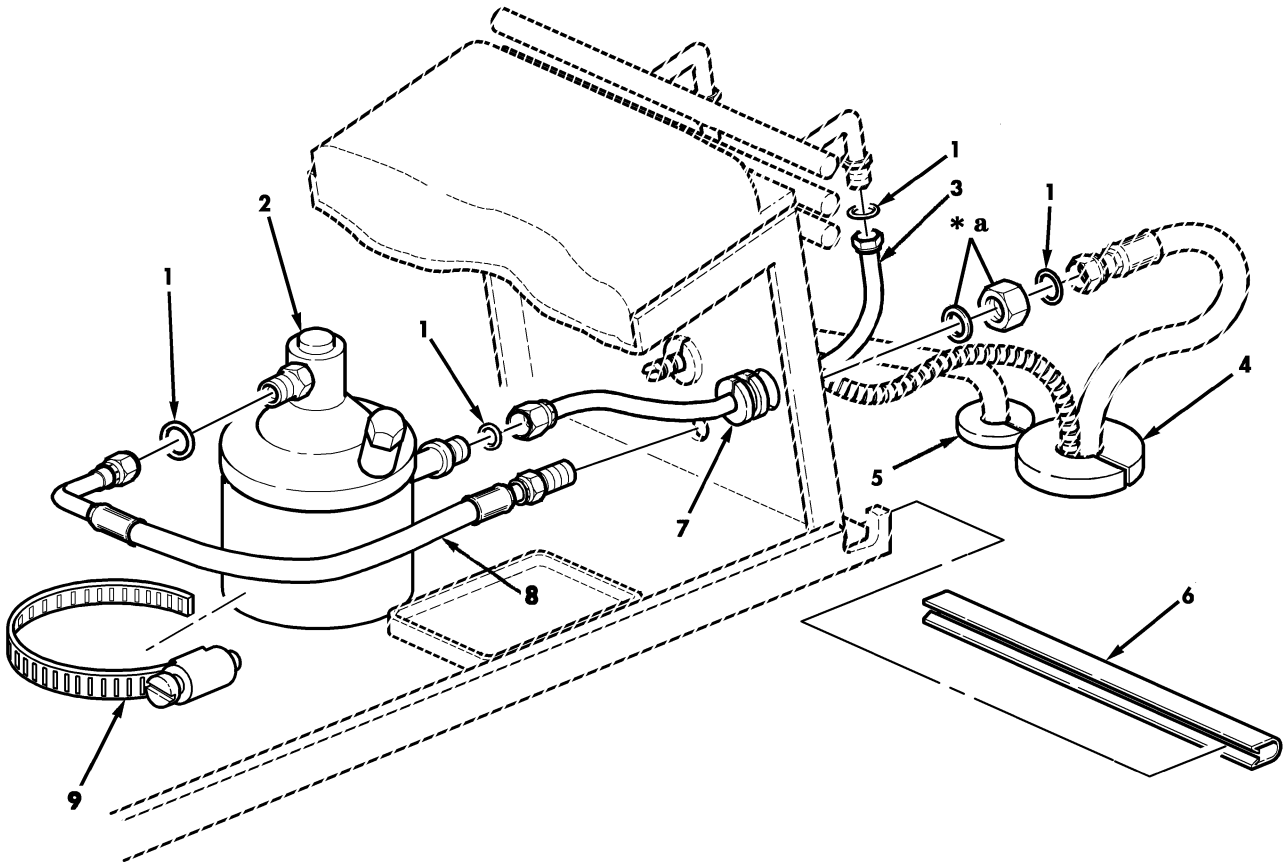

✱ **a** PART OF ITEM 8

Figure 279A. Rear A/C Dryer Condenser.

(1) ITEM NO	(2) SMR CODE	(3) NSN	(4) CAGEC	(5) PART NUMBER	(6) DESCRIPTION AND USABLE ON CODES(UOC)	(7) QTY
					GROUP 5217 REFRIGERANT PIPING	
					FIG. 279A REAR A/C DRYER CONDENSER	
1	PAFZZ	5331014197754	6W728	33-00778	O-RING..... UOC:XBB	4
2	PAFZZ	4310014602456	6W728	07-00260	RECEIVER-DEHYDRATER..... UOC:XBB	1
* 3	PAFZZ	4710014563627	6W728	20-01836	TUBE,ASSEMBLY,METAL..... UOC:XBB	1
* 4	PAOZZ	5325015166126	6W728	33-00220	GROMMET,NONMETALLIC..... UOC:XBB	1
* 5	PAOZZ	5325014626391	6W728	33-00748	GROMMET,NONMETALLIC..... UOC:XBB	1
* 6	PAOZZ	5330015134894	6W728	33-01016	GASKET,TRIMLOCK 18 INCHES LONG..... UOC:XBB	1
* 7	PAOZZ	5331014197755	6W728	33-00781	GROMMET,NONMETALLIC..... UOC:XBB	1
* 8	PAFZZ	4720014997635	6W728	20-02413	HOSE ASSEMBLY,NONME..... UOC:XBB	1
* 9	PAFZZ	5340014602457	6W728	21-00748	CLAMP,HOSE..... UOC:XBB	1

END OF FIGURE

DELETED

Figure 280. Rear A/C Dryer and Condenser Lines.

(1) ITEM NO	(2) SMR CODE	(3) NSN	(4) CAGEC	(5) PART NUMBER	(6) DESCRIPTION AND USABLE ON CODES(UOC)	(7) QTY
					GROUP 5217 REFRIGERANT PIPING	
					FIG. 280 REAR A/C DRYER AND CONDENSER LINES	

DELETED

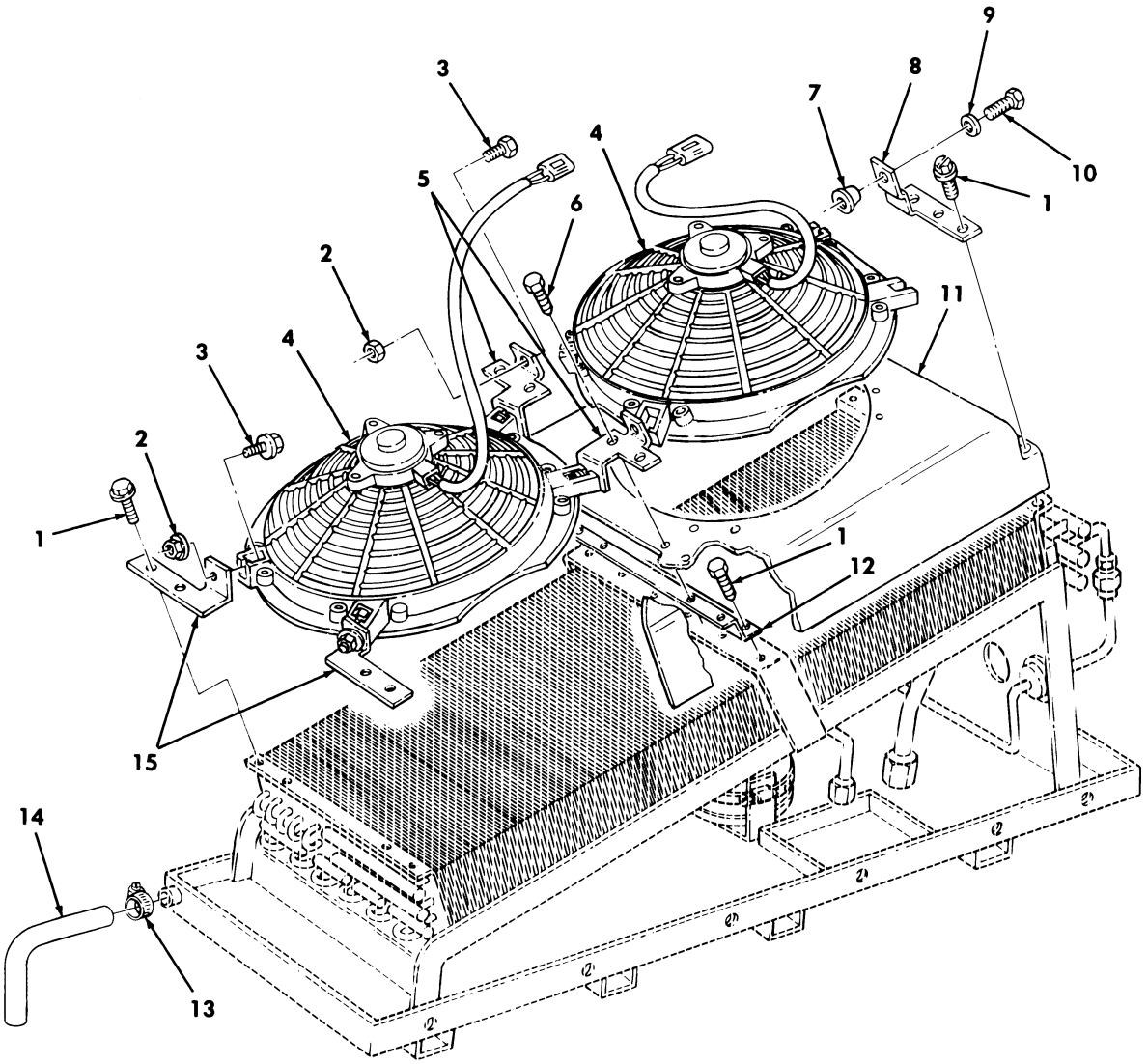

Figure 281. Rear A/C Condenser Fan and Shroud.

(1) ITEM NO	(2) SMR CODE	(3) NSN	(4) CAGEC	(5) PART NUMBER	(6) DESCRIPTION AND USABLE ON CODES(UOC)	(7) QTY
					GROUP 5217 REFRIGERANT PIPING	
					FIG. 281 REAR A/C CONDENSER FAN AND SHROUD	
1	PAFZZ	5305014652818	6W728	94-00004	SCREW,MACHINE..... UOC:XBB	27
2	PAFZZ	5310014633652	6W728	22-00090	NUT,PLAIN,EXTENDED..... UOC:XBB	6
3	PAFZZ	5305014206770	6W728	38-00204	SCREW,CAP,HEXAGON H..... UOC:XBB	6
4	PAFZZ	4140014565685	6W728	32-00372	FAN,CIRCULATING..... UOC:XBB	2
5	PAFZZ	5340014603304	6W728	55-03903	BRACKET,MOUNTING L.H..... UOC:XBB	1
5	PAFZZ	5340014602446	6W728	55-03904	BRACKET,MOUNTING R.H..... UOC:XBB	1
6	PAFZZ	5305014664358	6W728	94-00140	SCREW,MACHINE..... UOC:XBB	4
7	PAFZZ	5325014653881	6W728	01-05132	INSERT,SCREW THREAD..... UOC:XBB	2
8	PAFZZ	5340014602420	6W728	55-03924	BRACKET,DOUBLE ANGL L.H..... UOC:XBB	1
8	PAFZZ	5340014602422	6W728	55-03925	BRACKET,DOUBLE ANGL R.H..... UOC:XBB	1
9	PAFZZ	5310014630620	6W728	93-00059	WASHER,FLAT..... UOC:XBB	2
10	PAFZZ	5306014652822	6W728	38-00205	BOLT,MACHINE..... UOC:XBB	2
11	PAFZZ	2510014604959	6W728	01-05098	SHIELD,FAN..... UOC:XBB	1
12	PAFZZ	5340014602455	6W728	55-03987	BRACKET,MULTIPLE AN..... UOC:XBB	1
13	PAFZZ	4730014609074	6W728	21-00445	CLAMP,HOSE..... UOC:XBB	1
14	MFFZZ		6W728	01-02420-AR	HOSE,DRAIN MAKE FROM HOSE, P/N 01-02420, LENGTH AS REQUIRED..... UOC:XBB	1
15	PAFZZ	5340014602424	6W728	55-03884	BRACKET,MOUNTING R.H..... UOC:XBB	1
15	PAFZZ	5340014603305	6W728	55-03885	BRACKET,MOUNTING L.H..... UOC:XBB	1

END OF FIGURE

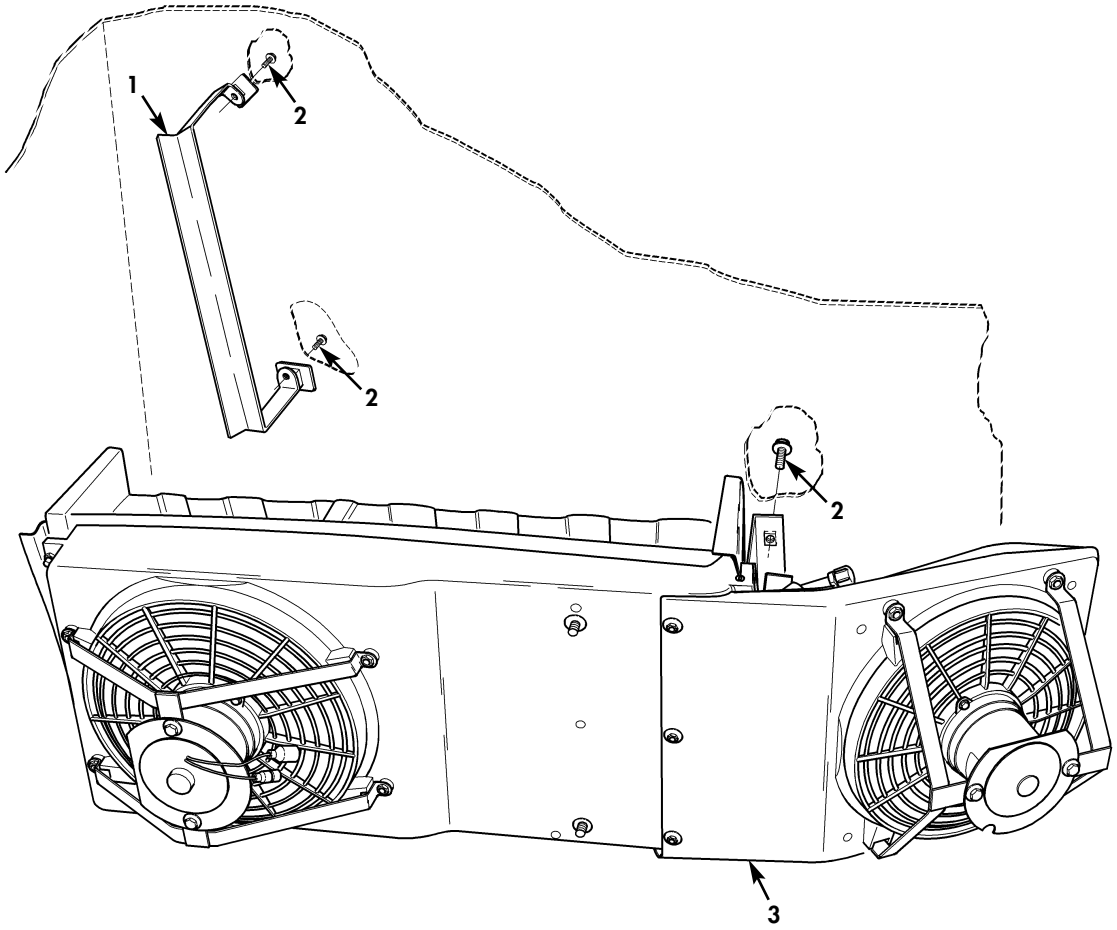

Figure 281A. A/C Condenser Fans Mounting.

(1) ITEM NO	(2) SMR CODE	(3) NSN	(4) CAGEC	(5) PART NUMBER	(6) DESCRIPTION AND USABLE ON CODES(UOC)	(7) QTY
					GROUP 5217 REFRIGERANT PIPING	
					FIG. 281A A/C CONDENSER FAN MOUNTING	
* 1	PAFZZ	5340015362737	0VL44	4108852	BRACKET,MOUNTING R.H..... UOC:TTA,TTT,TT1,UUA,UUU,UU1,UU2	1
* 1	PAFZZ	5340015363766	34623	6015665	BRACKET,MOUNTING L.H..... UOC:TTA,TTT,TT1,UU1,UU2	1
* 2	PAFZZ	5305015394101	34623	6015663	SCREW,MACHINE..... UOC:TTA,TTT,TT1,UUA,UUU,UU1,UU2	7
* 3	PAFZZ		34623	6015459	CONDENSER FAN ASSEM L.H.,4-MAN..... UOC:TTA,TTT,TT1,UU1,UU2	1
* 3	PAFZZ		34623	6015458	CONDENSER FAN ASSEM R.H.,2-MAN AND 4-MAN..... UOC:TTA,TTT,TT1,UUA,UUU,UU1,UU2	1

END OF FIGURE

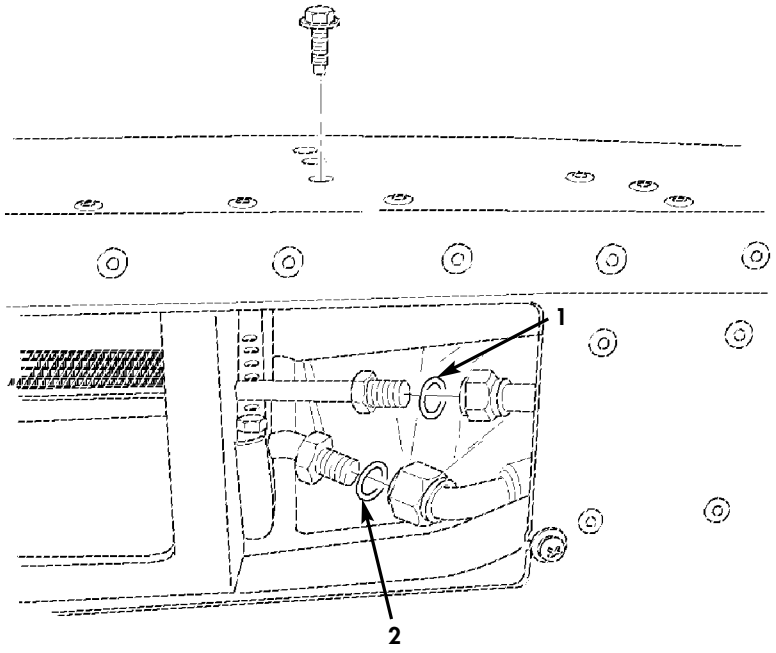

Figure 281B. A/C Condenser Fan Lines.

(1) ITEM NO	(2) SMR CODE	(3) NSN	(4) CAGEC	(5) PART NUMBER	(6) DESCRIPTION AND USABLE ON CODES(UOC)	(7) QTY
					GROUP 5217 REFRIGERANT PIPING	
					FIG. 281B A/C CONDENSER FAN LINES	
* 1	PAFZZ	5331015206192	34623	6006173	O-RING #6..... UOC:TTA,TTT,TT1,UUA,UUU,UU1,UU2	1
* 2	PAFZZ	5331015204916	34623	6006174	O-RING #8..... UOC:TTA,TTT,TT1,UUA,UUU,UU1,UU2	1

END OF FIGURE

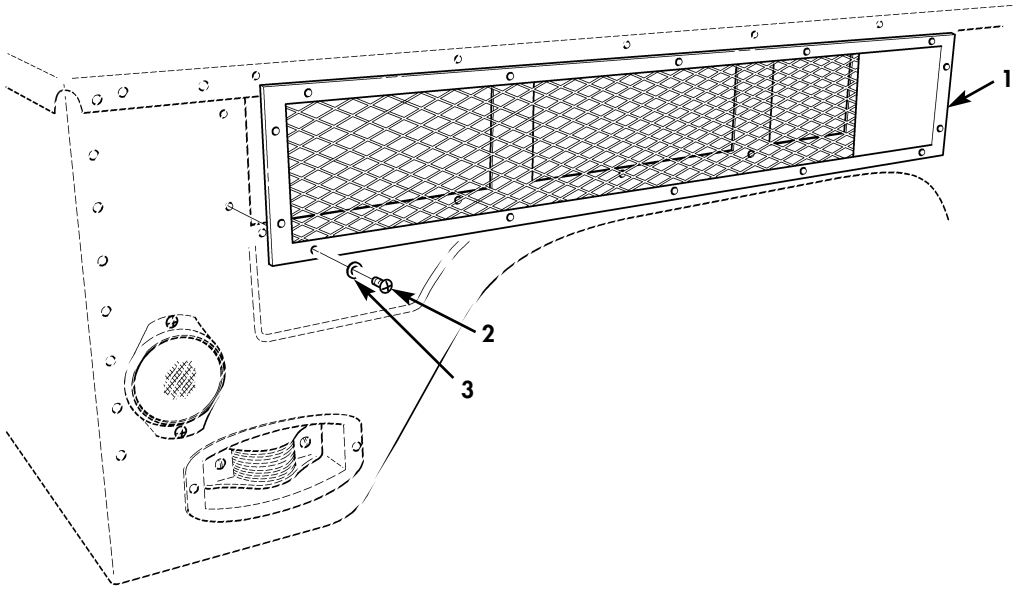

Figure 281C. A/C Condenser Fan Intake Grill.

(1) ITEM NO	(2) SMR CODE	(3) NSN	(4) CAGEC	(5) PART NUMBER	(6) DESCRIPTION AND USABLE ON CODES(UOC)	(7) QTY
					GROUP 5217 REFRIGERANT PIPING	
					FIG. 281C A/C CONDENSER FAN INTAKE GRILL	
* 1	PAOZZ	2510015370678	34623	6015470	GRILLE,METAL..... UOC:TTA,TTT,TT1,UUA,UUU,UU1,UU2	1
* 2	PAOZZ	5305010065736	19207	12342499-3	SCREW,TAPPING #10..... UOC:TTA,TTT,TT1,UUA,UUU,UU1,UU2	14
* 3	PAOZZ	5310012349416	96906	MS51412-2	WASHER,FLAT #10..... UOC:TTA,TTT,TT1,UUA,UUU,UU1,UU2	14

END OF FIGURE

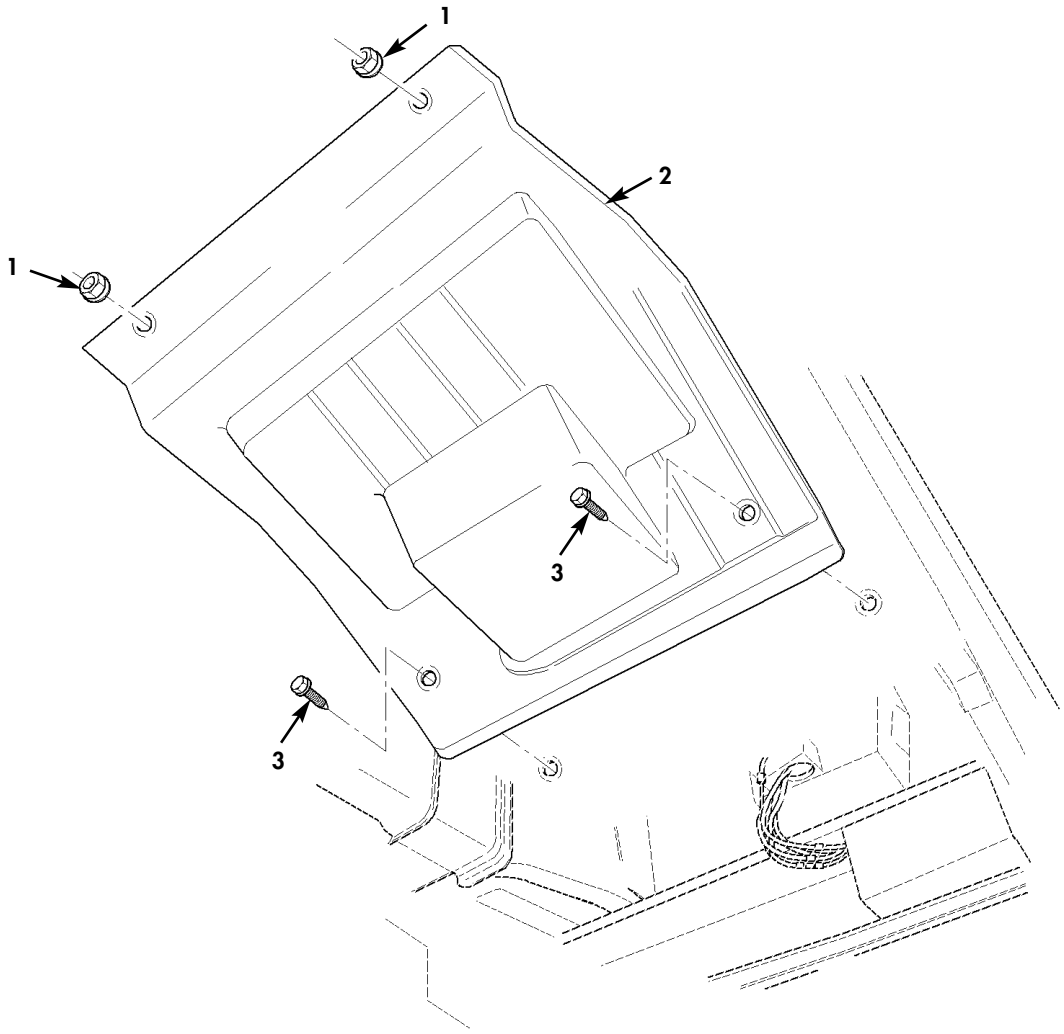

Figure 281D. A/C Condenser Fan Wheelwell Closeout.

(1) ITEM NO	(2) SMR CODE	(3) NSN	(4) CAGEC	(5) PART NUMBER	(6) DESCRIPTION AND USABLE ON CODES(UOC)	(7) QTY
					GROUP 5217 REFRIGERANT PIPING	
					FIG. 281D A/C CONDENSER FAN WHEELWELL CLOSEOUT	
* 1	PAOZZ	5310015362964	34623	6015660	WASHER,FLAT(FLANGED) 1/4,2-MAN..... UOC:UUA,UUU	2
* 1	PAOZZ	5310015362964	34623	6015660	WASHER,FLAT(FLANGED) 1/4,4-MAN..... UOC:TTA,TTT,TT1,UU1,UU2	4
* 2	PAOZZ	5340015364022	34623	6015554	COVER,ACCESS 2-MAN..... UOC:UUA,UUU	1
* 2	PAOZZ	5340015364022	34623	6015554	COVER,ACCESS 4-MAN..... UOC:TTA,TTT,TT1,UU1,UU2	2
* 3	PAOZZ	5305010065736	19207	12342499-3	SCREW,TAPPING #10-32,2-MAN..... UOC:UUA,UUU	2
* 3	PAOZZ	5305010065736	19207	12342499-3	SCREW,TAPPING #10-32,4-MAN..... UOC:TTA,TTT,TT1,UU1,UU2	4

END OF FIGURE

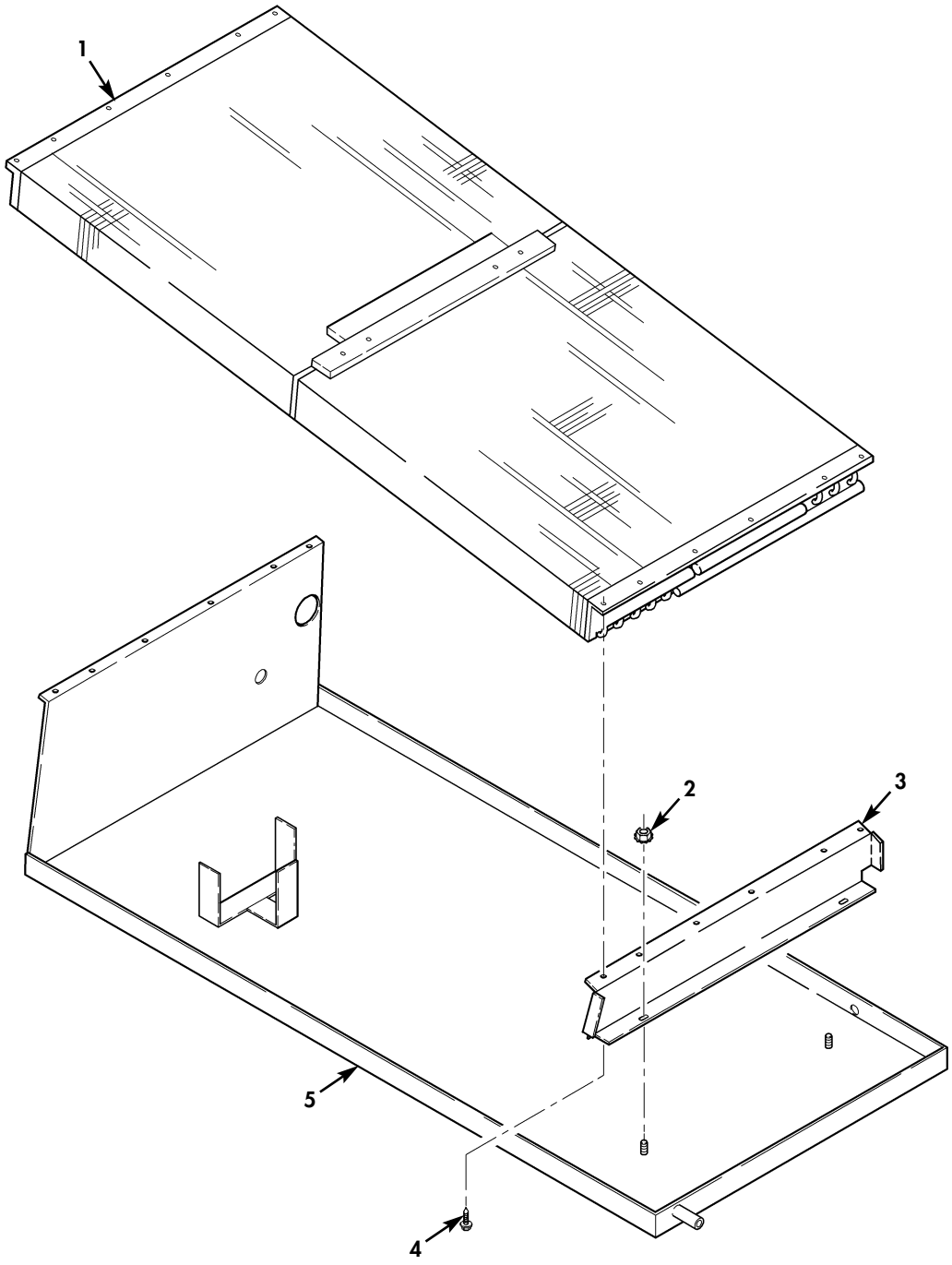

Figure 282. Rear A/C Condenser and Tray Assembly.

(1) ITEM NO	(2) SMR CODE	(3) NSN	(4) CAGEC	(5) PART NUMBER	(6) DESCRIPTION AND USABLE ON CODES(UOC)	(7) QTY
					GROUP 5217 REFRIGERANT PIPING	
					FIG. 282 REAR A/C CONDENSER AND TRAY ASSEMBLY	
* 1	PAFZZ	4130014605782	6W728	03-00333	EVAPORATOR COIL,REF..... UOC:XBB	1
* 2	PAFZZ	5310014664461	6W728	92-00007	NUT,PLAIN,HEXAGON..... UOC:XBB	4
* 3	PAFZZ	5340014602421	6W728	55-04205	BRACKET,MOUNTING..... UOC:XBB	1
* 4	PAFZZ	5305014652818	6W728	94-00004	SCREW,MACHINE..... UOC:XBB	12
* 5	PAFZZ		6W728	55-05258	BRACKET,MOUNTING..... UOC:XBB	1
					END OF FIGURE	

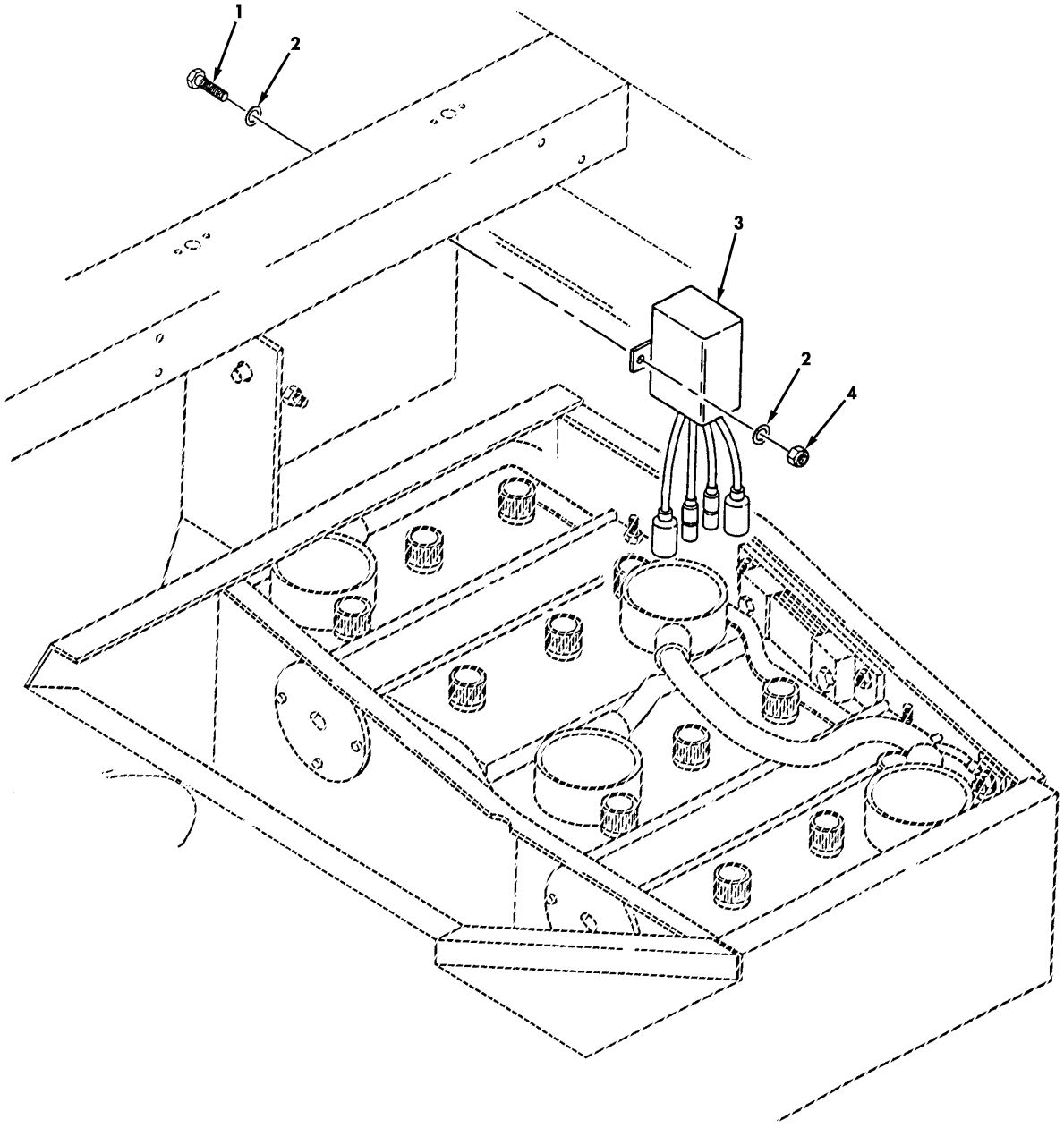

Figure 282A. A/C De-Ice Relays and Mounting Hardware.

(1) ITEM NO	(2) SMR CODE	(3) NSN	(4) CAGEC	(5) PART NUMBER	(6) DESCRIPTION AND USABLE ON CODES(UOC)	(7) QTY
					GROUP 5241 EVAPORATOR	
					FIG. 282A A/C DEICE RELAYS AND MOUNTING HARDWARE	
* 1	PAFZZ	5306014307399	6W728	4397000-006	BOLT,MACHINE..... UOC:XBB	4
* 2	PAFZZ	5310014357784	6W728	4397005-010	WASHER,FLAT..... UOC:XBB	8
* 3	PAFZZ	5945014130886	19207	12460116	RELAY,SOLID STATE..... UOC:XBB	2
* 4	PAFZZ	5310014398173	6W728	4397064-001	NUT,SELF-LOCKING..... UOC:XBB	4
					END OF FIGURE	

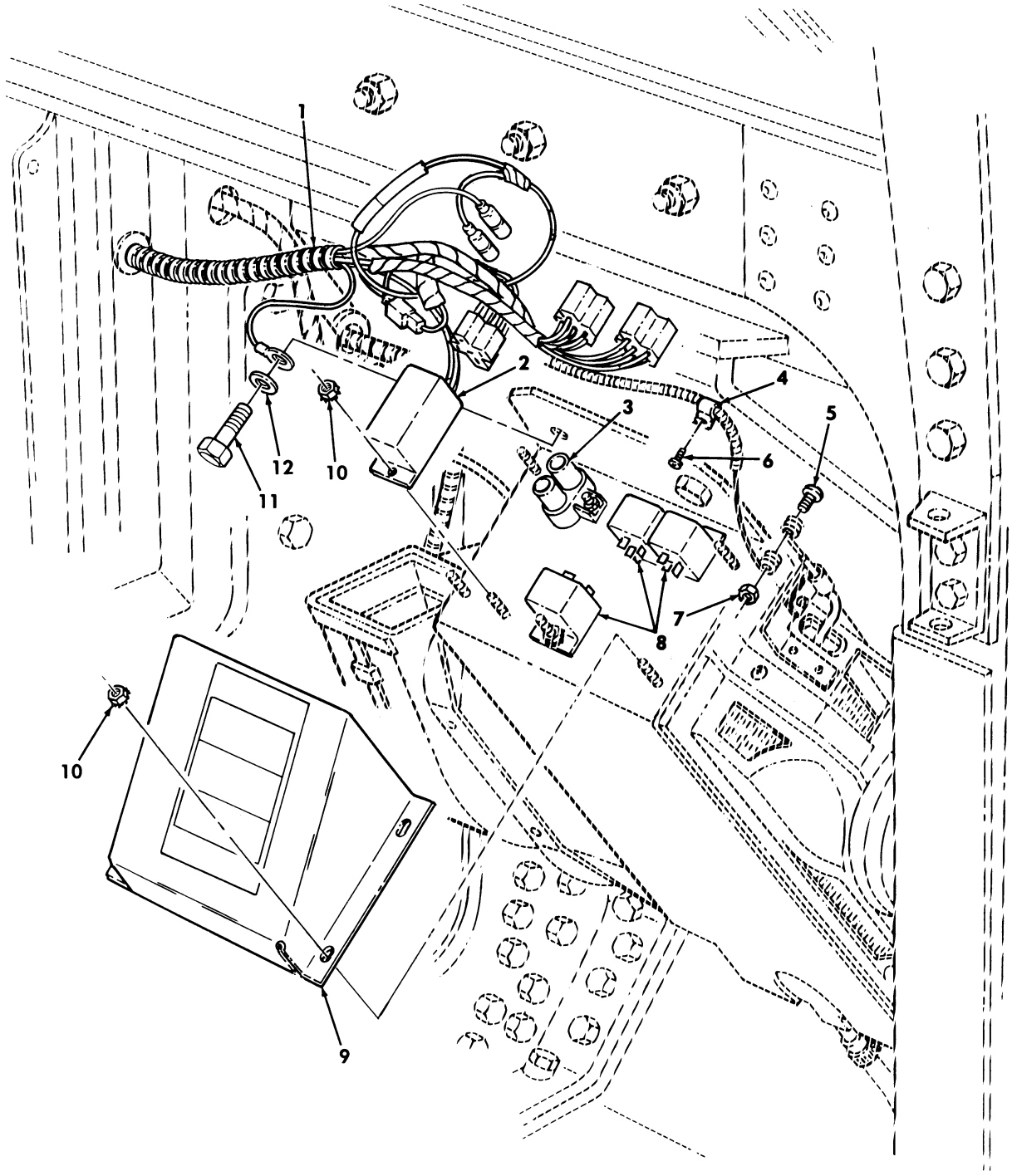

Figure 283. A/C Wiring Harness, Relays, Circuit Breaker, A/C Control Module, and Related Parts.

(1) ITEM NO	(2) SMR CODE	(3) NSN	(4) CAGEC	(5) PART NUMBER	(6) DESCRIPTION AND USABLE ON CODES(UOC)	(7) QTY
					GROUP 5241 EVAPORATOR	
					FIG. 283 A/C WIRING HARNESS, RELAYS, CIRCUIT BREAKER, A/C CONTROL MODULE, AND RELATED PARTS	
* 1	PAFZZ		6W728	70-06429	WIRING HARNESS,BRAN..... UOC:XBB	1
2	PAFZZ	5945014211784	6W728	44-00268	RELAY,SOLID STATE..... UOC:XBB	1
3	PAFZZ	5925008034424	96214	9115-5-20	CIRCUIT BREAKER..... UOC:XBB	1
4	PAFZZ	5340014210460	6W728	14-00693	CLIP,SPRING TENSION..... UOC:XBB	1
5	PAFZZ	5305014652814	6W728	4397089-039	SCREW,MACHINE .138-32 X .500..... UOC:XBB	1
6	PAFZZ	5305014381201	6W728	4397012-072	SCREW,MACHINE..... UOC:XBB	1
7	PAFZZ	5310014659608	6W728	4397073-001	NUT,SELF-LOCKING,HE..... UOC:XBB	1
8	PAFZZ	5945014211785	6W728	44-00267	RELAY,SOLID STATE..... UOC:XBB	3
9	PAFZZ	2510014599501	6W728	55-03892	PANEL,VEHICULAR OPE COVER..... UOC:XBB	1
10	PAFZZ	5310014664461	6W728	92-00007	NUT,PLAIN,HEXAGON..... UOC:XBB	10
* 11	PAFZZ	5305002253843	80204	B1821BH025C100N	SCREW,CAP,HEXAGON H 1/4-20 X 1.00.. UOC:XBB	2
12	PAFZZ	5310014357784	6W728	4397005-010	WASHER,FLAT..... UOC:XBB	2

END OF FIGURE

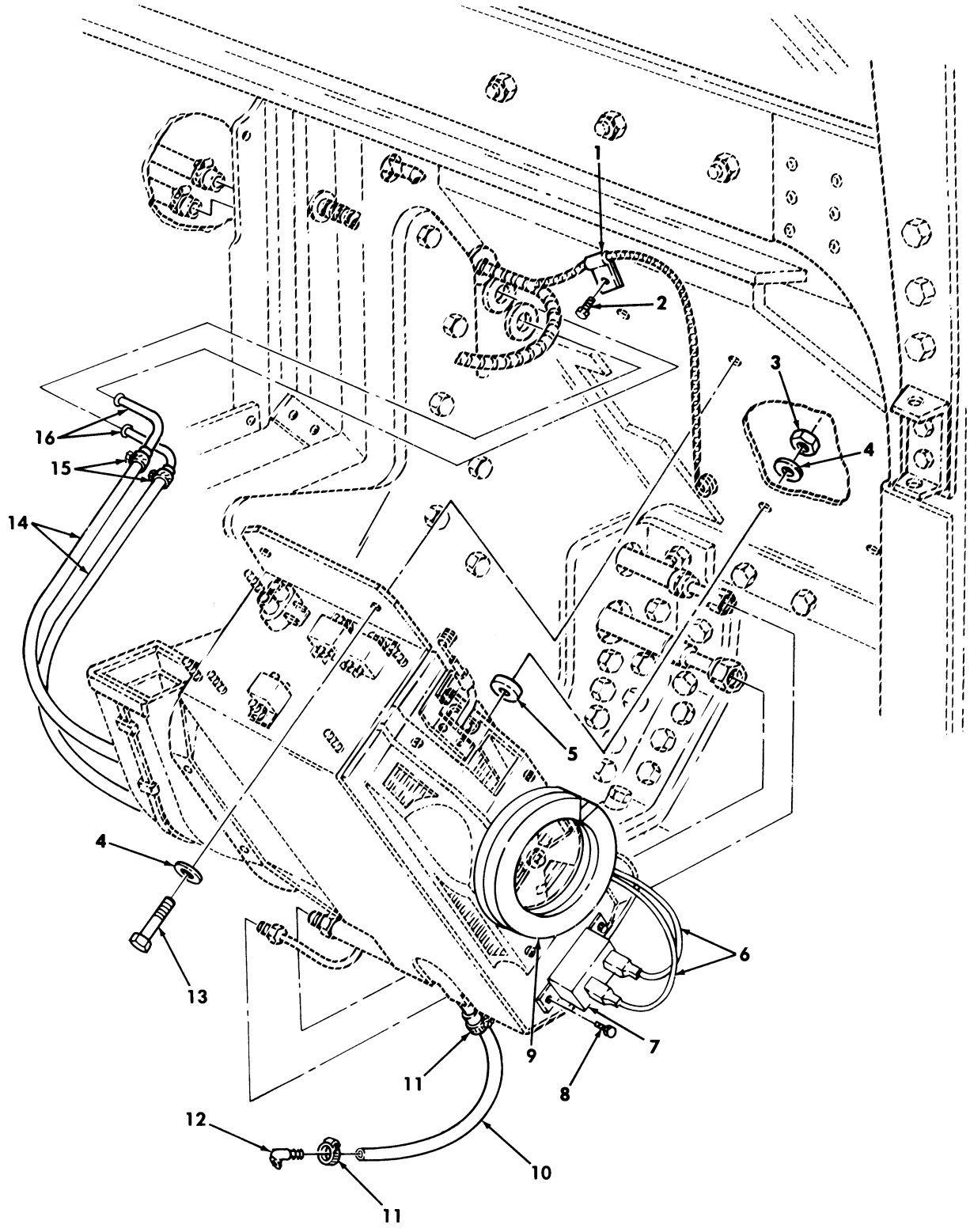

Figure 284. Front Evaporator/Heater Assembly Mounting and Related Parts.

(1) ITEM NO	(2) SMR CODE	(3) NSN	(4) CAGEC	(5) PART NUMBER	(6) DESCRIPTION AND USABLE ON CODES(UOC)	(7) QTY
					GROUP 5241 EVAPORATOR	
					FIG. 284 FRONT EVAPORATOR/HEATER ASSEMBLY MOUNTING AND RELATED PARTS	
1	PAFZZ	5340011345937	6W728	4668980-001	CLAMP,LOOP..... UOC:XBB	1
* 2	PAFZZ	5305000680508	80204	B1821BH025C075N	SCREW,CAP HEXAGON H 1/4-20 X 0.75.. UOC:XBB	1
3	PAFZZ	5310014398173	6W728	4397064-001	NUT,SELF-LOCKING,HE..... UOC:XBB	2
4	PAFZZ	5310014357784	6W728	4397005-010	WASHER,FLAT..... UOC:XBB	4
5	PAFZZ	5310014398181	6W728	4397083-001	WASHER,FLAT..... UOC:XBB	4
6	PAFZZ	6150014602427	6W728	12-01576	WIRING HARNESS,BRAN..... UOC:XBB	1
7	PAFZZ	6685014213549	6W728	11-00257	THERMOSTAT,FLOW CON..... UOC:XBB	1
8	PAFZZ	5305014206769	6W728	94-00031	SCREW,CAP,SOCKET HE..... UOC:XBB	2
9	PAFZZ	5330014568995	6W728	21-00713	GASKET..... UOC:XBB	1
10	MFFZZ		6W728	01-02420-AR	HOSE MAKE FROM HOSE, P/N 01-02420, LENGTH AS REQUIRED..... UOC:XBB	1
11	PAFZZ	4730014609074	6W728	21-00445	CLAMP,HOSE..... UOC:XBB	2
12	PAFZZ	4730014602425	6W728	01-04114	ELBOW,HOSE..... UOC:XBB	1
* 13	PAFZZ	5305002253843	80204	B1821BH025C100N	SCREW,CAP,HEXAGON H 1/4-20 X 1.00.. UOC:XBB	2
14	MFFZZ		6W728	31-00153-19	HOSE MAKE FROM HOSE, P/N 31-00153, 19 INCHES LONG..... UOC:XBB	2
15	PAFZZ	4730014204992	6W728	21-00103	CLAMP,HOSE..... UOC:XBB	4
16	PAFZZ	4710014203832	6W728	20-01460	TUBE,BENT,METALLIC..... UOC:XBB	2

END OF FIGURE

1 — 2 thru 7

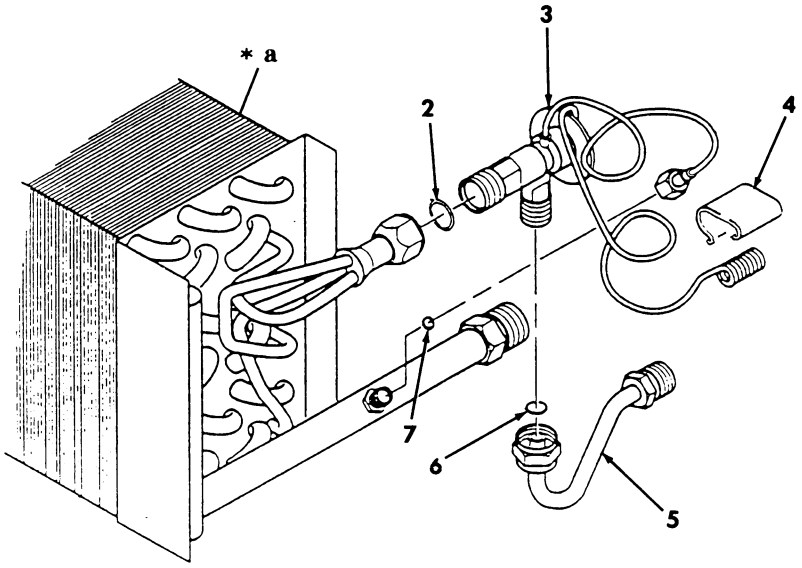

* a PART OF ITEM 1

Figure 285. Front Evaporator Expansion Valve.

(1) ITEM NO	(2) SMR CODE	(3) NSN	(4) CAGEC	(5) PART NUMBER	(6) DESCRIPTION AND USABLE ON CODES(UOC)	(7) QTY
					GROUP 5241 EVAPORATOR	
					FIG. 285 FRONT EVAPORATOR EXPANSION VALVE	
1	PAFZZ	4130014208312	6W728	70-04710	EVAPORATOR COIL,REF..... UOC:XBB	1
2	PAFZZ	5331014214960	6W728	33-00780	.O-RING #10 PART OF KIT P/N 70-04659..... UOC:XBB	1
3	PAFZZ	4820014225523	6W728	08-00257	.VALVE,EXPANSION PART OF KIT P/N 70-04659..... UOC:XBB	1
4	PAFZZ	5340014754027	6W728	08-00124	.CLAMP,LOOP PART OF KIT P/N 70-04659 UOC:XBB	1
5	PAFZZ	4710014205181	6W728	20-01487	.TUBE ASSEMBLY,METAL EXTENTION..... UOC:XBB	1
6	PAFZZ	5331014197754	6W728	33-00778	.O-RING #6 PART OF KIT P/N 70-04659 UOC:XBB	1
7	PAFZZ	5331014201795	6W728	33-00777	.O-RING #4 PART OF KIT P/N 70-04659 UOC:XBB	1

END OF FIGURE

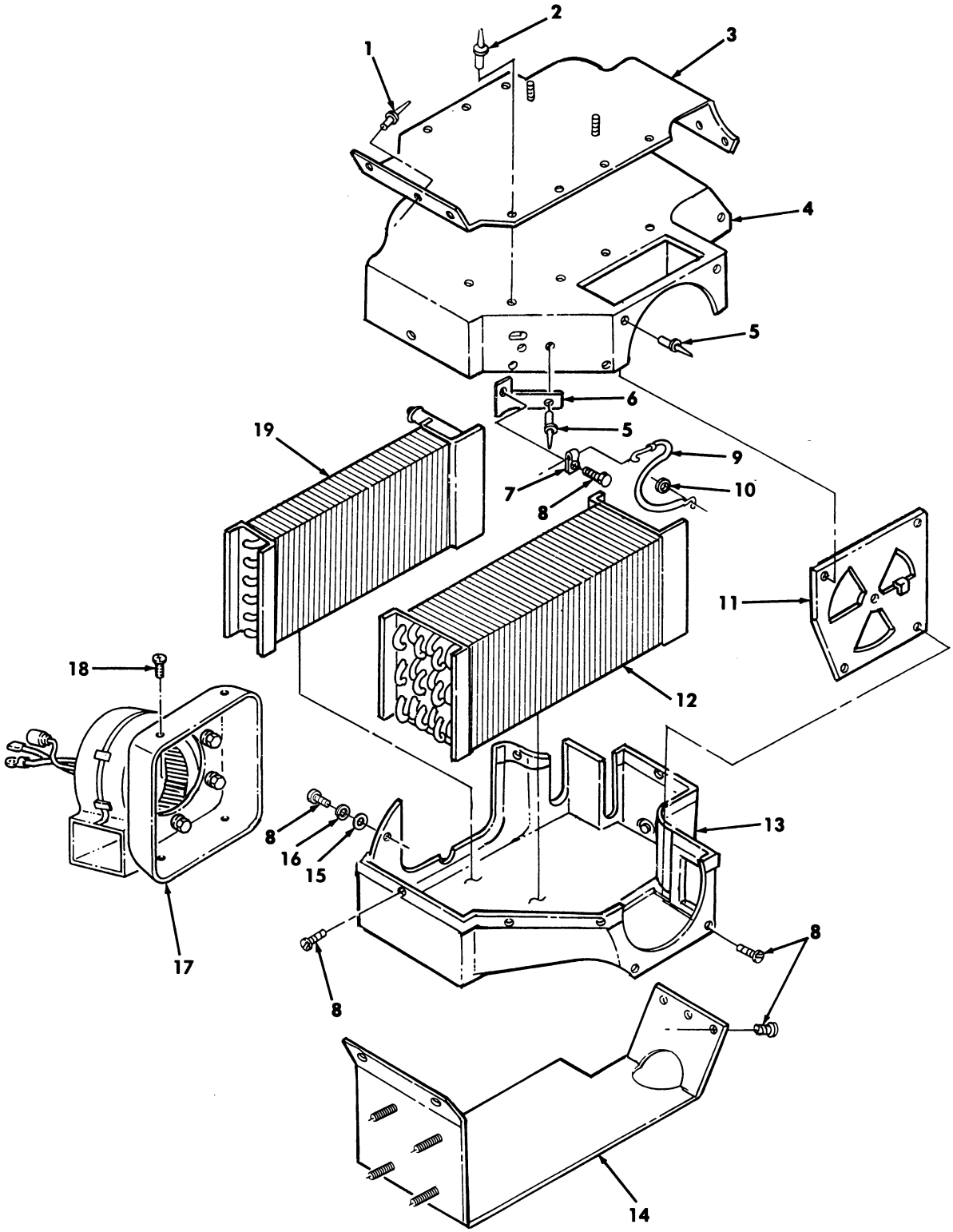

Figure 286. Front Evaporator/Heater, Case, and Related Parts.

(1) ITEM NO	(2) SMR CODE	(3) NSN	(4) CAGEC	(5) PART NUMBER	(6) DESCRIPTION AND USABLE ON CODES(UOC)	(7) QTY
					GROUP 5241 EVAPORATOR	
					FIG. 286 FRONT EVAPORATOR/HEATER, CASE,AND RELATED PARTS	
1	PAFZZ	5320014749677	6W728	96-00034	RIVET,SOLID..... UOC:XBB	6
2	PAFZZ	5320014221712	6W728	96-00035	RIVET,BLIND..... UOC:XBB	8
3	PAFZZ	5340014603306	6W728	55-04299	BRACKET,MOUNTING TOP..... UOC:XBB	1
4	PAFZZ	5340014629075	6W728	70-05263	COVER,ACCESS TOP..... UOC:XBB	1
5	PAFZZ	5320014221224	6W728	96-00010	RIVET,BLIND..... UOC:XBB	4
6	PAFZZ	5340014599500	6W728	55-03352	BRACKET,MOUNTING..... UOC:XBB	1
7	PAFZZ	5340014210460	6W728	14-00693	CLIP,SPRING TENSION..... UOC:XBB	1
8	PAFZZ	5305014206769	6W728	94-00031	SCREW,CAP SOCKET HE..... UOC:XBB	9
9	PAFZZ	2590014216754	6W728	14-01663	CONTROL ASSEMBLY,PU..... UOC:XBB	1
10	PAFZZ	5340014210461	6W728	93-00052	CLIP,SPRING TENSION..... UOC:XBB	1
11	PAFZZ	2540014603302	6W728	70-05237	VENTILATOR,AIR CIRC..... UOC:XBB	1
12	PAFZZ	4130014208312	6W728	70-04710	EVAPORATOR COIL,REF..... UOC:XBB	1
13	PAFZZ	2540014604952	6W728	01-05086	HOUSING,FAN BOTTOM..... UOC:XBB	1
14	PAFZZ	5340014604954	6W728	55-04300	BRACKET,MOUNTING BOTTOM..... UOC:XBB	1
15	PAFZZ	5310014717333	6W728	4397005-008	WASHER,FLAT..... UOC:XBB	1
16	PAFZZ	5310014341385	6W728	4397004-005	WASHER,LOCK..... UOC:XBB	1
17	PAFZZ	6105014604950	6W728	40-00410	MOTOR,DIRECT CURREN..... UOC:XBB	1
18	PAFZZ	5306014623335	6W728	22-00080	BOLT,SHOULDER..... UOC:XBB	4
* 19	PAFZZ	2930014315459	6W728	50-00335	CORE,RADIATOR HEATER..... UOC:XBB	1

END OF FIGURE

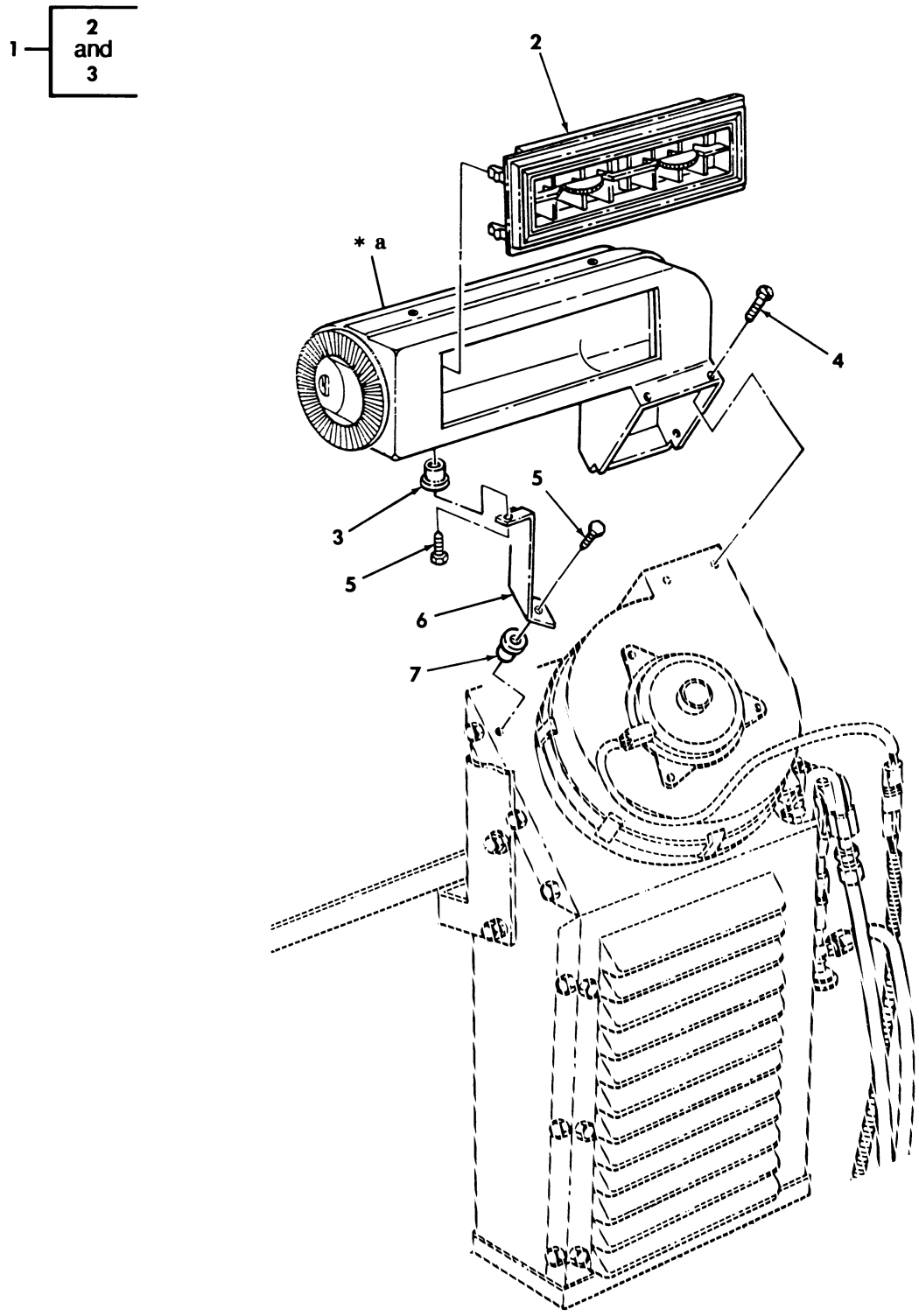

*a PART OF ITEM 1

Figure 287. Rear A/C Air Distribution Duct and Register.

(1) ITEM NO	(2) SMR CODE	(3) NSN	(4) CAGEC	(5) PART NUMBER	(6) DESCRIPTION AND USABLE ON CODES(UOC)	(7) QTY
					GROUP 5241 EVAPORATOR	
					FIG. 287 REAR A/C AIR DISTRIBUTION DUCT AND REGISTER	
1	PAFZZ	2540014615222	6W728	70-05429	DUCT ASSEMBLY,AIR C..... UOC:XBB	1
2	PAFZZ	2540014604953	6W728	01-05082	.VENTILATOR,AIR CIRC..... UOC:XBB	1
3	PAFZZ	5310014632124	6W728	92-00144	.NUT,PLAIN,KNURLED..... UOC:XBB	2
4	PAFZZ	5305014618225	6W728	94-00086	SCREW,TAPPING..... UOC:XBB	4
5	PAFZZ	5305014652813	6W728	91-00086	SCREW,MACHINE..... UOC:XBB	2
6	PAFZZ	5340014602443	6W728	55-03880	BRACKET,MOUNTING..... UOC:XBB	1
7	PAFZZ	5310014632122	6W728	92-00145	NUT,PLAIN,KNURLED..... UOC:XBB	1

END OF FIGURE

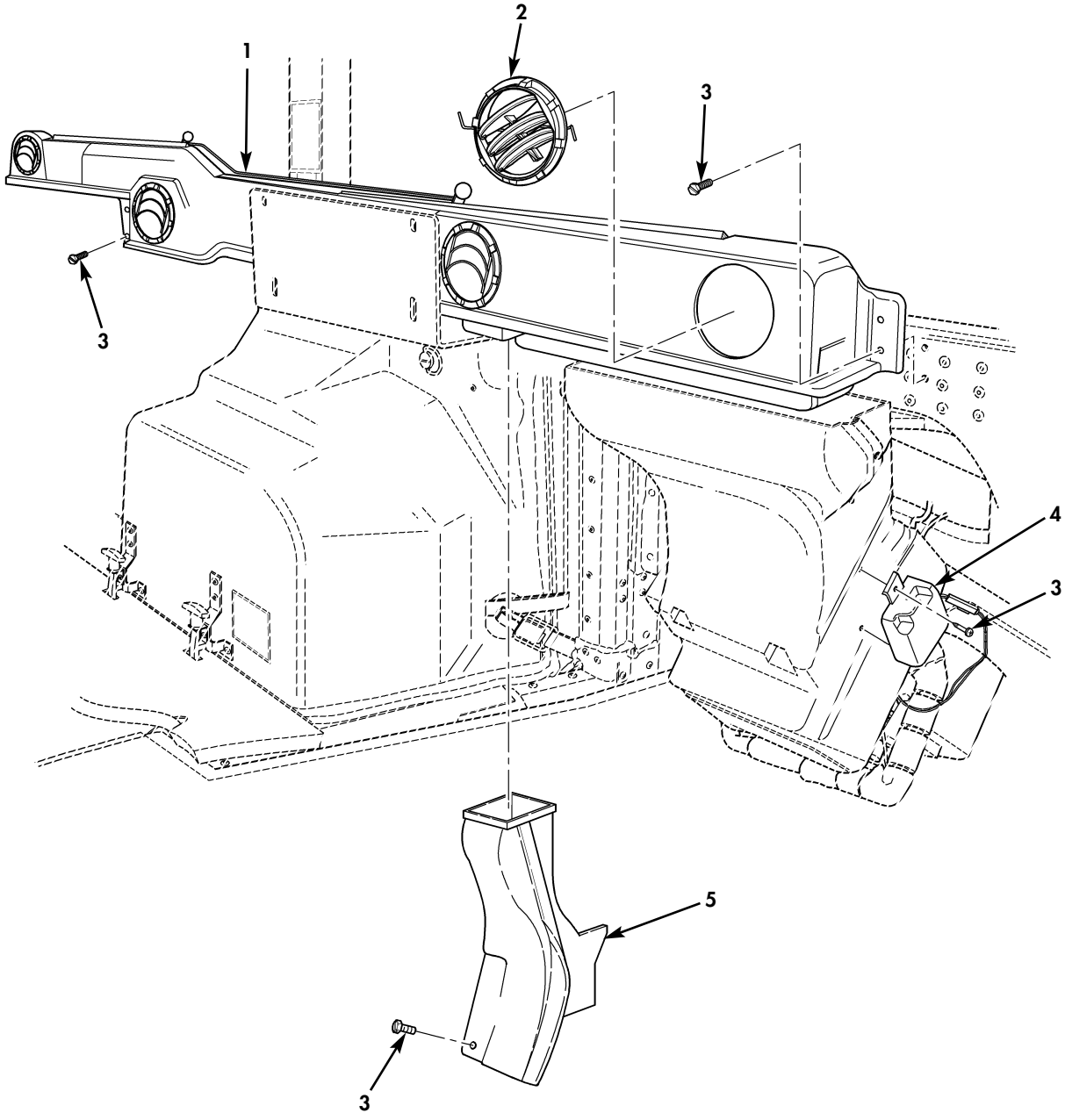

Figure 287A. Front A/C Assembly (Sheet 1 of 2).

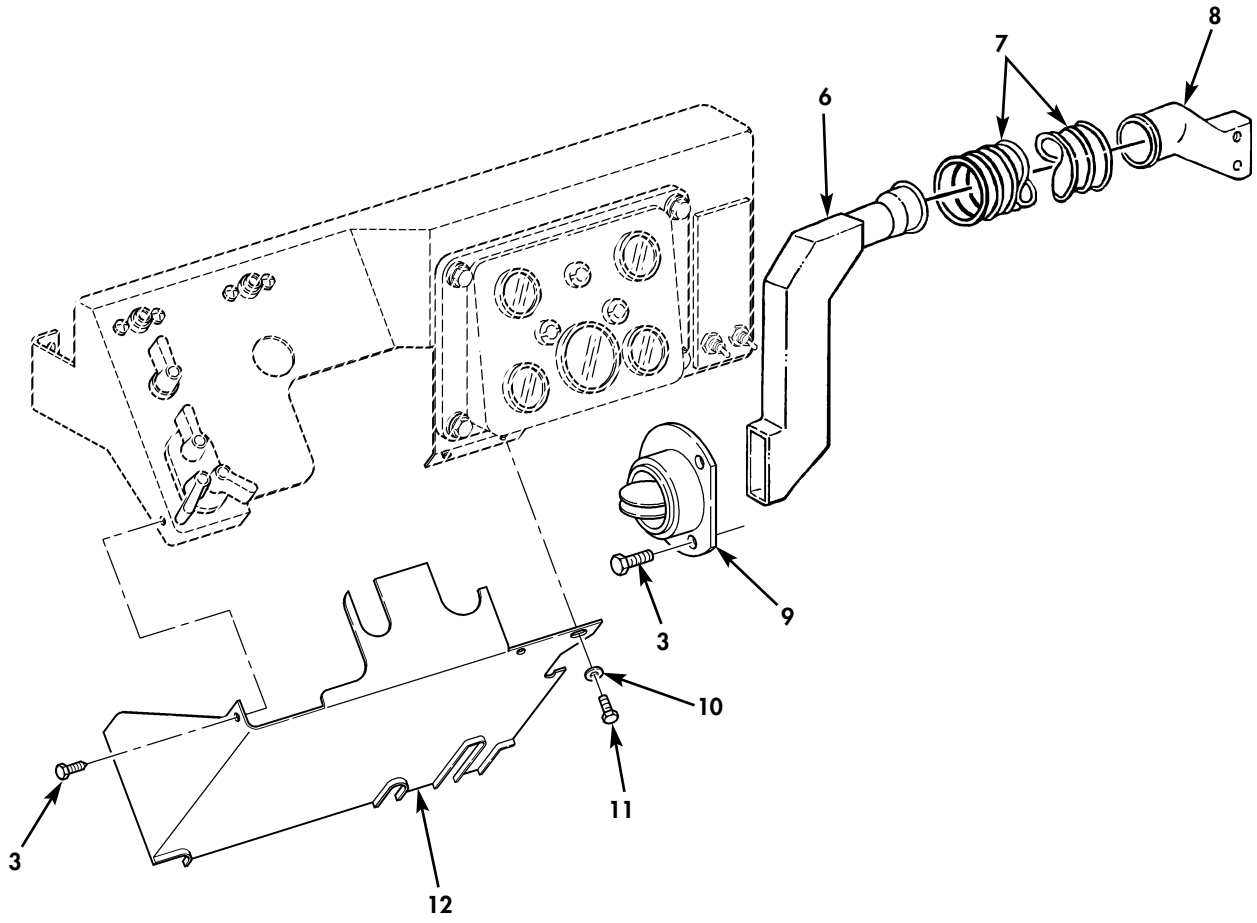

Figure 287A. Front A/C Assembly (Sheet 2 of 2).

(1) ITEM NO	(2) SMR CODE	(3) NSN	(4) CAGEC	(5) PART NUMBER	(6) DESCRIPTION AND USABLE ON CODES(UOC)	(7) QTY
					GROUP 5241 EVAPORATOR	
					FIG. 287A FRONT A/C ASSEMBLY	
* 1	PAOZZ	4720015363749	34623	6015460	HOSE,AIR DUCT..... UOC:TTA,TTT,TT1,UUA,UUU,UU1,UU2	1
* 2	PAOZZ	2540015363029	34623	6015614	VENTILATOR,AIR CIRC..... UOC:TTA,TTT,TT1,UUA,UUU,UU1,UU2	4
* 3	PAOZZ	5305010065736	19207	12342499-3	SCREW,TAPPING #10..... UOC:TTA,TTT,TT1,UUA,UUU,UU1,UU2	6
* 4	PAOZZ	6685015397057	34623	6015616	THERMOSTAT,FLOW CONT..... UOC:TTA,TTT,TT1,UUA,UUU,UU1,UU2	1
* 5	PAOZZ	2540015489680	34623	4108959	ASSEMBLY,FLOOR DUCT..... UOC:TTA,TTT,TT1,UUA,UUU,UU1,UU2	1
* 6	PAOZZ	2540014748562	19207	12447047	HOUSING,HEATING DIR L.H. UOC:TTA,TTT,TT1,UUA,UUU,UU1,UU2	1
* 7	PAOZZ	2540015489360	34623	6011076	ASSEMBLY,AIR DUCT..... UOC:TTA,TTT,TT1,UUA,UUU,UU1,UU2	1
* 8	PAOZZ	2540014445340	19207	12447050	HOUSING,AIR INTAKE..... UOC:TTA,TTT,TT1,UUA,UUU,UU1,UU2	1
* 9	PAOZZ	2540015500862	34623	6015668	BEZEL,DRIVER SIDE..... UOC:TTA,TTT,TT1,UUA,UUU,UU1,UU2	1
* 10	PAOZZ	5310005501130	80205	MS35333-40	WASHER,FLAT..... UOC:TTA,TTT,TT1,UUA,UUU,UU1,UU2	2
* 11	PAOZZ	5305009881725	80205	NASM35206-281	SCREW..... UOC:TTA,TTT,TT1,UUA,UUU,UU1,UU2	2
* 12	PAOZZ	5340015483174	34623	6015553	CLOSEOUT PANEL DRIVER SIDE..... UOC:TTA,TTT,TT1,UUA,UUU,UU1,UU2	1

END OF FIGURE

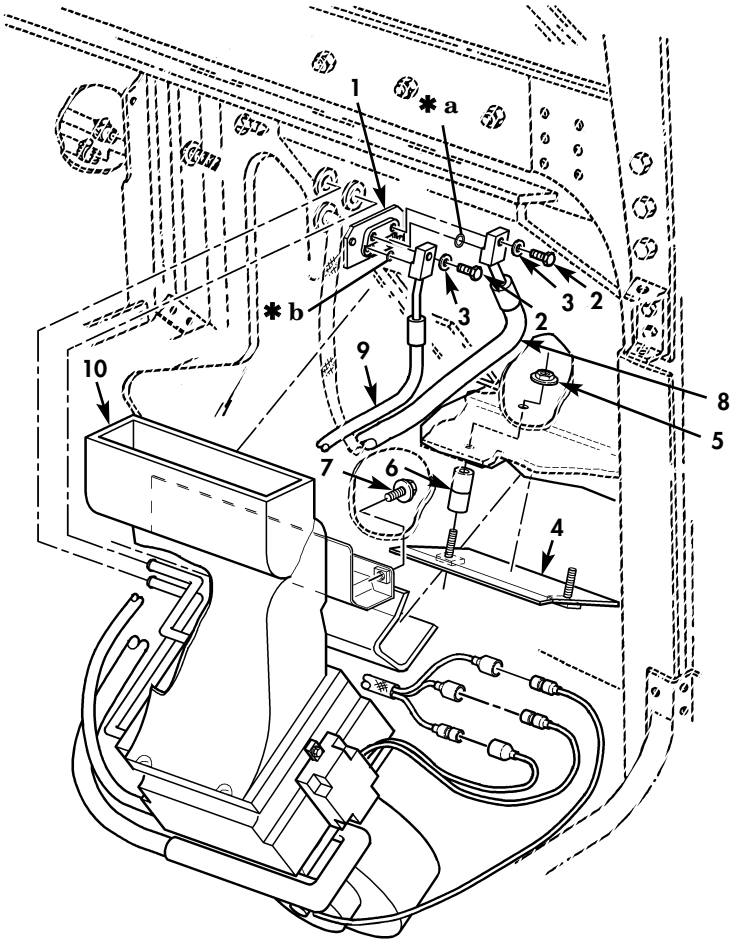

✱**a** PART OF ITEM 8
✱**b** PART OF ITEM 9

Figure 287B. Front A/C Evaporator Assembly.

(1) ITEM NO	(2) SMR CODE	(3) NSN	(4) CAGEC	(5) PART NUMBER	(6) DESCRIPTION AND USABLE ON CODES(UOC)	(7) QTY
					GROUP 5241 EVAPORATOR	
					FIG. 287B FRONT A/C EVAPORATOR ASSEMBLY	
* 1	PAFZZ	5340015363003	34623	6015469	PLATE,RETAINING SEA..... UOC:TTA,TTT,TT1,UUA,UUU,UU1,UU2	1
* 2	PAFZZ	5305000680509	80204	B1821BH025C125N	SCREW,CAP,HEXAGON H 1/4-20 X 1.25.. UOC:TTA,TTT,TT1,UUA,UUU,UU1,UU2	2
* 3	PAFZZ	5310015825965	80205	MS35338-44	WASHER,LOCK 1/4..... UOC:TTA,TTT,TT1,UUA,UUU,UU1,UU2	2
* 4	PAFZZ	5340015363290	34623	6015669	BRACKET,MOUNTING..... UOC:TTA,TTT,TT1,UUA,UUU,UU1,UU2	1
* 5	PAFZZ	5310015362964	34623	6015660	WASHER,FLAT 1/4..... UOC:TTA,TTT,TT1,UUA,UUU,UU1,UU2	2
* 6	PAFZZ	5365015394098	34623	6015662	SPACER,NYLON 1/2..... UOC:TTA,TTT,TT1,UUA,UUU,UU1,UU2	2
* 7	PAFZZ	5305015394101	34623	6015663	SCREW,MACHINE..... UOC:TTA,TTT,TT1,UUA,UUU,UU1,UU2	2
* 8	PAFZZ	4720015362985	34623	6015585	HOSE ASSEMBLY #10 FRONT SEAL PLATE TO EVAPORATOR..... UOC:TTA,TTT,TT1,UUA,UUU,UU1,UU2	1
* 9	PAFZZ	4720015363065	34623	6015586	HOSE ASSEMBLY #6 FRONT EVAPORATOR TO SEAL PLATE..... UOC:TTA,TTT,TT1,UUA,UUU,UU1,UU2	1
* 10	PAFZZ	4120015374995	34623	6015461	AIR CONDITIONER..... UOC:TTA,TTT,TT1,UUA,UUU,UU1,UU2	1

END OF FIGURE

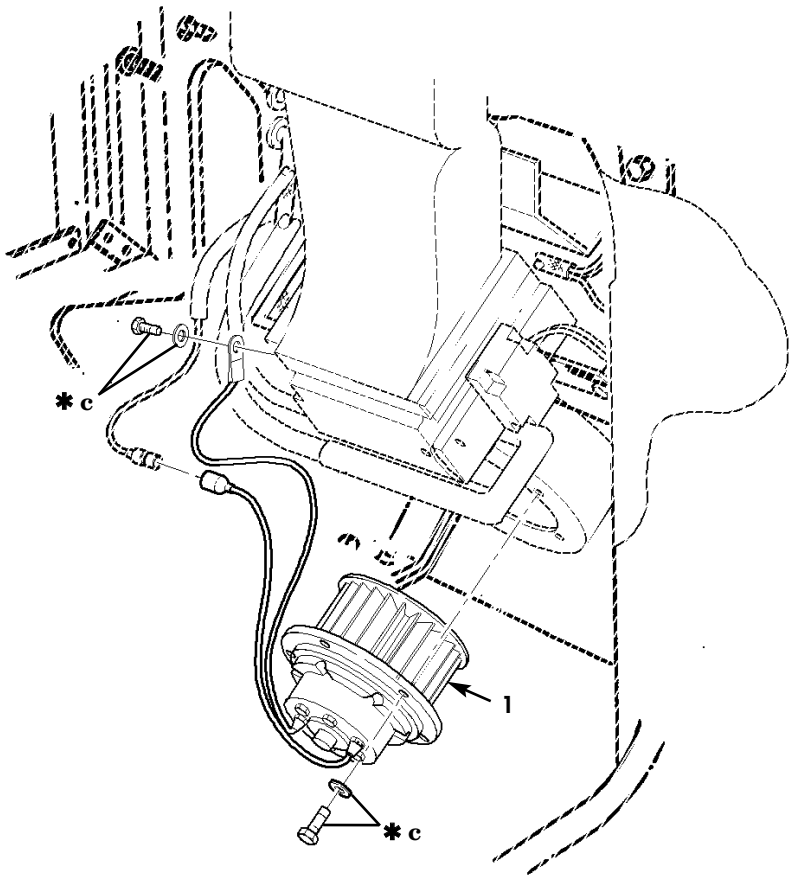

✱**c** PART OF ITEM 1

Figure 287C. Front A/C Blower Motor.

(1) ITEM NO	(2) SMR CODE	(3) NSN	(4) CAGEC	(5) PART NUMBER	(6) DESCRIPTION AND USABLE ON CODES(UOC)	(7) QTY
					GROUP 5241 EVAPORATOR	
					FIG. 287C FRONT A/C BLOWER MOTOR	
* 1	PAOZZ	2930015363009	34623	6015596	BLOWER,ENGINE COOLI 24 VOLT..... UOC:TTA,TTT,TT1,UUA,UUU,UU1,UU2	1
					END OF FIGURE	

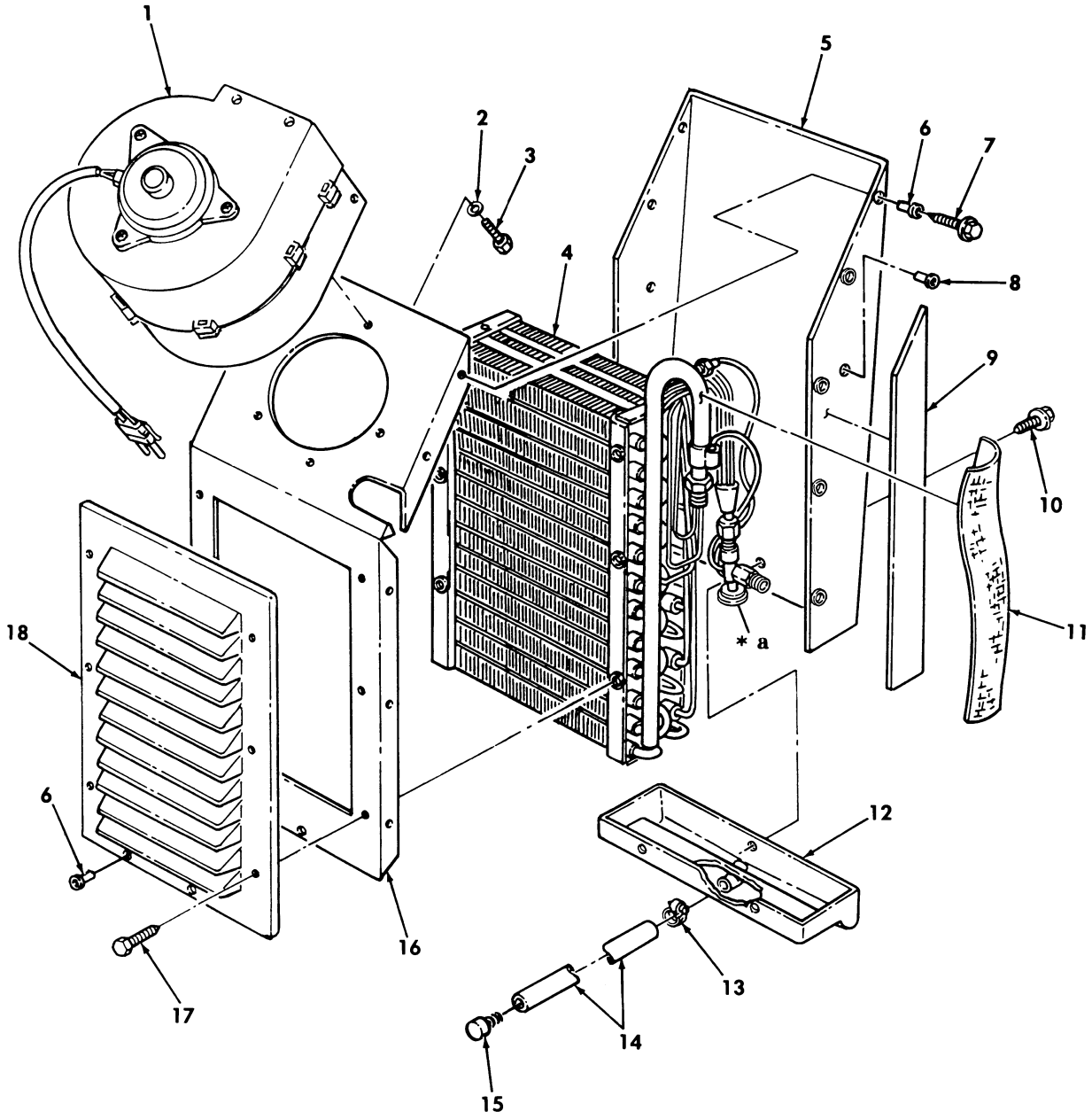

*** a** SEE FIGURE 285, ITEM 3

Figure 288. Rear A/C Evaporator Assembly.

(1) ITEM NO	(2) SMR CODE	(3) NSN	(4) CAGEC	(5) PART NUMBER	(6) DESCRIPTION AND USABLE ON CODES(UOC)	(7) QTY
					GROUP 5241 EVAPORATOR	
					FIG. 288 REAR A/C EVAPORATOR ASSEMBLY	
1	PAFZZ	6105014604951	6W728	70-05287	MOTOR,DIRECT CURREN..... UOC:XBB	1
2	PAFZZ	5310014655109	6W728	93-00045	WASHER,LOCK..... UOC:XBB	5
3	PAFZZ	5306014623335	6W728	22-00080	BOLT,SHOULDER..... UOC:XBB	5
4	PAFZZ	4130014604956	6W728	70-05428	EVAPORATOR COIL,REF..... UOC:XBB	1
5	PAFZZ	2510014604955	6W728	55-04030	COVER,AIR EVAPORATO..... UOC:XBB	1
6	PAFZZ	5310014632122	6W728	92-00145	NUT,PLAIN,KNURLED..... UOC:XBB	17
7	PAFZZ	5305014652811	6W728	91-00160	SCREW,MACHINE..... UOC:XBB	11
8	PAFZZ	5325013951247	78276	ALS7-420-260	INSERT,SCREW THREAD..... UOC:XBB	4
9	PAFZZ	9320014751646	6W728	21-00607	GASKET..... UOC:XBB	1
10	PAFZZ	5305014652813	6W728	91-00086	SCREW,MACHINE..... UOC:XBB	4
* 11	PAFZZ	5999014286813	07700	21-00006	WIRE MESH,KNITTED..... UOC:XBB	1
12	PAFZZ	4940014617809	6W728	01-05083	PAN,DRIP..... UOC:XBB	1
13	PAFZZ	4730014609074	6W728	21-00445	CLAMP,HOSE..... UOC:XBB	1
14	MFFZZ		6W728	01-02420-AR	HOSE,NONMETALLIC MAKE FROM HOSE,P/N 01-02420,LENGTH AS REQUIRED..... UOC:XBB	1
15	PAFZZ	4730014604960	6W728	01-02078	RESTRICTOR,FLUID FL..... UOC:XBB	1
16	PAFZZ	2510014602452	6W728	55-03873	PANEL,VEHICULAR OPE..... UOC:XBB	1
17	PAFZZ	5305014618147	6W728	94-00077	SCREW,TAPPING..... UOC:XBB	6
18	PAFZZ	2540014604957	6W728	01-05133	VENTILATOR,AIR CIRC..... UOC:XBB	1

END OF FIGURE

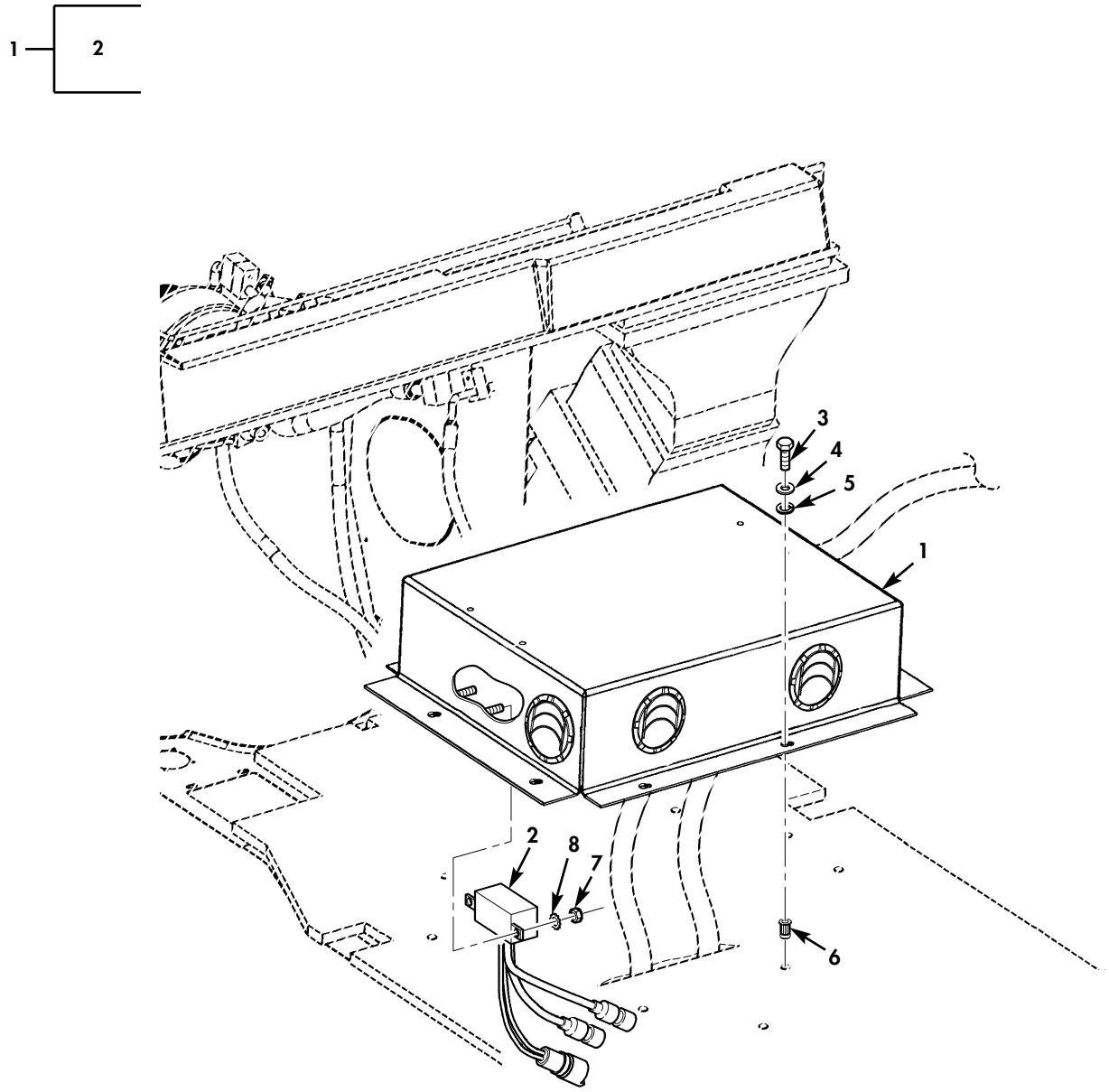

Figure 288A. Rear Evaporator.

(1) ITEM NO	(2) SMR CODE	(3) NSN	(4) CAGEC	(5) PART NUMBER	(6) DESCRIPTION AND USABLE ON CODES(UOC)	(7) QTY
					GROUP 5241 REAR A/C EVAPORATOR ASSEMBLY	
					FIG. 288A REAR EVAPORATOR	
* 1	PAFZZ	4130015374404	34623	6019787	PARTS KIT,AIR CONDI..... UOC:TTA,TTT,TT1,UU1,UU2	1
* 2	PAOZZ	5945015366091	34623	6013654	.RELAY,SOLID STATE 24V..... UOC:TTA,TTT,TT1,UU1,UU2	1
* 3	PAOZZ	5305000712509	80204	B1821BH025C150N	SCREW,CAP,HEXAGON H 1/4-20 X 1.50.. UOC:TTA,TTT,TT1,UU1,UU2	8
* 4	PAOZZ	5310005825965	80205	MS35338-44	WASHER,LOCK 1/4..... UOC:TTA,TTT,TT1,UU1,UU2	8
* 5	PAOZZ	5310011023270	24617	2436161	WASHER,FLAT 1/4..... UOC:TTA,TTT,TT1,UU1,UU2	8
* 6	PAOZZ	5310015212135	6W728	4397050-025	NUT,PLAIN,BLIND RIV 1/4-20..... UOC:TTA,TTT,TT1,UU1,UU2	8
* 7	PAOZZ	5310002514503	24617	9411893	NUT,SELF-LOCKING #10-32..... UOC:TTA,TTT,TT1,UU1,UU2	2
* 8	PAOZZ	5310004022778	24617	9416128	WASHER,FLAT . #10..... UOC:TTA,TTT,TT1,UU1,UU2	2

END OF FIGURE

(1) ITEM NO	(2) SMR CODE	(3) NSN	(4) CAGEC	(5) PART NUMBER	(6) DESCRIPTION AND USABLE ON CODES(UOC)	(7) QTY
					GROUP 94 KITS	
					9401 SERVICE KITS	
					FIG. KITS	
1	PAOZZ	2910012184489	53964	A630003	PARTS KIT,FILTER.....	1
					BOLT (3) 31-3	
					WASHER (3) 31-4	
2	PAOZZ	4330011903579	34623	A910044	FILTER ELEMENT,FLUI.....	1
					FILTER ELEMENT,FLUI (1) 31-7	
					O-RING (1) 31-8	
* 2A	PAOZZ		K5667	HE1280136	PARTS KIT,VALVE.....	1
					O-RING (1) 138B-4	
					VALVE ASSEMBLY (1) 138B-5	
					SPRING (1) 138B-6	
3	PAFZZ	5977011894988	24975	MFJ-2012BS	BRUSH SET,ELECTRICA STARTER MOTOR..	1
					BRUSH STARTER MOTOR (4) 50-46	
4	PAFZZ	5360011907234	68505	MFY-19S	SPRING SET GENERATOR.....	1
					SPRING BRUSH (4) 50-48	
5	PAFZZ	2920011924474	68505	SAT-1004FS	PARTS KIT,ENGINE GE GENERATOR.....	1
					COVER AND CONTACT (1) 50-31	
					GASKET (1) 50-32	
* 6	PAOZZ	2590015251995	0ZM57	STA007-05	KIT,SPARE TIRE	1
					UOC:TTA,TTT,TT1,UUA,UUU,UU1,UU2	
					BOLT,MACHINE (4) 150A-27	
					BRACKET,LEVER (1) 150A-11	
					BRACKET,MOUNTING (1) 150A-15	
					BRACKET,MOUNTING (1) 150A-22	
					COUPLING,SHAFT,FLEX (1) 150A-5	
					FITTING,LUBRICATION (1) 150A-13	
					JACK,RATCHET,DRIVIN (1) 150A-2	
					NUT,PLAIN,HEXAGON H (4) 150A-25	
					NUT,SELF-LOCKING,CO (1) 150A-31	
					NUT,SELF-LOCKING,HE (1) 150A-8	
					NUT,SELF-LOCKING,HE (1) 150A-9	
					NUT,SELF-LOCKING,HE (6) 150A-23	
					PIN,LOCK (1) 150A-24	
					PIN,LOCK (1) 150A-28	
					PIN,SPRING (1) 150A-29	
					PIN,SRAIGHT,HX,HEAD (1) 150A-30	
					RETAINER,SPARE TIRE (1) 150A-26	
					SCREW,CAP,HEXAGON H (1) 150A-1	
					SCREW,CAP,HEXAGON H (1) 150A-4	
					SCREW,CAP,HEXAGON H (1) 150A-20	
					SCREW,CAP,HEXAGON H (1) 150A-12	
					SCREW,CAP,HEXAGON H (2) 150A-21	
					SCREW,CAP,HEXAGON H (4) 150A-17	
					SPACER,RING (2) 150A-14	
					WASHER,FLAT (1) 150A-7	
					WASHER,FLAT (1) 150A-18	
					WASHER,FLAT (13) 150A-16	
					WASHER,FLAT (2) 150A-10	
					WASHER,LOCK (1) 150A-19	
					WIRE,ROPE ASSEMBLY (2) 150A-3	
					WRENCH,OPEN END (1) 150A-6	

(1) ITEM NO	(2) SMR CODE	(3) NSN	(4) CAGEC	(5) PART NUMBER	(6) DESCRIPTION AND USABLE ON CODES(UOC)	(7) QTY
* 7	PAFZZ	2530011797511	34281	104870-01	PARTS KIT,BRAKE CAL SERVICE BRAKE..	1
					BOOT,VEHICULAR COM (1) 125-10	
					GASKET (1) 125-8	
* 8	PAFZZ	5330013788646	7X677	12514591-RB-1253 2530	PARTS KIT,GASKET SET.....	1
					GASKET (1) 11-7	
					GASKET (1) 19-2	
					GASKET (1) 19-4	
					GASKET (1) 20-1	
					SEAL,PLAIN (1) 4-5	
					SEAL,PLAIN,ENCASED (1) 9-7	
* 9	PAFZZ	5330014379216	7X677	12531704	GASKET SET.....	1
					GASKET (2) 15-6	
* 10	PAFZZ	2815014348603	7X677	12456409	PARTS KIT,CYLINDER HEAD REPAIR.....	1
					GASKET (2) 3-8	
					GASKET (8) 18-2	
					GASKET (1) 39-2	
					GASKET (2) 39-12	
					GASKET (2) 15-6	
					SEAL INLET (16) 7-8	
					SEAL,PLAIN (8) 7-10	
* 11	PAHZZ	3120014178084	01212	1496M	PARTS KIT,BEARING R.....	1
					BEARING,SLEEVE (1) 8-9	
					BEARING,SLEEVE (1) 8-10	
					BEARING,SLEEVE (1) 8-11	
					BEARING,SLEEVE (1) 8-12	
					PARTS KIT,BEARING R(1) 8-13	
* 12	PAOZZ	2540015425419	62323	2005160-3	PARTS KIT,SEAT BELT.....	1
					BELT,VEHICULAR (2) 220A-2	
					BELT,VEHICULAR (1) 220A-15	
					BELT,VEHICULAR (1) 220A-15	
					BRACKET,MOUNTING (1) 220A-4	
					BRACKET,MOUNTING (1) 220A-4	
					BRACKET,MOUNTING (1) 220A-9	
					BRACKET,MOUNTING (1) 220A-9	
					BRACKET,MOUNTING (2) 220A-16	
					BRACKET,MOUNTING (2) 220A-17	
					BUCKLE (2) 220A-13	
* 13	PAOZZ	5340015425867	62323	2005187-1	PARTS KIT,BOLT AND SPACER.....	1
					NUT,SELF LOCKING (2) 220A-7	
					NUT,SELF LOCKING (2) 220A-8	
					SCREW,CAP,HEXAGON H(2) 220A-1	
					SCREW,CAP,HEXAGON H(8) 220A-6	
					SCREW,CAP,HEXAGON H(2) 220A-11	
					SCREW,CAP,HEXAGON H(2) 220A-12	
					SCREW,CAP,HEXAGON H(2) 220A-14	
					WASHER,FLAT (2) 220A-3	
					WASHER,FLAT (2) 220A-18	
* 14	PAOZZ		62826	2390086	PARTS KIT,AXLE,VEHI PLUNGE JOINT...	1
					INSERT (1) 110-11	
					INSERT (1) 115-11	
					JOINT,PLUNGE (1) 110-12	
					JOINT,PLUNGE (1) 115-12	
					RING,RETAINING (2) 110-6	
					RING,SPACER (2) 110-5	
					RING,SPACER (2) 115-5	
					SPIDER ASSEMBLY (1) 110-10	
					SPIDER ASSEMBLY (1) 115-10	

(1) ITEM NO	(2) SMR CODE	(3) NSN	(4) CAGEC	(5) PART NUMBER	(6) DESCRIPTION AND USABLE ON CODES(UOC)			(7) QTY
* 15	PAHZZ	4820014748911	7X677	24200418	PARTS KIT,PRESSURE.....			1
					PIN	(1)	95-1	
					PISTON	(1)	95-4	
					SEAL RING,METAL	(1)	95-3	
					WASHER,SLOTTED	(1)	95-2	
* 16	PAHZZ	2520014595454	7X677	24200789	PARTS KIT,TRANSMISS FOURTH CLUTCH HOUSING.....			1
					BOLT,MACHINE	(1)	88-13	
					HOUSING,FRICTION CL	(1)	94-24	
* 17	PAHZZ	5330014107229	7X677	24202111	PARTS KIT,SEAL REPL 1996.....			1
					BOLT,MACHINE	(7)	98-1	
					FILTER ELEMENT,FLUI	(1)	96-1	
					GASKET	(1)	89-7	
					GASKET	(1)	95-15	
					GASKET	(1)	95-18	
					GASKET	(1)	97-8	
					GASKET	(1)	97-10	
					GASKET	(1)	97-25	
					GASKET	(1)	98-30	
					PARTS KIT,HYDRAULIC	(1)	88-15	
					SEAL,PLAIN	(1)	98-4	
					SEAL,PLAIN,ENCASED	(1)	88-14	
* 18	PAHZZ	2520014824280	7X677	24204278	PARTS KIT,HYDRAULIC 1997 AND ABOVE.			1
					GASKET	(1)	88-20	
					MAGNET,CLIP,COLLECT	(1)	88-16	
					PAN,TRANSMISSION	(1)	88-18	
					PLUG,DRAIN	(1)	88-21	
* 19	PAHZZ	5330013983724	7X677	24204441	KIT,TRANSMISSION 1996 OVERHAUL EARLY MODELS.....			1
					BOLT,MACHINE	(1)	88-12	
					BOLT,MACHINE	(1)	88-13	
					BOLT,MACHINE	(7)	98-1	
					DISK,CLUTCH	(5)	91-3	
					DISK,CLUTCH	(5)	92-16	
					DISK,CLUTCH	(3)	94-18	
					DISK,CLUTCH	(4)	94-20	
					FILTER,FORCE FEED	(1)	96-1	
					GASKET	(1)	89-7	
					GASKET	(1)	95-18	
					GASKET	(1)	95-15	
					GASKET	(1)	97-8	
					GASKET	(1)	97-10	
					GASKET	(1)	97-25	
					O-RING	(1)	94-22	
					O-RING	(1)	94-26	
					O-RING	(2)	98-32	
					PACKING,PREFORMED	(1)	93-13	
					PACKING,PREFORMED	(1)	93-14	
					PARTS KIT,HYDRAULIC	(1)	88-15	
					RETAINER,PACKING	(4)	93-15	
					SEAL,DIRECT,CLUTCH	(1)	91-5	
					SEAL,INNER	(1)	92-4	

(1) ITEM NO	(2) SMR CODE	(3) NSN	(4) CAGEC	(5) PART NUMBER	(6) DESCRIPTION AND USABLE ON CODES(UOC)			(7) QTY
					SEAL,INNER	(1)	92-5	
					SEAL,OUTER	(1)	92-6	
					SEAL,PISTON,INNER	(1)	91-7	
					SEAL,PISTON,OUTER	(1)	91-6	
					SEAL,PLAIN	(1)	88-7	
					SEAL,PLAIN	(2)	94-4	
					SEAL,PLAIN	(1)	98-4	
					SEAL,PLAIN,ENCASED	(1)	88-14	
					SEAL,PLAIN,ENCASED	(2)	94-1	
					SEAL,RING	(1)	95-3	
* 20	PAHZZ		7X677	24204449	PARTS KIT,PISTON.....			1
					PACKING,PREFORMED	(1)	93-13	
					PACKING,PREFORMED	(1)	93-14	
* 21	PAFZZ	1005000499324	7X677	24204472	VERNIER ASSEMBLY.....			1
					LEVER,REMOTE	(1)	89-5	
					SHAFT	(1)	89-6	
* 22	PAHZZ	3040014621286	7X677	24205250	PISTON,LINEAR ACTUA.....			1
					PISTON	(1)	95-12	
					RING,OIL SEAL	(1)	95-11	
					RING,OIL SEAL	(1)	95-14	
* 23	PAHZZ	5330014422874	7X677	24205251	PARTS KIT,SEAL REPL 1996 OVERHAUL..			1
					BOLT,MACHINE	(1)	88-12	
					BOLT,MACHINE	(1)	88-13	
					BOLT,MACHINE	(7)	98-1	
					DISK,CLUTCH	(5)	91-3	
					DISK,CLUTCH	(5)	92-16	
					DISK,CLUTCH	(1)	93-7	
					DISK,CLUTCH	(3)	94-18	
					DISK,CLUTCH	(4)	94-20	
					FILTER,ELEMENT	(1)	96-1	
					GASKET	(1)	89-7	
					GASKET	(1)	95-15	
					GASKET	(1)	95-18	
					GASKET	(1)	97-8	
					GASKET	(1)	97-25	
					GASKET	(1)	98-30	
					O-RING	(1)	94-22	
					O-RING	(1)	94-26	
					O-RING	(2)	98-32	
					PACKING,PREFORMED	(1)	93-13	
					PACKING,PREFORMED	(1)	93-14	
					PARTS KIT,HYDRAULIC	(1)	88-15	
					PLUG,PIPE	(1)	89-12	
					RETAINER,PACKING	(4)	93-15	
					SEAL,DIRECT,CLUTCH	(1)	91-5	
					SEAL,INNER	(1)	92-4	
					SEAL,INNER	(1)	92-5	
					SEAL,OUTER	(1)	92-6	
					SEAL,PISTON,INNER	(1)	91-7	
					SEAL,PISTON,OUTER	(1)	91-6	
					SEAL,PLAIN	(1)	88-7	
					SEAL,PLAIN	(2)	94-4	
					SEAL,PLAIN,ENCASED	(1)	88-14	

(1) ITEM NO	(2) SMR CODE	(3) NSN	(4) CAGEC	(5) PART NUMBER	(6) DESCRIPTION AND USABLE ON CODES(UOC)	(7) QTY
					SEAL,PLAIN,ENCASED (2) 94-1	
					SEAL RING,METAL (1) 95-3	
* 24	PAHZZ	2520014608301	7X677	24205348	PARTS KIT,MECHANICAL 1996.....	1
					BEARING,CLUTCH (1) 93-12	
					SUPPORT (1) 93-17	
* 25	PAHZZ	2520011497861	7X677	24205551	CARRIER ASSEMBLY,TR 1996.....	1
					CARRIER ASSEMBLY (1) 90-9	
					ROLLER ASSEMBLY (1) 90-2	
* 26	PAHZZ	2520014747051	7X677	24205552	TRANSMISSION,HYDRAU 1997 AND ABOVE.	1
					CARRIER ASSEMBLY (1) 90-9	
					ROLLER ASSEMBLY (1) 90-2	
* 27	PAHZZ	5340014088525	7X677	24206749	ACCUMULATOR SEAL AND PISTON KIT.....	1
					PACKING,PREFORMED (1) 97-4	
					PACKING,PREFORMED (2) 97-6	
					PIN,STRAIGHT,HEADLE(1) 97-24	
					PISTON (1) 97-23	
					RING,RETAINING (2) 97-2	
* 28	PAHZZ	3110014784266	7X677	24208848	RACE BEARING 1997 AND ABOVE.....	1
					BEARING,NEEDLE (1) 90-11	
					RACE,BEARING (1) 90-10	
					RACE,BEARING (1) 90-12	
* 29	PAHZZ	2520014818460	7X677	24208849	PARTS KIT,CLUTCH 1997 AND ABOVE....	1
					BOLT,MACHINE (1) 88-12	
					SEAL (1) 93-16	
					SUPPORT (1) 93-17	
* 30	PAHZZ	3010014807597	7X677	24210954	PARTS KIT,TRANSMISS 1997 AND ABOVE.	1
					BOLT,MACHINE (7) 98-1	
					DISK,CLUTCH (5) 91-3	
					DISK,CLUTCH (5) 92-16	
					DISK,CLUTCH (1) 93-7	
					DISK,CLUTCH (3) 94-18	
					DISK,CLUTCH (4) 94-20	
					FILTER,ELEMENT (1) 88-15	
					FILTER,ELEMENT (1) 96-1	
					GASKET (1) 95-15	
					GASKET (1) 95-18	
					GASKET (1) 97-8	
					GASKET (1) 97-25	
					O-RING (1) 94-22	
					O-RING (1) 94-26	
					O-RING (2) 98-32	
					PACKING,PREFORMED (1) 93-13	
					PACKING,PREFORMED (1) 93-14	
					RETAINER,PACKING (4) 93-15	
					SEAL RING,METAL (1) 95-3	
					SEAL,DIRECT,CLUTCH (1) 92-4	
					SEAL,INNER (1) 91-5	
					SEAL,PLAIN (1) 88-7	
					SEAL,PLAIN (2) 94-4	
					SEAL,PLAIN,ENCASED (1) 88-14	
					SEAL,PLAIN,ENCASED (2) 94-1	

(1) ITEM NO	(2) SMR CODE	(3) NSN	(4) CAGEC	(5) PART NUMBER	(6) DESCRIPTION AND USABLE ON CODES(UOC)	(7) QTY
31	PAHZZ	5330014800752	7X677	24210955	GASKET SET 1997 AND ABOVE.....	1
					BOLT,MACHINE (7) 98-1	
					FILTER,ELEMENT (1) 88-15	
					FILTER,ELEMENT (1) 96-1	
					GASKET (1) 89-7	
					GASKET (1) 95-15	
					GASKET (1) 95-18	
					GASKET (1) 97-8	
					GASKET (1) 97-25	
					SEAL,PLAIN,ENCASED (1) 88-14	
* 32	PAHZZ	4330014965720	7X677	24210956	PARTS KIT,FLUID PRE 1997 AND ABOVE..	1
					FILTER PART (1) 88-15	
					GASKET (1) 89-7	
					SEAL,PLAIN,ENCASED (1) 88-14	
* 33	PAHZZ	5340013341422	84760	26431	HARDWARE KIT,ELECTR.....	1
					LEAD,IGNITION,ENGIN(1) 22-6	
					NUT,PLAIN,HEXAGON (4) 22-8	
					NUT,SELF-LOCKING,HE(2) 22-5	
					WASHER,FLAT (4) 22-9	
					WASHER,LOCK (1) 22-33	
					WASHER,LOCK (5) 22-7	
					WASHER,SHOULDERED (4) 22-9	
* 34	PAOZZ	2530011238787	7X677	26056747	VALVE,STEERING SELE.....	1
					BODY,VALVE (1) 136-15	
					SHAFT,STEERING COLU(1) 136-17	
					VALVE,LINEAR,DIRECT(1) 136-16	
* 35	PAOZZ	2530014599493	62826	2990054	PARTS KIT,AXLE,VEHI L.H.....	1
					BOOT (2) 110-3	
					CLAMP,BOOT (2) 110-2	
					CLAMP,BOOT (2) 110-4	
					DEFLECTOR,DIRT (1) 110-8	
					JOINT ASSEMBLY (1) 110-7	
					RING,RETAINING (2) 110-6	
					RING,RETAINING (2) 115-6	
					RING,SPACER (2) 110-5	
					SHAFT,SHOULDERED (1) 110-9	
* 36	PAOZZ	2530014599494	62826	2990055	PARTS KIT,AXLE,VEHI R.H.....	1
					BOOT (2) 110-3	
					CLAMP,BOOT (2) 110-2	
					CLAMP,BOOT (2) 110-4	
					DEFLECTOR,DIRT (1) 110-8	
					JOINT ASSEMBLY (1) 110-7	
					RING,RETAINING (2) 110-6	
					RING,SPACER (2) 110-5	
					SHAFT,SHOULDERED (1) 110-9	
* 37	PAOZZ	2530014599495	62826	2990056	PARTS KIT,AXLE,VEHI.....	1
					BOOT (2) 115-3	
					CLAMP,BOOT (2) 115-2	
					DEFLECTOR,DIRT (1) 115-8	
					JOINT ASSEMBLY (1) 115-7	
					RING,SPACER (2) 115-5	
					SHAFT,SHOULDERED (1) 115-9	
* 38	PAOZZ	2910012990473	84760	30405	PARTS KIT,METERING FUEL INJECTION PUMP.....	1

(1) ITEM NO	(2) SMR CODE	(3) NSN	(4) CAGEC	(5) PART NUMBER	(6) DESCRIPTION AND USABLE ON CODES(UOC)	(7) QTY
					GASKET (1) 22-26	
					GASKET (1) 24-42	
					O-RING (1) 22-11	
					O-RING (1) 24-36	
					O-RING (1) 24-26	
					O-RING (1) 23-35	
					O-RING (1) 23-38	
					O-RING (2) 23-5	
					O-RING (1) 24-13	
					PACKING,PREFORMED (2) 24-5	
					PACKING,PREFORMED (1) 24-6	
					PACKING,PREFORMED (1) 23-21	
					PIN,GROOVED,HEADLES(1) 23-10	
					RING,RETAINING (1) 24-17	
					RING,RETAINING (2) 23-13	
					SEAL,DRAIN PLUG (2) 23-20	
					SHIM (1) 23-7	
					STOP,VALVE (1) 24-31	
					TUBE,INSULATING (2) 22-18	
					TUBE,INSULATING (2) 22-20	
					WASHER,FLAT (1) 24-27	
* 39	PAOZZ	2530015666740	60250	328-7904	KIT,BRAKE LINING.....	1
					UOC:TTA,TTT,TT1,UUA,UUU,UU1,UU2	
					DISC BRAKE SHOE (1) 124A-10	
					PIN,COTTER (4) 124A-3	
					SPRING,HELICAL,COMP(4) 124A-6	
* 40	PAFZZ	5330011907510	24975	36-630	GASKET SET.....	1
					GASKET,INTERMEDIATE(1) 50-6	
* 41	PAFZZ	5330011907509	68505	37-123A	GASKET SET.....	1
					GASKET (1) 50-32	
* 42	PAOZZ	3830015364083	6W728	4662400-003	KIT,TRAVERSING UNIT.....	1
					UOC:TTT,XBB	
					ASSEMBLY,TRAVERSING(1) 196E-2	
					BRACKET,FRONT COVER(1) 196E-3	
					COVER,TRAVERSING (1) 196E-6	
					COVER,TRAVERSING (1) 196E-10	
* 43	PAOZZ	2520013598444	72447	5-174X	UNIVERSAL JOINT,VEH.....	1
					BEARING,RACE (8) 109-4	
					CROSS ASSEMBLY (2) 109-5	
					RING,RETAINING (8) 109-6	
* 44	PAOZZ	2520011892135	95019	5-213X	PARTS KIT,UNIVERSAL.....	1
					BEARING RACE (4) 108-7	
					BEARING RACE (4) 108-19	
					CROSS ASSEMBLY (1) 108-8	
					CROSS ASSEMBLY (2) 108-20	
					RING,RETAINING (4) 108-10	
					RING,RETAINING (8) 108-21	
* 45	PAHZZ	5365011753593	34623	5579445	SHIM ASSORTMENT PINION AXLE BEARING	1
					SPACER,RING (1) 117-16	
					SPACER,RING (1) 117-16	
					SPACER,RING (1) 117-16	
					SPACER,RING (1) 117-16	
					SPACER,RING (1) 117-16	

(1) ITEM NO	(2) SMR CODE	(3) NSN	(4) CAGEC	(5) PART NUMBER	(6) DESCRIPTION AND USABLE ON CODES(UOC)	(7) QTY
					SPACER,RING (1) 117-16	
					SPACER,RING (1) 117-16	
					SPACER,RING (1) 117-16	
					SPACER,RING (1) 117-16	
					SPACER,RING (1) 117-16	
					SPACER,RING (1) 117-16	
					SPACER,RING (1) 117-16	
					SPACER,RING (1) 117-16	
					SPACER,RING (1) 117-16	
					SPACER,RING (1) 117-16	
					SPACER,RING (1) 117-16	
					SPACER,RING (1) 117-16	
					SPACER,RING (1) 117-16	
					SPACER,RING (1) 117-16	
					SPACER,RING (1) 117-16	
					SPACER,RING (1) 117-16	
					SPACER,RING (1) 117-16	
					SPACER,RING (1) 117-16	
					SPACER,RING (1) 117-16	
* 46	PAHZZ	5365011748174	34623	5579453	SHIM ASSORTMENT DIFFERENTIAL.....	1
					SPACER,RING (1) 117-19	
					SPACER,RING (1) 117-19	
					SPACER,RING (1) 117-19

(1) ITEM NO	(2) SMR CODE	(3) NSN	(4) CAGEC	(5) PART NUMBER	(6) DESCRIPTION AND USABLE ON CODES(UOC)	(7) QTY
					SPACER,RING (1) 117-19	
					SPACER,RING (1) 117-19	
					SPACER,RING (1) 117-19	
					SPACER,RING (1) 117-19	
					SPACER,RING (1) 117-19	
					SPACER,RING (1) 117-19	
					SPACER,RING (1) 117-19	
* 47	PAOZZ	25100136431120	19207	57K0107	PARTS KIT,HINGE TAI.....	1
					HINGE,BUTT (2) 208-14	
					NUT,SELF-LOCKING,HE(6) 208-16	
					PIN,SPRING HINGE TA(2) 208-20	
					SCREW,CAP,HEXAGON H(3) 208-21	
					SCREW,CAP,HEXAGON H(3) 208-23	
					SPACER,SLEEVE (3) 208-22	
					WASHER,FLAT (12) 208-15	
* 48	PAFZZ	5330013618014	19207	57K0240	PARTS KIT,SEAL REPL MECHANICAL EQUIPMENT.....	1
					PARTS KIT,STEERING (1) 136-10	
					PARTS KIT,STEERING (1) 136-22	
* 49	PAFZZ	5330013618015	19207	57K0241	PARTS KIT,SEAL REPL DUST AND STUB SHAFT.....	1
					PARTS KIT,SEAL REPL(1) 136-13	
					PARTS KIT,STEERING (1) 136-14	
* 50	PAFZZ	2530013618012	19207	57K0242	PARTS KIT,POWER STE GEAR.....	1
					BEARING ASSEMBLY (1) 136-8	
					PARTS KIT,LINEAR AC(1) 136-9	
					PARTS KIT,SAFETY RE(1) 136-7	
					PARTS KIT,STEERING (1) 136-12	
* 51	PAOZZ	2640014196205	19207	57K0297	VALVE STEM ASSEMBLY.....	1
					ADAPTER,STRAIGHT,PI(1) 131-11	
					CAP,VALVE,PHEUMATIC(1) 131-8	
					NUT,SELF-LOCKING,HE(1) 131-13	
					O-RING (1) 131-12	
					VALVE CORE (1) 131-9	
					VALVE,PNEUMATIC TIR(1) 131-10	
* 52	PAOZZ	2530014138886	34623	57K3205	KIT,STEERING COLUMN.....	1
					HOUSING GEAR (1) 133-9	
					NUT,SELF-LOCKING,HE(1) 133-1	
					NUT,SELF-LOCKING,HE(4) 133-27	
					NUT,SELF-LOCKING,HE(2) 133-32	
					PIN,STRAIGHT,THREAD(1) 133-6	
					SCREW,CAP,HEXAGON H(5) 133-11	
					SCREW,CAP,SOCKET HE(2) 133-30	
					WASHER,FLAT (4) 133-31	
					WASHER,KEY (1) 133-3	
* 53	PAOZZ	2540014311338	19207	57K3222	PARTS KIT,TURN SIGN.....	1
					CONTROL,DIRECTIONAL(1) 54-1	
					CONTROL,DIRECTIONAL(1) 54-10	
					SCREW,TAPPING (4) 54-3	
					SCREW,TAPPING (3) 54-11	
* 54	PAOZZ	5980014388939	19207	57K3238	REPLACEMENT KIT,LENSE AND LAMP.....	1
					SEMICONDUCTOR (2) 52-2	
					LENSE (2) 52-13	

(1) ITEM NO	(2) SMR CODE	(3) NSN	(4) CAGEC	(5) PART NUMBER	(6) DESCRIPTION AND USABLE ON CODES(UOC)	(7) QTY
* 55	PAOZZ	5330014596477	19207	57K3489	PARTS KIT,SEAL,PITMAN SHAFT AND	1
					HOUSING.....	
					BOLT,MACHINE (4) 136-3	
					SEAL,KIT (1) 136-4	
					SEAL,PITMAN (1) 136-20	
*55A	PAOZZ	2530014559330	19207	57K3512	PARTS KIT,CALIPER,DISC BRAKE.....	1
					SEAL,ACTUATOR (1) 124-6	
					O-RING,ANTI-ROTATIO(1) 124-7	
					O-RING,PIN (1) 124-8	
					O-RING,ACTUATOR (1) 124-11	
					GASKET (1) 124-12	
					O-RING,THRUST (1) 124-13	
					BOOT,VEHICULAR (1) 124-14	
					CAP,PISTON (1) 124-15	
* 56	PAOZZ	2530014571337	19207	57K3515	PARTS KIT,DUST BOOT.....	1
					BOOT (2) 110-3	
					BOOT (2) 115-3	
					CLAMP,BOOT (2) 110-2	
					CLAMP,BOOT (2) 110-4	
					CLAMP,BOOT (2) 115-2	
					CLAMP,BOOT (2) 115-4	
					RING,RETAINING (2) 110-6	
					RING,RETAINING (2) 115-6	
					RING,SPACER (2) 110-5	
					RING,SPACER (2) 115-5	
* 57	PAFZZ	2520014396831	19207	57K3522	TRANSMISSION,HYDRAU 1997.....	1
					COVER,ACCESS (2) 100-23	
					MICROCIRCUIT,LINEAR(1) 56-7	
					TRANSMISSION,HYDRAU(1) 88-1	
					TUBE,BENT,METALLIC (1) 100-3	
					TUBE,BENT,METALLIC (1) 100-4	
* 58	PAOZZ	2530014433405	19207	57K3527	PARTS KIT,VEHICULAR WHEEL.....	1
					ADAPTER,STRAIGHT,PI(1) 131-11	
					NUT,SELF-LOCKING (12) 131-7	
					NUT,SELF-LOCKING,HE(1) 131-13	
					O-RING (1) 131-12	
					VALVE CORE (1) 131-9	
					VALVE,PNEUMATIC TIR(1) 131-10	
* 59	PAFZZ	2520014617072	19207	57K3540	TRANSMISSION,HYDRAU 1998.....	1
					COVER,ACCESS (2) 100-23	
					MICROCIRCUIT,LINEAR(1) 56-7	
					TRANSMISSION,HYDRAU(1) 88-1	
					TUBE,BENT,METALLIC (1) 100-3	
					TUBE,BENT,METALLIC (1) 100-4	
* 60	PAFZZ	2520014617077	19207	57K3548	TRANSMISSION,HYDRAU 1999.....	1
					COVER,ACCESS (2) 100-23	
					MICROCIRCUIT,LINEAR(1) 56-7	
					TRANSMISSION,HYDRAU(1) 88-1	
					TUBE,BENT,METALLIC (1) 100-3	
					TUBE,BENT,METALLIC (1) 100-4	
* 61	PAFZZ	2520014751083	19207	57K3599	TRANSMISSION,HYDRAU 2000.....	1
					COVER,ACCESS (2) 100-23	
					MICROCIRCUIT,LINEAR(1) 56-7	
					TRANSMISSION,HYDRAU(1) 88-1	
					TUBE,BENT,METALLIC (1) 100-3	
					TUBE,BENT,METALLIC (1) 100-4	

(1) ITEM NO	(2) SMR CODE	(3) NSN	(4) CAGEC	(5) PART NUMBER	(6) DESCRIPTION AND USABLE ON CODES(UOC)	(7) QTY
* 62	PAFZZ	2520014890850	19207	57K3570	TRANSMISSION,HYDRAU 2001.....	1
					COVER,ACCESS (2) 100-23	
					MICROCIRCUIT,LINEAR (1) 56-7	
					TRANSMISSION,HYDRAU (1) 88-1	
					TUBE,BENT,METALLIC (1) 100-3	
					TUBE,BENT,METALLIC (1) 100-4	
* 63	PAOZZ	2540015391558	19207	57K4403	GUARD,SPLASH,VEHICU.....	1
					UOC:TTA,UU2,UUA	
					BRACKET,MOUNTING (2) 226A-6	
					BRACKET,VEHICULAR C (1) 226A-4	
					BRACKET,VEHICULAR C (1) 226A-4	
					GUARD,SPLASH,VEHICU (2) 226A-9	
					MARKER,IDENTIFICATI (2) 226A-10	
					NUT,PLAIN,ASSEMBLED (2) 226A-12	
					NUT,SELF-LOCKING,HE (12) 226A-2	
					PLATE,MOUNTING (2) 226A-5	
					RIVET,BLIND (6) 226A-1	
					SCREW,CAP,HEXAGON H (4) 226A-7	
					SCREW,CAP,HEXAGON H (8) 226A-8	
					WASHER,FLAT (24) 226A-3	
					WASHER,LOCK (4) 226A-11	
* 64	PAOZZ	2590015543458	19207	57K4882	KIT,MODIFICATION,VE	1
					UOC:TTA,TT1,UUA,UU2	
					CABLE ASSEMBLY,SPEC (1) 267A-11	
					CABLE ASSEMBLY,SPEC (1) 267A-9	
					CLAMP,LOOP (2) 267A-4	
					CLAMP,LOOP (3) 267A-2	
					GENERATOR,TACHOMETE (1) 267A-7	
					NUT,SELF-LOCKING,HE (1) 267A-1	
					NUT,SELF-LOCKING,HE (1) 267A-5	
					PLATE,MOUNTING (1) 267A-10	
					SCREW,MACHINE (1) 267A-8	
					SCREW,TAPPING (2) 267A-3	
					SPEEDOMETER (1) 267A-13	
					STRAP,TIEDOWN,ELECT (3) 267A-6	
					WIRING HARNESS,BRAN (1) 267A-12	
* 65	PAOZZ		12907	57K4899	KIT,ACCESSORY,MANIF.....	1
					UOC:TTA,TTT,UU1,UU2,UUA,UUU,XAA,TT1	
					HOSE ASSEMBLY,HYDRA (1) 225K-6	
					HOSE ASSY,HYDRAULIC (1) 225K-9	
					HOSE ASSY,HYDRAULIC (1) 225K-1	
					HOSE ASSY,HYDRAULIC (1) 225K-8	
					NUT,SELF-LOCKING,HE (4) 225K-4	
					SCREW,CAP,HEXAGON H (2) 225K-10	
					SCREW,CAP,HEXAGON H (2) 225K-5	
					SUPPORT,RELIEF VALV (1) 225K-2	
					TEE FITTING (1) 225K-7	
					VALVE,REGULATING (1) 225K-11	
					WASHER,FLAT (8) 225K-3	
* 66	PAOZZ	2990015708973	19207	57K4907	KIT,TGPK,HARDWARE.....	1
					UOC:TT1	
					NUT,SELF-LOCKING,HE (1) 201J-17	
					NUT,SELF-LOCKING,HE (1) 201D-6	

(1) ITEM NO	(2) SMR CODE	(3) NSN	(4) CAGEC	(5) PART NUMBER	(6) DESCRIPTION AND USABLE ON CODES(UOC)	(7) QTY
					NUT,SELF-LOCKING,HE (6) 201I-6	
					NUT,SELF-LOCKING,HE (6) 200D-13	
					NUT,SELF-LOCKING,HE (8) 201G-22	
					SCREW,CAP,HEXAGON H (1) 201J-15	
					SCREW,CAP,HEXAGON H (1) 201J-14	
					SCREW,CAP,HEXAGON H (1) 201D-5	
					SCREW,CAP,HEXAGON H (2) 201J-16	
					SCREW,CAP,HEXAGON H (5) 201D-2	
					SCREW,CAP,HEXAGON H (5) 200D-9	
					SCREW,CAP,HEXAGON H (6) 200D-12	
					SCREW,CAP,HEXAGON H (6) 201I-7	
					SCREW,CAP,HEXAGON H (8) 201G-16	
					WASHER,FLAT (12) 201I-5	
					WASHER,FLAT (16) 201G-17	
					WASHER,FLAT (17) 200D-11	
					WASHER,FLAT (5) 201J-12	
					WASHER,FLAT (7) 201D-4	
					WASHER,LOCK (4) 201J-13	
					WASHER,LOCK (5) 200D-10	
					WASHER,LOCK (5) 201D-3	
* 67	PAOZZ	2540013008745	19207	5705618	PARTS KIT,DOOR LATCH RIGHT HAND.....	1
					HANDLE,DOOR (1) 226-9	
					HANDLE,DOOR (1) 226-14	
					SCREW,MACHINE (1) 226-10	
					SPRING,HELICAL,TORS (1) 226-11	
					WASHER,FLAT (1) 226-13	
* 68	PAOZZ	2540013008744	19207	5705619	HANDLE,DOOR,INSIDE LEFT HAND.....	1
					HANDLE,DOOR,VEHICUL (1) 226-9	
					HANDLE,DOOR,VEHICUL (1) 226-14	
					SCREW,MACHINE (1) 226-10	
					SPRING,HELICAL,TORS (1) 226-11	
					WASHER,FLAT (1) 226-13	
* 69	PAOZZ	2530014774194	34623	57K3565	BRAKE SHOE SET CONTAINS 4 BRAKE PADS FOR 1 AXLE SET.....	1
					DISK,BRAKE SHOE (4) 124-16	
					DISK,BRAKE SHOE.... (4) 125-11	
* 70	PAFZZ	2530015106041	34623	5716414	KIT,VALVE ASSEMBLY POWER STEERING PUMP.....	1
					O-RING (1) 138B-4	
					SPRING (1) 138B-6	
					VALVE ASSMBLY (1) 138B-5	
* 71	PAOZZ	2530015684462	34623	5717285	KIT,BRAKE PAD.....	1
					UOC:TTA,TT1,UUA,UU2	
					DISC BRAKE SHOE (1) 125A-12	
					DISC BRAKE SHOE (1) 125B-4	
					PIN CLIP (2) 125B-10	
					PIN CLIP (2) 125A-5	
					RETENTION PIN (2) 125B-5	
					RETENTION PIN (2) 125A-13	
* 72	PAOZZ	2530015700763	04X57	5717286	KIT,CALIPER WEAR P.....	1
					UOC:TTA,TT1,UUA,UU2	
					PLATE,WEAR,BRAKE SH (2) 125B-9	
					PLATE,WEAR,BRAKE SH (2) 125A-9	
* 73	PAOZZ		34623	5717287	KIT,CALIPER BLEED.....	1
					UOC:TTA,TT1,UUA,UU2	
					BRASS ADAPTER (2) 125B-6	
					BRASS ADAPTER (2) 125A-10	

(1) ITEM NO	(2) SMR CODE	(3) NSN	(4) CAGEC	(5) PART NUMBER	(6) DESCRIPTION AND USABLE ON CODES(UOC)	(7) QTY
					VALVE,BLEEDER,SCREW(2) 125A-11	
					VALVE,BLEEDER,SCREW(2) 125B-7	
* 74	PAOZZ	5340013889512	34623	5935425	KIT,BATTERY.....	1
					BOOT,DUST (3) 66-16	
					CAP,PROTECTIVE (3) 66-17	
* 75	PAOZZ	2540015328882	6W728	6431390	KIT,ALUMINUM OVERLAY.....	1
					UOC:XBB	
					OVERLAY,FRONT DOOR (2) 167-22	
					OVERLAY,REAR DOOR (2) 167A-20	
					SCREW,CAP,HEXAGON H(2) 167-19	
					SCREW,CAP,HEXAGON H(2) 167A-17	
					SCREW,CAP,HEXAGON H(2) 167-25	
					SCREW,CAP,HEXAGON H(2) 167A-23	
					SCREW,CAP,HEXAGON H(2) 167-26	
					SCREW,CAP,HEXAGON H(2) 167A-25	
					WASHER,FLAT (2) 167-21	
					WASHER,FLAT (2) 167A-19	
					WASHER,FLAT (2) 167-23	
					WASHER,FLAT (2) 167A-21	
					WASHER,FLAT (2) 167-27	
					WASHER,FLAT (2) 167A-25	
					WASHER,LOCK (2) 167-20	
					WASHER,LOCK (2) 167A-18	
					WASHER,LOCK (2) 167-24	
					WASHER,LOCK (2) 167A-22	
* 76	PAOZZ	5340015369918	6W728	6431507	HARDWARE KIT,MECHANI.....	1
					UOC:TTT,XBB	
					BAR,TIE (2) 196F-4	
					BRACKET,CORNER BRAC(1) 196F-7	
					BRACKET,CORNER BRAC(1) 196F-17	
					BRACKET,CROSSMEMBER(1) 196F-27	
					BRACKET,MOUNTING (4) 196F-14	
					BRACKET,MOUNTING (2) 196F-16	
					BRACKET,MOUNTING (1) 196F-32	
					BRACKET,REAR SUPPOR(1) 196F-18	
					BRACKET,REAR SUPPOR(1) 196F-20	
					CROSSMEMBER NUT,PLA(1) 196F-28	
					HANDLE (2) 196F-29	
					PLATE,ALUMINUM (1) 196F-13	
					PLATE,ALUMINUM (1) 196F-9	
					PLATE,ALUMINUM (1) 196F-5	
					PLATE,BOTTOM (1) 196F-15	
					PLATE,CLAMPING NUT (2) 196F-23	
					PLATE,GAP STRIP (2) 196F-8	
					PLATE,REAR (1) 196F-10	
					PLATE,STEEL (1) 196F-6	
* 77	PAOZZ	5340015354868	6W728	6431779	HARDWARE KIT,MECHANI.....	1
					UOC:TTT,XBB	
					BOLT,MACHINE (20) 196F-33	
					NUT,SELF-LOCKING (9) 196F-22	
					SCREW,BUTTON HEAD (1) 196F-26	
					SCREW,CAP,HEXAGON H(16) 196F-1	
					SCREW,CAP,HEXAGON H(6) 196F-11	
					SCREW,CAP,HEXAGON H(6) 196F-19	
					SCREW,CAP,HEXAGON H(2) 196F-25	

(1) ITEM NO	(2) SMR CODE	(3) NSN	(4) CAGEC	(5) PART NUMBER	(6) DESCRIPTION AND USABLE ON CODES(UOC)	(7) QTY
					SCREW,CAP,HEXAGON H(1) 196F-30	
					SCREW,CAP,HEXAGON H(2) 196F-31	
					SCREW,FLAT HEAD (5) 196F-21	
					WASHER,FLAT (54) 196F-3	
					WASHER,LOCK (50) 196F-2	
					PLATE,STEEL (1) 196F-12	
					UNIVERSIAL CROSSMEM(1) 196F-24	
* 78	PAOZZ	5340015356946	6W728	6431780	HARDWARE KIT,MECHANI.....	1
					UOC:TTT,XBB	
					SCREW,CAP,HEXAGON H(4) 196E-4	
					SCREW,CAP,HEXAGON H(2) 196E-14	
					SCREW,MACHINE (6) 196E-7	
					WASHER,FLAT (4) 196E-5	
					WASHER,FLAT (3) 196E-13	
* 79	PAOZZ	5340015368755	6W728	6433328-01M1	KIT,TRAVERSING GEAR MOUNTING KIT...	1
					UOC:TTT,XBB	
					BRACKET,MOUNTING (1) 196E-1	
					SCREW,CAP,HEXAGON H(3) 196E-15	
					SCREW,CAP,HEXAGON H(3) 196E-17	
					SCREW,CAP,HEXAGON H(4) 196F-19	
					SCREW,CAP,HEXAGON H(4) 196F-30	
					SCREW,CAP,HEXAGON H(2) 196F-31	
					WASHER,FLAT (54) 196E-3	
					WASHER,LOCK (50) 196F-2	
* 80	PAOZZ	4820014609079	6W728	70-04659	PARTS KIT,VALVE.....	1
					UOC:XBB	
					CLAMP,LOOP (1) 285-4	
					O-RING (1) 285-2	
					O-RING (1) 285-6	
					O-RING (1) 285-7	
					VALVE,EXPANSION (1) 285-3	
* 81	PAFZZ	2530011238787	7X677	7846626	VALVE,STEERING SECT.....	1
					BODY VALVE (1) 136-15	
					SHAFT,STEERING (1) 136-17	
					VALVE,LINEAR,DIRECT(1) 136-16	
* 82	PAFZZ	5330010440703	52788	7848522	PARTS KIT,SEAL REPL POWER STEERING PUMP.....	1
					GASKET (1) 138-11	
					MAGNET,PERMANENT (1) 138-8	
					O-RING (1) 138-14	
					RING,SEAL (2) 138-4	
					SEAL (1) 138-3	
					SEAL (1) 138-7	
					SEAL,O-RING (1) 138-5	
* 83	PAFZZ	5330004933876	11083	8S4680	PACKING,PREFORMED.....	1
					SEAL,O-RING (3) 50-52	
* 84	PAHZZ	3120011674172	7X677	8623920	PARTS KIT,BEARING R.....	1
					BEARING,NEEDLE (1) 90-5	
					RACE,BEARING (1) 90-4	
					RACE,BEARING (1) 90-6	
* 85	PAHZZ	3110011672443	7X677	8623921	BEARING,ROLLER,THRU.....	1
					BEARING,NEEDLE (1) 90-11	
					RACE,BEARING (1) 90-10	
					RACE,BEARING (1) 90-12	

(1) ITEM NO	(2) SMR CODE	(3) NSN	(4) CAGEC	(5) PART NUMBER	(6) DESCRIPTION AND USABLE ON CODES(UOC)			(7) QTY
* 86	PAHZZ	3110011690734	7X677	8623922	BEARING,ROLLER,THRU TRANSMISSION...			1
					BEARING,NEEDLE	(1)	90-19	
					RACE,BEARING	(1)	90-18	
					RACE,BEARING	(1)	90-20	
* 87	PAFZZ	2520014108067	7X677	8680911	PARTS KIT,MECHANICA.....			1
					RING,RETAINING	(1)	94-12	
* 88	PAHZZ	3120011748153	7X677	8680914	KIT,TRANSMISSION.....			1
					SUPPORT	(1)	93-17	
* 89	PAHZZ	2520014108077	7X677	8680915	KIT,TRANSMISSION.....			1
					DISK,CLUTCH	(1)	93-3	
					RACE	(1)	93-2	
					RING	(1)	91-14	
					SPRAG ASSEMBLY	(1)	93-1	
* 90	PAFZZ	2520014818344	7X677	8685921	PARTS KIT,OIL PAN 1996.....			1
					MAGNET,CLIP,COLLECT	(1)	88-16	
					PAN,TRANSMISSION	(1)	88-18	
					PLUG,PROTECTIVE,DUS	(1)	88-21	
					WASHER,FLAT	(1)	88-20	
* 91	PAFZZ	2920011922959	68505	90-816	PARTS KIT,SOLENOID.....			1
					BOOT	(1)	50-27	
					RETAINER CORE	(1)	50-24	
					RETAINER CORE	(1)	50-26	
					SNAP RING CORE END	(1)	50-23	
					SPRING,CORE	(1)	50-25	
					WASHER,SOLENOID	(1)	50-28	
* 92	PAFZZ	2920003026342	68505	90-2206	PARTS KIT,YOKE ADJU.....			1
					GASKET PLUG	(1)	50-15	
					NUT	(1)	50-22	
					PIN,STRAIGHT	(2)	50-13	
					PLUG,YOKE,ADJUSTING	(1)	50-16	
					PLUG,YOKE,ADJUSTING	(1)	50-14	
* 93	PAFZZ	2920010687182	68505	90-2225	PARTS KIT,ENGINE GE.....			1
					CONTACT ASSEMBLY	(1)	50-35	
					NUT,HEXAGON ELASTIC	(1)	50-33	
					SPRING	(1)	50-36	
					WASHER,PLAIN	(1)	50-34	
					WASHER,STEEL	(1)	50-37	
					WASHER,STEEL	(1)	50-37	
* 94	PAFZZ	5305011889707	68505	90-2836	SCREW ASSORTMENT.....			1
					SCREW,HEX HEAD	(6)	50-65	
					SCREW,HEX HEAD	(7)	50-19	
					SCREW,HEX HEAD	(4)	50-76	
* 95	PAFZZ	2920011922956	68505	90-2837	PARTS KIT,ENGINE GE.....			1
					BUSHING,INSULATING	(1)	50-53	
					BUSHING,INSULATING	(1)	50-72	
					NUT,HEXAGON	(1)	50-59	
					NUT,HEXAGON	(4)	50-61	
					NUT,HEXAGON	(1)	50-78	
					NUT,HEXAGON	(3)	50-81	
					STUD,TERMINAL	(1)	50-64	
					STUD,TERMINAL	(1)	50-66	
					STUD,TERMINAL	(1)	50-70	

(1) ITEM NO	(2) SMR CODE	(3) NSN	(4) CAGEC	(5) PART NUMBER	(6) DESCRIPTION AND USABLE ON CODES(UOC)	(7) QTY
					WASHER,CAP,STARTER (1) 50-56	
					WASHER,CAP,STARTER (1) 50-75	
					WASHER,INSULATING (1) 50-55	
					WASHER,INSULATING (1) 50-62	
					WASHER INSULATING (1) 50-71	
					WASHER,INSULATING (1) 50-74	
					WASHER,NEOPRENE (1) 50-54	
					WASHER,NEOPRENE (2) 50-73	
					WASHER,LOCK (4) 50-58	
					WASHER,LOCK (2) 50-80	
					WASHER,PLAIN (1) 50-57	
					WASHER,PLAIN (1) 50-63	
					WASHER,PLAIN (1) 50-77	
* 96	PAFZZ	2920011924473	68505	90-2838	PARTS KIT,ENGINE GE.....	1
					BEARING,ABS BRONZE (1) 50-69	
					FELT OIL RETAINER (1) 50-68	
					SCREW,FILL HEAD (3) 50-5	
* 97	PAFZZ	3120011914637	19728	90-2840	PARTS KIT,BEARING R.....	1
					SPACER (1) 50-7	
					THRUST WASHER (1) 50-39	
					THRUST WASHER (8) 50-40	
					WASHER,FLAT (1) 50-1	
* 98	PAFZZ	2920011916534	68505	90-2841	PARTS KIT,ENGINE GE.....	1
					PINION STOP STARTER(1) 50-10	
					SNAP,RING (1) 50-11	
					END OF FIGURE	

(1) ITEM NO	(2) SMR CODE	(3) NSN	(4) CAGEC	(5) PART NUMBE	(6) DESCRIPTION AND USABLE ON CODES(UOC)	(7) QTY
					GROUP 95 GENERAL USE STANDARIZED PARTS 9501 HARDWARE SUPPLIES AND BULK MATERIAL,COMMON	
					FIG. BULK	
1	PAOZZ	4010005852108	16004	C43974	CHAIN,WELDLESS TYPE"2",CLASS "2", STEEL,10 LINK.....	V
2	PAOZZ	4020002460688	81755	P5006-4G	CORD,FIBROUS.....	V
3	PAOZZ	5330010419721	26051	R-451-N	GASKET.....	V
4	PAOZZ	5325000743301	96906	MS21266-2N	GROMMET,NONMETALLIC FLEXIBLE, .162 INCHES X .200 INCHES X 25.0 FEET LONG,BLACK.....	V
5	PAOZZ	4720011637833	24161	4219-3681	HOSE,NONMETALLIC.....	V
6	PAOZZ	4720010036706	61424	PFT-88-BLK-100	HOSE,NONMETALLIC.....	V
7	PAOZZ	4720006844033	83065	RB1450-1-4IDX1-20D	HOSE,NONMETALLIC.....	V
8	PAOZZ	4720010144915	06853	246115	HOSE,NONMETALLIC.....	V
9	PAOZZ	4720014609071	6W728	01-02420	HOSE,NONMETALLIC.....	V
10	PAOZZ	4720014310721	6W728	31-00153	HOSE,NONMETALLIC.....	V
* 11	PAOZZ	4720011647803	60703	846-50	HOSE,NONMETALLIC SYNTHETIC RUBBER INNER, 1/2 O.D., 3/16 I.D.,50 FT LONG.....	V
12	PAOZZ	4720011699891	61424	PFT-6B	HOSE,NONMETALLIC NYLON 3/8 O.D., 5/16 I.D., 50 FT LONG.....	V
13	PAOZZ	4720005558015	96906	MS521302B206R	HOSE,NONMETALLIC 1.00 I.D. X 1.562 O.D. X 25 FT LONG.....	V
14	PAOZZ	4720011883190	59150	1775-826	HOSE,NONMETALLIC SYNTHETIC RUBBER INNER O.D., 1/4 I.D., 1/8, 50 FT LONG.....	V
15	PAOZZ	4720011856673	34623	ET029	HOSE,NONMETALLIC SPIRAL REINFORCED, .380 O.D., 290 I.D., 15 FT LONG.....	V
16	PAOZZ	4720011862358	34623	5741209	HOSE,NONMETALLIC FUEL AND OIL RESISTANT, 3/8 I.D., 5/8 O.D., 25 FT LONG.....	V
17	PAOZZ	4720011595796	7X677	9438373	HOSE,NONMETALLIC FUEL AND OIL RESISTANT,5/8 O.D., 3/8 I.D.,25 FT LONG.....	V
18	PAOZZ	4720011557784	7X677	9438257	HOSE,NONMETALLIC 1/2 O.D. X 1/4 I.D., 50 FT LONG.....	V
19	PAOZZ	4720004910102	96906	MS521301A203R	HOSE,NONMETALLIC STRAIGHT,ENGINE COOLANT.....	V
* 20	PAOZZ	2510014588036	05TS2	VHTR-1-DAAC-50V	INSULATION PANEL,VE 48 X 48 X 1/2..	V
* 21	PAOZZ	2590015197840	19207	12339902-2	PAD,CUSHIONING 3/8 THICK, 9/32 WIDE, 800 FT LONG.....	V
* 22	PAOZZ	5330012914615	34623	5741221	PLASTIC STRIP 1/4 THICK, 1/2 WIDE, 20 FT LONG.....	V
* 23	PAOZZ	5330015251972	19207	7P0013	RUBBER.....	V
* 24	PAOZZ		6W728	4668923	RUBBER.....	V
* 25	PAOZZ	5330014091981	34623	6000332	SEAL.NONMETALLIC CHANNEL.....	V
* 26	PAOZZ	5330014365553	6W728	4668962	SEAL,NONMETALLIC.....	V

(1) ITEM NO	(2) SMR CODE	(3) NSN	(4) CAGEC	(5) PART NUMBER	(6) DESCRIPTION AND USABLE ON CODES(UOC)	(7) QTY
* 27	PAOZZ	5330012816523	82942	68-412121-1	SEAL,NONMETALLIC ST .188 THICK,1/2 WIDE,50 FT LONG.....	V
* 28	PAOZZ	5330013128622	19207	12340204	SEAL,NONMETALLIC SP SPECIAL EDPM WIRE CARRIER, 396 FT LONG.....	V
* 29	PAOZZ	5330012131312	34623	5741219	SEAL,NONMETALLIC SP SPECIAL EPDM RUBBER WIRE CARRIER, 18 FT LONG.....	V
* 30	PAOZZ		34623	EX4379	TAPE.....	V
* 31	PAOZZ		19207	400-080-330-140	TAPE.....	V
* 32	PAOZZ	8315011157617	18876	11459081	FASTENER,TAPE,HOOK.....	V
* 33	PAOZZ	9320011552369	45152	4965	TAPE,ADHESIVE,RUBBE RUBBER DOUBLE COATED NEOPRENE,3/4 X .45 X 108 FT LONG.....	V
* 34	PAOZZ		19207	12339376-2	TAPE,PRESSURE SENSI.....	V
* 35	PAOZZ	2040015064413	6W728	4668367	MOLDING,METAL.....	V
* 36	PAOZZ	2590015064930	6W728	4668368	MOLDING,METAL.....	V
* 37	PAFZZ	4710011610138	7X677	12548430	TUBE,METALLIC CONDUCTOR.....	V
* 38	PAOZZ		34623	RCSK17769-5	TUBE,METALLIC.....	V
* 39	PAOZZ	4720010587213	19207	CPR104420-1	TUBING,NONMETALLIC PLASTIC,.170 INCH I.D.,.250 INCH O.D.....	V
* 40	PAOZZ	9330012521239	81349	B47287-II-1/2	TUBING,PLASTIC,SPIR OIL COOLANT LINES,.50 I.D.,.850 O.D.,100 FT LONG	V
* 41	PAOZZ	6145008053354	81349	M13486/1-12	WIRE,ELECTRICAL.....	V
* 42	PAOZZ	6145007056674	81349	M13486/1-14	WIRE,ELECTRICAL 0 AWG,SINGLE CONDUCTOR.....	V
* 43	PAOZZ		6W728	1000214-001	BACKING,CHANNEL FLAT STRIP,DOOR ASSEMBLY,50 FT LONG.....	V
* 44	PAOZZ		6W728	1000111-007	SPRING,HOSE GUARD 100 FT LONG.....	V
* 45	PAOZZ	4720010144915	81343	J844TYBSIZE3/8BLACK	HOSE,NONMETALLIC.....	V
* 46	PAOZZ	5330014214967	77824	4215-5116-0 28IN	PAD,CUSHIONING.....	V
* 47	PAOZZ	5330014214967	6W728	4668948-000	SEAL,NONMETALLIC SP.....	V
* 48	PAOZZ	5970008122969	81343	MS23053/5-104-0-2	INSULATION SLEEVING 1 FOOT LONG....	V
* 49	PAOZZ	2590011761177	82654	75000317	MOLDING,METAL 100 FT LONG.....	V
* 50	PAOZZ		24617	9438183	HOSE,NONME.....	V
* 51	PAOZZ	4720009302231	96906	MS521304B203R	HOSE,NONME.....	V
* 52	PAOZZ		81349	MIL-W-83420/2-002	ROPE,WIRE.....	V
* 53	PAOZZ	5940009268034	96906	MS18029-13S-8	COVER,TERMINAL BOAR.....	V
* 54	PAOZZ	5330015520708	6W728	6437172-02M1	SEAL,NONMETALLIC 50 FT ROLL.....	V
* 55	PAOZZ	4720011557784	7X677	9438257	HOSE,NONMETALLIC 1/2 O.D. X 1/4 I.D.50 FT LONG.....	V
* 56	PAOZZ	4720010144915	81343	J844TYBSIZE3/8BLACK	HOSE,NONMETALLIC.....	V
* 57	PAOZZ		0NM25	T-1350B2X1/4	EDGE PROTECTOR.....	V
* 58	PAOZZ		34623	6027320	TRIM EDGE.....	V
* 59	PAOZZ	5970008122969	81343	MS23053/5-104-0	INSULATION SLEEVING.....	V
* 60	PAOZZ		39428	8451A22	TRIM EDGE 50 FOOT ROLL.....	V
* 61	PAOZZ	6145001526499	81349	M13486/1-5	WIRE,ELECTRICAL.....	V
* 62	PAOZZ		34623	6006218	EDGE PROTECTOR.....	V

(1) ITEM NO	(2) SMR CODE	(3) NSN	(4) CAGEC	(5) PART NUMBER	(6) DESCRIPTION AND USABLE ON CODES(UOC)	(7) QTY
* 63	PCOZZ		0NM25	ZR352P	SEAL.....	V
* 64	PFOZZ	9330015664681	34623	6037172	TUBING,PLASTIC.....	V
* 65	PAOZZ		12624	EP-3376	TAPE,PRESSURE SENSI.....	V
* 66	PAOZZ	4720004019299	81343	SAE-20R1ECLTS-A-25XR	HOSE,NONMETALLIC.....	V
* 67	PAOZZ		34623	6006217	TAPE,SEAL.....	V
* 68	PAOZZ	2590011967281	19207	12339902-1	PAD,CUSHIONING.....	V
* 69	PAOZZ	5330015332947	34623	6025527	SEAL,NONMETALLIC,ST.....	V
* 70	PAOZZ	5342012749884	34623	5597890	PROTECTOR,EDGE.....	V
* 71	PAOZZ	4720000658682	29510	1125218C1	HOSE,NONMETALLIC SYNTHETIC RUBBER INNER,1/2 O.D.,3/16 I.D.,50 FT LONG.	V
* 72	PAOZZ	4720011560549	7X677	9439046	HOSE,NONMETALLIC.....	V
* 73	PAOZZ	7510015604927	19207	12339376-1	TAPE,PRESSURE SENSITIVE.....	V

END OF FIGURE

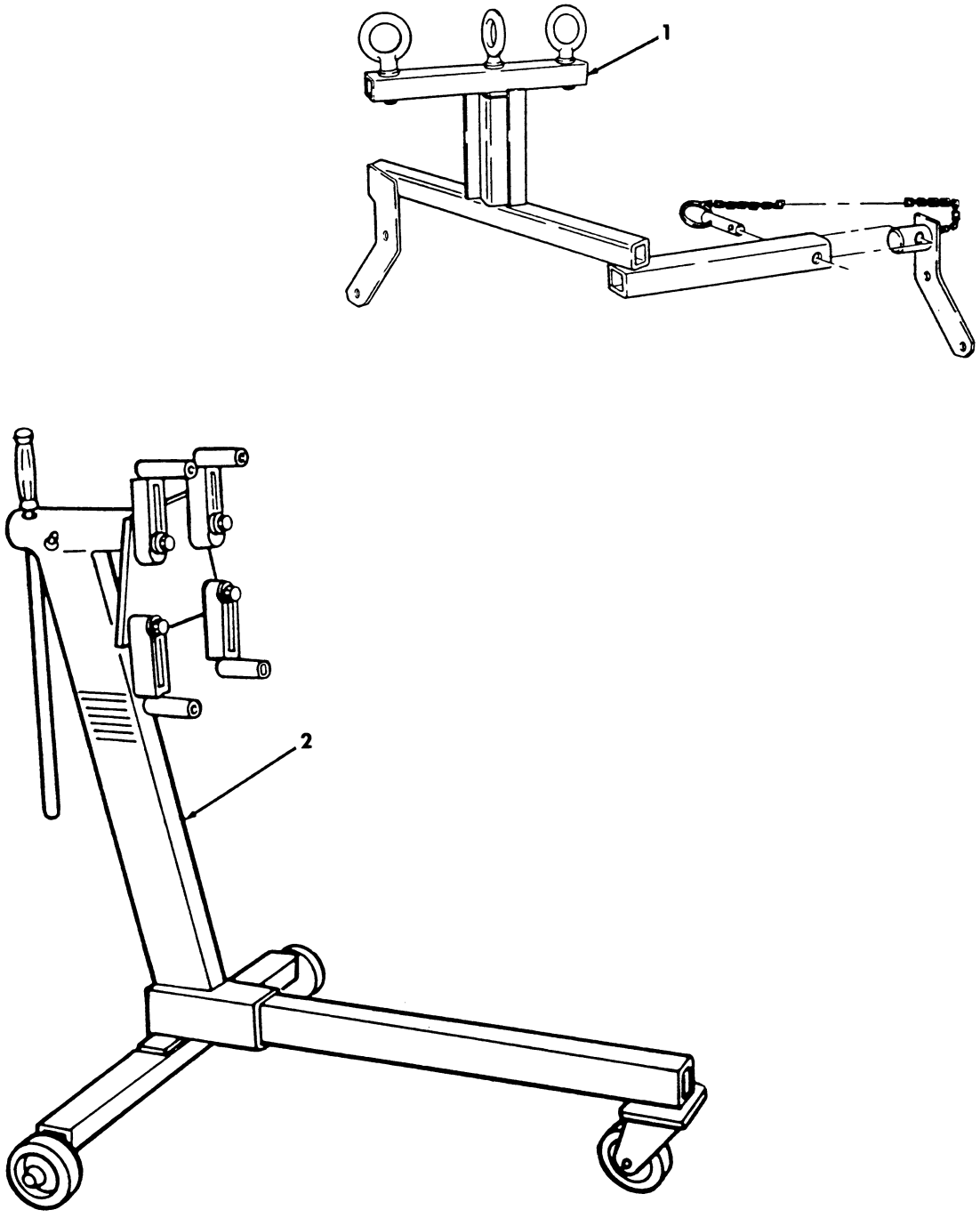

Figure 289. Special Tools

(1) ITEM NO	(2) SMR CODE	(3) NSN	(4) CAGEC	(5) PART NUMBER	(6) DESCRIPTION AND USABLE ON CODES(UOC)	(7) QTY
					GROUP 26 TOOLS AND TEST EQUIPMENT	
					2604 SPECIAL TOOLS	
					FIG. 289 SPECIAL TOOLS	
1	PEFZZ	4910011937808	33287	J33139	SLING,ENGINE AND TR LIFTING,BOI: SEE PARA. 5.H. PART OF KIT P/N 57K0268.....	
2	PEFZZ	4910005060037	45225	1725-A	STAND,MAINTENANCE,A ENGINE,BOI: SEE PARA. 5.H. PART OF KIT P/N 57K0266.....	

END OF FIGURE

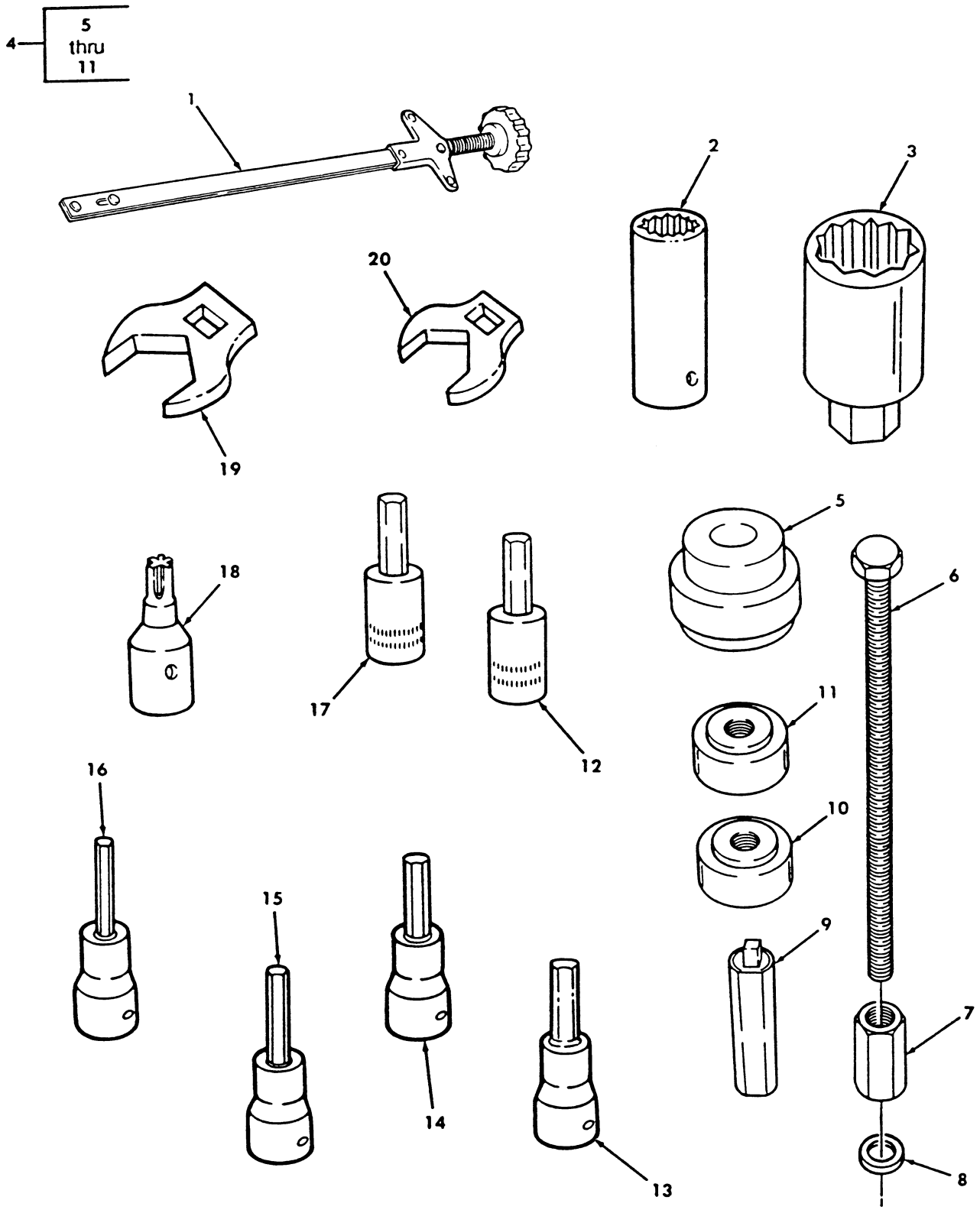

Figure 290. Special Tools.

(1) ITEM NO	(2) SMR CODE	(3) NSN	(4) CAGEC	(5) PART NUMBER	(6) DESCRIPTION AND USABLE ON CODES(UOC)	(7) QTY
					GROUP 2604 SPECIAL TOOLS	
					FIG. 290 SPECIAL TOOLS	
1	PEFZZ	5120012096870	33287	J29834	LIFTER,VALVE SPRING BOI: SEE PARA. 5.H. PART OF KIT P/N 57K0268.....	
2	PEOZZ	5120001425152	96508	TL-12	SOCKET,SOCKET WRENC 12 POINT,3/8, 3/8 DRIVE,BOI: SEE PARA. 5.H.....	
3	PEFZZ	5120011715233	25341	J-29873	SOCKET,SOCKET WRENC NOZZLE,SOCKET 30MM SPECIAL,BOI: SEE PARA. 5.H. PART OF KIT P/N 57K0268.....	
4	PEHZZ	5120012063818	33287	J35178	PULLER,MECHANICAL CAMSHAFT BEARING, BOI: SEE PARA. 5.H. PART OF KIT P/N 57K0266.....	
5	PEHZZ	5120012481808	33287	J35178-1	.ADAPTER,MECHANICAL.....	
6	PEHZZ	5306012545465	33287	J6098-3	.ROD,CONTINUOUS THRE.....	
7	PEHZZ	5310012533148	33287	J6098-5	.NUT,PLAIN,HEXAGON.....	
8	PEHZZ	5310002059078	75638	6805	.WASHER,FLAT.....	
9	PEHZZ	5120012474749	33287	J6098-4	.HANDLE,DRIVER.....	
10	PEHZZ	5120012481809	33287	J6098-11	.ADAPTER,MECHANICAL.....	
11	PEHZZ	5120012481810	33287	J6098-12	.ADAPTER,MECHANICAL.....	
12	PEOZZ	5120010551308	55719	FAM6A	SCREWDRIVER ATTACHM 6MM,3/8 DRIVE, BOI: SEE PARA. 5.H. PART OF KIT P/N 57K0267.....	
13	PEFZZ	5120009690071	C7127	FA5A	SCREWDRIVER ATTACHM HEX DRIVE,5/32 IN,3/8 IN SQ DR,BOI: SEE PARA. 5.H. PART OF KIT P/N 57K0268.....	
14	PEOZZ	5120005968508	95021	V8508	SCREWDRIVER ATTACHM HEX DRIVE,1/4 IN,3/8 IN SQ DR,BOI: SEE PARA. 5.H. PART OF KIT P/N 57K0267.....	
15	PEOZZ	5120013673477	55719	FA10E	SCREWDRIVER ATTACHM HEX,5/16,3/8 DRIVE,BOI: SEE PARA. 5.H PART OF KIT P/N 57K0267.....	
16	PEOZZ	5120005164979	95021	4080-08	SCREWDRIVER ATTACHM HEX,1.8,3/8 DRIVE,BOI: SEE PARA. 5.H. PART OF KIT P/N 57K0267.....	
17	PEOZZ	5120010534159	55719	FAM8A	SCREWDRIVER ATTACHM HEX,8 MM,3/8 DRIVE,BOI: SEE PARA. 5.H. PART OF KIT P/N 57K0267.....	
18	PEHZZ	5120010781899	84760	22939	SCREWDRIVER ATTACHM TORX,T27,BOI: SEE PARA. 5.H. PART OF KIT P/N 57K0266.....	
19	PEFZZ	5120012309421	33287	J35160	CROWFOOT ATTACHMENT 19 MM,1/2 DRIVE,BOI: SEE PARA. 5.1. PART OF KIT P/N 57K0268.....	
20	PEFZZ	5120012428165	33287	J35159	CROWFOOT ATTACHMENT 16 MM,3/8 DRIVE,BOI: SEE PARA. 5.1. PART OF KIT P/N 57K0268.....	

END OF FIGURE

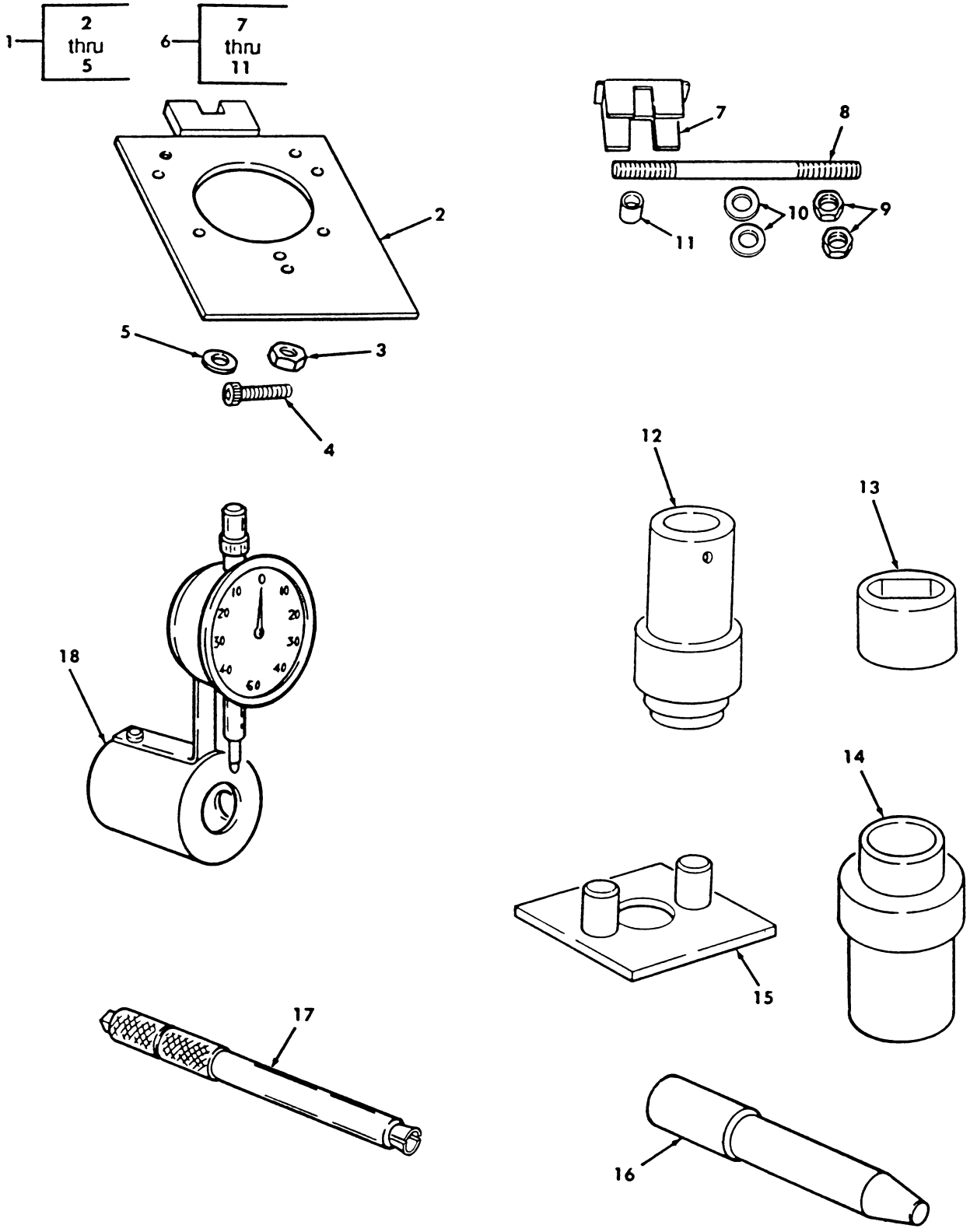

Figure 291. Special Tools.

(1) ITEM NO	(2) SMR CODE	(3) NSN	(4) CAGEC	(5) PART NUMBER	(6) DESCRIPTION AND USABLE ON CODES(UOC)	(7) QTY
					GROUP 2604 SPECIAL TOOLS	
					FIG. 291 SPECIAL TOOLS	
1	PEHZZ	5120012087753	78514	23615	FIXTURE ASSEMBLY,HO HOLDER, INJECTION PUMP,BOI: SEE PARA. 5.H. PART OF KIT P/N 57K0266.....	
2	XAHZZ		78514	23614	.PLATE ASSEMBLY.....	
3	PAHZZ	5310012597433	78514	13382	.NUT,PLAIN,HEXAGON.....	
4	PAHZZ	5305012536508	78514	13396	.SCREW,CAP,SOCKET HE.....	
5	PAHZZ	5310012582639	84760	10498	.WASHER,FLAT.....	
6	PEHZZ	5180011890448	84760	18411	TOOL KIT,BUSHING THROTTLE SHAFT INSTALLER,BOI: SEE PARA. 5.H PART OF KIT P/N 57K0266.....	
7	PFHZZ	5120012511901	84760	17787	.BRACE,INSTALLER.....	
8	PAHZZ	5306012552630	84760	17777	.ROD,THREADED END.....	
9	PAHZZ	5310012579034	84760	15385	.NUT,PLAIN,HEXAGON.....	
10	PAHZZ	5310012579101	84760	15384	.WASHER,FLAT.....	
11	PAHZZ	3120012559328	84760	15383	.BUSHING,SLEEVE.....	
12	PEHZZ	5120012081767	84760	16314	REMOVAL TOOL FUEL INJECTION PUMP PILOT TUBE,BOI: SEE PARA. 5.H PART OF KIT P/N 57K0266.....	
13	PEHZZ	5120012075563	78514	20548	WRENCH,END CAP INJECTION PUMP,BOI: SEE PARA. 5.H. PART OF KIT P/N 57K0266.....	
14	PEHZZ	5120012087771	78514	23805	INSERTER,BEARING AN INJECTION PUMP, BOI: SEE PARA. 5.H. PART OF KIT P/N 57K0266.....	
15	PEHZZ	5120011970236	78514	16313	GOVERNOR ASSEMBLY ROTOR SUPPORT, INJECTION PUMP,BOI: SEE PARA. 5.H. PART OF KIT P/N 57K0266.....	
16	PEHZZ	5120012087752	78514	22727	INSTALLATION TOOL,D INJECTION PUMP DRIVE,BOI: SEE PARA. 5.H. PART OF KIT P/N 57K0266.....	
17	PEHZZ	5120008167059	84760	26081	RETRACTOR ASSEMBLY DELIVERY VALVE, INJECTION PUMP,BOI: SEE PARA. 5.H. PART OF KIT P/N 57K0266.....	
18	PEHZZ	5210012004526	84760	19969	INDICATOR,DIAL INJECTION PUMP, ROLLER TO ROLLER SETTING,BOI: SEE PARA. 5.H. PART OF KIT P/N 57K0266..	

END OF FIGURE

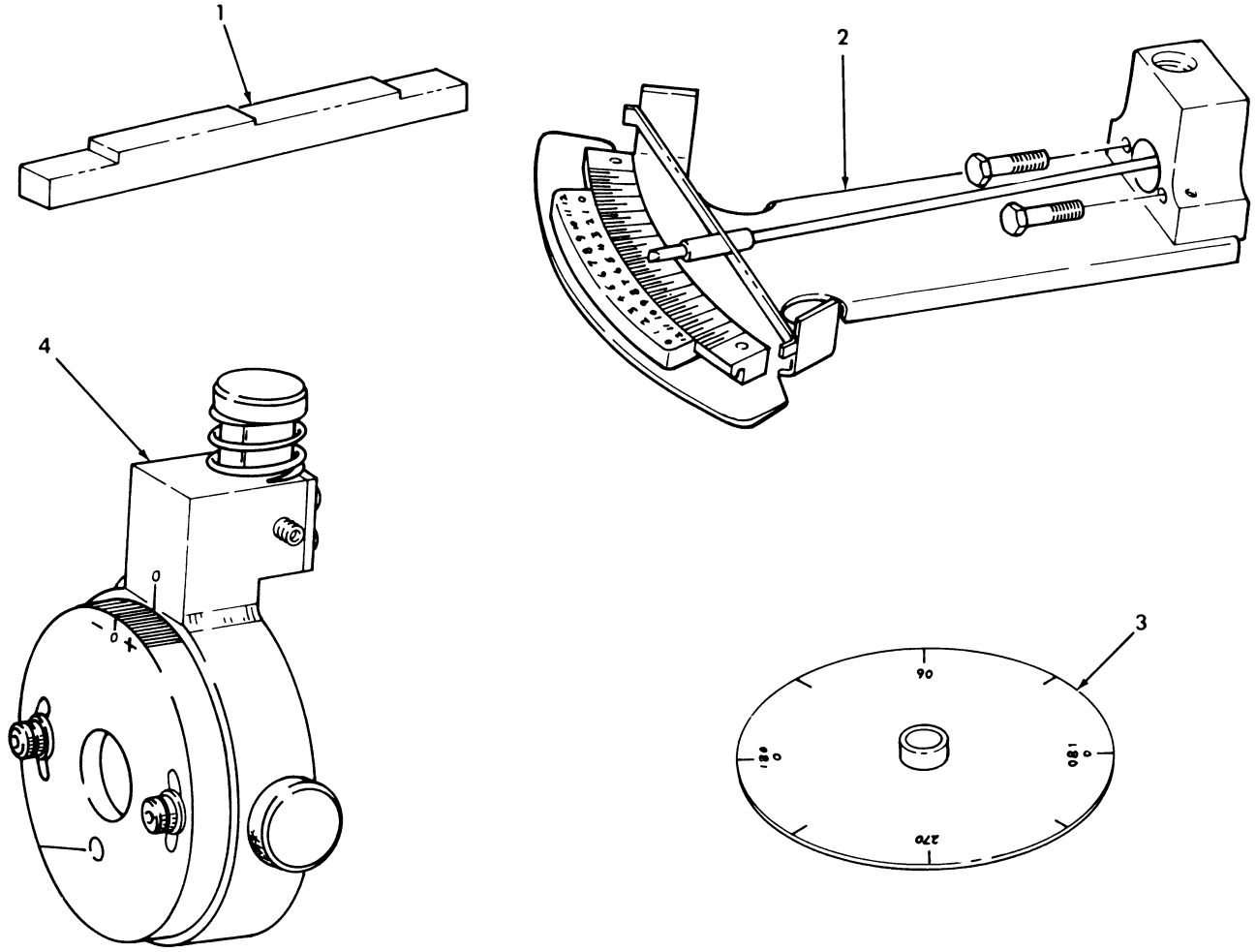

Figure 292. Special Tools.

(1) ITEM NO	(2) SMR CODE	(3) NSN	(4) CAGEC	(5) PART NUMBER	(6) DESCRIPTION AND USABLE ON CODES(UOC)	(7) QTY
					GROUP 2604 SPECIAL TOOLS	
					FIG. 292 SPECIAL TOOLS	
1	PEHZZ	5210012490370	78514	23080	TOOL,LINKAGE GAP BOI: SEE PARA. 5.H. PART OF KIT P/N 57K0266.....	
2	PEHZZ	5210012490368	78514	23745	INDICATOR,AUTOMATIC BOI: SEE PARA. 5.H. PART OF KIT P/N 57K0266.....	
3	PEHZZ	6675012472286	78514	22089	PROTRACTOR,CIRCULAR BOI: SEE PARA. 5.H. PART OF KIT P/N 57K0266.....	
4	PEHZZ	5220012470361	78514	23715	GAGE,COMPARATOR,AIR BOI: SEE PARA. 5.H. PART OF KIT P/N 57K0266.....	

END OF FIGURE

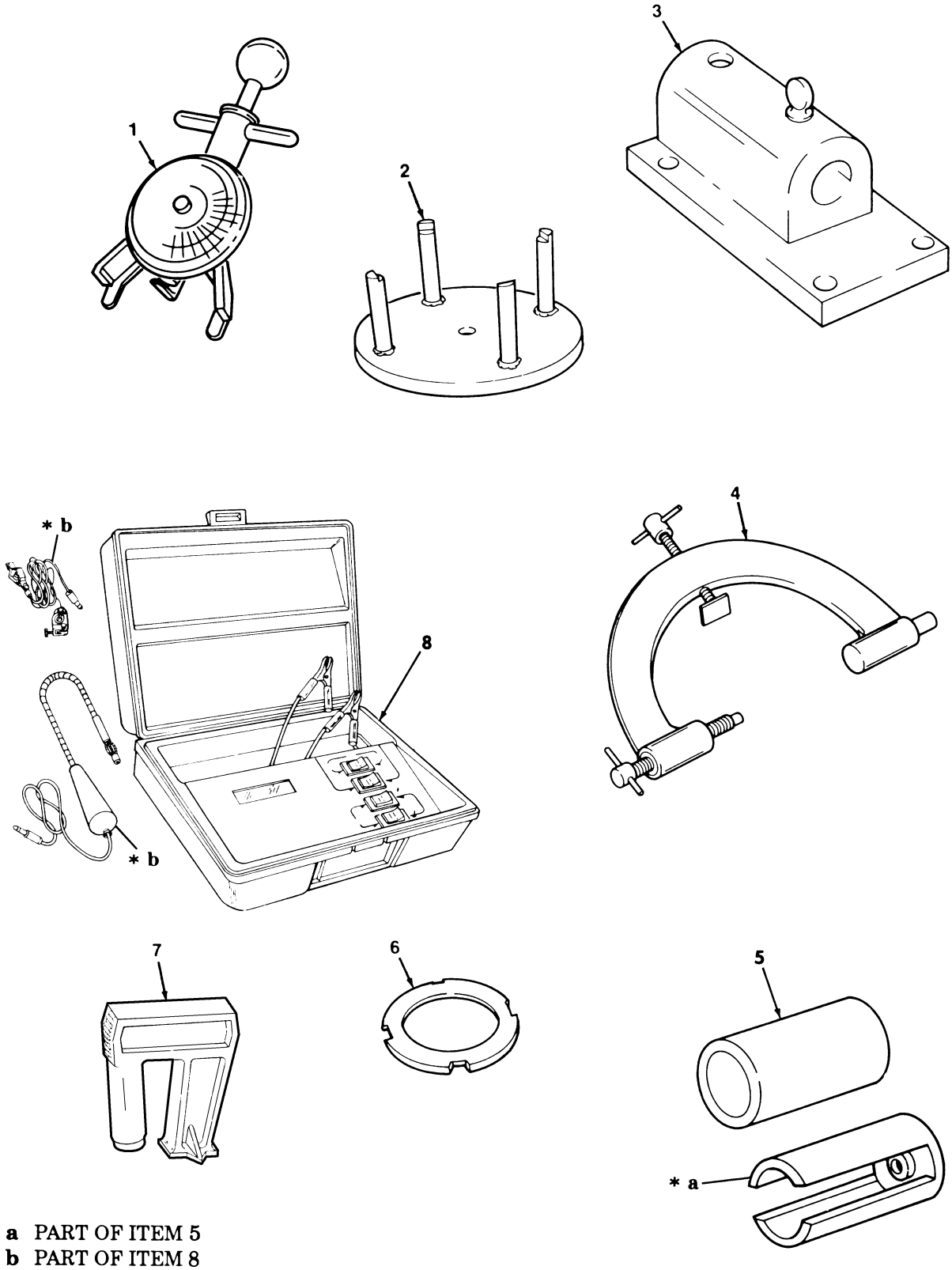

* **a** PART OF ITEM 5
* **b** PART OF ITEM 8

Figure 293. Special Tools, Drive Belts and Transmission.

(1) ITEM NO	(2) SMR CODE	(3) NSN	(4) CAGEC	(5) PART NUMBER	(6) DESCRIPTION AND USABLE ON CODES(UOC)	(7) QTY
					GROUP 2604 SPECIAL TOOLS	
					FIG. 293 SPECIAL TOOLS,DRIVE BELTS AND TRANSMISSION	
1	PEOZZ	6635010933710	33287	BT-33-73F	TENSIOMETER,DIAL IN BOI: SEE PARA. 5.H. PART OF KIT P/N 57K0267.....	
2	PEHZZ	5120012108793	33287	J4670-01	COMPRESSOR,CLUTCH,S SPRING,BOI: SEE PARA. 5.H PART OF KIT P/N 57K0266.....	
3	PEHZZ	5120011444484	33287	J3289-20	BASE,HOLDING FIXTUR TRANSMISSION, BOI: SEE PARA. 5.H. PART OF KIT P/N 57K0266.....	
4	PEHZZ	5120011987583	33287	J8763-B	HOLDING FIXTURE,TRA TRANSMISSION, BOI: SEE PARA. 5.H. PART OF KIT P/N 57K0266.....	
5	PEHZZ	4910011788865	25341	J21795-02	HOLDING UNIT,GEAR TRANSMISSION,BOI: SEE PARA. 5.H. PART OF KIT P/N 57K0266.....	
6	PEHZZ	4910012101318	33287	J21664	ADAPTER,COMPRESSOR CLUTCH SPRING, BOI: SEE PARA. 5.H. PART OF KIT P/N 57K0266.....	
7	PEFZZ	4910012313671	55719	MT95	GAGE,TIMING,DIESEL BOI: SEE PARA. 5.H. PART OF KIT P/N 57K0268.....	
8	PEFZZ	5180011863114	33287	J33127	TOOL KIT,ENGINE TIM DYNAMIC,BOI: SEE PARA. 5.H. PART OF KIT P/N 57K0268.....	

END OF FIGURE

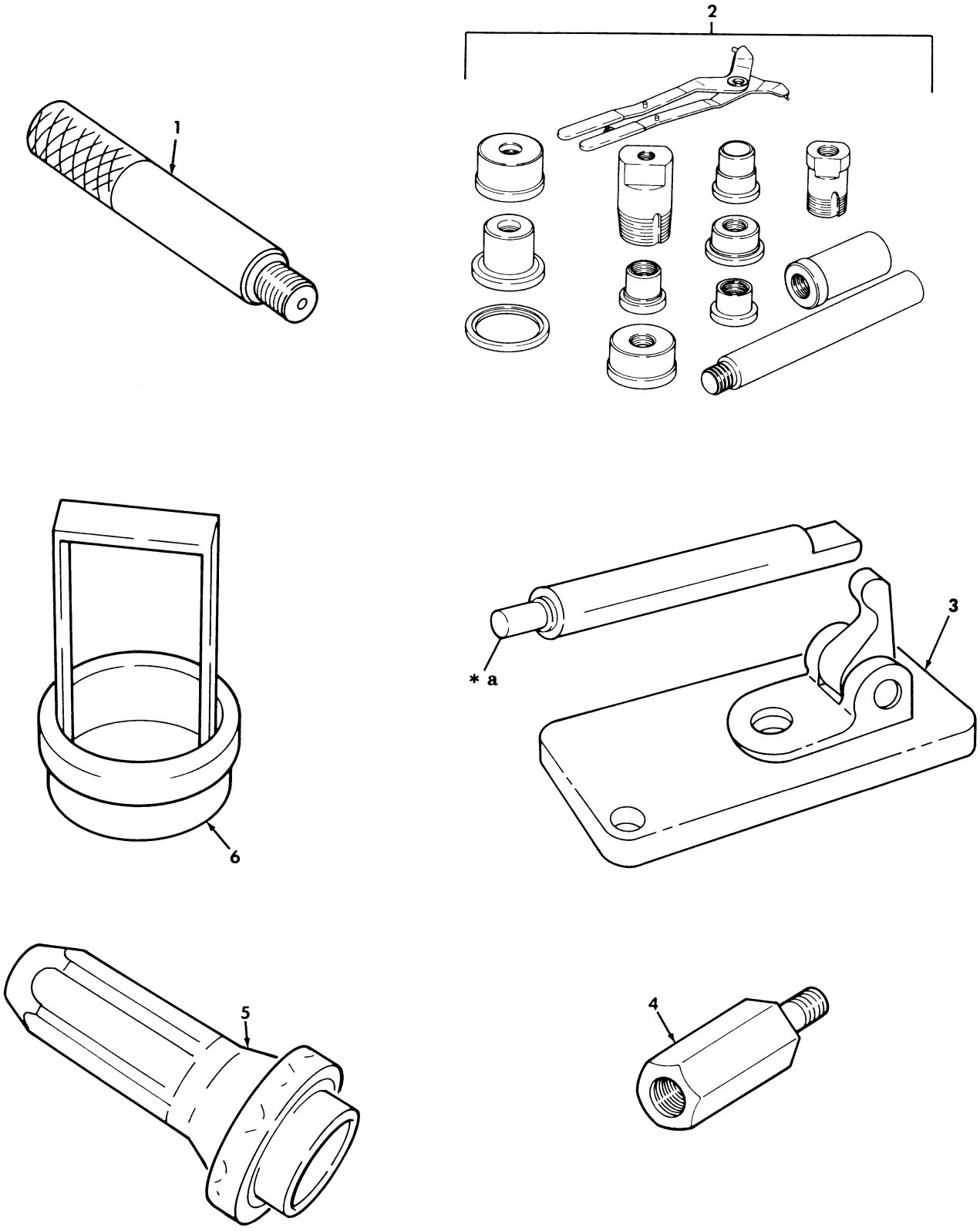

* a PART OF ITEM 3

Figure 294. Special Tools, Transmission.

(1) ITEM NO	(2) SMR CODE	(3) NSN	(4) CAGEC	(5) PART NUMBER	(6) DESCRIPTION AND USABLE ON CODES(UOC)	(7) QTY
					GROUP 2604 SPECIAL TOOLS	
					FIG. 294 SPECIAL TOOLS,TRANSMISSION	
1	PEOZZ	5120006772259	33287	J8092	HANDLE,DRIVER TRANSMISSION,BOI: SEE PARA. 5.H. PART OF KIT P/N 57K0267.....	
2	PEHZZ	5180011959777	33287	J21465-01	TOOL SET,BUSHING IN TRANSMISSION, BOI: SEE PARA. 5.H. PART OF KIT P/N 57K0266.....	
3	PEHZZ	4910011780722	25341	J-21370-A	GAGE,PIN SELECTOR BAND APPLY,BOI: SEE PARA. 5.H. PART OF KIT P/N 57K0266.....	
4	PEHZZ	5120011308865	33287	J6471-2	HANDLE,SLIDE HAMMER SLIDE HAMMER, 5/8-16, 3/8-16,BOI: SEE PARA. 5.H. PART OF KIT P/N 57K0266.....	
5	PEFZZ	5120011761845	25341	J21359-A	INSERTER,SEAL TRANSMISSION OIL PUMP,BOI: SEE PARA. 5.H. PART OF KIT P/N 57K0268.....	
6	PEHZZ	4910012090729	33287	J24396	TOOL,ALIGNMENT,CLUT INTERMEDIATE, BOI: SEE PARA. 5.H. PART OF KIT P/N 57K0266.....	

END OF FIGURE

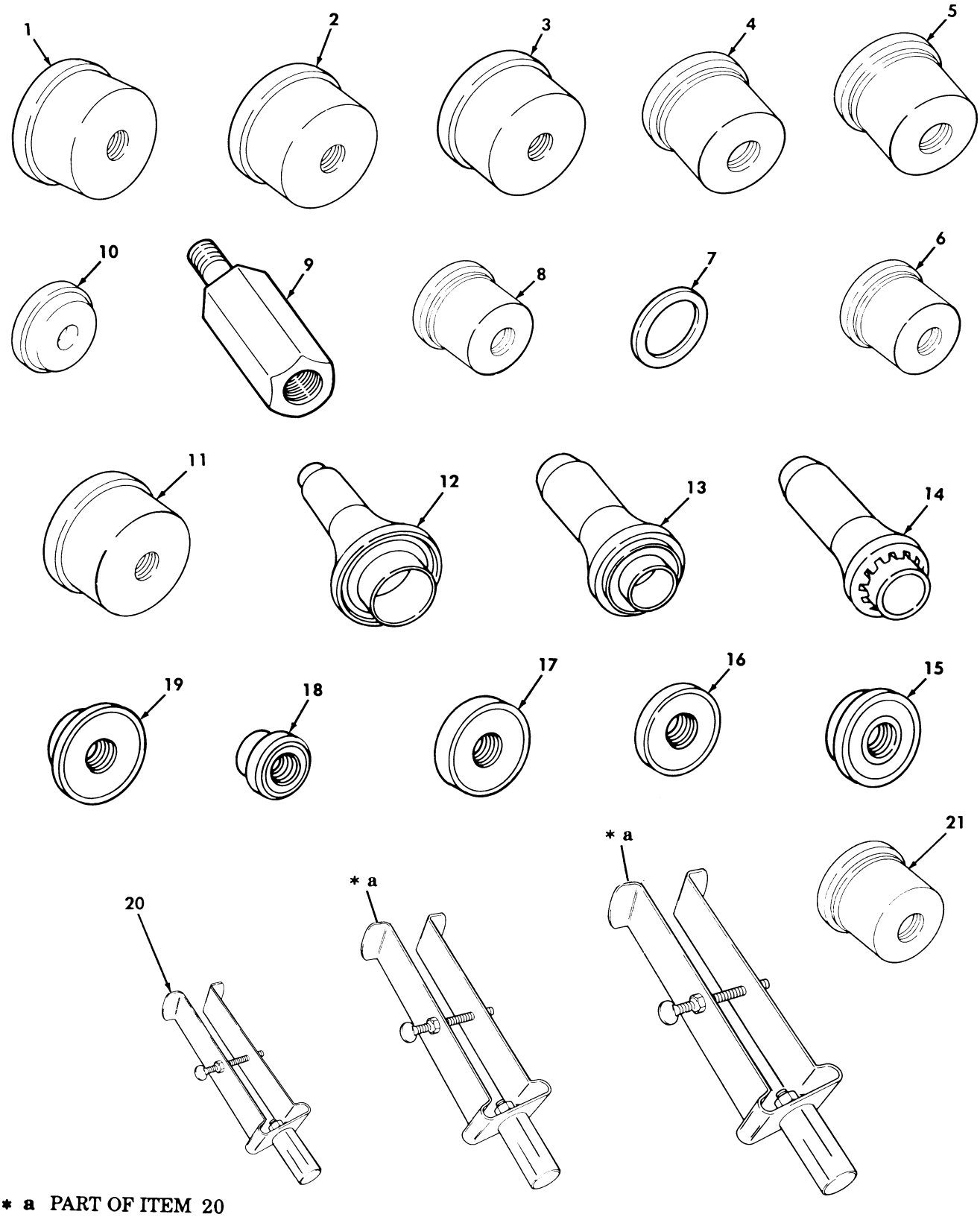

* a PART OF ITEM 20

Figure 295. Special Tools, Transfer Case.

(1) ITEM NO	(2) SMR CODE	(3) NSN	(4) CAGEC	(5) PART NUMBER	(6) DESCRIPTION AND USABLE ON CODES(UOC)	(7) QTY
					GROUP 2604 SPECIAL TOOLS	
					FIG. 295 SPECIAL TOOLS,TRANSFER CASE	
1	PEHZZ	5120011960084	33287	J29166	INSERTER,BEARING AN REAR OUTPUT, BOI: SEE PARA. 5.H. PART OF KIT P/N 57K0266.....	
2	PEHZZ	5120011694876	25341	J-29168	INSERTER,BEARING AN FRONT OUTPUT, BOI: SEE PARA. 5.H. PART OF KIT P/N 57K0266.....	
3	PEHZZ	5120011703278	25341	J-29167	INSERTER,BEARING AN FRONT OUTPUT SHAFT,FRONT BEARING,BOI: SEE PARA. 5.H. PART OF KIT P/N 57K0266.....	
4	PEHZZ	5120011952721	33287	J29163	INSERTER,BEARING AN FRONT OUTPUT SHAFT REAR BEARING,BOI: SEE PARA. 5.H. PART OF KIT P/N 57K0266.....	
5	PEHZZ	5120011857955	33287	J29169	INSERTER,BEARING AN INPUT GEAR,BOI: SEE PARA. 5.H. PART OF KIT P/N 57K0266.....	
6	PEHZZ	5120012654872	33287	J-35307	INSERTER,BEARING AN MAINSHAFT,BOI: SEE PARA. 5.H. PART OF KIT P/N 57K0266.....	
7	PEHZZ	5120012476629	33287	J29185-2	INSTALLER,ANNULUS B ANNULUS GEAR BUSHING,BOI: SEE PARA. 5.H PART OF KIT P/N 57K0266.....	
8	PEHZZ	5120011857956	33287	J29185	INSERTER,BEARING AN BOI: SEE PARA. 5.H. PART OF KIT P/N 57K0266.....	
9	PEHZZ	5120013915131	33287	J6471-8	ADAPTER,MECHANICAL SLIDE HAMMER,5/8-18 1/2-13,BOI: SEE PARA. 5.H. PART OF KIT P/N 57K0266.....	
10	PEHZZ	5120011858024	33287	J7818	INSERTER,BEARING AN RETAINER,BOI: SEE PARA. 5.H. PART OF KIT P/N 57K0266.....	
11	PEHZZ	5120011954551	33287	J29170	REMOVER,BEARING AND INPUT GEAR,BOI: SEE PARA. 5.H. PART OF KIT P/N 57K0266.....	
12	PEHZZ	5120013573632	33287	J-33831	INSERTER,SEAL INPUT GEAR SEAL,BOI: SEE PARA. 5.H. PART OF KIT P/N 57K0266.....	
13	PEHZZ	5120012271680	33287	J22661	INSERTER,SEAL OUTPUT SHAFT, BOI: SEE PARA. 5.H. PART OF KIT P/N 57K0236 PART OF KIT P/N 57K0266.....	
14	PEHZZ	5120013613101	33287	J-33843	INSERTER,SEAL EXTENSION HOUSING SEAL,BOI: SEE PARA. 5.H. PART OF KIT P/N 57K0236 PART OF KIT P/N 57K0266	
15	PEHZZ	5120013573633	33287	J-33826	INSERTER AND REMOVE BEARING INSTALLER,BOI: SEE PARA. 5.H. PART OF KIT P/N 57K0236 PART OF KIT P/N 57K0266.....	
16	PEHZZ	5120013573629	33287	J-33829	INSERTER,BEARING AN MAINSHAFT PILOT BEARING,BOI: SEE PARA. 5.H. PART OF KIT P/N 57K0236.....	
17	PEHZZ	5120013573630	33287	J-33833	INSERTER,BEARING AN OUTPUT SHAFT	

(1) ITEM NO	(2) SMR CODE	(3) NSN	(4) CAGEC	(5) PART NUMBER	(6) DESCRIPTION AND USABLE ON CODES(UOC)	(7) QTY
					FRONT BEARING,BOI: SEE PARA. 5.H. PART OF KIT P/N 57K0236 PART OF KIT P/N 57K0266.....	
18	PEHZZ	5120013573631	33287	J-33839	REMOVER,BEARING AND EXTENSION HOUSING BUSHING,BOII SEE PARA. 5.H. PART OF KIT P/N 57K0236 PART OF KIT P/N 57K0266.....	
19	PEHZZ	5120013579123	33287	J-9276-3	INSTALLER,CUP BOI: SEE PARA. 5.H. PART OF KIT P/N 57K0236 PART OF KIT P/N 57K0266.....	
20	PEHZZ	5120012017857	33287	J29369	PULLER,MECHANICAL UNIVERSAL BUSHING AND BEARING,BOI: SEE PARA. 5.H. PART OF KIT P/N 57K0266.....	
21	PEHZZ	5120011857960	33287	J29174	INSERTER,BEARING AN BOI:SEE PARA.5.H PART OF KIT P/N 57K0266....	
KIT	PEHHH	5180013579692	19207	57K0236	TOOL KIT,TRANSMISSS SUPPLEMENTAL KIT,GENERAL SUPPORT.....	
					INSERTER AND REMOVE(1) 295-15	
					INSERTER,BEARING AN(1) 295-16	
					INSERTER,BEARING AN(1) 295-17	
					INSERTER,SEAL (1) 295-13	
					INSERTER,SEAL (1) 295-14	
					INSTALLER,CUP (1) 295-19	
					REMOVER,BEARING AND(1) 295-18	

END OF FIGURE

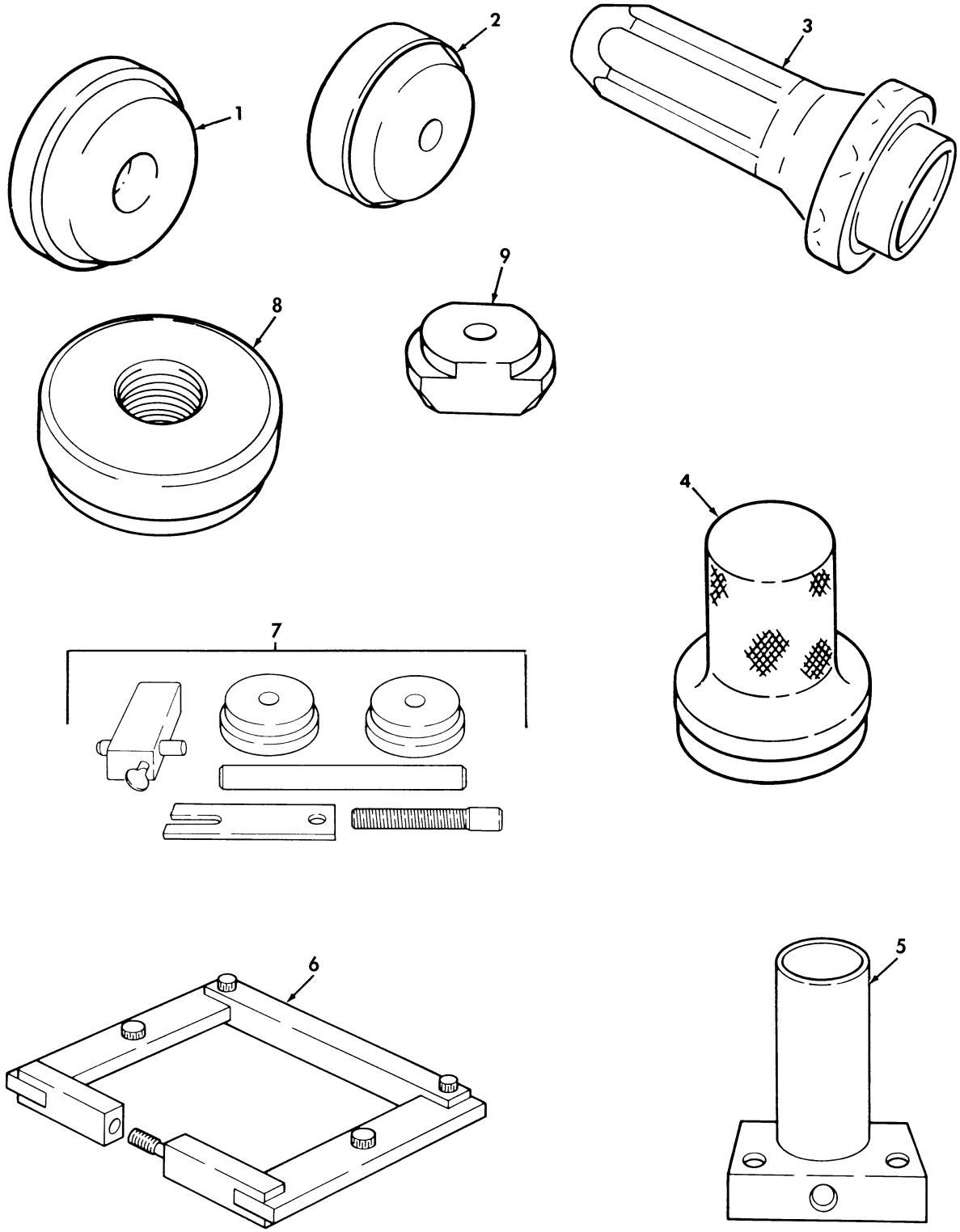

Figure 296. Special Tools, Axle Differential.

(1) ITEM NO	(2) SMR CODE	(3) NSN	(4) CAGEC	(5) PART NUMBER	(6) DESCRIPTION AND USABLE ON CODES(UOC)	(7) QTY
					GROUP 2604 SPECIAL TOOLS	
					FIG. 296 SPECIAL TOOLS,AXLE DIFFERENTIAL	
1	PEHZZ	5120011873660	33287	J21787	REMOVER,BEARING AND BOI: SEE PARA. 5.H. PART OF KIT P/N 57K0266.....	
2	PEHZZ	5120011857964	33287	J8611-01	INSERTER,BEARING AN BOI: SEE PARA. 5.H. PART OF KIT P/N 57K0266.....	
3	PEFZZ	4910011795530	25341	J-29162	DRIVE TOOL,SEAL BOI: SEE PARA. 5.H. PART OF KIT P/N 57K0268.....	
4	PEFZZ	5120011873659	33287	J33142	INSERTER,BEARING AN BOI: SEE PARA. 5.H. PART OF KIT P/N 57K0268.....	
5	PEHZZ	5120012188235	33287	J-33149-A	ADAPTER,AXLE FIXTUR BOI: SEE PARA. 5.H. PART OF KIT P/N 57K0266.....	
6	PEHZZ	4910001052823	80604	W-129-B	SPREADER,AXLE HOUSI BOI: SEE PARA. 5.H. PART OF KIT P/N 57K0266.....	
7	PEHZZ	5180012168643	33287	J-35199	TOOL KIT,PINION BOI: SEE PARA. 5.H. PART OF KIT P/N 57K0266.....	
8	PEHZZ	5120011857962	33287	J8608	INSERTER,BEARING AN BOI: SEE PARA. 5.H. PART OF KIT P/N 57K0266.....	
9	PEHZZ	5120011857957	33287	J21786	REMOVER,BEARING AND BOI: SEE PARA. 5.H PART OF KIT P/N 57K0266.....	
KIT	PEHHH	5310013897561	19207	57K0266	TOOL KIT,VEHICULAR. GENERAL SUPPORT.	
					ADAPTER,AXLE FIXTUR(1) 296-5	
					ADAPTER,COMPRESSOR (1) 293-6	
					ADAPTER,MECHANICAL (1) 295-9	
					BASE,HOLDING FIXTUR(1) 293-3	
					COMPRESSOR,CLUTCH,S(1) 293-2	
					FIXTURE ASSEMBLY,HO(1) 291-1	
					GAGE,COMPARATOR,AIR(1) 292-4	
					GAGE,PIN SELECTOR (1) 294-3	
					GOVERNOR ASSEMBLY (1) 291-15	
					HANDEL,SLIDE HAMMER(1) 294-4	
					HOLDING FIXTURE,TRA(1) 293-4	
					HOLDING UNIT,GEAR (1) 293-5	
					INDICATOR,AUTOMATIC(1) 292-2	
					INDICATOR,DIAL (1) 291-18	
					INSERTER AND REMOVE(1) 294-15	
					INSERTER,BEARING AN(1) 291-14	
					INSERTER,BEARING AN(1) 295-1	
					INSERTER,BEARING AN(1) 295-2	
					INSERTER,BEARING AN(1) 295-3	
					INSERTER,BEARING AN(1) 295-4	
					INSERTER,BEARING AN(1) 295-5	
					INSERTER,BEARING AN(1) 295-6	
					INSERTER,BEARING AN(1) 295-8	
					INSERTER,BEARING AN(1) 295-10	
					INSERTER,BEARING AN(1) 295-17	
					INSERTER,BEARING AN(1) 295-21	
					INSERTER,BEARING AN(1) 296-2	
					INSERTER,BEARING AN(1) 296-8	
					INSERTER,SEAL (1) 295-12	

(1) ITEM NO	(2) SMR CODE	(3) NSN	(4) CAGEC	(5) PART NUMBER	(6) DESCRIPTION AND USABLE ON CODES(UOC)	(7) QTY
					INSERTER,SEAL (1) 295-13	
					INSERTER,SEAL (1) 295-14	
					INSTALLER,ANNULUS (1) 295-7	
					INSTALLER,CUP (1) 295-19	
					INSTALLER,TOOL,D (1) 291-16	
					PROTRACTOR,CIRCULAR(1) 292-3	
					PULLER,MECHANICAL (1) 290-4	
					PULLER,MECHANICAL (1) 295-20	
					REMOVAL TOOL (1) 291-12	
					REMOVER,BEARING AND(1) 295-11	
					REMOVER,BEARING AND(1) 295-18	
					REMOVER,BEARING AND(1) 296-1	
					RETRACTOR ASSEMBLY (1) 291-17	
					SCREWDRIVER ATTACHM(1) 290-18	
					SPREADER,AXLE HOUSI(1) 296-6	
					STAND,MAINTENANCE,A(1) 289-2	
					TOOL KIT,BUSHING (1) 291-6	
					TOOL KIT,PINION (1) 296-7	
					TOOL SET,BUSHING IN(1) 294-2	
					TOOL,ALIGNMENT,CLUT(1) 294-6	
					TOOL,LINKAGE GAP (1) 292-1	
					WRENCH,END CAP (1) 291-13	

END OF FIGURE

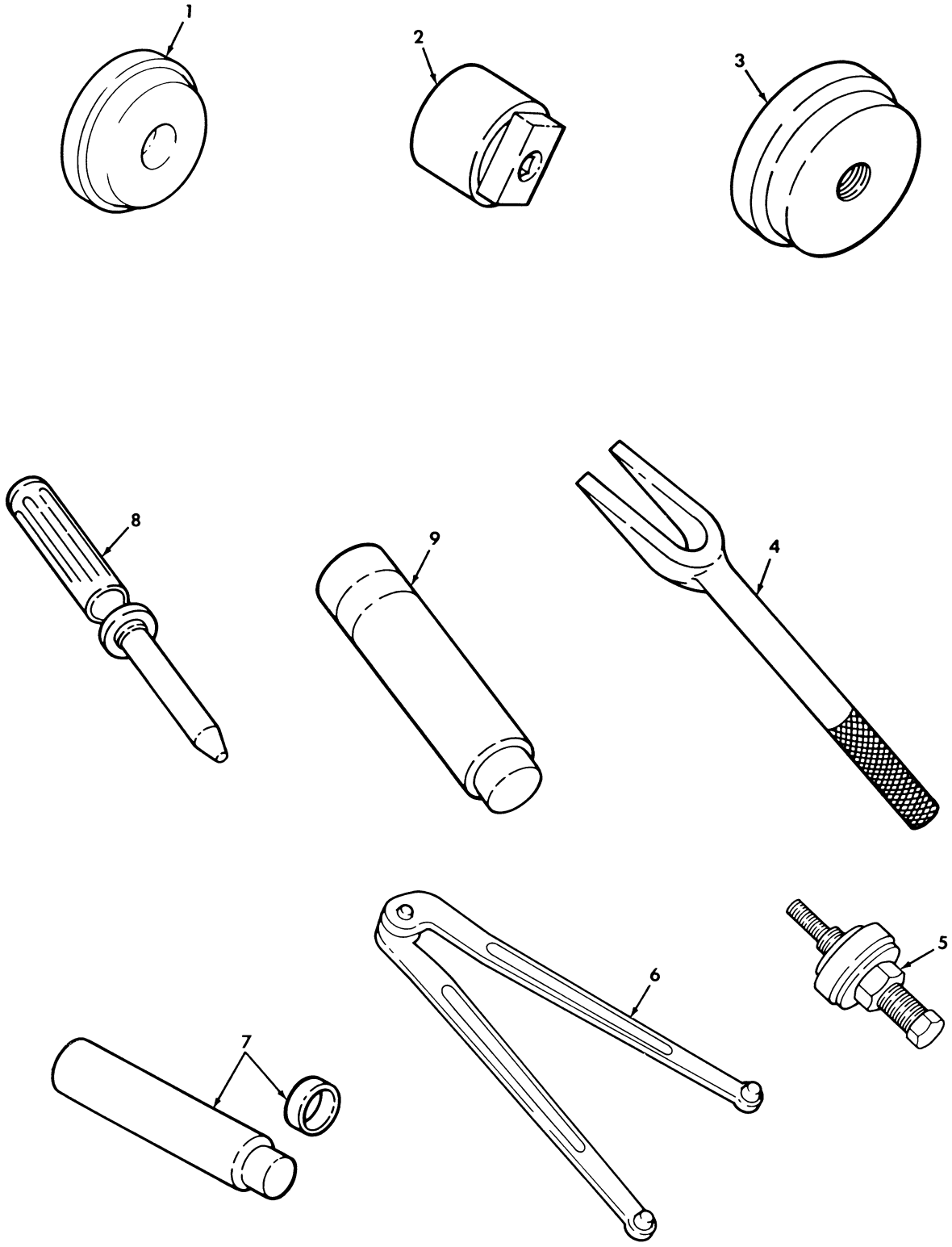

Figure 297. Special Tools, Geared Hub and Steering.

(1) ITEM NO	(2) SMR CODE	(3) NSN	(4) CAGEC	(5) PART NUMBER	(6) DESCRIPTION AND USABLE ON CODES(UOC)	(7) QTY
					GROUP 2604 SPECIAL TOOLS	
					FIG. 297 SPECIAL TOOLS,GEARED HUB AND STEERING	
1	PEOZZ	5120011873607	33287	J33143	INSERTER,SEAL GEARED HUB INPUT,BOI: SEE PARA. 5.H PART OF KIT P/N 57K0267.....	
2	PEOZZ	5120011857963	33287	J33144	SOCKET,SOCKET WRENC GEARED HUB,BOI: SEE PARA. 5.H PART OF KIT P/N 57K0267.....	
3	PEOZZ	5120012290842	33287	J35184	INSERTER,SEAL GEARED HUB,BOI: SEE PARA. 5.H PART OF KIT P/N 57K0267...	
4	PEOZZ	5120008804268	19207	11595179	REMOVAL TOOL,TIE RO BALL JOINTS, BOI: SEE PARA. 5.H PART OF KIT P/N 57K0267.....	
5	PEOZZ	4910011792517	33287	J25033-B	INSTALLER,POWER STE POWER STEERING PUMP PULLEY,BOI: SEE PARA. 5.H PART OF KIT P/N 57K0267.....	
6	PEFZZ	5120010826436	25341	J7624	WRENCH,SPANNER PRELOAD BEARING STEERING GEAR,BOI: SEE PARA. 5.H PART OF KIT P/N 57K0268.....	
7	PEFZZ	5120010826447	25341	J-6278	INSTALLING AND REMO PITMAN SHAFT BEARING,BOI: SEE PARA. 5.H PART OF KIT P/N 57K0268.....	
8	PEFZZ	5120011791032	33287	J-21552	PUNCH,HAND TOOL RACK PISTON STEERING GEAR,BOI: SEE PARA. 5.H PART OF KIT P/N 57K0268.....	
9	PEFZZ	5120011857965	33287	J6221	REMOVER,BEARING AND BEARING, ADJUSTER PLUG,BOI: SEE PARA. 5.H PART OF KIT P/N 57K0268.....	
					END OF FIGURE	

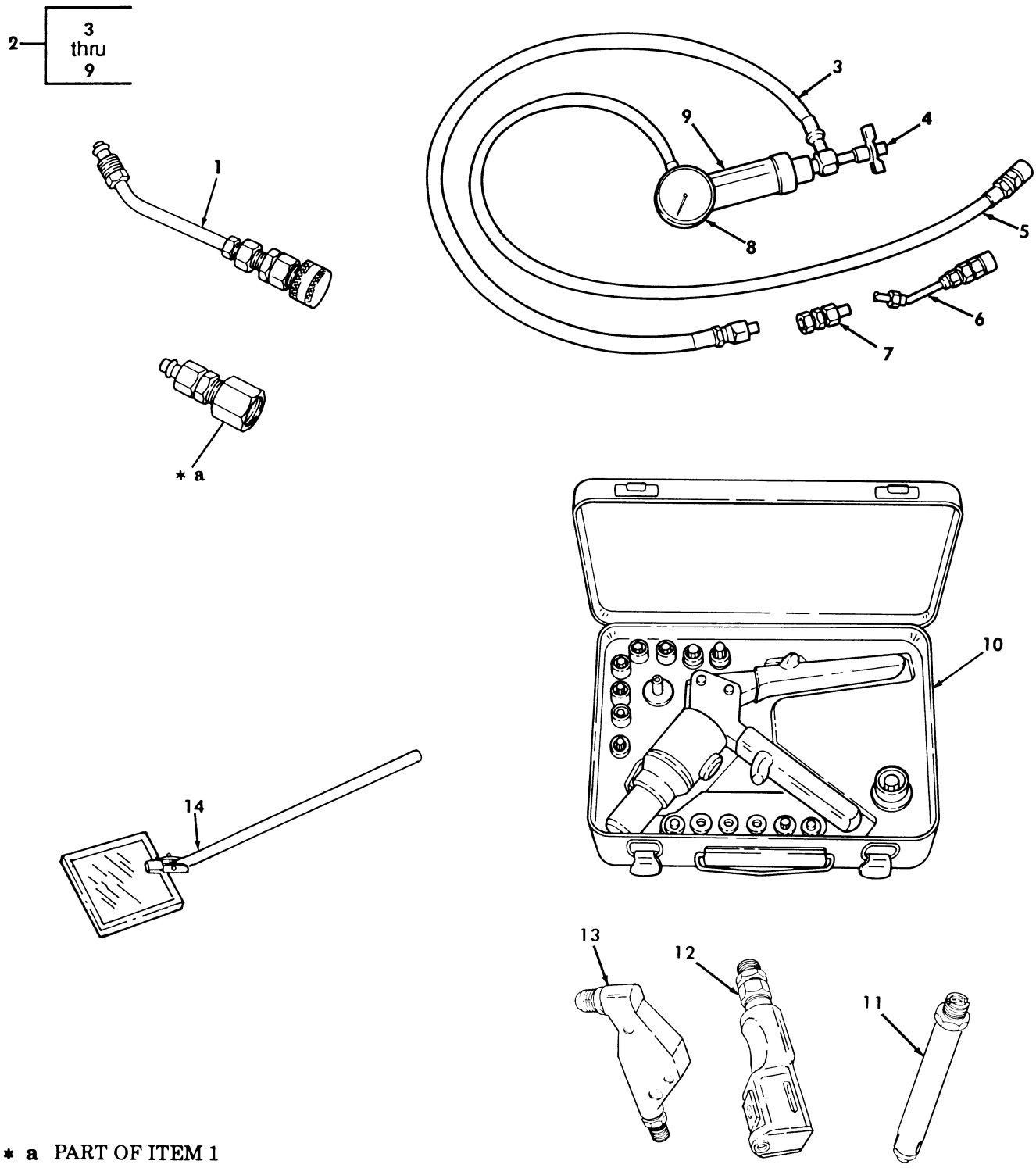

* a PART OF ITEM 1

Figure 298. Special Tools, Steering Pump, Body, and Speedometer Drive.

(1) ITEM NO	(2) SMR CODE	(3) NSN	(4) CAGEC	(5) PART NUMBER	(6) DESCRIPTION AND USABLE ON CODES(UOC)	(7) QTY
					GROUP 2604 SPECIAL TOOLS	
					FIG. 298 SPECIAL TOOLS,STEERING PUMP,BODY,AND SPEEDOMETER DRIVE	
1	PEOZZ	5120012311709	33287	J33141	ADAPTER,POWER STEER BOI: SEE PARA. 5.H PART OF KIT P/N 57K0267.....	
2	PEOOO	4910011857966	19207	12342943	ANALYZER,POWER STEE POWER STEERING PUMP,BOI: SEE PARA. 5.H PART OF KIT P/N 57K0267.....	
* 3	PEOZZ	4720012532809	33287	J25323-17	.HOSE ASSEMBLY,NONME POWER STEERING ANALYZER,BOI: SEE PARA. 5.H.....	
* 4	PEOZZ	4820012526169	33287	J25323-16	.VALVE,REGULATING,FL POWER STEERING ANALYZER,BOI: SEE PARA. 5.H.....	
5	PEOZZ	4720012532810	33287	J25323-18	.HOSE ASSEMBLY,NONME POWER STEERING ANALYZER,BOI: SEE PARA. 5.H.....	
6	PEOZZ	4730012546023	33287	J25323-2	.COUPLING HALF,QUICK POWER STEERING ANALYZER,BOI: SEE PARA. 5.H.....	
7	PEOZZ	3020012552906	33287	J25323-1	.ADAPTER,GEAR POWER STEERING ANALYZER,BOI: SEE PARA. 5.H.....	
8	PEOZZ	6685012563406	33287	J25323-5	.GAGE,PRESSURE,DIAL POWER STEERING ANALYZER,BOI: SEE PARA. 5.H.....	
9	PEOZZ	6680012536782	33287	J25323-7	.INDICATOR,RATE OF F POWER STEERING ANALYZER,BOI: SEE PARA. 5.H.....	
10	PEOZZ	5180012014978	64878	D100-MIL-1	TOOL KIT,BLIND RIVE BOI: SEE PARA. 5.H PART OF KIT P/N 57K0267.....	
11	PEFZZ	5130011045370	11815	H749-456	PULLING HEAD,RIVETE RIVETER KIT, BOI: SEE PARA. 5.H PART OF KIT P/N 57K0268.....	
* 12	PEFZZ	5130010447196	11815	RV818	PULLING HEAD,RIVETE RIVETER KIT, BOI: SEE PARA. 5.H PART OF KIT P/N 57K0268.....	
* 13	PEFZZ	5130010453507	11815	RV817	PULLING HEAD,RIVETE RIGHT ANGLE, BOI: SEE PARA. 5.H PART OF KIT P/N 57K0268.....	
14	PEOZZ	5120006186902	77335	71-510	MIRROR,INSPECTION SPEEDOMETER DRIVE,BOI: SEE PARA. 5.H PART OF KIT P/N 57K0267.....	
					END OF FIGURE	

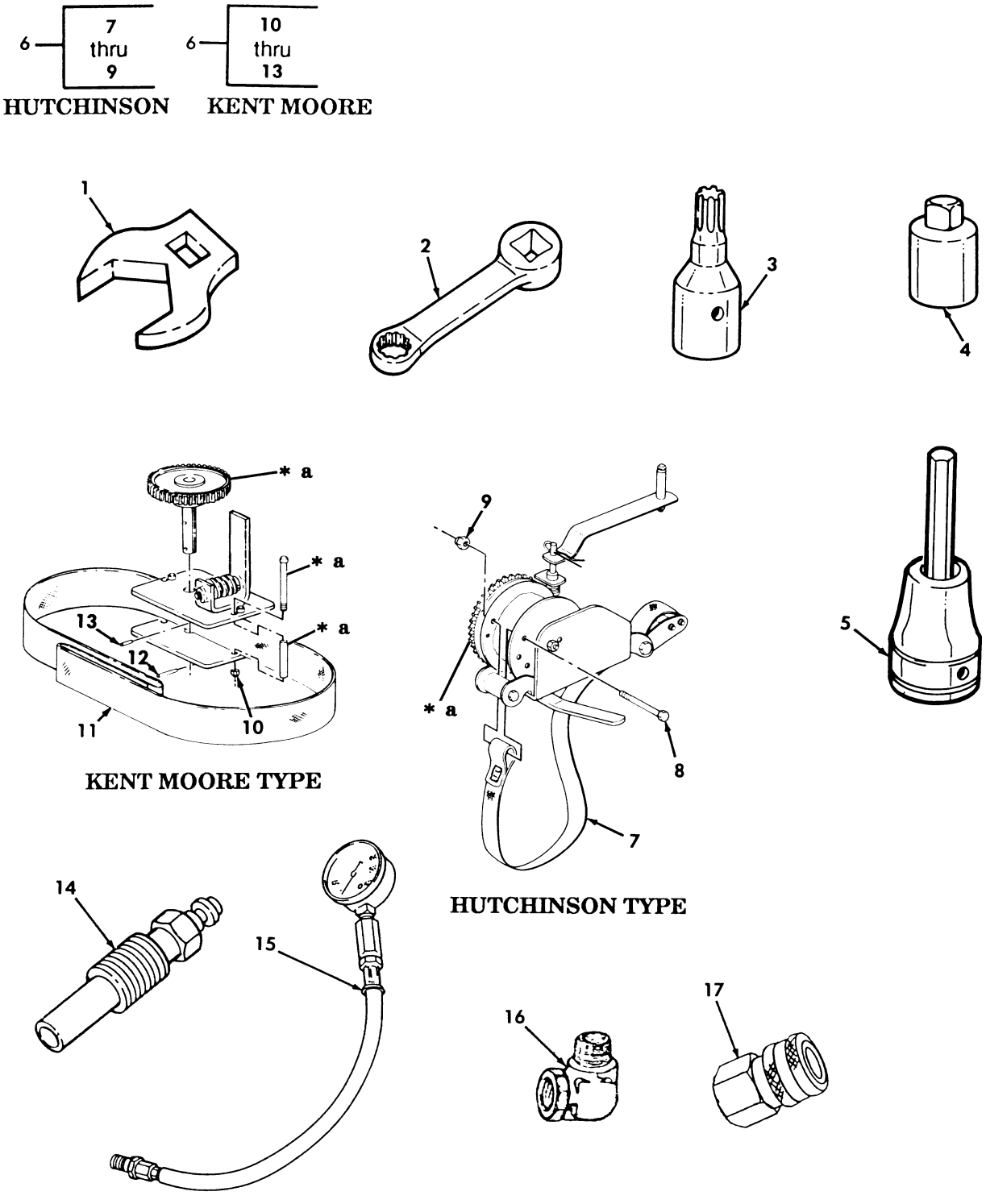

* a PART OF ITEM 6

Figure 299. Special Tools, Multipurpose.

(1) ITEM NO	(2) SMR CODE	(3) NSN	(4) CAGEC	(5) PART NUMBER	(6) DESCRIPTION AND USABLE ON CODES(UOC)	(7) QTY
					GROUP 2604 SPECIAL TOOLS	
					FIG. 299 SPECIAL TOOLS,MULTIPURPOSE	
* 1	PEOZZ	5120013351094	55719	FC18B	CROWFOOT ATTACHMENT 9/16, 3/8 DRIVE,BOI: SEE PARA. 5.H PART OF KIT P/N 57K0267.....	
* 1	PEOZZ	5120013351096	55719	FC22B	CROWFOOT ATTACHMENT 11/16,3/8 DRIVE,BOI: SEE PARA. 5.H PART OF KIT P/N 57K0267.....	
* 1	PEOZZ	5120013351099	55719	FC28B	CROWFOOT ATTACHMENT 7/8,3/8 DRIVE, BOI: SEE PARA. 5.H PART OF KIT P/N 57K0267.....	
* 1	PEOZZ	5120010798023	55719	FCOM14	CROWFOOT ATTACHMENT 1/2,3/8 DRIVE, BOI: SEE PARA. 5.H PART OF KIT P/N 57K0267.....	
* 1	PEOZZ	5120013351100	55719	FC30B	CROWFOOT ATTACHMENT 15/16,3/8 DRIVE,BOI: SEE PARA. 5.H PART OF KIT P/N 57K0267.....	
1	PEOZZ	5120001848398	55719	AN8506-4	CROWFOOT ATTACHMENT 5/8,3/8 DRIVE, BOI: SEE PARA. 5.H PART OF KIT P/N 57K0267.....	
2	PEOZZ	5120013673582	55719	SRES18	ADAPTER,TORQUE WREN 9/16,BOI: SEE PARA. 5.H PART OF KIT P/N 57K0267...	
2	PEOZZ	5120013673585	55719	SRES24	ADAPTER,TORQUE WREN 3/4,BOI: SEE PARA. 5.H PART OF KIT P/N 57K0267...	
3	PEFZZ	5120012273159	55719	TLE60	SOCKET,SOCKET WRENC 1/4 DRIVE,BOI: SEE PARA. 5.H PART OF KIT P/N 57K0268.....	
4	PEOZZ	5120002408702	19207	11655788-2	ADAPTER,SOCKET WREN 3/8 DRIVE TO 1/ 2 DRIVE,BOI: SEE PARA. 5.H PART OF KIT P/N 57K0267.....	
5	PEOZZ	5120006838597	55719	FA6A	DRIVER,HEXAGON,HEAD 3/16,3/8 DRIVE, BOI: SEE PARA. 5.H PART OF KIT P/N 57K0267.....	
* 5	PEOZZ	5120014373658	55719	FAM7E	DRIVER,HEXAGON,HEAD 7MM,3/8 DRIVE, BOI: SEE PARA 5.H PART OF KIT P/N 57K0267.....	
6	PEOZZ	5120013355847	33287	J-39250	COMPRESSOR,TOOL,RUN BOI: SEE PARA. 5.H. PART OF KIT P/N 57K0267.....	
7	KFOZZ		62161	528236-05	.STRAP ASSEMBLY RUNFLAT TOOL,BOI: SEE PARA. 5.H PART OF KIT P/N 528240	
8	KFOZZ		62161	1118BAC1048	.BOLT BOI: SEE PARA. 5.H PART OF KIT P/N 528240.....	
9	KFOZZ		62161	1351BAC10SL	.NUT,SELF-LOCKING RUNFLAT TOOL,BOI: SEE PARA. 5.H PART OF KIT P/N 528240.....	
10	KFOZZ		33287	RS-3400-135	.LOCKNUT,HEXAGON BOI: SEE PARA. 5.H PART OF KIT P/N J-39295.....	
11	KFOZZ		33287	J-39250-1	.STRAP ASSEMBLY BOI: SEE PARA. 5.H PART OF KIT P/N J-39295.....	
12	KFOZZ		33287	RS-5701-795	.PIN,SMALL BOI: SEE PARA. 5.H PART OF KIT P/N J-39295.....	

(1) ITEM NO	(2) SMR CODE	(3) NSN	(4) CAGEC	(5) PART NUMBER	(6) DESCRIPTION AND USABLE ON CODES(UOC)	(7) QTY
13	KFOZZ		33287	RS-5700-125	.PIN,SHAFT BOI: SEE PARA. 5.H PART OF KIT P/N J-39295.....	
14	PEFZZ	4910012382551	33287	J26999-30	ADAPTER,CYLINDER CO BOI: SEE PARA. 5.H PART OF KIT P/N 57K0268.....	
15	PEFZZ	4910007856437	33287	J6692	TESTER,CYLINDER COM BOI: SEE PARA. 5.H PART OF KIT P/N 57K0268.....	
16	PEFZZ	4730009854804	96906	MS51815-4P	ELBOW,PIPE TO TUBE BOI: SEE PARA. 5.H PART OF KIT P/N 57K0268.....	
17	PEFZZ	4730010425266	33287	J-35209	COUPLING,HALF,QUICK BOI: SEE PARA. 5.H PART OF KIT P/N 57K0268.....	
KIT	PAOZZ	2530013383056	33287	J-39295	REPAIR KIT,BELT RUNFLAT.....	
					LOCKNUT,HEXAGON	(1) 299-10
					PIN,SHAFT	(1) 299-13
					PIN,SMALL	(1) 299-12
					STRAP ASSEMBLY	(1) 299-11
KIT	PAOZZ	4310013455723	62161	D-528240	REPAIR KIT,COMPRESSO RUNFLAT.....	
					BOLT	(1) 299-8
					NUT,SELF-LOCKING	(1) 299-9
					STAPR ASSEMBLY	(1) 299-7
KIT	PEOOO	5180013875455	19207	57K0267	TOOL KIT,VEHICULAR UNIT.....	
					ADAPTER,POWER STEER	(1) 298-1
					ADAPTER,TORQUE WREN	(1) 299-2
					ADAPTER,TORQUE WREN	(1) 299-2
					ADAPTER,SOCKET WREN	(1) 299-4
					ALALYZER,POWER STEE	(1) 298-2
					COMPRESSOR,TOOL RUN	(1) 299-6
					CROWFOOT ATTACHMENT	(1) 299-1
					CROWFOOT ATTACHMENT	(1) 299-1
					CROWFOOT ATTACHMENT	(1) 299-1
					CROWFOOT ATTACHMENT	(1) 299-1
					CROWFOOT ATTACHMENT	(1) 299-1
					CROWFOOT ATTACHMENT	(1) 299-1
					DRIVER,HEXAGON,HEAD	(1) 299-5
					DRIVER,HEXAGON,HEAD	(1) 299-5
					HANDLE,DRIVER	(1) 294-1
					INSERTER,SEAL	(1) 297-1
					INSERTER,SEAL	(1) 297-3
					INSTALLER,POWER STE	(1) 297-5
					MIRROR,INSPECTION	(1) 298-14
					REMOVAL TOOL,TIE RO	(1) 297-4
					SOCKET,SOCKET WRENC	(1) 297-2
					SCREWDRIVER ATTACHM	(1) 290-12
					SCREWDRIVER ATTACHM	(1) 290-14
					SCREWDRIVER ATTACHM	(1) 290-15
					SCREWDRIVER ATTACHM	(1) 290-16
					SCREWDRIVER ATTACHM	(1) 290-17
					TENSIOMETER,DIAL IN	(1) 293-1
					TOOL KIT	(1) 298-10
KIT	PEFFF	5180013897560	19207	57K0268	TOOL KIT,VEHICULAR DIRECT SUPPORT..	
					ADAPTER,CYLINDER	(1) 299-14
					COUPLING,HALF QUICK	(1) 299-17
					CROWFOOT ATTACHMENT	(1) 290-19
					CROWFOOT ATTACHMENT	(1) 290-20

(1) ITEM NO	(2) SMR CODE	(3) NSN	(4) CAGEC	(5) PART NUMBER	(6) DESCRIPTION AND USABLE ON CODES(UOC)	(7) QTY
					DRIVER TOOL,SEAL (1) 296-3	
					ELBOW,PIPE TO TUBE (1) 299-16	
					GAGE,TIMING,DIESEL (1) 293-7	
					INSERTER,BEARING AN(1) 296-4	
					INSERTER,SEAL (1) 294-5	
					INSTALLING AND REMO(1) 297-7	
					LIFTER,VALVE SPRING(1) 290-1	
					PUNCH,HAND TOOL (1) 297-8	
					REMOVER,BEARING AND(1) 297-9	
					SCREWDRIVER ATTACHM(1) 290-13	
					SLING,ENGINE AND TR(1) 290-1	
					SOCKET,SOCKET WRENC(1) 290-3	
					SOCKET,SOCKET WRENC(1) 299-3	
					TESTER,CYLINDER COM(1) 299-15	
					TOOL KIT,ENGINE TIM(1) 293-8	
					WRENCH,SPANNER (1) 297-6	

END OF FIGURE

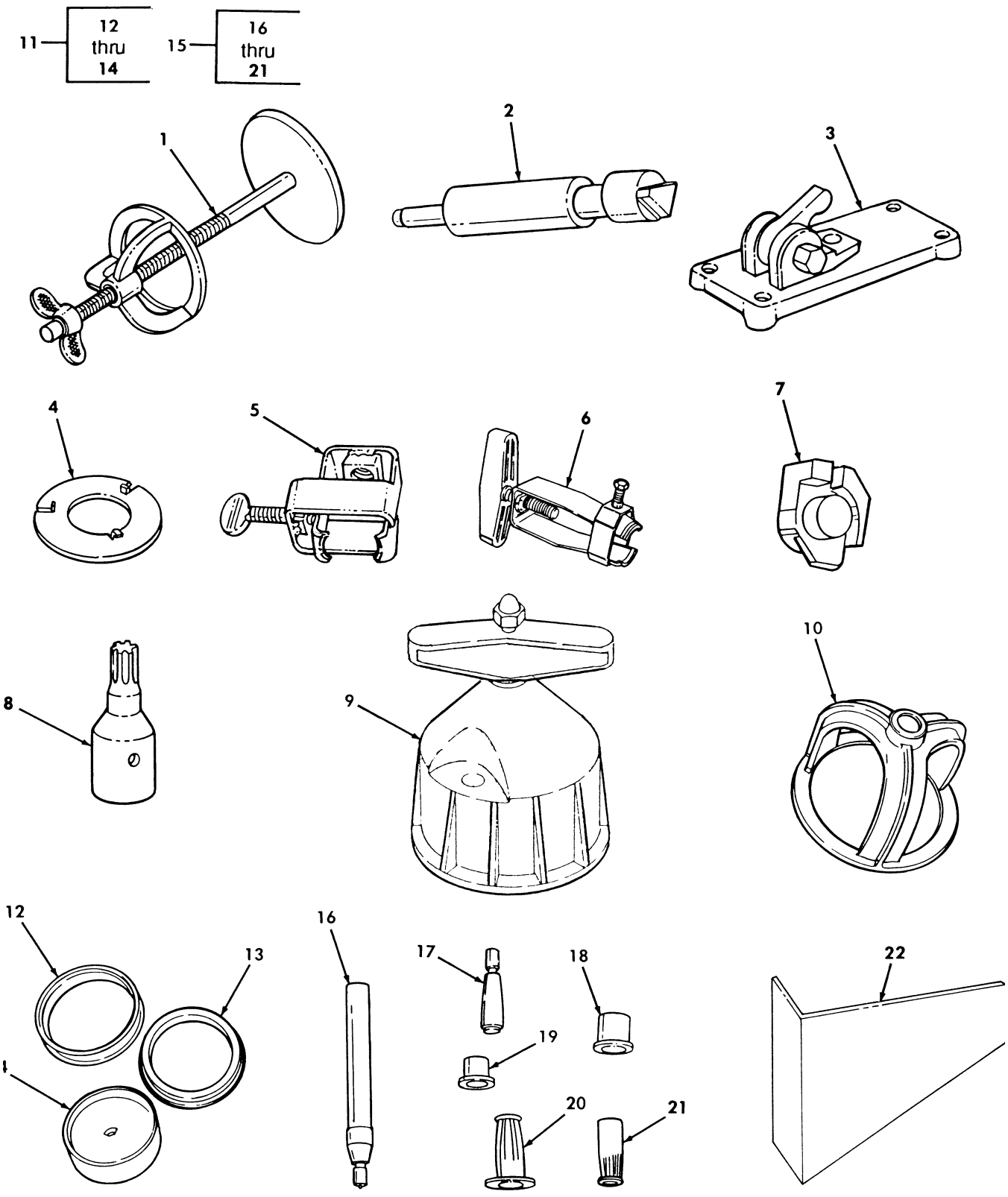

Figure 300. Special Tools, Transmission and Engine.

(1) ITEM NO	(2) SMR CODE	(3) NSN	(4) CAGEC	(5) PART NUMBER	(6) DESCRIPTION AND USABLE ON CODES(UOC)	(7) QTY
					GROUP 2604 SPECIAL TOOLS	
					FIG. 300 SPECIAL TOOLS,TRANSMISSION AND ENGINE	
1	PEHZZ	4910011780724	25341	J-23327	CLUTCH REBUILDER,MO BOI: SEE PARA. 5.H PART OF KIT P/N 57K3218.....	
2	PEHZZ	5120014230032	33287	J-21370-10	TRANS BAND APP P GA BAND TO APPLY PIN (USED WITH J-38737)BOI:SEE PARA.5.H PART OF KIT P/N 57K3218....	
3	PEHZZ	5120014221313	33287	J-38737	TOOL,TRANS BAND PIN BOI: SEE PARA. 5.H PART OF KIT P/N 57K3218.....	
4	PEHZZ	5120014108216	33287	J-25018-A	COMPRESSOR,CLUTCH S BOI: SEE PARA. 5.H PART OF KIT P/N 57K3218.....	
5	PEHZZ	5120014221300	33287	J-38868-A	INSERTER AND REMOVE GEAR UNIT ASSY. BOI: SEE PARA. 5.H PART OF KIT P/N 57K3218.....	
6	PEHZZ	5120014221308	33287	J-37789-A	PULLER,MECHANICAL BOI: SEE PARA. 5.H PART OF KIT P/N 57K3218.....	
7	PEHZZ	5120014221326	33287	J-38655	ADAPTER,TRANS FIXTU TRANSMISSION HOLDING FIXTURE BOI: SEE PARA. 5.H PART OF KIT P/N 57K3218.....	
8	PEHZZ	5120013673536	55719	FTX40E	SCREWDRIVER ATTACHM BOI:SEE PARA.5.H PART OF KIT P/N 57K3218....	
9	PEHZZ	5120014220334	33287	J-39084	INSERTER,SEAL REAR CRANKSHAFT SEAL, BOI: SEE PARA. 5.H PART OF KIT P/N 57K3218.....	
10	PEHZZ	5120014221329	33287	J-38734	ADAPTER,TRANS CLUTC PISTON COMPRESSOR,BOI;SEE PARA.5.H PART OF KIT P/N 57K3218.....	
11	PEHHH	5180014220138	33287	J-38731	TOOL SET,TRANSMISSI BOI:SEE PARA.5.H PART OF KIT P/N 57K3218....	
12	PEHZZ	5120014220173	33287	J-38731-1	.INSERTER AND REMOVE PART OF KIT P/N 57K3218.....	
13	PEHZZ	5120014220219	33287	J-38731-2	.INSERTER AND REMOVE PART OF KIT P/N 57K3218.....	
14	PEHZZ	5120014220139	33287	J-38731-3	.INSERTER AND REMOVE PART OF KIT P/N 57K3218.....	
15	AHHHH		33287	J-38736	INSTALLATION TOOL,S BOI:SEE PARA.5.H PART OF KIT P/N 57K3218....	
16	PEHZZ	5120014221310	33287	J-38736-1	.LG SEAL RING PROTEC PART OF KIT P/N 57K3218.....	
17	PEHZZ	5120014225406	33287	J-38736-2	.PROTECTOR,S RING,SM PART OF KIT P/N 57K3218.....	
18	PEHZZ	5120014225411	33287	J-38736-3	.LRG SIZER,TRANS SEA PART OF KIT P/N 57K3218.....	
19	PEHZZ	5120014221318	33287	J-38736-4	.SM SIZER,TRANS SEAL PART OF KIT P/N 57K3218.....	
20	PEHZZ	5120014221324	33287	J-38736-5	.LRG PUSHER,TRANSMIS PART OF KIT P/N 57K3218.....	
21	PEHZZ	5120014087051	33287	J-38736-6	.INSTALLATION TOOL,S PART OF KIT P/N 57K3218.....	

END OF FIGURE

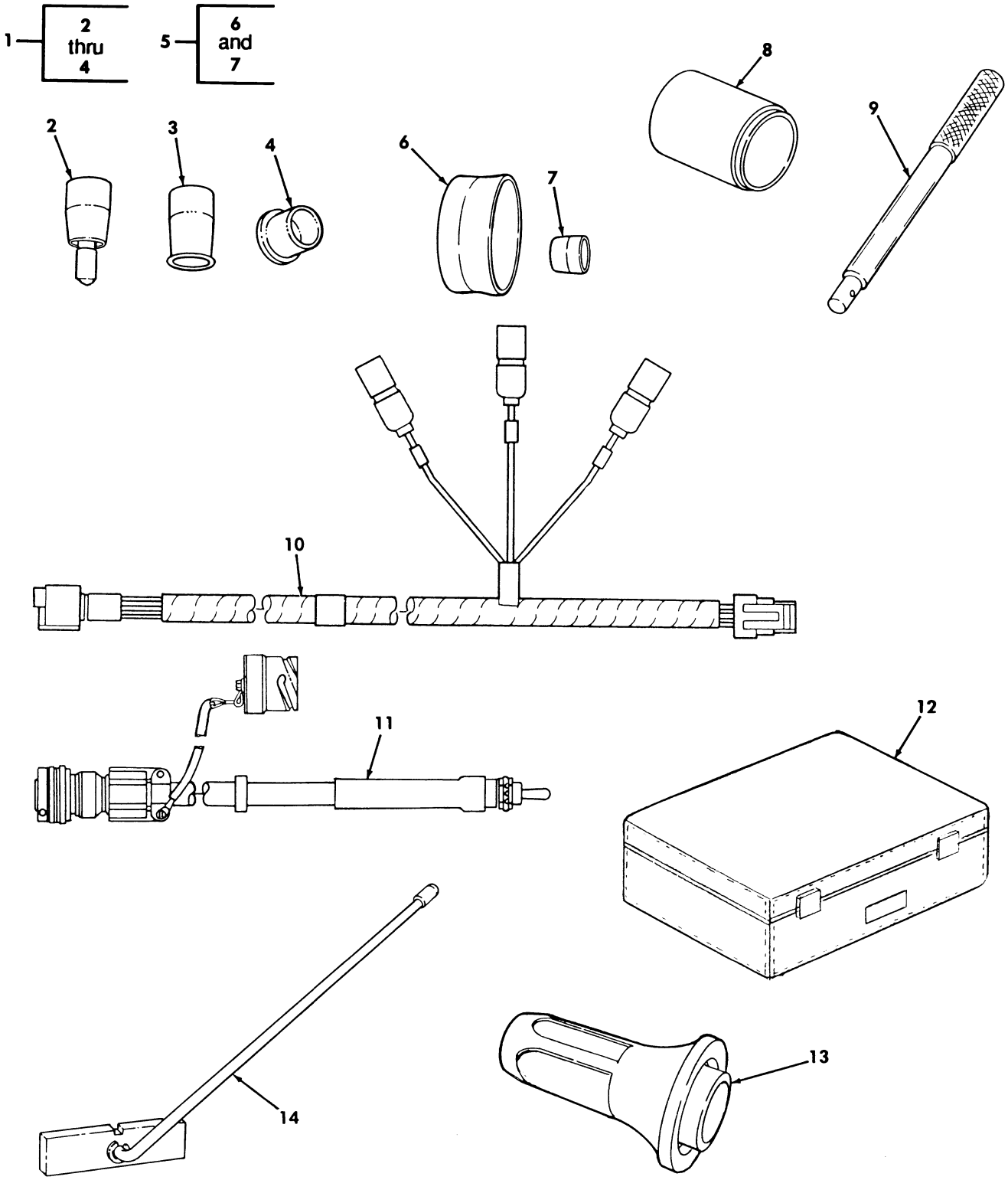

Figure 301. Special Tools, Transmission and Engine.

(1) ITEM NO	(2) SMR CODE	(3) NSN	(4) CAGEC	(5) PART NUMBER	(6) DESCRIPTION AND USABLE ON CODES(UOC)	(7) QTY
					GROUP 2604 SPECIAL TOOLS	
					FIG. 301 SPECIAL TOOLS,TRANSMISSION AND ENGINE	
1	ADHHH	5180014221294	33287	J-38739	TOOL SET,TRANS PUMP BOI:SEE PARA.5.H PART OF KIT P/N 57K3218....	
2	PEHZZ	5120014221297	33287	J-38739-1	.PROTECTOR,TRANS PUM.....	
3	PEHZZ	5120014221302	33287	J-38739-2	.INSERTER AND REMOVE.....	
4	PEHZZ	5120014221306	33287	J-38739-3	.INSERTER AND REMOVE.....	
5	PEHZZ	5120014221301	33287	J-38732	INSERTER AND REMOVE BOI: SEE PARA.5.H PART OF KIT P/N 57K3218....	
6	PEHZZ	5120014221293	33287	J-38732-1	.PROTECTOR,TRANS SEA.....	
7	PEHZZ	4910011786551	25341	J-21362	.PROTECTOR,INNER SEA.....	
8	PEOZZ	5120014370480	80604	6888	INSERTER,SEAL BOI:SEE PARA.5.H PART OF KIT P/N 57K3219.....	
9	PEOZZ	5120010261666	80604	C-4171	HANDLE,DRIVER BOI:SEE PARA.5.H PART OF KIT P/N 57K3219.....	
10	PEOZZ	6150014127774	19207	12460120	CABLE ASSEMBLY,SPEC BOI: SEE PARA.5.H PART OF KIT P/N 57K3219....	
11	PEOZZ	6150014108215	19207	12460137	CABLE ASSEMBLY-SWIT SWITCH,BOI: SEE PARA. 5.H PART OF KIT P/N 57K3219.....	
12	PEOZZ	5120014088173	19207	12460136	CASE,DIAGNOSTIC CAB BOI: SEE PARA. 5.H PART OF KIT P/N 57K3219.....	
13	PEOZZ	5120014141849	33287	J38869	INSTALLATION TOOLS,S REAR EXTENSION SEAL,BOI: SEE PARA. 5.H PART OF KIT P/N 57K3219.....	
* 14	PEOZZ	4820011794869	25341	J-33043	BLOCK,VALVE GAGE BOI: SEE PARA. 5.H PART OF KIT P/N 57K3219.....	
KIT	PEHHH	5180014087050	19207	57K3218	TOOL KIT,VEHICULAR SUPPLEMENTAL, GENERAL SUPPORT.....	
					ADAPTER,TRANS CLUTH(1) 300-10	
					ADAPTER,TRANS FIXTU(1) 300-7	
					CLUTCH REBUILDER,MO(1) 300-1	
					COMPRESSOR,CLUTCH S(1) 300-4	
					INSERTER AND REMOVE(1) 300-5	
					INSERTER AND REMOVE(1) 300-12	
					INSERTER AND REMOVE(1) 300-13	
					INSERTER AND REMOVE(1) 300-14	
					INSERTER AND REMOVE(1) 301-5	
					INSERTER,SEAL (1) 300-9	
					INSTALLATION TOOL,S(1) 300-15	
					INSTALLATION TOOL,S(1) 300-21	
					LG SEAL RING PROTEC(1) 300-16	
					LRG PUSHER,TRANSMIS(1) 300-20	
					LRG SIZER,TRANS SEA(1) 300-18	
					PROTECTOR,S RING,SM(1) 300-17	
					PULLER,MECHANICAL (1) 300-6	
					SCREWDRIVER ATTACHM(1) 300-8	
					SM SIZER,TRANS SEAL(1) 300-19	
					TOOL SET,TRANSMISSI(1) 300-11	
					TOOL SET,TRANS PUMP(1) 301-1	

(1) ITEM NO	(2) SMR CODE	(3) NSN	(4) CAGEC	(5) PART NUMBER	(6) DESCRIPTION AND USABLE ON CODES(UOC)	(7) QTY
					TOOL,TRANS BAND PIN(1) 300-3	
					TRANS BAND AP P GA (1) 300-2	
KIT	PEOOO	5180014108467	19207	57K3219	TOOL KIT,VEHICULAR SUPPLEMENTAL, UNIT.....	
					BLOCK,VALVE GAGE (1) 301-14	
					CABLE ASSEMBLY,SPEC(1) 301-10	
					CABLE ASSEMBLY-SWIT(1) 301-11	
					CASE,DIAGNOSTIC CAB(1) 301-12	
					HANDLE,DRIVER (1) 301-9	
					INSERTER,SEAL (1) 301-8	
					INSTALLATION TOOL (1) 301-13	

END OF FIGURE

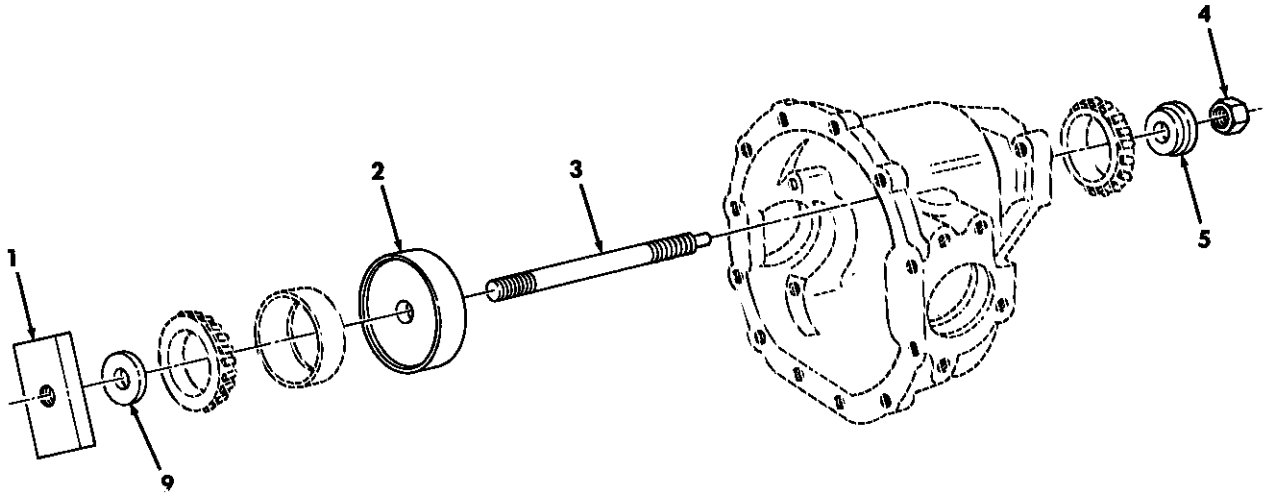

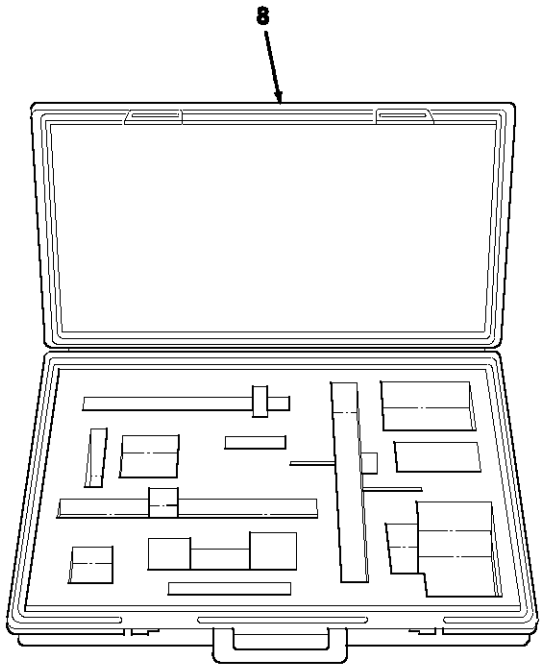

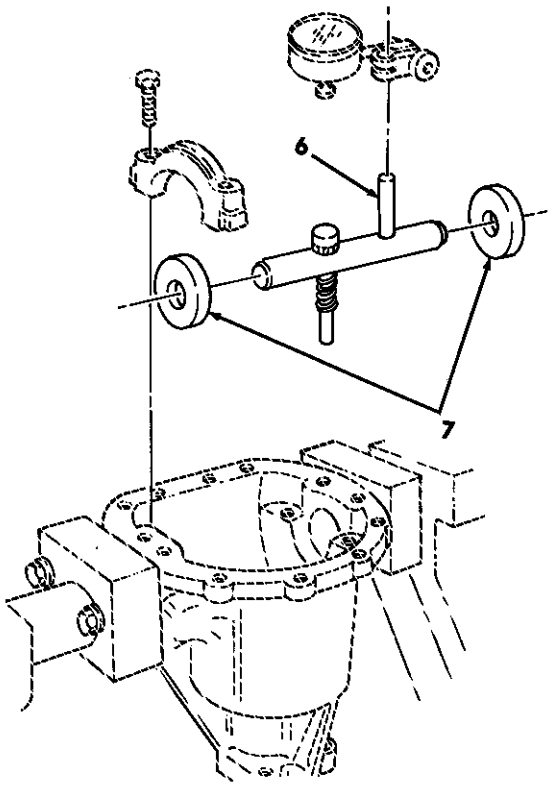

Figure 302. Pinion Setting Kit.

(1) ITEM NO	(2) SMR CODE	(3) NSN	(4) CAGEC	(5) PART NUMBER	(6) DESCRIPTION AND USABLE ON CODES(UOC)	(7) QTY
					GROUP 2604 SPECIAL TOOLS	
					FIG. 302 PINION SETTING KIT	
1	PEHZZ	5120013660893	33287	J-39524-2	BLOCK,RECTANGULAR GAUGE,BOI: SEE PARA. 5.H PART OF KIT P/N J-39524...	
2	PEHZZ	5120013662520	33287	J-39524-1	BLOCK,AXLE PINION BOI: SEE PARA. 5.H. PART OF KIT P/N J-39524.....	
3	PEHZZ	5120013669468	33287	J-21777-43	STUD ASSEMBLY BOI: SEE PARA.5.H PART OF KIT P/N J-39524.....	
4	PEHZZ	5310014654525	24617	9418753	NUT,PLAIN,HEXAGON 1/2-13,BOI: SEE PARA. 5.H PART OF KIT P/N 57K3229...	
5	PEHZZ	5120013660895	33287	J-35506-3	PILOT WASHER BOI: SEE PARA.5.H PART OF KIT P/N J-39524.....	
6	PEHZZ	5120013664713	33287	J-39524-5	AXLE PINION ARBOR BOI:SEE PARA.5.H PART OF KIT P/N J-39524.....	
7	PEHZZ	5120013666260	33287	J-35506-2	SIDE BEARING DISC,A BOI SEE PARA.5.H PART OF KIT P/N J-39524....	
8	PEHZZ	5140013660642	33287	J-39524-4	CASE,TOOL AND ACCES BOI: SEE PARA 5.H PART OF KIT P/N J-39524.....	
9	PEHZZ	5120013660894	33287	J-34175-4	PILOT WASHER BOI: SEE PARA. 5.H PART OF KIT P/N J-39524.....	
KIT	PEHHH	5180013638079	33287	J-39524	TOOL KIT,VEHICULAR PART OF KIT P/N 57K0236.....	
					AXLE PINOIN ARBOR (1) 302-6	
					BLOCK,AXLE PINION (1) 302-2	
					BLOCK,RECTANGULAR (1) 302-1	
					CASE,TOOL AND ACCES(1) 302-8	
					NUT,PLAIN,HEXAGON (1) 302-4	
					PILOT WASHER (1) 302-5	
					PILOT WASHER (1) 302-9	
					SIDE BEARING DISC,A(1) 302-7	
					STUD ASSEMBLY (1) 302-3	

END OF FIGURE

CROSS REFERENCE INDEXES
NATIONAL STOCK NUMBER

STOCK NUMBER	FIG.	ITEM	STOCK NUMBER	FIG.	ITEM
5305-00-004-3164	134	20		42B	2
5310-00-004-5033	1	4		43	6
	100A	22		44	13
	103A	9		48	3
	128A	10		133	2
	161	19		246	11
	163	36	5310-00-006-8291	212	43
	164	21	5325-00-007-3052	91	1
	169J	51		92	10
	189A	14	5310-00-011-5093	110	13
	189B	8	5310-00-011-6121	101A	7
	189C	4		249C	5
	189D	13		249D	9
	189H	4		67	6
	189J	37	5315-00-012-0123	114	12
	189N	11		134	1
	195F	9		148	9
	195G	3		149	13
	195I	5		154	12
	195K	3		225A	20
	2	5		252E	6
	201D	3	5310-00-012-0214	108	14
	201J	13		138A	3
	225A	10		138B	13
	25	47		266	15
	266N	16	5310-00-012-0367	266	11
	273A	12	5310-00-012-0388	273A	11
	28	23		42A	14
	35	27		42B	4
	38A	18	5310-00-012-0391	189G	41
	44A	18		205C	2
	45A	3		205C	12
	72	16		63	2
	100	18	5310-00-012-0393	230B	14
	129	5	5310-00-012-1743	205	27
	167T	48		205A	25
	167U	8	5315-00-012-4553	46	26
	195D	10	4730-00-012-7951	113	18
	200H	15		119	18
	202B	11	5310-00-013-1044	266O	9
	81	25		266P	7
	234	2	4730-00-014-2432	20	14
	264	5	5310-00-014-5850	158	33
	273	6		158	57
	42A	16		160	33

CROSS REFERENCE INDEXES
NATIONAL STOCK NUMBER

STOCK NUMBER	FIG.	ITEM
	161	30
	163	3
	163A	33
	164	8
	164A	11
	200E	5
	201L	7
	201O	5
	207B	46
	61	5
	81	15
	133	20
	214	15
	232	35
	233	16
	248	14
5305-00-018-7838	223A	7
	223A	10
	80	16
	223	16
	223	22
	266	8
6240-00-019-3093	57	6
	58	6
5940-00-020-0072	73	12
5310-00-020-0358	261	11
4730-00-024-3971	117E	2
	117F	7
	27	13
	31	22
	37	4
	139	2
9905-00-027-4577	237	22
2540-00-040-2129	207	14
4730-00-041-2526	39	19
	39A	22
5306-00-042-5570	79	15
	80	20
5310-00-043-2646	50	58
5305-00-043-2682	201B	22
5310-00-044-3340	47	6
5310-00-044-3342	101	9
	101A	10
	141	14
	141A	20
4730-00-044-4655	3	10
4730-00-044-4689	87	18
5310-00-044-6363	164A	17
6240-00-044-6914	57	7
	58	7
	60	3
5310-00-045-3296	189G	40
	204A	12
	205C	11
	228	41
	249B	11
	266	3
	266J	8
	266K	7
	266M	4
	274B	5
	70A	9
5310-00-045-3299	169	28
	249B	4
	51	14
	51A	17
	53	2
5310-00-045-4007	200G	8
	233	30
5310-00-045-5207	66	32
5310-00-045-5218	67	5
4730-00-045-9769	113	39
	119	39
1005-00-049-9324	KITS	21
2640-00-050-1229	131	9
	131A	10
5306-00-050-1237	196G	37
5306-00-050-1238	168	6
5340-00-050-2740	79	19
	80	11
	81	6
	237	17
4730-00-050-4203	108	9
	108	17
	109	3
	114	9
	114	18
	120	9
	120	18
	134	4

CROSS REFERENCE INDEXES
NATIONAL STOCK NUMBER

STOCK NUMBER	FIG.	ITEM
	134	7
4730-00-050-4205	134	11
	134	17
	154	7
4730-00-050-4207	150	23
5940-00-050-7106	73	11
5340-00-050-9077	112	27
	118	8
	159	7
	44A	24
	99	7
5305-00-050-9215	167T	47
	169J	45
5305-00-050-9228	274A	8
5305-00-050-9233	167B	16
5305-00-051-4075	158	5
5305-00-051-4076	168	16
5306-00-051-4077	208A	6
5305-00-051-8605	12	25
	112	11
	118	9
	127	4
5305-00-052-2232	158	18
	207A	14
5305-00-052-6456	44	16
5305-00-052-6921	38	2
5305-00-052-8881	252H	4
5340-00-053-8994	72	18
5340-00-057-2904	72	14
	74	10
	79	38
	80	18
	80	19
	81	16
	237	19
5340-00-057-2906	200G	5
	237	15
	263	4
5340-00-057-3025	264	10
5340-00-057-3043	81	20
	126	25
	127	11
5310-00-058-1305	189E	15
	189J	23
	189N	15
	189O	21
	202A	3
	202B	2
5315-00-058-9808	181	10
5305-00-059-3659	227D	6
	247	3
5310-00-061-4650	138A	23
	196C	20
	196G	11
	249E	2
	27	19
	29	11
	30	4
	33	1
	51	26
	68	10
	79	29
	79	31
	84	7
	112	17
	118	16
	121	3
	133	27
	139	16
	140	20
	158	22
	160	28
	161	9
	162	22
	164	1
	164A	1
	166B	13
	167G	14
	167H	7
	167T	28
	167U	19
	169J	25
	200F	7
	201	3
	202B	15
	202D	12
	203	4
	204A	27
	204B	28
	205	12

CROSS REFERENCE INDEXES
NATIONAL STOCK NUMBER

STOCK NUMBER	FIG.	ITEM
	206	1
	207A	1
	226	21
	232	1
	233	40
	235	6
	235A	5
	249	31
	249A	25
	249D	2
	249E	11
	250	19
	252D	3
	266I	13
	266K	3
	266L	20
	266M	9
	266O	5
	40A	9
5310-00-061-4651	149	16
	153	15
	155A	6
	252A	1
4720-00-065-8682	BULK	71
5340-00-067-3868	107	2
	112	24
	264	11
5305-00-068-0501	30	10
5305-00-068-0502	33	5
	56	16
	67	8
	123	2
	164	5
	165	14
	201	7
	205	10
	223	23
	235	17
	235A	16
	237	25
	251	13
	255	9
5305-00-068-0508	100	13
	100A	8
	112	14
	117H	12
	164A	5
	167G	16
	196G	7
	200E	20
	200F	11
	200H	37
	201G	1
	202D	8
	204B	30
	29	14
	31	17
	35	11
	37	9
	40	6
	49	6
	65	1
	72	12
	161	11
	162	12
	165	2
	182	1
	205	31
	205A	29
	206	21
	207	15
	207A	37
	225	2
	228	47
	228A	46
	232	29
	233	10
	237A	7
	250	7
	252	14
	284	2
	40A	7
	70A	6
5305-00-068-0509	12	29
	180	2
	181	5
	186	8
	189G	5
	189J	35
	204A	33

CROSS REFERENCE INDEXES
NATIONAL STOCK NUMBER

STOCK NUMBER	FIG.	ITEM
	207A	10
	213A	25
	25	58
	157	7
	223	2
	227D	11
	266	9
	266I	15
	287B	2
5305-00-068-0510	103A	6
	128A	9
	196G	5
	2	6
	200H	2
	201C	20
	201M	1
	265B	17
	265C	2
	265D	19
	266B	6
	266C	3
	35	28
	36	9
	45	13
	113	15
	119	15
	137	6
	167I	22
	189A	22
	189C	6
	189I	27
	196C	24
	196D	47
	200	14
	225A	9
	45A	4
5305-00-068-0511	161	18
	173	9
	174	1
	175	4
	176	1
	182	19
	189A	24
	189C	5
	189D	4
	189F	4
	189J	20
	189K	5
	189L	4
	189L	15
	189O	18
	2	2
	110	14
	146	9
	147	7
	167F	9
	167G	17
	190	2
	191	2
	200H	17
	201G	17
	201I	7
	202A	8
	202B	10
	208A	21
	225A	11
	265D	8
	266N	15
	35	6
	208	19
	44A	27
5306-00-068-0513	56	11
	65	6
5310-00-068-5285	101	10
	101A	11
	130	4
	141	9
	141A	19
5305-00-068-7837	12	11
	138A	18
	167H	12
	167H	19
	167T	10
	169J	10
	38	6
	51	27
	123	11
	139	13
	140	5
	156	23

CROSS REFERENCE INDEXES
NATIONAL STOCK NUMBER

STOCK NUMBER	FIG.	ITEM	STOCK NUMBER	FIG.	ITEM
	158	42		143A	23
	170A	22		2	14
	180	13		144	11
	196C	1	5305-00-071-2068	116A	7
	198	26	5305-00-071-2069	111	5
	203	3		113	40
	220A	6		113A	3
	51A	24		116	5
5305-00-069-5578	25	40		116A	6
5305-00-071-1313	247	4		143	20
5305-00-071-1315	226	16		144	3
	227C	15		144A	18
	227C	27		226A	8
	249	25		246	27
5305-00-071-1327	226	10		253	7
	227C	8		256	6
	227C	20		265B	3
5305-00-071-1783	141	7	5305-00-071-2070	101	6
	141A	14		101A	8
	145	5		125A	16
	145	11		142	20
	256	19		148	14
5305-00-071-1785	253	19		200H	10
5305-00-071-1786	108	5		253	6
	119	42		261	6
	153	10	5305-00-071-2071	201K	6
	201C	17		207A	12
5305-00-071-1788	125A	8		265D	4
	125B	12		36	14
	162	6	5305-00-071-2073	150	5
	201L	34	5305-00-071-2074	42	1
	256	12		143	17
5305-00-071-1789	256	9		143A	21
5305-00-071-2055	114	15		144	1
5305-00-071-2056	134	14		144A	2
5305-00-071-2057	201L	40		273	1
	207A	16		38A	20
	207B	35	5305-00-071-2075	143	15
5305-00-071-2061	253	18		143A	9
5305-00-071-2066	233	25		144	19
5305-00-071-2067	111	11		144A	21
	113	16		149	1
	119	16		150	5
	141	18		42A	1
	143	16	5305-00-071-2076	116	9

CROSS REFERENCE INDEXES
NATIONAL STOCK NUMBER

STOCK NUMBER	FIG.	ITEM
	143	21
	143A	8
	144A	15
	226A	7
5305-00-071-2077	142	19
	143	8
	143A	16
	149	6
	150A	1
	257	10
5305-00-071-2078	142	12
	142A	13
	143	19
5305-00-071-2079	142	12
	142	19
	142A	24
	143A	6
	145	5
	150A	17
5305-00-071-2081	141	15
	141A	8
	150A	21
	2	11
	145	11
5305-00-071-2082	141	2
5305-00-071-2083	246	16
5305-00-071-2236	208	24
	208A	26
5305-00-071-2505	123A	2
	126A	8
	160	17
	166A	54
	166B	32
	167B	54
	167H	13
	167H	20
	167I	21
	167T	29
	167T	34
	169J	26
	169J	32
	170	19
	181	18
	182	12
	200F	18
	200G	11
	200H	7
	201K	33
	201M	5
	201N	2
	207A	6
	207B	14
	209B	8
	38A	8
	83	2
	84	14
5305-00-071-2506	12A	6
	167I	9
	167P	8
	223A	13
	249	33
5305-00-071-2507	25	1
5305-00-071-2508	201G	28
5305-00-071-2509	167U	24
	189E	17
	201G	8
	201K	27
	25	48
	212	40
	266I	14
	276G	9
	288A	3
	33	31
	54	4
	264	4
5305-00-071-2510	117B	7
	201M	12
	235	16
	235A	15
5305-00-071-2511	117F	6
	188	14
	189	8
	208	38
	225K	10
5305-00-071-2512	189O	19
5305-00-071-2513	116A	13
	167G	2
	188J	1
	188K	5
	208	28

CROSS REFERENCE INDEXES
NATIONAL STOCK NUMBER

STOCK NUMBER	FIG.	ITEM	STOCK NUMBER	FIG.	ITEM
	209B	9		266J	3
5305-00-071-2514	167C	5		266J	19
5305-00-071-2517	188J	6		266K	2
	188K	7		266L	2
5975-00-074-2072	25	5		266N	17
	84	10		35	7
5325-00-074-3301	BULK	4		39	7
2540-00-078-6633	150	7		39A	12
	150	15		44A	19
5340-00-079-7837	250	2		9	10
	252	9		45	14
	267A	2		58	2
	33	17		72	6
5310-00-080-2411	266	13		87	9
5310-00-080-6004	2	3		208	26
	102	23	5310-00-080-9786	79	36
	113	14		236	6
	119	14		237	10
	123	18	5310-00-081-4219	14	2
	128	6		126	24
	137	9		127	13
	146	1		146	4
	147	4		147	2
	161	20		157	18
	162	19		158	2
	163	10		158	8
	163A	11		163	7
	166A	25		163A	7
	167B	25		164	14
	167R	2		166A	46
	196B	2		167B	46
	196C	11		167H	29
	196D	2		167I	16
	201C	13		189E	13
	207A	35		196B	8
	208A	29		196D	33
	230	17		202B	22
	230A	17		204B	16
	230B	5		210A	14
	25	51		212	30
	265B	14		217	5
	265C	7		227D	19
	265D	3		227D	31
	265E	3		230	1
	266H	7		230	10

CROSS REFERENCE INDEXES
NATIONAL STOCK NUMBER

STOCK NUMBER	FIG.	ITEM	STOCK NUMBER	FIG.	ITEM
	233	24		123	1
	246	15		139	15
	249B	23		140	22
	249F	6	5340-00-088-1255	264	7
	265F	2	5325-00-088-6147	59	10
	266J	24	5340-00-088-6655	266M	13
	266L	5		81	28
	266N	14	5305-00-088-8332	248	2
	44A	14	5365-00-090-5426	76	12
	70	2		77	2
	81	19	5340-00-091-3790	74	5
	113	37		79	8
	119	37		80	10
	122	8	3110-00-100-5920	113	29
	230A	1		119	29
	230A	10	4910-00-105-2823	296	6
	230B	21	5940-00-107-1481	71	7
5305-00-081-6729	189Q	5	3110-00-108-9247	260	53
5305-00-081-6730	207B	4	5975-00-111-3208	255	7
5315-00-081-7021	201K	18	5940-00-113-9420	264	13
5320-00-083-5009	165	6	5940-00-113-9826	78	11
	166	12	5940-00-114-1315	71	12
	206	18	5935-00-115-2306	75	3
	207A	21	5935-00-115-2307	75	5
	227	8	5940-00-115-2685	49	5
	227D	9	5940-00-115-5006	49	2
	232	11		66	14
	238	13		66	20
	239	2		66	25
	247	7	5305-00-115-9934	117D	5
5310-00-087-7493	202D	7		163	28
	57	2		163A	29
	121	10		200F	13
	163	26	5320-00-117-6853	156	8
	164	16		158	52
	207A	29	5340-00-119-4708	232	37
5310-00-088-1251	56	15	5310-00-124-9265	72	3
	133	13		74	11
5340-00-088-1254	100A	24		79	6
	117G	9		80	14
	117H	6		133	34
	138A	19		139	20
	79	21		166	5
	80	26		213	12
	81	9		214	10

CROSS REFERENCE INDEXES
NATIONAL STOCK NUMBER

STOCK NUMBER	FIG.	ITEM	STOCK NUMBER	FIG.	ITEM
	215	19		201L	10
	222	4	5310-00-167-0836	201B	17
	224	10		201L	18
	226A	12	5310-00-167-0837	201B	10
	227A	7		201L	5
	227D	21	5935-00-167-7775	71	8
	228	43		76	2
	228A	42		77	5
	31	15		78	9
	237	21	5310-00-168-6412	279	2
	252	10	5331-00-171-6649	128	5
	264	18		128A	7
	265	14	4730-00-172-0010	133	17
	267	12	2520-00-172-1947	91	4
4730-00-125-7979	29	7	5325-00-174-9332	75	7
5310-00-126-3842	133	8		161	25
3040-00-127-5322	150	21	5325-00-174-9336	264	9
5930-00-130-5349	51	18	5325-00-174-9829	108	10
	51A	21		108	21
1640-00-132-9181	196C	7		109	6
5930-00-134-5036	51	12	5305-00-175-3230	189P	11
	51	17	5310-00-176-6611	204A	40
	51A	15	5340-00-177-3711	249B	14
	51A	20	6220-00-179-4325	57	9
5330-00-135-6383	88	21	5310-00-180-0277	236	12
5331-00-137-3450	50	9	5306-00-180-2748	227D	32
5330-00-138-0251	50	41	5305-00-180-4966	236	15
5120-00-142-5152	290	2	5306-00-182-2025	158	6
5940-00-143-4794	69	6		158	45
2910-00-148-6555	23	24	5306-00-182-2027	157	23
5315-00-150-2793	196C	3		158	44
4730-00-150-6118	21	8		227	12
5340-00-151-9651	72	20		247	11
6145-00-152-6499	BULK	61	5935-00-184-6707	71	10
3110-00-155-6152	117	12		76	14
2805-00-155-7263	7	7	5120-00-184-8398	299	1
2805-00-155-7266	7	6	5310-00-184-8971	66	29
6240-00-155-8714	54	2	4730-00-187-4202	3	15
5975-00-156-3253	267	11	5305-00-187-9934	225H	2
5310-00-164-1790	237	8		252F	2
5310-00-166-8567	136	18	5310-00-190-0752	22	8
5310-00-167-0821	85	2	5305-00-191-3640	117B	5
5310-00-167-0823	158	21		117G	17
5310-00-167-0834	201B	26		12	22
5310-00-167-0835	201B	2		255	10

CROSS REFERENCE INDEXES
NATIONAL STOCK NUMBER

STOCK NUMBER	FIG.	ITEM
5330-00-193-0850	50	32
5310-00-194-1483	150A	19
	51	16
	51A	19
	51A	25
9905-00-198-2728	238	2
5365-00-200-7229	50	11
5325-00-202-4005	75	8
4730-00-202-8967	228A	25
4730-00-204-3491	40	1
	139	6
5305-00-204-4850	228	17
	228A	17
5310-00-205-9078	290	8
5305-00-206-2508	66	30
5305-00-207-3984	24	34
5310-00-208-1918	160	32
	161	28
	164	12
	201B	27
5306-00-208-3639	201B	11
	201L	20
5310-00-209-0786	142	8
5310-00-209-0965	201C	16
	45	7
	119	41
	135	3
	221A	4
	263	2
5935-00-214-0904	46	7
	75	10
4730-00-221-2140	246	12
5970-00-221-5301	66	21
	66	26
	255	17
5331-00-222-1709	117A	3
2520-00-224-7463	136	2
5305-00-225-3841	189J	21
	189N	14
5305-00-225-3842	12A	24
	140	23
	160	16
	161	5
	201K	47
	207B	13
	266N	21
5305-00-225-3843	121	5
	133	11
	139	21
	142	15
	160	10
	161	1
	162	24
	167G	19
	167I	14
	167K	2
	167U	28
	170A	11
	171	8
	179	11
	182	9
	183	14
	183	22
	184	2
	185	6
	186	3
	188	17
	189	5
	189B	28
	192	3
	193	1
	196D	23
	200	7
	201N	3
	202	14
	202A	5
	204B	7
	205B	4
	206	13
	208	22
	208A	24
	209	13
	209C	1
	210B	2
	211	1
	213	24
	213A	3
	219	7
	223	9
	223A	1

CROSS REFERENCE INDEXES
NATIONAL STOCK NUMBER

STOCK NUMBER	FIG.	ITEM
	225K	5
	234	3
	235	2
	235A	3
	236	16
	237	30
	237A	3
	252D	7
	33	18
	65	14
	118	13
	275	12
	283	11
	284	13
5310-00-225-5328	74	2
5306-00-225-8499	112	25
	122	11
	163	25
	163A	26
	164	18
	204	4
	230	15
	230A	15
	236	3
	237	6
5306-00-225-8503	230	12
	230A	12
5306-00-225-9089	166A	45
	167B	45
5306-00-226-4823	113	36
	119	36
5306-00-226-4824	117	23
	167T	2
	169J	4
	196B	18
	265A	9
	267	21
5306-00-226-4825	126	10
	126A	30
	167H	17
	167V	7
	169J	29
	31	21
	220	6
	249E	6
	266	16
	44A	12
5306-00-226-4826	167C	15
	167H	27
	167V	4
	189E	14
	196B	7
	196D	7
	215	9
	217A	7
5306-00-226-4827	123A	14
	142A	6
	164A	18
	201L	28
	207B	10
	210	4
	210A	13
	212	29
	217	3
	217A	3
	230	3
	230A	3
	230B	19
	249F	7
	266J	22
	266L	3
	266N	12
	266O	1
	70	1
5306-00-226-4828	126	23
	126A	34
	127	14
	138C	1
	189M	12
	208	4
	212	2
	227D	29
	227D	34
	246	23
	248	22
	262	1
5306-00-226-4829	14	1
	167C	6
	167F	16
	167H	34

CROSS REFERENCE INDEXES
NATIONAL STOCK NUMBER

STOCK NUMBER	FIG.	ITEM	STOCK NUMBER	FIG.	ITEM
	169C	1	5305-00-226-7237	25	32
	189N	7	5305-00-227-1543	233	32
	201O	7	5315-00-234-1861	204	9
	202B	21	5315-00-239-8032	148	1
	202D	5		149	17
	202E	1	5305-00-240-0194	133	22
	210A	8		163A	5
	212	26		164A	7
	249B	21		210A	28
5305-00-226-4831	167	18		212	49
	167G	12		228A	29
	195D	13		232	34
	204B	12		274B	6
	205A	16		79	9
	230A	21		156	26
	265F	4		158	59
	36	5		163	4
	179	3		164	7
	189E	8	5305-00-240-6541	201J	5
	205	19	5305-00-240-6668	204A	13
	210	5		228A	47
5306-00-226-4832	169H	3		79	1
	230B	13	5120-00-240-8702	299	4
	266P	2	5310-00-241-6604	79	25
5306-00-226-4833	162	17	5310-00-241-6658	122	6
	195F	12		157	17
5306-00-226-4834	195D	15		158	1
	195E	6		166A	47
	201L	42		167B	47
5306-00-226-4836	167Q	12		167C	8
	167T	12		196B	16
	169J	12		196D	35
5306-00-226-4837	167O	1		196G	40
	169D	1		200	27
	169F	5		227	11
5306-00-226-4838	146	3		227D	30
	167H	23		247	8
	167U	6	5310-00-241-6659	154	9
	189E	11	5310-00-241-6921	59	7
	195E	4	5315-00-243-1169	150	19
5306-00-226-4839	167P	4	4020-00-246-0688	BULK	2
5306-00-226-4842	202E	5	3120-00-251-4172	196G	27
5306-00-226-4843	169D	11	5310-00-251-4503	223	14
5306-00-226-4845	169H	17		223	19
5930-00-226-6429	51	6		223A	4

CROSS REFERENCE INDEXES
NATIONAL STOCK NUMBER

STOCK NUMBER	FIG.	ITEM	STOCK NUMBER	FIG.	ITEM
	223A	12		188K	9
	224	7		198	4
	236	7		200C	15
	288A	7		201D	5
	61	4	5305-00-269-3249	188G	6
	63	4		188K	6
5305-00-253-5626	150	16		188O	9
5305-00-253-5627	243	8	5310-00-269-3466	212	13
5315-00-255-5580	204	6	5305-00-269-4528	201J	14
3120-00-255-5697	92	12	5305-00-269-4530	200D	12
5310-00-261-8278	66	31	5325-00-276-6228	233	34
5325-00-263-6651	74	13		268	4
5305-00-267-8953	201B	1	5325-00-276-6343	81	22
	201L	4	5365-00-277-7341	113	5
6680-00-269-0335	267	20		119	5
5305-00-269-3217	235	11	4730-00-278-2523	275	15
5305-00-269-3233	201C	14	4730-00-278-3721	140	18
	246	10	5325-00-281-8642	226	3
5305-00-269-3234	198	12	5325-00-282-1830	163	23
	200C	2		163A	24
	74	6	5340-00-282-7517	228A	27
	200	16	5940-00-283-5280	249A	20
5305-00-269-3236	189I	15	5310-00-285-7037	205	26
	189J	13		205A	24
	189K	10	4730-00-287-1706	126	33
	199	5		126A	25
	200C	6	4730-00-289-1254	62	7
5305-00-269-3238	189A	15	5325-00-291-9366	233	35
	189B	15	5306-00-292-8253	196D	37
	189C	10		200	23
	189D	11	5330-00-297-6329	52	14
5305-00-269-3239	200A	8	5310-00-298-8903	249B	18
5305-00-269-3240	200B	7	6220-00-299-7425	61	2
	200C	12	6220-00-299-7426	61	2
	200E	25	2920-00-302-6342	KITS	92
	200F	23	5930-00-307-8856	51	20
	201J	16		51A	23
5305-00-269-3241	201D	2	5925-00-333-1584	274B	3
5305-00-269-3243	200A	1	5935-00-333-9414	76	7
	265B	18	5360-00-335-9327	22	27
5305-00-269-3247	197A	24	2805-00-336-1716	11	15
	198A	1	2530-00-340-1405	124	9
	200D	9		125	5
	265D	13	5310-00-350-2655	60	6
5305-00-269-3248	188J	7	2520-00-352-2168	133	29

CROSS REFERENCE INDEXES
NATIONAL STOCK NUMBER

STOCK NUMBER	FIG.	ITEM
5330-00-353-0959	61	3
5305-00-353-0969	59	5
5310-00-355-5645	48	7
5340-00-366-0618	89	10
4730-00-366-3011	140	15
5305-00-366-3337	43	4
5325-00-371-8108	226	2
	226	6
	227B	3
	249	2
	249	7
5305-00-390-0524	80	2
3120-00-393-4067	24	18
5310-00-393-6685	76	13
	77	3
5940-00-399-6676	249A	16
	249B	17
	71	4
4720-00-401-9299	BULK	66
5310-00-402-2778	100A	20
	166B	17
	167T	57
	200E	9
	200F	16
	228A	28
	288A	8
	55	5
3110-00-403-1488	136	21
3110-00-406-9608	117	17
5310-00-407-9566	167C	16
	167G	11
	167H	28
	167T	3
	167T	13
	167U	14
	167V	3
	169J	3
	169J	13
	189E	7
	189M	13
	189N	6
	195D	14
	195E	3
	195E	7
	195F	13
	201L	29
	201O	8
	202D	6
	204	5
	205	14
	205A	11
	207B	9
	208A	5
	210A	15
	212	31
	215	10
	217A	8
	217B	5
	230	2
	230	11
	230A	2
	230A	11
	230B	15
	266J	23
	266L	4
	266M	16
	266N	13
	266P	3
	31	20
	35	15
	246	14
	247	9
	249B	22
	249E	8
	44A	13
	70	10
5340-00-408-2432	150	22
5310-00-409-3333	114	3
	141A	28
	142	26
	142A	20
	143	2
	144	4
	144A	5
	150A	8
	154	12
	207A	33
	225A	22
	253	23
5310-00-409-3355	138A	2

CROSS REFERENCE INDEXES
NATIONAL STOCK NUMBER

STOCK NUMBER	FIG.	ITEM
5330-00-409-5291	267	19
3110-00-411-5937	113	3
	119	3
5305-00-411-9287	214	14
5310-00-419-0876	46	25
3120-00-425-6467	50	4
5305-00-432-4165	54	13
5305-00-432-4203	249G	9
5305-00-432-4204	158	36
5305-00-432-4205	165	9
	166A	34
	167B	34
	167E	17
5305-00-432-7954	81	14
5340-00-438-1833	255	4
5325-00-442-5845	123	7
	123A	22
	166A	42
	167B	42
5305-00-442-7347	46	30
6220-00-443-0589	59	8
4730-00-444-8489	13	9
5310-00-447-3196	266G	4
5310-00-447-8774	87	2
	101	1
	101A	1
5310-00-449-2376	131	13
	131A	14
	150	14
5325-00-449-3001	165	5
5340-00-449-6408	3	16
3120-00-450-1905	50	18
5331-00-451-0118	102	26
5975-00-451-5001	12	21
	72	19
5331-00-451-9005	252F	3
2590-00-454-3620	236	18
	237	28
	237A	5
5310-00-458-2382	261	9
4730-00-459-6077	23	32
5331-00-462-0907	58	11
5935-00-462-6603	76	9
	77	11
	78	13
5331-00-463-0200	57	10
5310-00-463-0268	59	12
5305-00-470-3321	163	1
	164	10
	201H	4
	204B	6
	267A	8
	70	11
5310-00-471-9243	104	2
5310-00-472-3214	266E	2
5305-00-478-0273	69	2
5305-00-482-6825	166A	7
	223A	20
5310-00-482-9493	42	6
	101	5
5310-00-483-8791	227D	18
3120-00-485-1017	130	8
5310-00-488-3888	153	2
5310-00-488-3889	116	1
	116A	8
	116A	14
	125A	14
	134	22
	141	6
	142A	12
	145	2
	149	5
	150	1
	150A	23
	207A	23
	252A	6
	256	2
	257	12
	263	1
	265B	1
	265D	10
	266A	1
	266B	9
5305-00-489-0743	72	22
	72	29
	79	22
	79	39
	80	23
5340-00-489-5684	204	40
	205A	8

CROSS REFERENCE INDEXES
NATIONAL STOCK NUMBER

STOCK NUMBER	FIG.	ITEM	STOCK NUMBER	FIG.	ITEM
	207A	43		42A	17
5320-00-490-2243	226A	1		42B	12
4720-00-491-0102	BULK	19		44A	25
4730-00-491-9576	117F	3	5305-00-543-4372	25	52
	44A	10		57	1
5340-00-492-2313	165	11		58	1
	165	22		72	15
2910-00-493-2138	19	3		173	10
5330-00-493-3876	KITS	83		176	9
5305-00-499-7694	55	12		192	2
4910-00-506-0037	289	2		195J	10
6105-00-512-9225	233	14		200C	10
5305-00-514-0237	266D	11		200F	20
5325-00-514-1299	113	21		201	16
	119	21		232	4
5310-00-515-8776	263	14		44A	17
5325-00-515-9685	81	10	5940-00-549-6581	66	15
5120-00-516-4979	290	16	5940-00-549-6583	66	18
5940-00-520-2447	255	18	5310-00-550-1130	287A	10
2540-00-525-7067	150	13		65	7
5310-00-543-2410	207A	13		162	13
5305-00-543-2419	1	6		205	30
	189M	10		205A	28
	202B	1		228	16
	230	5		228A	16
	230A	5		235	7
	230B	4		235A	7
	230B	20	4720-00-555-8015	BULK	13
	250	13	5310-00-559-0070	22	6
	266B	1	5331-00-561-0273	225I	5
	38A	17		225I	16
5305-00-543-2866	167T	49	5340-00-565-5378	196B	12
	167U	17	5975-00-570-9598	30	13
	169J	44	5315-00-576-0265	102	38
	183	27		105	18
	195D	12	5310-00-576-5752	233	18
	195F	6	4730-00-577-8017	117E	6
	195H	9	5331-00-579-6861	225H	3
	195J	4	5331-00-580-6586	138A	27
	195J	8		139	7
	195K	7		140	8
	196B	5		225D	3
	196C	23		252D	8
	196G	51		252F	6
	273A	13	5310-00-582-5765	22	4

CROSS REFERENCE INDEXES
NATIONAL STOCK NUMBER

STOCK NUMBER	FIG.	ITEM	STOCK NUMBER	FIG.	ITEM
5310-00-582-5965	123	12		163	18
	126A	9		70A	5
	163A	19	5305-00-582-9501	228A	44
	167G	15		72	1
	167H	14		79	14
	167I	7		80	12
	167T	11		139	17
	167T	35		214	12
	167U	29		228	45
	169J	11		267	6
	169J	33	5331-00-584-0265	225J	6
	170A	23	5310-00-584-5272	116A	5
	189B	27		167F	3
	189E	16		167U	22
	189J	22		170A	17
	189N	13		196D	39
	189O	20		201K	7
	200F	12		66	2
	201G	2		87	17
	201I	2		207	16
	201M	13		207	28
	202A	4		246	19
	202B	17		265D	5
	204A	10		42A	2
	205B	5	4010-00-585-2108	BULK	1
	209	12	4730-00-585-2653	133	25
	209C	2	5331-00-585-6663	33	8
	210	3	5310-00-595-6057	267	14
	213A	26	5310-00-595-7486	148	11
	226A	11		149	11
	228	37	5120-00-596-8508	290	14
	228A	37	5315-00-597-3693	201	9
	255	2	5325-00-598-1428	24	20
	266M	11	5935-00-605-9322	76	17
	266N	20	5305-00-614-3423	51	13
	266O	4		51A	16
	276G	8	5935-00-614-3959	76	4
	287B	3	5315-00-616-5514	138B	7
	288A	4	6685-00-618-1822	246	28
	35	12	4730-00-618-5381	117E	3
	38	5	5120-00-618-6902	298	14
	38A	15	5305-00-630-3103	196G	29
	54	5	5310-00-637-9541	12	26
	56	10		137	8
	65	3		167C	11

CROSS REFERENCE INDEXES
NATIONAL STOCK NUMBER

STOCK NUMBER	FIG.	ITEM	STOCK NUMBER	FIG.	ITEM
	167F	8		46	8
	167G	7	5120-00-677-2259	294	1
	189F	3	5342-00-678-1753	126	31
	189G	8		127	18
	189I	14	5940-00-682-2445	249B	15
	189J	14	2590-00-683-0598	65	5
	189K	6	5930-00-683-1628	249C	9
	189L	14	5120-00-683-8597	299	5
	189M	9	4720-00-684-4033	BULK	7
	189O	5	5310-00-685-3228	228	13
	189P	18		228A	13
	195E	12	5935-00-686-2599	76	10
	195F	18	5305-00-688-2111	189O	4
	195H	6		189P	10
	195J	3		189Q	1
	195J	11		201F	1
	200B	8		202D	4
	200C	3		87	12
	200D	10		254	7
	202A	9		261	7
	249C	2	5305-00-689-7472	117	25
	266J	4	5340-00-689-9514	79	3
	266J	20		81	13
	266L	12		267	7
	45	12	5935-00-691-5591	249A	21
	67	9	2590-00-695-9076	249B	19
5305-00-638-8920	167H	30	5310-00-696-5172	213A	13
	189G	29		51	24
	189I	17	5975-00-697-7769	76	18
	189J	11	5340-00-702-2848	200G	3
	189O	15	5360-00-704-4253	150	20
	195F	8	6145-00-705-6674	BULK	42
	195G	4	6145-00-705-6678	249B	2
	235A	12		249B	20
	35	17	5940-00-705-6702	78	12
	162	25	5940-00-705-6703	71	15
	177	6		77	13
	183	27	5940-00-705-6708	71	13
4730-00-639-9730	107	4		76	15
5331-00-641-8283	24	13		77	7
5310-00-655-9370	261	18	5940-00-705-6709	71	6
5305-00-655-9711	69	12		76	21
5310-00-655-9860	76	5	5940-00-705-6711	77	4
5310-00-656-0067	249A	22	5940-00-705-6715	71	14
5975-00-660-5962	249A	18	5305-00-709-8282	220A	11

CROSS REFERENCE INDEXES
NATIONAL STOCK NUMBER

STOCK NUMBER	FIG.	ITEM
	221B	11
	221C	16
5305-00-709-8283	220	14
5305-00-709-8515	221C	2
5305-00-709-8517	220A	10
	221C	6
5305-00-709-8542	220A	14
	221B	9
5305-00-716-7680	141	12
	141A	22
5305-00-719-5240	150	12
5325-00-720-8064	200H	21
5305-00-721-5492	167R	1
	201C	6
	205	35
	265A	1
5310-00-721-7809	100A	26
	250	3
5320-00-721-9062	156	15
	158	46
5305-00-724-5812	233	21
5340-00-724-7038	249B	13
	80	21
5305-00-724-7219	111	8
	116	8
	124A	5
	125A	19
	254	3
5305-00-724-7220	111	10
	116	11
	116A	17
	124	21
	125	14
	125A	17
	125B	13
5305-00-724-7222	152	7
5305-00-724-7225	201G	11
5305-00-724-7228	153	11
5305-00-724-7236	141A	17
5305-00-724-7254	148	6
	155	16
	252A	7
5305-00-724-7263	155	8
5305-00-724-7264	149	22
	155A	1
5305-00-724-7265	155	8
	155	14
	155A	1
5305-00-724-7266	155	14
5305-00-725-2317	163	16
	163A	17
	166B	28
	167T	46
	167U	1
	173	17
	174	7
	175	13
	176	14
	183	12
	189A	12
	189B	11
	189C	7
	189D	14
	189F	4
	189G	10
	189H	5
	189I	24
	189J	18
	189O	2
	190	6
	195G	8
	196B	3
	196G	53
	199	1
	207A	34
	207B	21
	28	20
	206	14
	254	12
	257	9
	265D	1
	265E	2
	266B	21
	266L	11
	42A	20
5340-00-725-5280	103A	7
	249C	4
	30	12
	99A	3
5305-00-726-2567	12A	23

CROSS REFERENCE INDEXES
NATIONAL STOCK NUMBER

STOCK NUMBER	FIG.	ITEM
	135A	4
5340-00-731-9611	225C	2
5305-00-732-0511	150A	20
	87	16
	246	21
5310-00-732-0558	273A	16
	48	4
	60	8
5310-00-732-0559	254	5
	257	3
5310-00-735-5396	150	24
5940-00-735-5520	49	9
	49	15
	66	11
5340-00-738-5182	117G	15
2805-00-752-0158	7	8
4820-00-752-9040	40	9
	40A	10
5315-00-753-3895	160	23
2530-00-753-7285	133	21
5330-00-753-9072	64	5
5320-00-754-0992	157	5
5330-00-757-1680	24	5
5310-00-761-0654	103A	10
	143A	25
	28	26
	163	35
	164	20
	273	17
5305-00-763-7829	212	1
5310-00-763-8919	130	5
5305-00-764-2970	167K	8
	170A	13
	200B	4
5340-00-764-7051	117D	3
	72	2
	79	37
	80	27
5315-00-765-2190	201B	18
	201L	11
5310-00-765-3197	266I	11
5310-00-768-0318	66	1
	246	20
5310-00-768-0319	204A	31
	59	14
5315-00-770-9181	266J	12
	266L	17
	266N	2
5975-00-771-6634	76	11
5310-00-771-6722	167H	10
5310-00-772-0442	46	24
5365-00-772-2322	76	6
5935-00-772-2344	76	19
5935-00-772-3307	76	20
5935-00-773-1428	80	1
5310-00-774-7293	74	7
5305-00-781-3926	1	5
	189I	11
	195F	19
	195H	7
	195J	8
	195K	4
	196B	4
	196D	12
	196G	8
5305-00-781-3927	143A	4
	167G	8
	173	12
	189J	38
	195G	7
	195H	9
	195I	8
	196D	31
	265H	2
	266H	6
	273	28
	273A	15
	42A	19
5305-00-781-3928	138A	4
	143A	10
	167C	12
	167G	25
	167U	30
	176	11
	189A	21
	189B	10
	189M	1
	196D	31
	202B	3
	202E	4

CROSS REFERENCE INDEXES
NATIONAL STOCK NUMBER

STOCK NUMBER	FIG.	ITEM	STOCK NUMBER	FIG.	ITEM
5305-00-781-3929	173	8		189N	9
	174	9		195D	7
	195	21		195E	14
	196G	43		195F	15
	273A	4		197	13
5305-00-781-3930	188K	10		266J	21
	188N	11		266K	1
	188O	8		266L	1
5305-00-782-9489	167U	15	5340-00-809-1490	118	14
	189A	18		252	11
	189B	12		267A	4
	189O	11		81	26
	195I	7	5340-00-809-1492	100	15
	195J	6		100A	9
	195K	6		117G	2
	265E	10		228A	48
	35	24		30	15
	250	14		51	22
4910-00-785-6437	299	15		79	24
4820-00-786-3971	24	8		228	49
	24	11	5340-00-809-1494	49	7
5945-00-789-3706	54	10		72	8
2590-00-801-2355	55	11		79	18
5925-00-803-4424	283	3		81	12
5325-00-804-2027	24	17	5340-00-809-1500	72	30
5331-00-805-2966	117F	4	5310-00-809-3078	11	29
6145-00-805-3354	BULK	41		161	2
5310-00-807-1466	196B	14		164	4
	196C	9		164A	4
5310-00-807-1475	201B	13		204A	28
	201L	16		208	16
5310-00-807-1476	201B	16		208	29
	201L	17		208A	18
5310-00-807-1477	201B	25		266I	12
	201L	25		68	11
5935-00-807-4109	225F	3	5310-00-809-3079	246	24
	249A	14	5310-00-809-4058	12	15
	252H	8		127A	16
	59	9		156	22
5305-00-808-0864	173	5		161	12
	174	12		162	14
	175	8		162	23
	183	7		164	2
	189I	4		164A	2
	189M	3		200G	12

CROSS REFERENCE INDEXES
NATIONAL STOCK NUMBER

STOCK NUMBER	FIG.	ITEM	STOCK NUMBER	FIG.	ITEM
	204A	17		201L	32
	207A	5		25	41
	220A	5		25	50
	227D	12		45	2
	28	22		207	10
	33	19		207	25
	35	13		220	9
	54	6		221	5
	55	2		256	7
	56	9		261	19
	59	15	5310-00-809-5998	42	2
	66	4		113	17
	67	10		119	17
	79	30		130	6
	112	15		246	17
	118	15		273	2
	123	5	5310-00-809-8533	140	14
	133	12	5310-00-809-8544	17	5
	139	14	5310-00-809-8546	274B	8
	140	6		51	11
	157	8		51A	11
	166A	49	5970-00-812-2969	249B	16
	167B	49		BULK	48
	205	29		BULK	59
	205A	27	5305-00-813-2785	249	11
	212	41		249	28
	213	28	5310-00-814-0672	72	21
	213A	2		114	4
	225	3	5310-00-814-0673	122	7
	228	46		126A	33
	228A	45		133	33
	25	2		147	1
	31	4		163A	6
	237	27		164A	13
	249	32		165	26
5310-00-809-4061	1	3		167C	7
	114	14		167D	8
	120	14		167F	18
	134	21		167H	25
	201C	7		167U	3
5310-00-809-4085	133	16		189E	12
	135	2		195D	3
	153	6		202E	3
	162	7		205A	12
	165	18		206	5

CROSS REFERENCE INDEXES
NATIONAL STOCK NUMBER

STOCK NUMBER	FIG.	ITEM	STOCK NUMBER	FIG.	ITEM
	208	1		196G	57
	217A	6		200B	13
	230	13		200F	28
	230A	13		200H	16
	230B	22		265	12
	236	10		266J	5
	237	13	5325-00-823-5999	157	2
	249	12		158	11
	265F	1		212	23
	266A	8		227	7
	266B	12		227A	11
	266O	11		227D	8
	266P	4		247	6
	70	8	5310-00-823-8803	152	5
	80	7		158	41
	163	6	5310-00-823-8804	12	20
	204	10		150A	7
	204	29		30	3
	204B	15		33	29
	212	28	5970-00-827-6566	49	10
	217	6		49	16
5315-00-815-8840	121	4		66	12
	123	17		255	14
	123A	7	5340-00-827-8314	127A	10
5120-00-816-7059	291	17	5315-00-828-5487	11	13
5306-00-819-3038	24	12	5310-00-830-7825	22	9
5331-00-819-5111	266H	5	5325-00-832-5650	59	3
	266I	4	5305-00-832-5743	59	2
	266J	14	5310-00-832-6852	51	15
	266L	8		51A	18
	266N	9	5340-00-833-3049	99	1
5310-00-820-6653	152	6	5340-00-833-8476	74	9
	201H	2	5935-00-833-8561	75	11
5305-00-821-3869	189B	9	5970-00-833-8562	249A	17
	189G	7		71	3
	189I	30	5310-00-834-7606	261	13
	189J	8	5310-00-834-8732	48	6
	189K	7	5315-00-839-2325	201K	16
	189L	17		33	20
	189N	12		33	30
	189O	23	5315-00-839-2326	162	1
	189P	17		196C	31
	195G	7	5315-00-839-5820	160	19
	195H	3	5315-00-839-5821	106	1
	195I	3		167H	5

CROSS REFERENCE INDEXES
NATIONAL STOCK NUMBER

STOCK NUMBER	FIG.	ITEM	STOCK NUMBER	FIG.	ITEM
	167T	18		36	15
	169J	18		38A	24
5310-00-840-6222	133	15	5310-00-849-6882	150	9
5315-00-840-9653	201K	22	5310-00-850-6993	134	3
5310-00-841-1131	22	1		134	8
5315-00-842-3044	123A	9		148	2
	85	1		149	19
	121	11	5310-00-850-7004	114	10
	123	19		114	17
	163	13		120	10
	163A	14		120	17
	201K	26		134	3
5340-00-843-7825	228	31		134	8
	228A	31		148	10
	79	10		149	14
	80	13		154	8
	267	8	5325-00-853-9713	226	5
5330-00-843-9235	136	13		227B	2
5306-00-844-0036	261	5		249	3
5315-00-844-3964	167T	59		249	8
5315-00-846-0126	150	8	3110-00-854-1504	117	6
	263	15	5340-00-854-6729	79	28
5935-00-846-3884	77	1		140	7
5305-00-846-5703	166B	31		237	24
	167U	27	5340-00-854-6730	39	6
	173	6		237	14
	174	13		39A	6
	175	6	5305-00-855-0957	196D	40
	176	13		212	9
	183	8	5305-00-855-0963	200G	7
	188O	10	5305-00-857-6886	150A	12
	189A	19		167U	26
	189B	22		175	11
	189I	23		195B	5
	189J	29		195C	5
	195E	10		196C	12
	196D	48		196D	1
	196G	45		200	12
	198	18		202C	13
	200	9	5320-00-864-6203	156	13
	204	17		158	48
5330-00-848-4439	138	11	5310-00-866-4417	125A	15
2530-00-848-4581	131	16		141A	13
	131A	16		142A	15
5310-00-849-3589	207B	43		148	20

CROSS REFERENCE INDEXES
NATIONAL STOCK NUMBER

STOCK NUMBER	FIG.	ITEM	STOCK NUMBER	FIG.	ITEM
	253	5	5360-00-902-8068	196C	29
4730-00-871-6729	20	6	5975-00-903-2284	84	8
5365-00-877-4956	23	7	5340-00-904-3705	80	18
5310-00-877-5972	189I	26		258	4
	189O	3	5310-00-905-0762	117H	8
	189P	19		204A	16
	195F	7		228	36
	195G	2		228	42
5310-00-877-5975	25	57		228A	36
6220-00-880-1624	57	4		255	1
5120-00-880-4268	297	4	5310-00-905-4600	108	13
5310-00-880-7744	210A	20		123A	11
	68	2	4730-00-908-3193	276F	2
	246	13	4730-00-908-3194	138A	29
5340-00-881-5303	21	7		204	32
5310-00-883-2237	50	1		233	3
5315-00-886-5726	200F	3		249A	2
5360-00-887-1536	24	3		249E	1
5315-00-887-1539	24	22		37	7
5310-00-889-2528	228	15		40A	12
	228A	15	4730-00-908-3195	228	25
	266G	3	4730-00-908-6292	138A	16
5305-00-889-2999	79	26		20	16
5305-00-889-3000	204A	42		35	2
	236	22	4730-00-909-8627	266F	6
5305-00-889-3002	50	51		274A	3
3110-00-892-0896	117	18		29	19
9905-00-893-3570	49	4		40	8
	49	11	4730-00-911-5707	13	1
	49	17		139	4
	66	13	5310-00-913-5474	67	7
	66	22	5305-00-914-3818	12	8
	66	27		12A	25
5925-00-894-8015	56	13	4030-00-916-2141	150	18
5310-00-896-0903	134	22	5310-00-922-2017	167A	12
4730-00-897-5497	140	13		209A	3
5975-00-899-4606	138C	9		210A	27
	266M	14		64	3
3110-00-900-2560	97	11		81	2
5360-00-900-2564	23	25		167	12
5935-00-900-6281	225F	2		212	48
	249A	15		264	2
	252H	9	5340-00-922-6300	80	15
9905-00-901-2942	243	7	5340-00-922-6302	72	23
5340-00-901-8132	117D	6	5999-00-926-3144	249A	23

CROSS REFERENCE INDEXES
NATIONAL STOCK NUMBER

STOCK NUMBER	FIG.	ITEM
5340-00-926-5449	255	20
5305-00-926-5518	253	16
5310-00-926-5913	236	11
5940-00-926-8034	BULK	53
5340-00-929-1794	258	6
4720-00-930-2231	BULK	51
5310-00-930-8214	163A	9
	202B	23
	202C	11
	207B	30
5310-00-931-8167	138C	4
	162	20
	167H	22
	201H	3
	205	15
	217B	6
2510-00-933-2893	208	7
	208A	9
2510-00-933-2895	208	7
	208A	9
5310-00-934-9747	233	29
5310-00-934-9751	23	3
	50	49
	233	19
5310-00-934-9757	22	7
	53	1
5310-00-934-9758	100A	25
	189G	39
	204A	5
	204A	21
	204B	20
	70	9
	81	4
	205	1
	205A	2
	205C	10
	205C	17
	228	32
	228A	32
	70A	8
5310-00-934-9764	61	4
	133	19
5310-00-935-3569	252A	5
5310-00-935-3607	207A	22
	221C	4
5331-00-935-9136	10	3
	252	2
5310-00-937-0453	12A	22
	135A	3
2010-00-937-5599	98	26
5305-00-940-9445	12	13
5310-00-941-6019	117D	7
	200F	10
5315-00-945-0548	205C	5
9905-00-945-7637	76	3
5305-00-947-4351	249D	11
5305-00-947-4355	144	16
	144A	12
5305-00-947-4358	142	22
	142A	18
	143	6
	143A	17
5305-00-947-4359	144	10
	144A	9
5305-00-947-4360	144	15
	144A	13
	145	7
	150A	4
5305-00-947-4361	114	1
	120	1
	120	21
	141A	6
	144A	19
	145	7
	154	2
5305-00-947-4362	114	21
5305-00-947-4363	120	1
	225A	24
5310-00-952-3567	248	12
4730-00-954-1251	112	10
	251	16
5305-00-954-3937	12	5
	12A	2
	162	9
	201K	41
	266O	3
5340-00-954-6014	100	19
	100A	23
	126A	22
	127A	2

CROSS REFERENCE INDEXES
NATIONAL STOCK NUMBER

STOCK NUMBER	FIG.	ITEM	STOCK NUMBER	FIG.	ITEM
5320-00-957-2500	243	2		260	49
5305-00-957-6269	204A	6	5305-00-984-4992	266O	10
	205C	14		266P	8
5305-00-957-6272	201G	24		74	1
5305-00-958-5246	79	27	5305-00-984-5675	196D	34
	235	19	5305-00-984-6191	52	7
	235A	18		238	11
5305-00-958-5247	189G	2	5305-00-984-6192	69	9
5305-00-958-5253	210A	29	5305-00-984-6193	166A	36
5305-00-958-5254	210A	24		167B	36
5305-00-958-5469	212	45		17	6
5305-00-958-5471	200E	12		263	5
	201J	3	5305-00-984-6194	196B	11
	201K	36	5305-00-984-6195	166B	21
	201O	3		196C	5
5340-00-958-8457	72	24		274B	1
5340-00-960-9340	136	23		53	4
2530-00-960-9363	136	14	5305-00-984-6196	166A	10
5305-00-964-0503	167G	24		167B	10
	167U	27	5305-00-984-6197	201F	4
	195D	9		249B	9
5310-00-964-3415	167H	33		56	12
	167U	4	5305-00-984-6208	209	11
	189E	6	5305-00-984-6210	189P	13
	189N	5		249B	10
	195D	16		63	1
6240-00-966-3831	59	4	5305-00-984-6211	61	6
5305-00-968-3513	201M	11	5305-00-984-6212	166B	5
	202B	14		200E	14
5305-00-968-3514	201M	16		213A	12
5305-00-968-3515	201P	2		25	26
5315-00-973-8637	200H	26		266J	9
5310-00-982-4908	102	22		266K	8
	260	32		266M	5
5310-00-982-4939	255	21		61	6
5940-00-983-4067	73	7		81	1
	75	6		160	3
5305-00-983-6622	225I	2		262	6
5315-00-983-7402	201K	45	5305-00-984-6213	161	31
	204	8		204B	9
5305-00-983-7452	200C	5	5305-00-984-6214	166A	16
5310-00-983-8483	200G	9		196G	14
5310-00-984-3807	123A	21	5305-00-984-6221	229	5
	158	9	5975-00-984-6582	126	2
5305-00-984-4988	256	13		225F	5

CROSS REFERENCE INDEXES
NATIONAL STOCK NUMBER

STOCK NUMBER	FIG.	ITEM	STOCK NUMBER	FIG.	ITEM
	249B	1		195J	2
	252D	1		195K	2
	252H	2		202B	12
	267A	6		207B	22
5310-00-984-7042	69	3	5305-00-988-1724	231	3
5305-00-984-7363	237	23	5305-00-988-1725	166A	14
5305-00-984-7365	201K	48		167B	14
5340-00-984-8540	266O	13		255	5
	29	15		287A	11
	31	13		54	9
	37	10		55	1
	63	10		81	24
	79	11		226	15
	79	32		227C	14
	126	3		227C	26
5340-00-984-8541	49	13		227D	28
	228	27	5305-00-988-1727	166B	8
	252D	4	5305-00-988-7613	200E	3
4730-00-985-4804	299	16	5340-00-989-1771	29	1
5975-00-985-6630	117C	2		30	11
	12	18		79	35
	12A	19		99	6
	40A	2		112	12
	80	17	5305-00-989-7434	25	33
	81	7		50	43
	99A	7		213	11
5310-00-987-1294	189F	2		227	5
	189G	9		236	8
	189H	3		237	11
	189I	5		250	6
	189J	7	5305-00-989-7435	166	9
	189K	4		204A	18
	189L	5	5340-00-989-9222	79	16
	189M	2		80	9
	189N	8		81	3
	189O	6		139	19
	189O	12		236	14
	189P	9	5310-00-990-1361	266	5
	195D	6	5305-00-990-6444	50	30
	195E	11		50	47
	195F	5	5340-00-990-7610	232	15
	195F	17	5305-00-990-8632	167O	8
	195G	6		169D	6
	195H	2		173	7
	195I	2		174	11

CROSS REFERENCE INDEXES
NATIONAL STOCK NUMBER

STOCK NUMBER	FIG.	ITEM	STOCK NUMBER	FIG.	ITEM
	175	10		258	5
	188	11		281C	2
	195H	7		281D	3
	195I	4		287A	3
	196B	1		70	5
	196C	22		70A	2
	196D	31		70A	10
	202C	1		79	7
5305-00-993-1611	204A	41		80	8
5305-00-993-1848	74	12		81	5
	237	20	5310-01-012-8962	35	14
3120-00-993-4152	24	44	5331-01-013-3723	225I	7
5315-00-993-5276	201J	11	9905-01-013-8723	71	5
6620-00-993-5546	62	8		73	8
5340-00-993-6207	249A	26		77	6
	249D	14		78	5
5305-00-995-3440	51	19	4720-01-014-4915	BULK	8
	51A	22		BULK	45
5310-00-997-1888	81	27		BULK	56
	249	22	5305-01-016-4344	263	18
	249	29	5305-01-016-5469	68	12
6220-00-998-6142	59	6	5340-01-017-4630	27	3
4730-01-003-5105	116A	1	5320-01-019-5694	207A	20
	128A	1	5310-01-021-9027	131	14
	251	7		131A	8
	255	8	5320-01-023-2529	157	1
	258	1		158	10
	44A	28		212	22
	99	4		226	8
	112	26		227A	10
	118	12		227C	6
	99A	5		227C	29
4720-01-003-6706	BULK	6	2540-01-023-5116	150	10
4730-01-004-8346	112	20	2520-01-024-1273	25	20
4820-01-005-2994	246	3	5120-01-026-1666	301	9
5305-01-005-6715	167T	56	5340-01-026-3250	161	10
5305-01-006-2043	201B	28	3110-01-027-4475	113	9
5305-01-006-2053	100A	19		119	9
	200E	23	5305-01-032-2312	134	20
	51	28	5305-01-032-4165	47	15
	228	29	5310-01-032-4169	46	28
	228	48	5325-01-032-4222	47	12
5305-01-006-5736	201L	36	5310-01-032-4827	46	29
	213A	5	2530-01-033-1855	136	10
	225C	3	2530-01-033-4237	136	12

CROSS REFERENCE INDEXES
NATIONAL STOCK NUMBER

STOCK NUMBER	FIG.	ITEM	STOCK NUMBER	FIG.	ITEM
5320-01-033-8638	165	35	5310-01-058-3986	236	13
2530-01-034-1715	136	22	4720-01-058-7213	BULK	39
5320-01-034-1884	227D	24	9905-01-060-0479	260	29
5325-01-034-2757	47	14	5310-01-066-6759	208	17
5975-01-034-5871	232	7		208	33
	237A	2		208A	19
	249A	27		31	19
	249C	10		165	4
	266F	2	6220-01-067-4718	57	5
	84	9	3010-01-068-6996	50	12
5940-01-035-4212	73	9	2920-01-068-7182	KITS	93
	75	4	2530-01-069-0906	50	27
	264	14	5310-01-069-5243	17	9
5305-01-035-8766	70	14		274B	7
5330-01-037-0663	60	9		70	4
3110-01-037-4661	47	13		263	7
5310-01-038-8500	136	1	4730-01-070-7680	25	39
5310-01-038-8501	136	11		118	6
5310-01-038-9579	166B	16		251	3
	249	5	4730-01-074-0060	228	26
	249	18		228A	26
4820-01-039-3769	138	10	5305-01-076-0334	197	20
5305-01-039-6633	49	19	5305-01-076-3150	56	7
5306-01-040-2041	136	3	5330-01-076-6172	60	10
3110-01-040-6541	136	8	5120-01-078-1899	290	18
5330-01-041-9721	BULK	3	5120-01-079-8023	299	1
4730-01-042-5266	299	17	5120-01-082-6436	297	6
5310-01-042-8391	46	31	5120-01-082-6447	297	7
5330-01-044-0703	KITS	82	5305-01-083-1591	209A	2
5130-01-044-7196	298	12	5305-01-084-6067	100	20
5320-01-044-7545	158	28	5320-01-084-6101	156	19
5130-01-045-3507	298	13		158	37
5310-01-046-0186	46	18	5320-01-084-9235	156	17
5975-01-048-2922	117A	1		158	38
4730-01-048-5260	29	5	5320-01-085-9995	156	12
4730-01-048-7873	29	6		158	20
4730-01-048-7874	29	9	5320-01-086-1143	156	3
5970-01-048-9378	264	12		158	16
4730-01-049-1559	29	10	5340-01-087-4612	216	10
5310-01-050-6565	47	5		217B	11
5935-01-050-6586	75	2	5325-01-088-7468	228	19
5305-01-052-4438	167B	7		228A	19
5120-01-053-4159	290	17	4730-01-088-7798	14	4
5120-01-055-1308	290	12	4730-01-089-4596	62	3
4730-01-058-0900	118	11	2530-01-089-4992	66	16

CROSS REFERENCE INDEXES
NATIONAL STOCK NUMBER

STOCK NUMBER	FIG.	ITEM
4730-01-091-2809	28	12
4730-01-092-1904	232	8
6635-01-093-3710	293	1
4730-01-095-7717	29	8
5330-01-096-7699	82	2
5330-01-096-9650	136	20
5331-01-097-6619	69	13
2530-01-097-7659	136	4
2640-01-098-2029	131	8
	131A	9
5310-01-100-2067	60	5
5305-01-101-2011	207B	27
5360-01-101-2143	200H	19
5340-01-101-8262	30	2
5310-01-102-3270	12	6
	166B	27
	167G	3
	167H	8
	167H	21
	167I	8
	167K	3
	167T	9
	167T	41
	167U	20
	169J	9
	189G	4
	204B	25
	205A	23
	205B	6
	207A	2
	207B	28
	209C	3
	223A	2
	28	2
	51	25
	100	14
	100A	7
	117B	6
	117F	5
	117G	8
	117H	7
	123	13
	123A	3
	126A	10
	12A	4

STOCK NUMBER	FIG.	ITEM
	133	28
	140	21
	157	20
	161	6
	166B	9
	169J	39
	170A	12
	170A	24
	189B	26
	196C	2
	196C	30
	196D	22
	196G	6
	200E	17
	200F	6
	200H	8
	200H	29
	200H	34
	201	6
	201G	3
	201K	17
	201K	34
	201M	6
	201M	14
	201N	4
	202D	9
	204A	8
	204B	8
	225G	3
	225K	3
	235A	4
	27	18
	288A	5
	29	12
	33	2
	37	11
	65	13
	83	3
	84	6
	121	2
	160	27
	205	11
	208	32
	223	3
	223	8

CROSS REFERENCE INDEXES
NATIONAL STOCK NUMBER

STOCK NUMBER	FIG.	ITEM	STOCK NUMBER	FIG.	ITEM
	232	2		167T	23
	233	9		167U	13
	250	8		167V	2
	251	14		169J	2
	252	12		169J	14
	263	9		189E	10
	38A	7		189M	14
	40	4		195D	2
	235	3		196D	6
	40A	8		201K	42
	51A	26		201L	30
5310-01-102-7356	122	2		201O	9
5310-01-103-6042	138A	22		202E	2
	252D	2		207B	49
5130-01-104-5370	298	11		217A	5
5342-01-104-7700	200H	32		266A	7
	201	2		266B	11
6220-01-107-2613	60	4		266O	2
5331-01-107-4950	13	2		80	6
5935-01-110-7065	77	10		126	5
5330-01-112-1533	19	2		129	4
8315-01-115-7617	BULK	32		204	11
2920-01-117-3251	22	5		204	28
5305-01-117-3396	227D	10		208	2
5310-01-117-3446	201K	35		212	3
2910-01-117-7252	24	19		215	4
5310-01-118-2248	22	33		215	12
5305-01-118-4114	22	3		216	5
4730-01-118-8278	27	6		220	5
	30	5		233	23
	31	11		236	2
5310-01-119-1024	123A	16		237	5
	126A	18		248	8
	133	32		262	2
	138C	2		265E	4
	142A	7	5310-01-119-3668	123A	18
	163A	27		126	4
	164A	14		126A	19
	167C	4		215	3
	167F	15		262	5
	167G	10	4730-01-119-6895	28	16
	167H	18	5310-01-121-1703	111	2
	167I	15		116	2
	167T	4		116A	4
	167T	14		116A	15

CROSS REFERENCE INDEXES
NATIONAL STOCK NUMBER

STOCK NUMBER	FIG.	ITEM	STOCK NUMBER	FIG.	ITEM
	141A	7	5310-01-130-4274	155	1
	167F	2	5120-01-130-8865	294	4
	167U	23	5340-01-130-9437	196G	24
	170A	16	5310-01-132-8275	195E	5
	2	9		195E	8
	200H	11		195F	11
	201K	10	5310-01-134-0206	150A	31
	265B	2	5320-01-134-5844	210A	2
	265D	6	5340-01-134-5937	186	5
	266A	2		284	1
	36	13	5325-01-135-4290	204	35
	134	21	5310-01-135-4730	104	1
	141	3	5320-01-135-7319	156	4
	142	11		158	15
	142A	11		201K	12
	143	3	5320-01-136-1782	156	1
	143A	7		158	17
	144	2		165	21
	144A	3		166	11
	145	1		201K	4
	148	4	5320-01-136-1785	165	30
	149	2	5310-01-136-4888	47	16
	150	2	5325-01-136-7662	47	11
	150A	16	5320-01-138-4239	222	6
	153	1	5305-01-138-9540	249C	7
	207	17		51	4
	207	29		51A	4
	253	3		83	7
	256	3	5305-01-140-9118	137	7
	257	11		198	8
	261	3		200E	21
	263	11		253	25
	38A	2	4030-01-142-0456	196C	4
3040-01-123-4942	136	9	2805-01-142-2631	7	15
2530-01-123-8787	KITS	34	5310-01-143-0512	101	8
	KITS	81		101A	9
5310-01-126-9404	225A	14	5305-01-143-2328	228	40
	230	16		228A	40
	230A	16	5320-01-143-5075	156	20
5310-01-127-2456	79	33		158	35
6220-01-128-0087	60	2		165	13
5365-01-129-0399	207	13		166	6
5306-01-130-0457	266A	10	5320-01-143-5079	165	10
	266B	8		216	11
5342-01-130-1141	20	12		216	18

CROSS REFERENCE INDEXES
NATIONAL STOCK NUMBER

STOCK NUMBER	FIG.	ITEM	STOCK NUMBER	FIG.	ITEM
	217B	12	2815-01-148-9540	7	1
5310-01-144-2779	136	19	3020-01-148-9547	8	5
5120-01-144-4484	293	3	5310-01-149-0870	8	4
5325-01-144-4871	65	8	5330-01-149-0874	3	4
5315-01-145-5251	201K	11		39	12
5310-01-147-4052	114	2		39A	15
	120	2	2520-01-149-1221	90	2
	130	2	2520-01-149-1868	93	3
	141A	5	5305-01-149-1938	126	9
	142	23		126A	15
	142A	17		249B	8
	143	1		8	17
	144	5		41	7
	144A	6	5306-01-149-4395	7	4
	145	8	5306-01-149-4398	9	2
	149	18	5340-01-149-4434	251	9
	154	1	2520-01-149-4993	102	33
	207A	32	5935-01-149-5165	73	6
	207B	19	5315-01-149-5433	4	7
	225A	23	3020-01-149-5915	8	7
2930-01-147-4198	39	3	5306-01-149-6278	16	2
	39A	3	5306-01-149-6280	9	12
2815-01-147-4200	7	18		39	16
2815-01-147-4201	7	19		39A	19
2590-01-147-4285	11	2	5360-01-149-6308	138	9
5310-01-147-8744	4	9	2520-01-149-7861	KITS	25
2990-01-147-9284	14	9	3020-01-149-7941	90	8
2815-01-147-9358	7	16	5340-01-149-7976	3	28
5310-01-148-0240	65	4	5340-01-149-7977	3	12
	233	2	5306-01-149-9668	3	21
5310-01-148-2687	102	35	5315-01-149-9712	3	27
4730-01-148-2758	39	17	2815-01-150-0673	7	17
	39A	20	4730-01-150-0879	13	6
	41	1	5306-01-150-1190	41	11
5306-01-148-3666	39	10		98	33
	39A	11	5330-01-150-1215	18	2
5306-01-148-3667	21	5	5307-01-150-1227	39	5
5305-01-148-3686	4	10		39A	7
2815-01-148-3771	5	1	5365-01-150-1386	8	15
2815-01-148-6966	9	13	5305-01-150-1521	21	22
2815-01-148-6971	8	14	5307-01-150-1549	9	15
5305-01-148-7464	9	11	2815-01-150-2198	6	4
5306-01-148-8198	5	2	2520-01-150-3931	92	15
3020-01-148-8846	8	2	2520-01-150-3932	91	3
2815-01-148-9533	9	1		92	16

CROSS REFERENCE INDEXES
NATIONAL STOCK NUMBER

STOCK NUMBER	FIG.	ITEM	STOCK NUMBER	FIG.	ITEM
5310-01-150-4003	101	13		155	2
	101A	14		155A	2
	108	3		201G	12
	114	13	5340-01-151-9957	21	4
	120	13	5310-01-152-0598	123A	4
	134	13		227C	18
	153	7		227C	31
	162	4		237A	6
	207	12		49	18
	207	27		55	7
	207B	42		66	34
	266C	8		72	7
5325-01-150-4982	90	23		79	17
5305-01-150-5895	8	3		80	3
5330-01-150-5944	20	1		81	8
5307-01-150-5992	11	26		121	6
5307-01-150-5993	9	6		123	6
5360-01-150-6086	95	5		214	9
5330-01-150-6239	95	15		225G	2
5360-01-150-7829	95	9		231	1
5325-01-150-7830	93	10		236	19
5935-01-150-8322	77	14		237	29
5999-01-150-8808	76	8		255	11
	77	12		263	3
5307-01-150-9538	21	6	3120-01-152-1989	4	4
	25	15	3120-01-152-2039	4	3
5320-01-150-9681	167	23	3120-01-152-2611	8	13
	179	10	3120-01-152-2612	8	16
5305-01-150-9781	11	25	6680-01-152-2845	138	1
5320-01-151-1061	165	12	3120-01-152-4239	4	2
	165	23	5306-01-152-4693	34	1
5315-01-151-4180	19	5		63	11
5306-01-151-4925	19	6	5306-01-152-4696	103	21
5325-01-151-6117	11	3	3120-01-152-5945	8	12
5310-01-151-7347	111	7	3120-01-152-5946	8	9
	116	7	5935-01-152-6814	78	10
	116A	16	3120-01-152-8200	8	11
	125A	18	3120-01-152-8201	4	2
	12A	21	3120-01-153-7545	4	2
	134	19	5930-01-153-8215	65	10
	135A	2	5935-01-153-9320	71	16
	141A	16	5365-01-154-1484	7	9
	148	5	3120-01-154-4369	90	25
	149	23	5365-01-154-4378	3	11
	154	11	5935-01-154-6233	73	5

CROSS REFERENCE INDEXES
NATIONAL STOCK NUMBER

STOCK NUMBER	FIG.	ITEM	STOCK NUMBER	FIG.	ITEM
5340-01-154-6559	95	8	5340-01-159-8536	24	24
5330-01-154-7159	11	10	2590-01-159-8757	105	3
3120-01-154-7174	90	15	5342-01-160-4397	11	5
	90	24	5325-01-160-4618	21	21
3120-01-154-8516	90	25	5315-01-160-4642	103	23
3120-01-154-8517	90	25	5325-01-160-4693	93	5
5325-01-154-8561	90	3	4710-01-161-0138	20	13
5325-01-154-8562	90	1		BULK	37
5307-01-154-9586	9	3	3120-01-161-4033	90	25
9320-01-155-2369	BULK	33	5365-01-162-3797	3	13
5310-01-155-2503	9	16	3120-01-162-5787	90	25
	62	9	2520-01-162-8985	105	2
	85	4		105	9
	128	7	5305-01-162-9713	138	12
3120-01-155-3517	6	8	5330-01-163-2614	95	3
5310-01-155-3857	72	11	5340-01-163-4773	119	40
3110-01-155-4440	103	38	2815-01-163-7189	7	14
3120-01-155-4468	93	18	2815-01-163-7190	7	14
4320-01-155-5145	138	6	3040-01-163-7208	11	8
4320-01-155-5153	138	13	4720-01-163-7833	BULK	5
3020-01-155-5779	8	6	5310-01-164-4693	266	6
4720-01-155-7784	BULK	18	5305-01-164-6320	9	9
	BULK	55	5340-01-164-6436	3	5
4720-01-156-0549	BULK	72	4730-01-164-7028	25	12
5330-01-156-5147	11	7	4720-01-164-7803	BULK	11
5305-01-156-8692	124	18	5310-01-165-1312	47	7
	125	17	5360-01-165-1563	11	16
3120-01-156-8763	92	14	5306-01-165-2425	6	5
3120-01-157-0914	8	10	5310-01-165-3331	11	28
5331-01-157-1884	138	14		21	19
5325-01-157-6764	103	41	5310-01-165-3333	6	7
5310-01-157-6773	7	12	5306-01-165-4283	103	19
5340-01-158-0098	73	4	3120-01-165-4826	6	8
5325-01-158-2182	93	4	5306-01-165-5582	11	12
9905-01-158-7981	243	4	4820-01-165-9596	22	10
5306-01-158-9917	25	16	2815-01-166-0621	3	19
5305-01-159-0065	138B	11	5342-01-166-1534	21	16
5330-01-159-2811	102	25	4730-01-166-2244	88	13
3120-01-159-5773	90	25	5340-01-166-5640	3	3
4720-01-159-5796	21	3	5310-01-166-8517	207B	12
	BULK	17	3110-01-167-2443	KITS	85
5340-01-159-6626	21	18	3120-01-167-4172	KITS	84
2520-01-159-7757	102	39	6685-01-167-4298	64	1
5340-01-159-8534	24	24	5315-01-167-5584	23	10
5340-01-159-8535	24	24	5330-01-168-3870	102	3

CROSS REFERENCE INDEXES
NATIONAL STOCK NUMBER

STOCK NUMBER	FIG.	ITEM	STOCK NUMBER	FIG.	ITEM
2930-01-168-7870	44	1	5360-01-175-7269	7	11
2815-01-168-7871	11	9	5330-01-176-0825	113	12
4730-01-168-7872	13	5		119	12
2520-01-168-7878	102	32	2590-01-176-1177	BULK	49
2920-01-168-7891	48	2	2940-01-176-1427	268	1
2910-01-168-7905	19	1	5935-01-176-1708	200G	10
3110-01-169-0734	KITS	86		70	12
5120-01-169-4876	295	2	5120-01-176-1845	294	5
4720-01-169-9891	BULK	12	3120-01-177-3064	4	4
5120-01-170-3278	295	3	5365-01-177-5720	113	34
5940-01-170-4956	255	15		119	34
5325-01-171-3392	91	10	4730-01-177-7501	88	3
	92	9		88	5
5120-01-171-5233	290	3	4910-01-178-0722	294	3
2815-01-172-6780	7	3	4910-01-178-0724	300	1
5315-01-173-3397	196D	19	4910-01-178-6551	301	7
	196D	46	5307-01-178-7445	41	9
3120-01-173-3728	4	3	4910-01-178-8865	293	5
4820-01-173-6883	27	22	5120-01-179-1032	297	8
2510-01-173-9316	208	10	4910-01-179-2517	297	5
5340-01-174-2271	113	32	5360-01-179-4106	151	1
	119	32	4710-01-179-4346	252	5
2540-01-174-7696	164	19	4820-01-179-4869	301	14
5310-01-174-8091	102	36	4910-01-179-5530	296	3
5330-01-174-8145	117	13	2530-01-179-7511	KITS	7
5330-01-174-8146	117	7	5365-01-180-2585	117	5
2520-01-174-8153	KITS	88	5940-01-180-3655	66	5
5310-01-174-8158	103	22	6625-01-180-6542	52	10
5365-01-174-8174	KITS	46	6685-01-180-9037	52	9
5365-01-174-8186	113	4	6620-01-181-1757	52	11
	119	4	3120-01-181-7938	4	4
5340-01-174-8493	113	13	9905-01-181-9456	243	3
	119	13	4820-01-182-1073	24	8
5310-01-174-8607	113	28	5340-01-182-1074	34	2
	119	28	4730-01-182-6565	41	6
5325-01-174-8626	90	21	5331-01-183-0971	13	8
5307-01-174-8640	102	7	5930-01-183-6637	62	10
3040-01-174-9130	117	1	5930-01-183-6757	64	7
5970-01-174-9449	49	3	5340-01-183-7233	57	3
2520-01-174-9554	102	34		58	3
2520-01-174-9580	117	11	5999-01-183-9530	228	20
5310-01-175-0617	117	9		228A	20
5365-01-175-3593	KITS	45	5905-01-183-9636	233	1
3120-01-175-3813	4	3	6160-01-184-0728	68	5
2920-01-175-7214	62	2	2920-01-184-1054	50	21

CROSS REFERENCE INDEXES
NATIONAL STOCK NUMBER

STOCK NUMBER	FIG.	ITEM
2910-01-184-2159	28	9
5995-01-184-2228	73	1
4730-01-184-4760	112	28
5330-01-184-5421	124	12
	125	8
2910-01-184-5498	232	5
2540-01-184-5503	228	23
	228A	23
5935-01-184-6417	76	16
5330-01-184-6492	252	6
4730-01-184-6971	126	30
	127	17
5305-01-185-0114	210A	9
	212	15
	222	3
	224	5
	227D	22
5342-01-185-0116	210A	35
	212	55
5340-01-185-0401	210A	30
	212	44
5340-01-185-0404	212	42
5330-01-185-0587	33	25
5940-01-185-1122	22	14
2540-01-185-3113	196D	24
9515-01-185-3118	209	7
9905-01-185-3143	242	1
6680-01-185-3202	252	3
9340-01-185-3757	212	54
5340-01-185-4959	210A	38
	212	5
4730-01-185-5348	101A	17
	25	38
	107	3
	112	29
	116A	18
	117H	1
	118	17
	251	5
	44A	2
2510-01-185-6112	2	4
2510-01-185-6113	2	10
2510-01-185-6114	2	12
2510-01-185-6115	2	1
2540-01-185-6117	51A	9
2510-01-185-6118	163	17
	163A	18
4710-01-185-6179	20	3
2510-01-185-6647	143	18
	143A	11
2510-01-185-6648	143	18
	143A	11
4720-01-185-6673	BULK	15
2530-01-185-6713	124	20
	125	15
2530-01-185-6714	125	9
2510-01-185-6715	160	31
5340-01-185-6997	212	10
5340-01-185-6998	212	27
5340-01-185-7024	212	18
5306-01-185-7048	110	15
	125A	1
	125B	1
	137	10
5306-01-185-7050	26	1
5306-01-185-7052	221A	5
	221B	5
5306-01-185-7071	68	3
5310-01-185-7188	66	6
	67	4
5310-01-185-7208	66	8
	67	2
5315-01-185-7421	33	28
5120-01-185-7955	295	5
5120-01-185-7956	295	8
5120-01-185-7957	296	9
5340-01-185-7959	250	9
5120-01-185-7960	295	21
5120-01-185-7962	296	8
5120-01-185-7963	297	2
5120-01-185-7964	296	2
5120-01-185-7965	297	9
4910-01-185-7966	298	2
9905-01-185-7977	238	23
2530-01-185-7998	124	14
	125	10
5120-01-185-8024	295	10
4720-01-185-8152	25	7
6150-01-185-8240	228	18
	228A	18

CROSS REFERENCE INDEXES
NATIONAL STOCK NUMBER

STOCK NUMBER	FIG.	ITEM
5340-01-185-8619	161	8
5305-01-185-8647	158	4
	212	19
	265	3
5305-01-185-8657	124	17
	125	1
5305-01-185-8674	205	5
	205A	6
5310-01-185-8689	153	12
5310-01-185-8690	124	19
	125	16
5340-01-185-8724	208	5
	208A	7
5315-01-185-8781	130	1
5340-01-185-8820	196G	26
5340-01-185-8821	160	29
4730-01-185-9453	37	8
2540-01-185-9530	160	18
	201G	4
2540-01-185-9656	33	27
4710-01-185-9667	126	38
4710-01-186-0665	27	17
4820-01-186-0822	127A	7
2590-01-186-0863	141	10
	141A	18
2540-01-186-0969	228	10
	228A	10
5310-01-186-1245	156	27
5340-01-186-1280	208	6
	208A	8
5340-01-186-1281	208	6
	208A	8
5365-01-186-1294	155	10
5315-01-186-1352	3	14
5340-01-186-1388	162	8
5340-01-186-1817	124	10
	125	6
4720-01-186-2358	BULK	16
2510-01-186-3106	156	21
2510-01-186-3107	158	34
5180-01-186-3114	293	8
3040-01-186-3718	153	13
5360-01-186-3737	33	26
2530-01-186-3740	154	10
5360-01-186-4845	130	3
5305-01-186-5381	17	1
	88	25
3120-01-186-5527	114	20
	120	7
	120	20
5315-01-186-5633	162	5
4730-01-186-5994	31	16
4720-01-186-6018	37	5
2910-01-186-6038	28	15
2540-01-186-6039	150	4
5310-01-186-6930	66	9
5310-01-186-7066	66	7
	67	3
5306-01-186-7129	163	20
	163A	21
5340-01-186-7173	2	13
3120-01-186-7181	125	4
5340-01-186-7229	163	22
	163A	23
5365-01-186-7233	125	3
5342-01-186-7236	155	6
5342-01-186-7382	210A	22
	212	35
5340-01-186-7593	212	25
5340-01-186-7594	212	11
5340-01-186-7658	160	8
5340-01-186-7664	144	9
	144A	8
5310-01-186-7702	74	3
3120-01-186-7714	33	24
3120-01-186-7715	163	21
	163A	22
5330-01-186-7757	28	35
5365-01-186-7764	152	1
5980-01-186-8319	51	2
	51A	2
2590-01-186-8704	275	17
5340-01-186-8768	31	18
5340-01-186-9496	162	3
5340-01-186-9606	28	18
4710-01-186-9617	28	8
4710-01-186-9620	127	5
5307-01-187-0519	11	17
5310-01-187-0678	248	15
5980-01-187-0791	51	3

CROSS REFERENCE INDEXES
NATIONAL STOCK NUMBER

STOCK NUMBER	FIG.	ITEM	STOCK NUMBER	FIG.	ITEM
	51A	3	5340-01-188-1018	210A	5
5340-01-187-0892	27	2		212	21
	112	21	5310-01-188-1093	133	5
2920-01-187-1310	50	8	5307-01-188-1229	153	14
5325-01-187-1604	35	31	4720-01-188-1370	40	12
5310-01-187-3485	152	2		40A	13
5120-01-187-3607	297	1	5340-01-188-3176	24	41
5120-01-187-3659	296	4	4720-01-188-3190	BULK	14
5120-01-187-3660	296	1	2940-01-188-3224	25	3
5330-01-187-5148	28	42	2590-01-188-3225	210A	32
4710-01-187-6759	27	12		212	50
4730-01-187-6892	62	5	2510-01-188-3228	162	28
4730-01-187-6929	13	4	2540-01-188-3229	222	5
5342-01-187-7029	25	31	2540-01-188-3239	142	25
2990-01-187-7030	35	9		142A	19
2510-01-187-7031	143	7	3040-01-188-3242	24	23
	143A	15	3040-01-188-3243	24	37
2510-01-187-7033	144	6	2910-01-188-3249	23	27
	144A	7	2910-01-188-3250	23	30
2540-01-187-7034	142	25	2910-01-188-3252	22	31
	142A	19	2910-01-188-3255	24	9
2510-01-187-7037	152	8	2920-01-188-3259	22	12
5305-01-187-8757	51	10	3040-01-188-3261	24	39
	232	17	2520-01-188-3282	22	28
	51A	10	2940-01-188-3387	25	24
9905-01-187-9468	239	1	4710-01-188-3515	100	6
5305-01-187-9555	69	7		100A	12
4710-01-188-0028	40	10	4710-01-188-3516	100	10
5305-01-188-0489	24	45		100A	11
5305-01-188-0490	24	45	2530-01-188-3520	121	7
5305-01-188-0491	24	45		123A	6
5305-01-188-0492	24	45	2920-01-188-3863	32	1
5305-01-188-0493	24	45	4720-01-188-3909	40	2
5305-01-188-0494	24	45	5315-01-188-4490	210A	19
5315-01-188-0495	23	26		212	37
5310-01-188-0745	133	3	5307-01-188-4684	9	5
5315-01-188-0765	24	1	2590-01-188-5079	200H	31
5315-01-188-0766	24	1		201	1
5365-01-188-0785	23	39	2590-01-188-5080	201	8
5330-01-188-0911	25	36	2590-01-188-5081	200H	18
5305-01-188-0948	24	40	3120-01-188-5082	196C	14
5325-01-188-0960	23	28		196G	50
5325-01-188-0962	23	13		197	2
5365-01-188-0993	23	4	2940-01-188-5117	25	17
5340-01-188-1017	108	16	5305-01-188-5133	86	2

CROSS REFERENCE INDEXES
NATIONAL STOCK NUMBER

STOCK NUMBER	FIG.	ITEM
7690-01-188-5144	240	5
4710-01-188-6050	28	7
5305-01-188-6566	24	45
5305-01-188-6567	24	30
5310-01-188-6743	22	24
5360-01-188-6806	24	35
5310-01-188-6861	55	6
2510-01-188-7381	166A	40
	167B	40
2590-01-188-7394	201N	1
	207A	9
3110-01-188-7682	24	7
2530-01-188-8446	121	8
	123A	12
5305-01-188-9707	KITS	94
5180-01-189-0448	291	6
4710-01-189-0705	100	2
4330-01-189-0889	31	6
2510-01-189-0891	143	7
	143A	15
2910-01-189-0895	23	22
2530-01-189-0897	65	9
4330-01-189-1007	31	1
2590-01-189-1067	210A	33
	212	52
2930-01-189-1744	44	4
2940-01-189-1809	25	55
4820-01-189-2107	233	38
2520-01-189-2135	KITS	44
5315-01-189-2141	23	37
2910-01-189-2142	22	25
3040-01-189-2163	23	11
2540-01-189-2193	150	6
2530-01-189-2195	134	10
4720-01-189-2218	103A	11
	233	39
	249A	30
5360-01-189-3466	24	10
5305-01-189-3769	43	2
4730-01-189-4600	268	3
5977-01-189-4988	KITS	3
5342-01-189-5452	155	5
5340-01-189-6748	33	15
5340-01-189-7554	232	21
5340-01-189-7558	65	2
5340-01-189-7640	127	2
5340-01-189-7739	208	20
	208A	22
5310-01-189-8468	44	3
5310-01-189-8476	126	29
	127	16
2930-01-189-8643	44	17
2910-01-189-8851	11	11
4730-01-189-8854	28	11
4710-01-189-9727	196B	22
	196G	52
2590-01-189-9736	196C	21
	198	9
	200F	22
	200H	4
	201	10
2510-01-189-9741	204	16
2510-01-189-9748	166A	40
	167B	40
2510-01-189-9828	196C	25
5340-01-189-9861	25	14
5340-01-189-9979	160	15
	201G	27
3110-01-189-9980	33	23
5342-01-189-9982	2	7
2910-01-190-0069	23	41
5315-01-190-0429	23	15
5315-01-190-0430	123A	25
5340-01-190-0807	108	1
5340-01-190-0810	153	5
5340-01-190-0815	201K	3
5306-01-190-2193	68	4
5340-01-190-2248	112	18
	142	28
	142A	14
5945-01-190-3559	22	17
4330-01-190-3579	31	7
	KITS	2
5305-01-190-4073	31	2
5306-01-190-4553	31	3
5305-01-190-4555	241	1
5310-01-190-4607	43	7
	44	14
5340-01-190-5100	28	38
5305-01-190-5745	23	9

CROSS REFERENCE INDEXES
NATIONAL STOCK NUMBER

STOCK NUMBER	FIG.	ITEM
5306-01-190-5760	108	2
5307-01-190-5854	44	11
5315-01-190-5908	208	21
	208A	23
5360-01-190-6214	44	10
5360-01-190-6215	23	1
5360-01-190-7234	KITS	4
5330-01-190-7509	KITS	41
5330-01-190-7510	KITS	40
5307-01-190-7650	87	11
5342-01-190-7735	87	13
7690-01-190-8501	245	2
5305-01-191-0374	24	29
5310-01-191-0440	22	13
5325-01-191-0595	153	4
5340-01-191-0746	28	37
5340-01-191-0748	28	32
5340-01-191-3222	161	17
5315-01-191-3393	24	2
4820-01-191-4262	136	7
3120-01-191-4637	KITS	97
2920-01-191-6534	KITS	98
5325-01-191-7555	165	19
5340-01-191-8161	134	15
	154	5
2910-01-191-8464	24	31
5306-01-192-2207	133	26
5340-01-192-2256	117G	16
	30	14
	99	10
2920-01-192-2956	KITS	95
2920-01-192-2959	KITS	91
5340-01-192-3414	143	5
3040-01-192-3673	267	17
2590-01-192-4425	251	11
3040-01-192-4466	7	2
2920-01-192-4473	KITS	96
2920-01-192-4474	KITS	5
2540-01-192-4500	158	30
2540-01-192-4504	205	9
2590-01-192-4525	196D	8
	196G	62
3040-01-192-4585	24	37
5330-01-192-5779	24	6
4810-01-192-5817	139	5
2540-01-192-5937	196D	41
2510-01-192-5947	158	32
2540-01-192-5948	209	8
2540-01-192-5949	196D	28
	200	4
	202	3
	202C	4
2510-01-192-5950	206	16
	207A	19
5340-01-192-6030	23	17
6625-01-192-7498	66	28
4820-01-192-7678	251	18
4710-01-192-7965	204	31
4820-01-192-8030	251	2
4730-01-192-8086	112	19
	44A	22
2540-01-192-8283	206	16
	207A	19
5331-01-192-8892	44	5
5330-01-192-8916	161	16
4710-01-192-9546	204	37
2540-01-192-9718	196D	21
2540-01-192-9721	205	9
5340-01-193-0251	28	41
6220-01-193-1970	59	1
5330-01-193-2338	208	9
	208A	11
9905-01-193-4065	238	5
5945-01-193-7175	55	8
4910-01-193-7808	289	1
5977-01-193-9931	65	11
2540-01-194-0197	196D	26
2590-01-194-0309	201K	14
5330-01-194-0473	28	10
5310-01-194-0481	44	2
5325-01-194-0562	29	24
5342-01-194-3128	156	6
	158	54
5365-01-194-5093	206	24
	207A	25
5340-01-194-5294	11	14
4720-01-194-5334	250	23
5342-01-194-5806	204A	37
	205	28
	205A	26

CROSS REFERENCE INDEXES
NATIONAL STOCK NUMBER

STOCK NUMBER	FIG.	ITEM
5360-01-194-6070	207	4
	207	21
	207B	39
5310-01-194-6459	196D	36
	200	24
	204A	25
	207B	48
6620-01-194-6586	62	11
2590-01-194-6990	233	36
5310-01-194-7066	158	56
	165	7
4010-01-194-8546	208	8
	208A	10
5331-01-194-8966	44	9
2530-01-194-9868	22	15
5306-01-195-0277	205	16
	205A	13
5331-01-195-1500	44	8
5340-01-195-1575	66	3
6680-01-195-2146	267	10
5120-01-195-2721	295	4
4730-01-195-3803	129	8
	252	7
3040-01-195-4173	166A	33
	167E	9
5120-01-195-4551	295	11
5365-01-195-4949	196D	5
	210	8
5340-01-195-5397	201K	29
5325-01-195-8002	68	6
5342-01-195-8039	166A	15
	167B	15
5340-01-195-8837	204B	17
	205	21
	205A	18
5331-01-195-8889	267	16
5330-01-195-9049	206	23
	207A	26
5330-01-195-9083	204	2
5340-01-195-9107	166A	18
	167B	18
5180-01-195-9777	294	2
5120-01-196-0084	295	1
5315-01-196-0277	196D	25
5340-01-196-0572	196D	38
2590-01-196-1290	227D	7
2540-01-196-1291	227D	13
3040-01-196-1493	166A	33
	167E	9
5365-01-196-2699	201K	30
2530-01-196-4724	165	1
2540-01-196-4920	149	7
5307-01-196-4937	113	24
	119	24
2590-01-196-5228	11	1
2510-01-196-5311	161	4
2540-01-196-5313	212	8
2590-01-196-5314	227D	7
2510-01-196-5316	166A	15
	167B	15
2540-01-196-5317	166A	22
	166B	12
	167B	22
	167E	24
	169	3
5325-01-196-5631	200H	30
2590-01-196-7281	123	9
	BULK	68
5330-01-196-7968	167B	26
5330-01-196-7969	166A	26
5340-01-196-8028	208	11
	208A	13
5340-01-196-8158	204B	11
	205	22
	205A	19
5120-01-197-0236	291	15
5310-01-197-1100	182	25
	207A	40
5340-01-197-1238	204B	4
	205	4
	205A	5
5340-01-197-1294	216	8
	217B	9
5340-01-197-1444	204	12
5306-01-197-1492	89	1
	126	11
5305-01-197-1594	207	2
	207	19
	207B	37
2530-01-197-2160	134	16

CROSS REFERENCE INDEXES
NATIONAL STOCK NUMBER

STOCK NUMBER	FIG.	ITEM	STOCK NUMBER	FIG.	ITEM
	154	6		167E	8
5340-01-197-2382	250	20	5340-01-197-6715	200H	24
5340-01-197-2438	59	11	5340-01-197-6716	200H	20
5340-01-197-2642	206	20	5340-01-197-6753	204	39
	207A	28		204A	3
5340-01-197-2716	206	22	5340-01-197-6755	196D	49
	207A	38		200	11
5340-01-197-2717	204	7	5305-01-197-7547	65	12
5340-01-197-2736	204B	14	5340-01-197-8239	204B	23
	205	17		205	24
	205A	14		205A	21
5315-01-197-3122	200H	23	5330-01-197-8298	204	15
5325-01-197-3460	121	9	2510-01-197-8572	223	7
	232	20		223A	22
5340-01-197-3461	36	11	5340-01-197-8673	201G	25
5340-01-197-3478	200H	36		208	13
	201	5		208A	15
2590-01-197-4898	227	6		227	10
	247	5		227D	23
2590-01-197-4899	196G	54		248	3
	200	13	5340-01-197-8674	208	34
	200C	14		209B	7
2540-01-197-4900	166A	22	5340-01-197-8675	166A	6
	166B	12		166B	2
	167B	22		167B	6
	167E	24	5365-01-197-9383	166A	21
	169	3		167B	21
5340-01-197-4901	167B	9	5305-01-197-9417	266B	14
2590-01-197-5446	158	49	5340-01-198-0686	249	6
9330-01-197-5458	248	13		249	17
2540-01-197-5463	248	20	5305-01-198-1619	249	19
5340-01-197-5470	236	1	5305-01-198-1621	201L	9
	237	4		223A	16
5340-01-197-5477	117F	9	5310-01-198-1722	161	26
	157	16		196D	20
	227D	20		209	9
7690-01-197-5500	240	4		223	25
	243	1	5310-01-198-1723	208	12
5975-01-197-5505	235	1		208A	14
	235A	1		212	20
2540-01-197-5528	249	4		223A	18
2510-01-197-5546	249	13		227A	6
2510-01-197-5547	249	13		233	28
5310-01-197-6253	223	26	5340-01-198-2240	166A	8
5340-01-197-6714	166A	29		166B	25

CROSS REFERENCE INDEXES
NATIONAL STOCK NUMBER

STOCK NUMBER	FIG.	ITEM	STOCK NUMBER	FIG.	ITEM
	167B	8		127A	12
5340-01-198-2241	166A	8	5310-01-199-2293	196G	10
	166B	25		213	29
	167B	8	5305-01-199-3371	201G	15
5340-01-198-2253	201J	4		208	14
5340-01-198-2255	224	2		208A	16
2590-01-198-2895	227	6		227	9
	247	5		227A	5
5315-01-198-3346	200H	25	5310-01-199-3440	212	39
5365-01-198-3401	208	36	5340-01-199-3498	139	2
5310-01-198-3428	166A	27		166A	6
	167B	27		166B	2
5305-01-198-3440	266B	7		167B	6
5340-01-198-3457	208	31	5340-01-199-3499	196	1
	209B	4	5340-01-199-3510	249	30
5365-01-198-3463	208	35	2590-01-199-5423	33	16
5310-01-198-3487	166A	13	2510-01-199-5748	178	2
	167B	13		227D	17
5365-01-198-3505	208	30	2540-01-199-5812	167B	29
5360-01-198-3525	166A	43		167E	8
	167B	43	5340-01-199-6103	204B	18
5340-01-198-5455	204B	13		205	18
	205	18		205A	15
	205A	15	2540-01-199-6759	227	1
5305-01-198-5510	117G	7		227D	2
2510-01-198-7413	210A	23	2540-01-199-6760	227A	2
	212	34	2540-01-199-6761	227A	3
3040-01-198-7473	196B	10	2540-01-199-7778	228	5
5340-01-198-7580	167B	29		228A	5
	167D	8	5330-01-200-0466	35	19
	167E	8		250	16
2540-01-198-7581	166A	29	1015-01-200-0869	219	4
	167E	8		235	9
5120-01-198-7583	293	4	6220-01-200-0897	156	10
5310-01-198-7585	131	7		158	51
	131A	7	3040-01-200-1015	167B	33
5330-01-198-8789	167B	26		167E	9
5306-01-199-1314	206	3	2540-01-200-1994	226	9
	207A	3		227C	9
2510-01-199-1498	167B	9		227C	21
2510-01-199-1499	166A	32		249	20
	167B	32	2540-01-200-1995	226	14
	167E	10		227C	12
5340-01-199-1662	204	14		227C	24
4730-01-199-1878	126A	27		249	24

CROSS REFERENCE INDEXES
NATIONAL STOCK NUMBER

STOCK NUMBER	FIG.	ITEM
3120-01-200-4105	204	34
4730-01-200-4277	112	9
	251	20
5210-01-200-4526	291	18
2540-01-200-6611	227A	1
2540-01-201-2356	166A	9
	166B	11
2540-01-201-2357	166A	9
	166B	11
5315-01-201-3592	133	6
5995-01-201-4128	237	3
5995-01-201-4129	237	2
5365-01-201-4749	166A	5
	167B	5
5180-01-201-4978	298	10
5995-01-201-7495	237	1
5120-01-201-7857	295	20
5340-01-201-9076	166A	6
	166B	22
	167B	6
5305-01-202-2676	123	16
4710-01-202-8245	252	1
5330-01-202-8360	196B	19
	196G	34
2540-01-202-8545	235	18
	235A	17
2540-01-202-8547	165	16
5340-01-203-0324	166A	18
	167B	18
4010-01-203-0412	206	2
	207A	4
5340-01-203-1980	156	11
5342-01-203-2822	157	22
	166A	48
	167B	48
	227D	27
5310-01-203-3217	166A	20
	167B	20
5310-01-203-3230	196B	9
5340-01-203-5629	200H	22
5340-01-203-5630	200H	27
5340-01-203-5634	201K	19
	207A	42
2540-01-203-5664	145	12
5340-01-203-6542	227B	6
	227C	4
	249	9
5330-01-203-6551	113	2
	119	2
2540-01-203-7721	226	9
	227C	9
	227C	21
	249	20
5305-01-203-8346	227	4
	227D	5
5315-01-203-8543	166A	41
	167B	41
5340-01-203-8608	210A	36
	212	4
5340-01-203-8675	166A	17
	167B	17
	196G	12
5340-01-203-9391	202	2
	202C	7
3130-01-203-9870	108	11
2510-01-203-9883	145	9
9905-01-203-9994	238	4
9905-01-203-9996	238	17
7690-01-204-0076	238	18
7690-01-204-0077	238	1
5310-01-204-1039	204B	26
	69	4
5306-01-204-2139	166A	28
	167B	28
5315-01-204-2328	166A	39
	167B	39
5340-01-204-2458	166A	6
	166B	22
	167B	6
5340-01-204-2584	144	8
	144A	16
5340-01-204-3862	227	3
	227D	4
	247	2
5305-01-204-4190	196C	16
	197	3
5305-01-204-6502	55	9
9905-01-204-7776	238	9
7690-01-204-7785	204A	38
	245	1

CROSS REFERENCE INDEXES
NATIONAL STOCK NUMBER

STOCK NUMBER	FIG.	ITEM
2590-01-204-7836	196G	56
	200C	9
5315-01-205-2988	210A	18
	212	36
5325-01-205-3203	237	31
	237A	8
5365-01-205-5377	149	20
	256	17
5325-01-205-5378	236	17
	237	26
	237A	4
5975-01-205-5379	233	33
	258	3
5342-01-205-5381	72	28
5325-01-205-5966	102	11
2990-01-205-5981	50	2
2590-01-205-8607	196B	20
9905-01-205-8635	238	15
	251	1
5340-01-205-9021	226	17
	227C	13
	227C	25
	249	26
5340-01-205-9022	226	17
	227C	13
	227C	25
	249	24
	249	26
5310-01-205-9056	226	13
	227C	11
	227C	23
5305-01-205-9158	207B	2
5120-01-206-3818	290	4
2540-01-206-4115	227	2
	227D	3
	247	1
4730-01-206-4810	13	10
5340-01-206-5040	200E	24
	201K	38
5305-01-206-7217	249	27
5305-01-206-7219	170A	2
	27	10
	29	18
	81	11
5310-01-206-7306	2	5
	39	8
	79	34
	273	24
	273A	6
	39A	9
	42	11
	42A	9
	45	15
	72	5
5305-01-206-8401	127A	8
	72	26
	79	20
5340-01-207-0379	158	24
5340-01-207-0717	157	19
	227D	33
	247	10
5975-01-207-1706	71	2
5120-01-207-5563	291	13
5306-01-207-7487	248	7
6150-01-207-8120	236	5
	237	9
5307-01-207-9004	41	8
5305-01-207-9311	189P	3
5305-01-208-0274	264	1
5120-01-208-1767	291	12
6210-01-208-4790	52	1
5310-01-208-5252	248	23
5325-01-208-5424	236	4
	237	7
5310-01-208-7576	236	9
	237	12
5340-01-208-7670	227D	26
5120-01-208-7752	291	16
5120-01-208-7753	291	1
5120-01-208-7771	291	14
5340-01-208-8688	25	29
5975-01-208-9618	49	12
2510-01-209-0502	160	22
4910-01-209-0729	294	6
7690-01-209-0864	240	1
2510-01-209-1881	213	13
2540-01-209-4590	160	25
5340-01-209-4870	166A	11
	166B	20
	167B	11

CROSS REFERENCE INDEXES
NATIONAL STOCK NUMBER

STOCK NUMBER	FIG.	ITEM	STOCK NUMBER	FIG.	ITEM
5935-01-209-5594	73	3		44A	20
5330-01-209-5997	210B	9	5340-01-210-2747	12	28
	211	8		12A	20
	212	53	2540-01-210-2749	204	13
2540-01-209-6049	207	3	2540-01-210-2787	165	28
	207	20	5360-01-210-2852	34	3
	207B	38	5325-01-210-2870	28	4
4710-01-209-6746	250	5	4820-01-210-3488	28	5
5120-01-209-6870	290	1	4710-01-210-3504	233	6
2540-01-209-6875	262	9	6150-01-210-3596	228	18
5340-01-209-7387	72	9		228A	18
5305-01-209-7668	103	26	2990-01-210-4276	38	1
5330-01-209-7669	50	3	5365-01-210-4903	48	1
5310-01-209-7702	36	4	4730-01-210-5785	25	30
	212	38	2910-01-210-5872	30	1
	215	18	5305-01-210-6249	227D	1
5330-01-209-7723	133	24	2910-01-210-6938	24	43
5331-01-209-7726	104	3	2510-01-210-6939	38	1
5340-01-209-7767	118	10	2510-01-210-6941	144	14
	144	7		144A	14
	144A	17	2510-01-210-6942	145	10
	145	6	5340-01-210-7966	142	24
5340-01-209-7794	55	10	5120-01-210-8793	293	2
5340-01-209-7796	127	1	5310-01-211-0691	262	10
5340-01-209-7799	79	40	5310-01-211-0698	261	2
5340-01-209-7802	155	11	5340-01-211-0838	196D	29
5340-01-209-7807	257	2		200	5
5365-01-209-7831	145	3		202	4
5365-01-209-7832	142A	9		202C	5
	145	3	4730-01-211-0896	30	7
5340-01-209-7834	161	27	5305-01-211-1405	157	13
5325-01-209-7843	133	4	5305-01-211-1439	52	3
	233	26	5305-01-211-1450	27	4
4720-01-210-0484	14	3		28	24
5340-01-210-0692	29	21	5305-01-211-1470	165	29
5945-01-210-1299	50	20	5340-01-211-3132	160	14
4910-01-210-1318	293	6	5340-01-211-3137	35	32
5365-01-210-1584	164	3	5975-01-211-3142	29	16
	164A	3	2510-01-211-3229	167B	33
5365-01-210-1629	161	7		167E	9
5325-01-210-1633	79	12	5305-01-211-3786	250	4
5305-01-210-2309	255	19	5310-01-211-3811	137	5
	260	46		189G	16
2520-01-210-2624	117	20		35	30
4730-01-210-2732	37	4		101	99

CROSS REFERENCE INDEXES
NATIONAL STOCK NUMBER

STOCK NUMBER	FIG.	ITEM	STOCK NUMBER	FIG.	ITEM
	250	18	2590-01-213-1629	261	15
5340-01-211-4025	35	36	5305-01-213-4149	135	5
2920-01-211-4935	50	79	5310-01-213-4174	254	9
5310-01-211-5037	25	22		257	4
5365-01-211-5063	60	12		260	4
5342-01-211-5327	50	60	5310-01-213-4185	113	27
5340-01-211-5593	228	9		119	27
	228A	9	5310-01-213-4192	117D	4
5330-01-211-5856	52	5		163	29
5305-01-211-6049	54	3		163A	30
6105-01-211-6635	233	13	5365-01-213-4239	210A	11
5305-01-211-7415	243	5		212	24
5340-01-211-7436	161	13	5340-01-213-4662	161	15
5305-01-211-7478	134	14	5340-01-213-4665	80	24
	154	4	5340-01-213-4667	72	27
2990-01-211-8587	35	29	5305-01-213-5024	232	14
2590-01-212-1057	204	30		266F	4
5310-01-212-2213	134	12		266I	9
	134	18		51A	12
5310-01-212-2303	196D	27	5315-01-213-5545	160	24
	200	3	5340-01-213-5600	122	1
	202C	8		123A	10
5365-01-212-2325	162	15	5340-01-213-5735	160	2
5340-01-212-2407	80	22	2540-01-213-8057	261	1
5930-01-212-3373	64	6	5305-01-213-9852	163A	3
4720-01-212-3531	139	12		164A	9
5340-01-212-3553	35	26	5310-01-213-9964	22	2
5340-01-212-4714	12	27	2540-01-214-1568	228	6
5365-01-212-4736	160	20		228A	6
5340-01-212-4887	35	8	5340-01-214-2089	142	10
2590-01-212-4956	233	37		142A	23
2540-01-212-4959	228	2	2520-01-214-2565	133	18
	228A	2	5340-01-214-3615	233	7
2920-01-212-4976	50	67	5940-01-214-4563	73	10
2540-01-212-5814	160	21	5340-01-214-4675	261	10
2590-01-212-5868	267	1	5310-01-214-4955	50	50
4720-01-212-6403	233	27	5365-01-214-4987	155	13
3040-01-212-7616	7	5	5340-01-214-4992	207	6
4720-01-212-8269	29	20		207	23
5935-01-212-9631	79	13		207B	41
5330-01-213-1312	BULK	29	5325-01-214-5007	228	21
5310-01-213-1333	205	20		228A	21
	205A	17	4720-01-214-5757	25	37
4720-01-213-1574	140	11	5310-01-214-7784	50	44
2590-01-213-1628	261	21	5342-01-214-7809	262	8

CROSS REFERENCE INDEXES
NATIONAL STOCK NUMBER

STOCK NUMBER	FIG.	ITEM
5325-01-214-7817	75	9
2590-01-215-4325	141A	12
	142A	10
5305-01-215-5174	10	1
	72	13
5310-01-215-5356	158	31
	232	22
5340-01-215-5478	233	31
5310-01-215-7311	254	2
4010-01-215-7466	262	3
5305-01-215-9425	23	2
5331-01-215-9638	23	5
5365-01-216-0364	196D	30
	200	38
	202	5
	202C	9
5310-01-216-7390	48	5
5331-01-216-7392	267	3
5331-01-216-7393	267	4
5180-01-216-8643	296	7
5935-01-216-8763	71	11
2540-01-217-2669	33	21
5310-01-217-5205	79	2
	161	29
4010-01-217-7086	262	3
5320-01-218-0721	41	5
5310-01-218-3190	160	9
2910-01-218-4489	KITS	1
5340-01-218-7739	204	33
5120-01-218-8235	296	5
5365-01-219-3528	150	3
5340-01-220-3084	163	11
4730-01-221-7320	100A	3
5306-01-223-4345	46	20
5310-01-225-0701	47	2
5120-01-227-1680	295	13
5120-01-229-0842	297	3
5340-01-229-3632	12	19
	12A	15
5305-01-229-7855	228	3
	228A	3
5306-01-230-3354	11	21
4710-01-230-5611	22	18
	22	20
2910-01-230-9007	23	24
5120-01-230-9421	290	19
5310-01-231-0596	119	6
4910-01-231-1709	298	1
4910-01-231-3671	293	7
8145-01-231-3747	246	1
5310-01-231-7455	25	44
2910-01-232-1044	23	23
5310-01-232-1361	46	11
5310-01-232-1362	46	21
5331-01-232-2145	22	11
5331-01-232-7886	23	38
5330-01-233-2778	23	20
5330-01-233-2848	24	42
5330-01-233-8597	23	18
5325-01-234-0447	6	3
5330-01-234-2615	22	26
5310-01-234-9415	79	23
5310-01-234-9416	166B	6
	200F	9
	201J	6
	204A	7
	204B	5
	205	2
	205A	3
	224	6
	227D	16
	228	38
	228	44
	228A	38
	228A	43
	266J	7
	266K	6
	266M	3
	274A	1
	274B	4
	281C	3
	70A	7
2530-01-235-8688	131	16
	131A	16
5331-01-236-0472	23	35
5330-01-236-0474	23	21
5331-01-236-0475	24	36
5331-01-236-0476	24	26
5340-01-236-2112	204	38
5305-01-236-4349	100	17

CROSS REFERENCE INDEXES
NATIONAL STOCK NUMBER

STOCK NUMBER	FIG.	ITEM	STOCK NUMBER	FIG.	ITEM
	100A	21	5210-01-249-0370	292	1
	12A	16	5310-01-249-0899	250	1
5930-01-237-7322	62	1	2520-01-249-1434	85	10
5935-01-238-0543	77	8		106	3
4910-01-238-2551	299	14	2510-01-249-1580	204	20
5340-01-238-9543	25	56	2510-01-249-1581	204	21
5330-01-239-0659	206	23	2510-01-249-1582	204	21
3120-01-239-5132	24	24	2510-01-249-1583	204	22
5325-01-242-7083	233	11	9905-01-249-1612	238	22
5120-01-242-8165	290	20	5342-01-249-3502	165	31
5305-01-243-3759	45	16	5342-01-249-5389	165	31
5306-01-243-4650	11	4	5342-01-250-1098	20	15
	137	2	5340-01-250-3240	22	16
5340-01-244-5765	28	14	5305-01-250-6583	51	21
5310-01-244-7459	226A	3	2510-01-250-7593	213	22
5342-01-246-1120	29	25	2510-01-250-7597	213	1
5365-01-246-8281	163	14	5310-01-250-7679	11	20
	163A	15	5310-01-250-7835	36	12
5340-01-246-8282	156	24		38A	21
2590-01-246-8288	210A	3	5310-01-250-7844	50	29
2540-01-246-8289	210A	1	5310-01-251-0711	54	11
2540-01-246-8292	223	18	5310-01-251-0748	165	15
	223A	3	5310-01-251-0760	196G	33
5220-01-247-0361	292	4		60	13
3040-01-247-0893	24	4	5330-01-251-1607	89	7
6675-01-247-2286	292	3	5120-01-251-1901	291	7
5120-01-247-4749	290	9	2590-01-251-3068	213	18
5120-01-247-6629	295	7		213A	18
2590-01-247-7910	158	7	2590-01-251-3070	213	16
5340-01-247-7912	210A	10		249J	9
2540-01-247-7914	165	34	2590-01-251-3071	213A	6
2540-01-247-7915	165	34	4710-01-251-3073	213A	20
5340-01-247-7918	219	13	4710-01-251-3075	213	20
2590-01-247-7920	223	4		213A	21
	223A	19	4710-01-251-3076	204	27
5330-01-247-8438	44	6	4730-01-251-9373	117	29
5120-01-248-1808	290	5	2510-01-251-9995	213	19
5120-01-248-1809	290	10	5330-01-252-0461	44	12
5120-01-248-1810	290	11	9330-01-252-1239	126	28
2590-01-248-4873	141A	27		BULK	40
	145	12	2540-01-252-3386	182	21
5340-01-248-7646	158	43		207A	31
2510-01-248-8875	52	6	5330-01-252-5377	156	25
9905-01-248-9550	240	2	5330-01-252-5378	158	60
5210-01-249-0368	292	2	4820-01-252-6169	298	4

CROSS REFERENCE INDEXES
NATIONAL STOCK NUMBER

STOCK NUMBER	FIG.	ITEM
2510-01-252-6240	196D	3
	210	7
1010-01-252-6300	196G	4
5355-01-252-6504	166A	38
	167B	38
5310-01-252-7285	155	7
	155	15
	155A	3
5365-01-252-8026	165	27
2540-01-252-8460	182	21
	207A	31
5365-01-252-9214	163	12
	163A	13
5310-01-253-0058	158	58
5310-01-253-1618	196B	13
	196C	8
	51	23
	228	28
4720-01-253-2809	298	3
4720-01-253-2810	298	5
2510-01-253-2839	196G	28
5310-01-253-3148	290	7
5340-01-253-3757	156	16
	158	40
2590-01-253-3905	222	7
5340-01-253-5479	223A	21
5310-01-253-6439	35	21
	161	14
	162	10
5305-01-253-6508	291	4
6680-01-253-6782	298	9
5306-01-253-7073	11	19
5310-01-253-8437	101	12
	101A	13
	195H	5
	220	11
	221	6
	221A	7
5340-01-253-8933	196D	14
	196G	60
5310-01-253-8952	166A	12
	166A	37
	167B	12
	167B	37
5310-01-253-8953	166A	19
	166A	35
	167B	19
	167B	35
	167E	18
5310-01-253-8957	210A	21
5340-01-253-8971	166A	2
	167B	2
5365-01-253-8975	196G	21
5365-01-253-8980	166A	51
	166B	15
	167B	51
2510-01-254-1056	196G	16
2510-01-254-1500	167B	1
2510-01-254-1501	166A	1
5306-01-254-2358	117	3
5305-01-254-2453	205	25
	205A	22
5305-01-254-2459	204	1
	207A	39
5305-01-254-2460	158	25
5307-01-254-2504	200	37
	202	7
5310-01-254-4284	166A	3
	167B	3
5365-01-254-4394	196D	13
	196G	58
5310-01-254-5352	165	3
5306-01-254-5465	290	6
4730-01-254-6023	298	6
5306-01-254-6356	135	4
5340-01-254-7189	226	19
	227C	16
	227C	30
5340-01-254-7190	222	1
4710-01-254-7272	213	14
	213A	15
5330-01-255-0207	160	5
5330-01-255-0208	160	11
5365-01-255-0965	122	9
	123A	17
5325-01-255-1126	222	8
5340-01-255-1657	161	23
5306-01-255-2630	291	8
5310-01-255-2704	129	4
3020-01-255-2906	298	7

CROSS REFERENCE INDEXES
NATIONAL STOCK NUMBER

STOCK NUMBER	FIG.	ITEM	STOCK NUMBER	FIG.	ITEM
5305-01-255-3588	232	43	5330-01-258-4664	196G	17
5305-01-255-4611	228	22	5340-01-258-6158	209	3
5365-01-255-4633	196D	5		222	1
5365-01-255-4634	196D	5		224	8
5330-01-255-4986	267	18	2590-01-258-9491	196G	15
5365-01-255-4990	196D	5	5340-01-259-0329	223	1
5365-01-255-4991	196D	5	5340-01-259-0330	223	10
5320-01-255-6608	160	4		223	13
3120-01-255-9328	291	11		223A	9
5340-01-255-9510	157	9	4210-01-259-5634	225	1
	227D	14	5305-01-259-6322	74	4
5360-01-255-9899	163	24		213	4
	163A	25		227	3
5340-01-255-9918	166A	2	5310-01-259-7433	291	3
	167B	2	5340-01-259-8579	208	18
5340-01-255-9919	226	20		208A	20
	227C	17	5340-01-259-8600	204B	21
	227C	32		205	23
4030-01-256-0471	260	44		205A	20
6685-01-256-3406	298	8	2590-01-260-0214	201B	5
5340-01-256-4655	223A	15	5342-01-260-0215	201B	9
7690-01-256-4908	238	24		201L	21
7690-01-256-4909	238	25	2590-01-260-0216	201B	14
2930-01-256-5350	37	3		201L	22
2910-01-256-9157	22	32	2590-01-260-0217	201B	19
5340-01-256-9318	226	20		201L	19
	227C	17	5340-01-260-0218	201B	20
	227C	32		201L	27
5325-01-257-0801	204	23	5360-01-260-0700	122	10
2510-01-257-1572	196D	17		123A	15
	196D	45	5340-01-260-4881	204	24
4730-01-257-3348	117	22	5360-01-260-5649	24	32
	117A	5	5305-01-260-5737	23	16
2510-01-257-3747	196C	28	5340-01-260-5792	208	3
2540-01-257-3877	149	3		208A	3
2510-01-257-3903	167B	1	5340-01-260-9027	166	8
2510-01-257-3904	166A	1		227A	8
5310-01-257-7590	253	17	5340-01-260-9874	208	3
2590-01-257-8788	213A	17		208A	3
5310-01-257-9034	291	9	5340-01-260-9940	201K	20
5310-01-257-9101	291	10		201L	3
5310-01-258-2639	291	5	2590-01-261-0523	201B	21
5340-01-258-4529	201G	26	2590-01-261-2636	160	6
	223	21	2590-01-261-2637	160	12
	223A	6	2590-01-261-5484	160	13

CROSS REFERENCE INDEXES
NATIONAL STOCK NUMBER

STOCK NUMBER	FIG.	ITEM	STOCK NUMBER	FIG.	ITEM
2590-01-261-5485	216	7		202D	17
	217B	8		210A	31
2530-01-261-6844	131	16		267A	3
	131A	16	5305-01-264-5864	51	8
2530-01-261-6845	131	16	5305-01-264-5874	158	50
	131A	16	5320-01-264-5978	158	14
2530-01-261-6846	131	16		163	15
	131A	16		163A	16
6670-01-261-6847	131	16	5330-01-264-6537	246	5
2590-01-261-6851	213	21	5340-01-264-6540	246	8
	213A	23	5340-01-264-6541	246	25
2530-01-261-8011	131	16	5342-01-264-6543	246	22
	131A	16	5340-01-264-6544	246	6
2530-01-261-8012	131	16	3040-01-264-9554	201B	7
	131A	16		201L	24
2530-01-261-8013	131	16	2530-01-265-3148	124	4
	131A	16	2530-01-265-3153	124	4
5305-01-261-9483	207B	34	2590-01-265-3185	123	3
2590-01-262-4980	201B	3	5340-01-265-3674	246	26
2590-01-262-4981	201B	6	5340-01-265-3676	246	18
	201L	15	5120-01-265-4872	295	6
2510-01-262-6007	157	12	5360-01-265-8798	124	3
2510-01-262-6008	159	5	5360-01-265-8799	124	3
2510-01-262-6009	159	6	5340-01-265-8883	124	2
2510-01-262-6010	157	11	5340-01-265-8905	261	20
2590-01-262-7706	213	26	5365-01-265-8937	261	16
2590-01-262-7707	213	8	5365-01-265-8938	261	16
	213A	9	5365-01-265-8939	261	16
2530-01-262-8646	131	16	5340-01-266-2995	160	7
	131A	16	5310-01-266-6392	267	13
2530-01-262-8647	131	16	5340-01-266-6398	213	15
	131A	16		213A	16
2530-01-263-2268	131	16	5310-01-266-6425	24	27
	131A	16	2510-01-266-8013	196D	18
2590-01-263-3254	213	26		196D	44
	213A	27	5306-01-266-8274	160	30
5306-01-263-8889	44A	7	5325-01-266-8414	165	33
	45	9		166	2
	45A	7	5340-01-266-9173	255	3
5305-01-264-0923	200H	28	5365-01-267-6769	201B	12
5325-01-264-1522	166	3		201L	23
5305-01-264-3602	148	13	2520-01-267-7371	117	10
	149	10	5342-01-268-0921	196G	9
5365-01-264-4023	155	4	2520-01-268-1051	246	2
5305-01-264-5809	123	10	5305-01-268-5680	233	41

CROSS REFERENCE INDEXES
NATIONAL STOCK NUMBER

STOCK NUMBER	FIG.	ITEM	STOCK NUMBER	FIG.	ITEM
5310-01-269-0786	36	10		123A	19
5306-01-269-6254	201B	8	4730-01-274-1825	29	4
	201L	13	5995-01-274-5084	237A	1
5310-01-269-9245	163A	34	5342-01-274-9884	12	4
	164A	12		12A	1
	166B	24		BULK	70
	167T	58	5320-01-275-1998	156	7
	196G	18		158	53
	201L	8		232	19
	267A	1	5340-01-275-8567	201B	30
	79	4	5340-01-275-8568	205C	16
	163	32	5306-01-276-1621	261	12
	232	36	5305-01-276-4855	124	1
5330-01-270-1353	196C	26	5365-01-277-2387	261	14
5306-01-270-5448	273	15	5340-01-277-4427	123	4
	273A	17	5310-01-278-9555	108	4
	42A	7		125A	7
	45	10		125B	11
	45A	8		207A	17
5305-01-271-1806	150	11		207B	36
5365-01-271-2491	208	27		220A	18
	208A	30		221B	4
	262	4		221C	13
4010-01-271-2598	201B	15	4720-01-279-5149	275	16
	201L	12	2590-01-279-5714	33	7
5340-01-271-3059	246	7	5310-01-280-5796	72	17
5340-01-271-4281	201B	24		74	8
5340-01-271-4282	201B	29		256	15
5340-01-271-5866	189P	12	5330-01-281-6523	BULK	27
5320-01-271-6357	158	12	5330-01-282-2213	196D	10
	208A	27	5342-01-282-4853	68	8
	216	15	5360-01-282-9316	166A	23
	217B	10		166B	14
	235A	8		167B	23
	68	9	6220-01-284-2709	58	8
	216	9	5315-01-284-9812	33	14
5340-01-271-6461	166	13	5305-01-285-4923	48	11
5305-01-272-7422	100A	13	5340-01-285-5558	249A	9
5365-01-272-8376	117B	1	2530-01-285-8381	133	23
	33	3	5307-01-286-6007	201B	23
5310-01-272-9981	113	41		201L	26
	113A	2	5310-01-286-6077	153	9
	201G	20		162	26
6220-01-273-0500	52	4		189I	6
5306-01-273-6333	122	3		189J	2

CROSS REFERENCE INDEXES
NATIONAL STOCK NUMBER

STOCK NUMBER	FIG.	ITEM	STOCK NUMBER	FIG.	ITEM
	189K	2	2530-01-296-9333	110	8
	189L	1	5340-01-297-2800	33	6
	189M	8	6220-01-297-3217	58	9
	189N	3	2520-01-297-5200	117	8
	189P	7	6680-01-298-0498	52	12
	195D	5	5310-01-298-4686	201B	4
	195E	15		201L	14
	195F	2	5355-01-298-8571	166A	44
	195I	11		167B	44
	195J	12	2910-01-299-0473	KITS	38
	195K	9	5310-01-299-6460	228	4
	220A	3		228A	4
	221A	3	5315-01-300-3012	166A	24
	221B	1		167B	24
	221C	3	5340-01-300-3715	112	13
	48	10		118	7
	87	7	2540-01-300-8744	KITS	68
	200	20	2540-01-300-8745	KITS	67
	220	3	5340-01-301-7929	116	10
	221	1		144A	10
5340-01-286-6191	60	11	4820-01-303-3982	136	16
5306-01-286-7182	162	21	5310-01-303-4701	266O	8
5340-01-287-1979	249E	7		266P	6
5340-01-287-5825	213	3	2510-01-303-5769	52	8
	213A	4	2530-01-304-1461	136	17
2510-01-289-2233	210A	34	5315-01-304-9173	4	1
5310-01-289-5455	122	5		8	18
	123A	20	5365-01-305-7067	103	25
5315-01-289-6212	207	11	5961-01-305-8848	57	8
	207	24	3010-01-306-4113	260	25
5325-01-289-7859	70	7	4820-01-306-6838	136	15
	81	23	5330-01-306-7887	260	24
5310-01-290-2196	266I	16	5365-01-306-9955	260	9
5340-01-290-6234	101	3	2510-01-307-0152	232	39
	102	37	3040-01-307-6157	260	10
5305-01-290-8206	33	11	5305-01-309-1521	260	1
5340-01-290-8360	33	10	5640-01-309-3866	159	4
2920-01-290-9245	50	17		213	9
7690-01-291-2974	238	6		213A	10
2530-01-291-4597	122	4	5640-01-309-3867	159	1
	123A	23		213	5
5330-01-291-4615	BULK	22		213A	7
5340-01-292-5402	45	3	5640-01-309-3868	159	2
4730-01-296-9318	25	54		213	10
	250	22		213A	11

CROSS REFERENCE INDEXES
NATIONAL STOCK NUMBER

STOCK NUMBER	FIG.	ITEM
5640-01-309-3870	159	3
	213	31
	213A	30
2540-01-309-4459	35	5
2510-01-310-2324	196C	27
4730-01-311-4294	29	23
5310-01-313-3562	230	20
	230A	20
	230B	2
2540-01-314-1121	262	9
2540-01-314-1188	230	6
	230A	6
2540-01-314-1189	230	7
	230A	7
	230B	11
2540-01-314-1190	230	7
	230B	11
2540-01-314-2101	230	9
	230A	9
	230B	12
5340-01-314-4951	80	4
5340-01-314-5602	88	29
5340-01-314-5957	180	6
	201J	2
	201L	6
	201O	4
	203	9
	204A	4
	204B	10
	205	7
	205C	15
	205C	18
	209	5
	212	14
	215	21
	223	15
	223	20
	223A	5
	223A	11
	223A	17
	224	3
	227A	4
2540-01-314-9379	230	4
	230A	4
	265F	3
5330-01-315-1609	88	30
5310-01-315-3403	220	10
	220A	8
	220A	20
	221A	6
	221B	15
	221C	8
5365-01-315-3595	230	8
	230A	8
	230B	16
5340-01-315-3611	230	14
	230A	14
	230B	7
5330-01-315-7047	7	10
5305-01-315-7066	221	4
5306-01-315-7086	220	13
	221	7
	221A	8
5306-01-315-7088	200	19
	220	7
	220A	19
	221A	9
5360-01-315-7211	226	11
	227C	10
	227C	22
	249	21
5360-01-315-7212	226	11
	227C	10
	227C	22
	249	21
5340-01-315-7223	69	10
7690-01-315-8539	238	3
5305-01-315-8649	66	33
2590-01-316-0084	148	15
5306-01-316-1456	220	12
	221	8
5340-01-316-1507	230	21
4030-01-316-1551	148	12
	149	12
2910-01-316-2312	22	22
5306-01-316-2433	220	1
	221	2
	221A	2
4820-01-316-2497	24	33
2590-01-316-2581	227B	4

CROSS REFERENCE INDEXES
NATIONAL STOCK NUMBER

STOCK NUMBER	FIG.	ITEM
5340-01-316-2959	230	19
5307-01-316-2986	230	18
	230A	18
	230B	8
3040-01-317-0367	22	30
3040-01-317-0368	23	12
4820-01-317-0552	24	33
5307-01-317-6317	24	15
5935-01-317-6731	78	8
5360-01-317-8098	22	21
5360-01-317-9451	23	6
5310-01-318-1883	24	14
5365-01-318-1887	23	43
5360-01-318-1894	23	33
2990-01-320-8915	24	38
5330-01-321-8622	249	14
	BULK	28
2590-01-323-5153	123	8
5306-01-323-5534	157	21
5306-01-323-5535	166A	50
	166B	26
	167B	50
5330-01-324-0906	98	6
5977-01-324-6323	50	45
2510-01-325-8741	249	10
	249	16
5310-01-328-7657	14	7
2540-01-329-8072	227	KIT
2540-01-329-8073	227B	KIT
2540-01-329-8075	227D	KIT
5340-01-329-8582	265D	17
4730-01-329-9151	40	1
2540-01-330-6169	227B	1
2540-01-330-6171	226	4
2540-01-330-6172	227C	2
2540-01-330-6173	226	1
2510-01-330-6174	226	7
	227C	19
2510-01-330-6175	226	7
	227C	19
2510-01-330-6176	227C	5
2540-01-330-6177	227C	1
2510-01-330-6576	227C	5
5340-01-332-7515	165	8
5340-01-332-7599	232	16
5340-01-332-7602	210A	37
	212	6
5310-01-333-0060	202B	18
	266M	12
	266N	19
	70A	4
5310-01-333-5245	59	16
5305-01-333-5261	196G	20
5320-01-333-5545	156	14
	158	47
5340-01-333-5851	200	21
	220	8
4710-01-333-5995	196D	42
2530-01-333-6068	124	5
2610-01-333-7632	132	1
2530-01-333-8263	124	5
5320-01-333-9955	207B	5
5340-01-334-1422	KITS	33
5340-01-334-4241	220	15
5120-01-335-1094	299	1
5120-01-335-1096	299	1
5120-01-335-1099	299	1
5120-01-335-1100	299	1
2510-01-335-4170	158	55
2510-01-335-4171	156	5
2540-01-335-4482	158	3
2640-01-335-4583	131	10
5120-01-335-5847	299	6
2510-01-335-7363	213	7
	213A	8
4710-01-335-7523	196D	15
5331-01-335-7592	31	8
2510-01-335-7799	156	18
2590-01-336-3271	183	26
2530-01-338-3056	299	KIT
4710-01-344-2035	274D	1
	274F	2
4310-01-345-5723	299	KIT
4730-01-346-1063	131	11
	131A	12
5331-01-346-3806	131	12
	131A	13
3020-01-347-8580	103	43
5930-01-347-9216	228	12
	228A	12

CROSS REFERENCE INDEXES
NATIONAL STOCK NUMBER

STOCK NUMBER	FIG.	ITEM	STOCK NUMBER	FIG.	ITEM
5999-01-348-0302	47	18	5365-01-358-4642	105	12
5920-01-348-0303	46	13	5360-01-358-5420	105	16
3120-01-348-3364	47	19	5325-01-358-5450	102	5
3110-01-348-4867	47	9	5310-01-358-5461	102	16
5365-01-348-6971	46	15	4720-01-358-6100	103	13
5306-01-348-8310	46	5	4710-01-358-6397	249D	3
5310-01-348-8313	46	19		27	25
5310-01-348-8314	46	9	5360-01-358-6563	102	29
5310-01-348-8385	46	17	5360-01-358-6564	105	14
5310-01-348-8386	46	14	5340-01-358-6697	70	3
5310-01-348-8392	46	10	2590-01-358-7643	105	6
5310-01-348-8393	46	6	2590-01-358-7644	105	7
5310-01-348-8398	46	32	2520-01-358-7698	104	4
6115-01-349-5320	47	4	5340-01-358-7940	105	17
4140-01-350-0839	46	22	5325-01-358-7958	102	10
5975-01-350-1987	46	2	5325-01-358-7959	102	17
5310-01-350-4257	46	3	5325-01-358-7960	102	20
2510-01-350-4949	161	3	5325-01-358-7961	103	42
5970-01-350-5646	46	12	5325-01-358-7962	103	34
5310-01-350-8549	46	4	5310-01-358-7974	103	4
5306-01-351-1744	109	7	5310-01-358-7975	103	7
5355-01-353-6934	228	14	5310-01-358-7978	105	13
	228A	14	5340-01-358-8000	102	30
5330-01-355-3686	11	24	4710-01-358-8410	103	12
5325-01-357-1080	226	18	4730-01-358-8538	138B	1
	227C	33	3040-01-358-8596	105	5
5120-01-357-3629	295	16	3020-01-358-8601	103	48
5120-01-357-3630	295	17	4320-01-358-8608	103	40
5120-01-357-3631	295	18	3020-01-358-8656	103	9
5120-01-357-3632	295	12	2520-01-358-8658	103	10
5120-01-357-3633	295	15	3020-01-358-8659	103	33
2510-01-357-8789	148	7	3020-01-358-8661	103	8
	253	1	3020-01-358-8662	103	16
5120-01-357-9123	295	19	3040-01-358-8691	103	44
5180-01-357-9692	295	KIT	2520-01-358-8700	105	8
2530-01-357-9708	129	1	2520-01-358-8701	105	1
2530-01-357-9776	128	1	3040-01-358-8708	102	24
4710-01-357-9968	127	7	2520-01-358-8878	103	3
2510-01-358-1176	253	24	2520-01-358-8879	103	1
2510-01-358-1177	253	24	2520-01-358-8880	102	2
2510-01-358-1178	148	7	2520-01-358-8883	105	10
	253	1	5330-01-358-9540	101A	4
4710-01-358-1943	126	22	5330-01-358-9541	103	11
4710-01-358-2127	27	23	5331-01-358-9545	102	28
5365-01-358-4641	103	17	5305-01-359-0167	70	13

CROSS REFERENCE INDEXES
NATIONAL STOCK NUMBER

STOCK NUMBER	FIG.	ITEM	STOCK NUMBER	FIG.	ITEM
3040-01-359-1118	103	37		212	51
3020-01-359-1136	103	6		237	18
5330-01-359-1292	103	35	2530-01-361-8012	KITS	50
5315-01-359-1451	130	7	5330-01-361-8014	KITS	48
4730-01-359-2217	103	14	5330-01-361-8015	KITS	49
4730-01-359-2382	138C	11	6150-01-361-8129	70	15
3020-01-359-2529	103	47	2510-01-361-8213	158	39
6220-01-359-2870	58	10	5940-01-361-9107	236	23
4710-01-359-2956	249D	1	2920-01-363-5173	47	1
	28	6	5305-01-363-7825	23	36
5306-01-359-4529	102	1	5180-01-363-8079	302	KIT
5306-01-359-4530	103	2	2910-01-363-8782	23	31
5305-01-359-4586	102	27	2510-01-364-3120	KITS	47
3110-01-359-6669	103	5	5140-01-366-0642	302	8
3120-01-359-6764	105	15	5120-01-366-0893	302	1
5970-01-359-7836	84	13	5120-01-366-0894	302	9
2520-01-359-8444	KITS	43	5120-01-366-0895	302	5
3110-01-359-8858	103	45	5120-01-366-2520	302	2
4820-01-359-9489	126	19	5310-01-366-3539	42A	10
	126A	31	5120-01-366-4713	302	6
5306-01-360-0926	261	4	5120-01-366-6260	302	7
3130-01-360-1050	102	15	5120-01-366-9468	302	3
3130-01-360-1051	102	21	5340-01-367-2070	208	15
	103	36		208A	17
5306-01-360-1123	261	17	5120-01-367-3456	290	13
5306-01-360-1125	263	19	5120-01-367-3477	290	15
5306-01-360-1128	263	12	5120-01-367-3536	300	8
5306-01-360-1130	273	30	5120-01-367-3582	299	2
5305-01-360-1136	4	11	5120-01-367-3585	299	2
	42	15	5306-01-371-4685	157	14
	273	27	5330-01-372-0636	9	17
3120-01-360-1202	102	12	6220-01-372-3883	58	4
5340-01-360-1758	25	25	5365-01-378-1755	11	23
4720-01-360-2380	37	6	5340-01-378-5201	66	16
5330-01-360-5271	88	19	2510-01-378-5615	208	10
3120-01-360-5960	103	46		208A	12
5310-01-361-1163	63	5	5340-01-378-7525	66	17
	139	18	5330-01-378-8572	11	27
	209A	1	5330-01-378-8577	4	5
	262	7	5330-01-378-8646	KITS	8
	265	4	5330-01-379-1139	98	4
5120-01-361-3101	295	14	5310-01-380-1614	209B	5
6220-01-361-5084	64	8		209B	11
5940-01-361-5200	236	21	5331-01-380-2118	138A	14
5305-01-361-5353	207B	3	5305-01-380-3395	2	6

CROSS REFERENCE INDEXES
NATIONAL STOCK NUMBER

STOCK NUMBER	FIG.	ITEM	STOCK NUMBER	FIG.	ITEM
5340-01-380-4561	121	1	5365-01-381-6278	117	19
	123A	1	5365-01-381-6292	117	19
5365-01-380-5345	117	19	5365-01-381-6303	117	19
5365-01-380-7340	216	4	5365-01-381-6313	117	19
	217B	4	5365-01-381-6317	117	19
5305-01-380-9163	233	15	5365-01-381-6332	117	19
5330-01-381-1810	228	35	2540-01-381-8392	216	1
	228A	35	2540-01-381-8988	215	14
2540-01-381-2079	215	16	2540-01-381-9331	215	17
5340-01-381-2248	233	17	5365-01-381-9582	117	19
5305-01-381-2296	215	7	5365-01-381-9588	117	19
5305-01-381-2305	215	20	5365-01-382-0973	117	16
5365-01-381-4487	117	16	5365-01-382-1058	117	16
5365-01-381-5166	117	19	5365-01-382-1132	117	16
5365-01-381-5174	117	19	5365-01-382-1135	117	16
5310-01-381-5328	216	6	5365-01-382-1157	117	16
2540-01-381-5397	215	11	5365-01-382-1159	117	16
5365-01-381-6076	117	19	5365-01-382-1162	117	16
5365-01-381-6080	117	19	5365-01-382-1166	117	16
5365-01-381-6086	117	19	5365-01-382-1170	117	16
5365-01-381-6110	117	19	5365-01-382-1171	117	16
5365-01-381-6112	117	19	5365-01-382-1177	117	16
5365-01-381-6113	117	19	5365-01-382-1178	162	18
5365-01-381-6120	117	19		216	12
5365-01-381-6122	117	19		217B	13
5365-01-381-6145	117	19	5365-01-382-1181	117	16
5365-01-381-6151	117	19	5365-01-382-1235	117	16
5365-01-381-6154	117	19	5365-01-382-1240	117	16
5365-01-381-6158	117	19	5365-01-382-1273	117	16
5365-01-381-6164	117	19	5365-01-382-3447	117	16
5365-01-381-6165	117	19	5365-01-382-3676	117	16
5365-01-381-6174	117	19	5365-01-382-3693	117	16
5365-01-381-6175	117	19	5365-01-382-3694	117	16
5365-01-381-6188	117	19	5365-01-382-3700	117	16
5365-01-381-6197	117	19	5365-01-382-3710	117	16
5365-01-381-6210	117	19	5365-01-382-3715	117	16
5365-01-381-6211	117	19	5365-01-382-3718	117	16
5365-01-381-6223	117	19	5365-01-382-3726	117	16
5365-01-381-6226	117	19	3120-01-382-4194	46	16
5365-01-381-6229	117	19	5310-01-382-5031	113	26
5365-01-381-6240	117	19		119	26
5365-01-381-6250	117	19	7690-01-382-8471	238	14
5365-01-381-6258	117	19	5340-01-383-0462	33	4
5365-01-381-6261	117	19	2540-01-383-5232	213	2
5365-01-381-6276	117	19	2510-01-383-5444	70	6

CROSS REFERENCE INDEXES
NATIONAL STOCK NUMBER

STOCK NUMBER	FIG.	ITEM	STOCK NUMBER	FIG.	ITEM
2540-01-383-5660	215	22		126A	20
2990-01-383-5689	250	11		127	10
2530-01-383-5740	133	10		127A	4
6160-01-384-0325	216	2		99A	2
	217B	2	5305-01-393-7801	265	10
2540-01-384-1012	213	22	3120-01-393-9361	168	15
2540-01-384-1028	213	23	5340-01-394-2408	123	15
5935-01-384-2610	69	1	5325-01-394-2414	54	7
6160-01-384-3922	216	3		169	6
	217B	3		172	1
2530-01-384-7154	133	14		180	8
5340-01-384-9987	11	18		183	17
5310-01-385-7083	250	12		184	3
2540-01-385-9000	228	33		185	2
	228A	33		186	2
2540-01-385-9031	228	39		188	2
	228A	39		189	4
2930-01-385-9108	233	20		190	10
2540-01-386-8790	228	34		192	14
	228A	34		201	14
5340-01-387-0090	215	1		206	12
5180-01-387-5455	299	KIT		219	8
3120-01-388-1527	228	8		223	17
	228A	8		269A	4
5325-01-388-2363	253	11	4720-01-394-3747	140	16
5365-01-388-4449	117	16	4730-01-394-8129	249A	29
5310-01-388-6205	25	46	2590-01-394-8134	116	3
5340-01-388-9512	KITS	74	4730-01-394-8345	44A	21
5340-01-389-2417	109	8	5340-01-394-8496	123	15
5180-01-389-7560	299	KIT	2590-01-394-9672	220	4
5180-01-389-7561	296	KIT	5325-01-395-1247	193	17
5310-01-389-9681	201K	39		194	14
	201L	37		195	8
5120-01-391-5131	295	9		288	8
5331-01-392-0830	69	15		70A	3
5331-01-392-1793	69	11	2590-01-395-2228	111	3
2520-01-392-8435	91	11	2590-01-395-2229	111	6
	92	17	2540-01-395-7999	149	4
5305-01-393-6311	117G	12	5310-01-395-8747	14	5
	117H	11		273A	7
	29	2		39	9
	39A	4		39A	10
	44A	23		72	4
	99	2	2540-01-395-8785	249	1
	126	35	2590-01-396-1422	218	1

CROSS REFERENCE INDEXES
NATIONAL STOCK NUMBER

STOCK NUMBER	FIG.	ITEM
2590-01-396-1424	218	1
5935-01-396-3991	69	14
5310-01-396-8392	207A	11
5330-01-397-0374	88	16
5935-01-397-3813	69	5
5305-01-397-6850	3	6
	20	7
	26	4
2920-01-397-7094	96	11
5310-01-398-0319	12	1
	12A	27
5330-01-398-3724	KITS	19
5330-01-398-3727	KITS	10
5330-01-398-3777	9	7
2520-01-398-4589	88	17
5315-01-398-6610	201H	9
4330-01-398-8484	13	7
2815-01-398-8487	7	13
4730-01-399-0241	140	17
2815-01-399-1020	6	1
2990-01-399-1023	88	11
2910-01-399-1848	18	1
4370-01-399-4206	117H	3
2540-01-399-4692	227	KIT
5342-01-406-6962	155	12
5340-01-406-6964	263	13
5340-01-406-6965	263	8
5340-01-406-7418	263	6
5310-01-406-9129	69	16
2510-01-407-6036	226	7
	227C	19
2510-01-407-6037	226	7
	227C	19
5320-01-407-6239	156	9
5340-01-407-7192	263	17
5305-01-407-7713	227A	9
	264	20
5305-01-407-9005	221C	10
2540-01-407-9241	226	4
5307-01-408-4029	42	20
	273	16
5340-01-408-5851	28	29
5340-01-408-6456	230	21
5340-01-408-6458	203	6
5340-01-408-6460	230	19
5340-01-408-6462	203	5
5310-01-408-6466	249D	8
5180-01-408-7050	301	KIT
5120-01-408-7051	300	21
6220-01-408-7785	54	1
5325-01-408-7969	94	11
5325-01-408-7970	94	16
5325-01-408-7971	94	8
5325-01-408-7972	94	10
5325-01-408-7973	97	2
5360-01-408-7977	98	15
5315-01-408-8020	89	8
5120-01-408-8173	301	12
5325-01-408-8466	189A	6
	189B	23
5340-01-408-8508	171	13
5340-01-408-8522	94	25
5340-01-408-8523	149	15
5340-01-408-8525	KITS	27
5340-01-408-8529	149	15
5310-01-408-9593	101	7
	101A	6
5325-01-409-0211	141	11
	201K	8
4730-01-409-1204	100	21
	100A	18
	138A	28
	139	10
4820-01-409-1218	96	24
5315-01-409-1662	267	22
5330-01-409-1665	98	30
2520-01-409-1751	94	9
2520-01-409-1758	94	18
2520-01-409-1767	94	19
5330-01-409-1981	28	34
	BULK	25
4720-01-409-2499	100	11
	100A	28
3040-01-409-2500	85	9
3040-01-409-2501	106	4
3040-01-409-2502	85	3
4710-01-409-2504	100	4
4720-01-409-2506	100	7
	100A	6
4710-01-409-2508	100	3

CROSS REFERENCE INDEXES
NATIONAL STOCK NUMBER

STOCK NUMBER	FIG.	ITEM
2520-01-409-2509	97	1
2520-01-409-2512	101	2
5340-01-410-7036	263	KIT
2510-01-410-7169	158	27
5330-01-410-7229	KITS	17
3040-01-410-8054	85	5
2520-01-410-8067	KITS	87
3040-01-410-8068	90	13
3040-01-410-8071	90	22
2520-01-410-8077	KITS	89
2520-01-410-8078	92	2
2520-01-410-8079	94	5
5305-01-410-8158	41	10
5306-01-410-8159	3	7
6150-01-410-8215	301	11
5120-01-410-8216	300	4
2520-01-410-8241	94	27
5305-01-410-8386	200F	14
	203	10
	205	8
	205A	9
	209	4
5180-01-410-8467	301	KIT
2540-01-410-8789	55	3
2540-01-410-8793	234	4
2540-01-410-8794	230A	7
3040-01-410-9965	85	8
2590-01-410-9968	156	2
5325-01-411-0066	180	5
	203	8
	204B	29
	205	6
	205A	7
	209	6
	210A	26
	212	47
2510-01-411-0652	210A	25
	212	46
5306-01-411-1596	98	1
2910-01-411-2124	28	1
2540-01-411-2130	230	4
	230A	4
	265F	3
2815-01-411-2138	4	8
5307-01-411-2336	87	3
5306-01-411-2338	266C	6
	28	27
5306-01-411-2339	28	28
5306-01-411-2342	85	7
2990-01-411-2728	35	1
2530-01-411-2729	133	7
2530-01-411-2735	133	9
2510-01-411-2736	158	26
2520-01-411-2749	91	12
4330-01-411-2786	96	19
5310-01-411-3422	189J	6
	207A	24
	207B	44
	213A	28
	29	26
5210-01-411-3422	183	16
5310-01-411-3422	204A	14
	204B	24
5210-01-411-3422	223	17
5310-01-411-3422	228A	41
	234	1
5210-01-411-3422	235A	6
2540-01-411-3946	130	10
2990-01-411-3947	35	18
2520-01-411-3959	94	21
2815-01-411-3964	4	6
2815-01-411-3965	7	13
5305-01-411-4455	263	16
3120-01-411-5783	98	31
3110-01-411-5784	94	15
3120-01-411-5787	98	31
2520-01-411-6540	96	14
2990-01-411-6556	9	14
3990-01-411-6575	203	7
2540-01-411-7519	263	10
2990-01-411-7898	9	8
4710-01-411-8488	21	15
4710-01-411-8489	21	13
4710-01-411-8492	21	14
2910-01-412-0047	28	31
4710-01-412-0273	27	1
3110-01-412-0490	94	3
3010-01-412-0673	102	19
5340-01-412-0867	127	6
	99A	9

CROSS REFERENCE INDEXES
NATIONAL STOCK NUMBER

STOCK NUMBER	FIG.	ITEM
2540-01-412-0929	227D	KIT
4710-01-412-1667	21	17
4710-01-412-1669	21	11
2540-01-412-2661	227C	1
5340-01-412-3563	88	28
5310-01-412-4013	103A	8
	106	2
	114	5
	120	5
	123A	8
	126A	21
	127A	3
	128A	11
	12A	14
	138B	2
	143A	2
	150A	10
	162	2
	163	37
	164	22
	166B	29
	167F	7
	167G	6
	167H	4
	167I	23
	167T	17
	167T	45
	167U	2
	169J	43
	189A	5
	189B	3
	189C	3
	189D	3
	189I	8
	189J	3
	189K	3
	189L	6
	189Q	2
	196G	31
	200A	2
	200B	9
	200C	4
	200D	11
	200E	11
	200E	26
	200F	24
	200G	1
	200H	3
	200H	14
	201D	4
	201F	2
	201G	18
	201I	5
	201J	12
	201M	2
	202A	10
	202B	4
	202C	2
	202D	3
	204	18
	206	15
	225A	12
	232	28
	235	13
	235A	13
	266B	2
	266L	13
	273A	3
	28	25
	35	7
	35	35
	36	6
	38A	10
	39	4
	250	15
	253	22
	265	7
	266C	2
	39A	5
	42A	15
	42B	3
	44A	26
	45	11
	45A	2
	48	8
	87	14
2510-01-412-4969	141	13
	141A	21
4730-01-412-5213	27	21
	31	23

CROSS REFERENCE INDEXES
NATIONAL STOCK NUMBER

STOCK NUMBER	FIG.	ITEM	STOCK NUMBER	FIG.	ITEM
4730-01-412-5216	27	8		102	31
5305-01-412-5994	114	11	3040-01-413-4022	103	15
5305-01-412-5995	266C	5	5340-01-413-4486	88	25
6220-01-412-6420	83	5	2520-01-413-5540	91	8
2815-01-412-6760	6	1	3120-01-413-6106	46	23
2510-01-412-6761	227C	5	5360-01-413-7363	22	29
5340-01-412-7514	149	9	5325-01-413-7364	23	14
2590-01-412-7564	148	18	5360-01-413-7368	23	40
6150-01-412-7774	301	10	6150-01-413-7946	67	1
2815-01-412-8161	6	2	2510-01-413-8045	143	14
2815-01-412-8162	6	2	3110-01-413-8094	102	6
2540-01-412-8610	148	8	4710-01-413-8230	127	3
	256	4	2510-01-413-8872	227C	5
4710-01-412-8611	21	10	2530-01-413-8886	KITS	52
4710-01-412-8615	21	20	6220-01-413-9828	83	6
5325-01-412-8806	94	12	5340-01-414-0247	24	28
5935-01-412-9146	71	9	2910-01-414-0346	23	29
2590-01-412-9560	148	18	5340-01-414-0701	68	1
2520-01-413-0080	108	15	5340-01-414-1454	227B	5
5365-01-413-0275	208	23		227C	3
	208	37	5120-01-414-1849	301	13
	208A	25	5365-01-414-2895	113	31
5340-01-413-0282	148	16		119	31
5945-01-413-0886	282A	3	5365-01-414-2902	113	23
	56	14		119	23
2540-01-413-1356	227C	2	5305-01-414-3012	23	45
4710-01-413-1360	27	5	5331-01-414-4161	94	22
2530-01-413-1365	114	6	2910-01-414-5382	24	25
2530-01-413-1366	114	8	5330-01-414-6607	98	2
5340-01-413-1776	9	4	2910-01-414-6651	23	42
2520-01-413-1899	102	13	2530-01-414-7844	114	6
2520-01-413-1900	102	9	2510-01-414-7846	210A	4
2520-01-413-1902	102	18	2910-01-414-7888	23	42
2520-01-413-1904	103	29	5935-01-415-4322	71	18
5310-01-413-2049	130	9	5935-01-415-4392	71	17
5330-01-413-2118	88	27	5310-01-415-5245	71	19
2520-01-413-2595	83	1	5340-01-415-8672	203	2
5340-01-413-2689	35	16	5330-01-415-9612	103	20
5310-01-413-3276	201O	10	5330-01-415-9613	103	30
	210A	16	5340-01-415-9627	24	24
	212	32	5340-01-415-9628	24	24
2510-01-413-3360	212	12	5340-01-415-9633	24	16
2530-01-413-3653	113	1	6680-01-416-0636	252	4
	119	1	5305-01-416-1269	103	27
5330-01-413-3713	101A	15	5310-01-416-3009	103	28

CROSS REFERENCE INDEXES
NATIONAL STOCK NUMBER

STOCK NUMBER	FIG.	ITEM	STOCK NUMBER	FIG.	ITEM
2520-01-416-5217	111	4		265J	14
	116	4		265K	3
5310-01-416-5447	85	6		269A	12
5331-01-417-1043	131	4		276C	5
	131A	4		286	15
5306-01-417-2467	131	3	5325-01-417-7789	169	7
	131A	3	5365-01-417-7792	183	3
2530-01-417-4908	131	2		189G	18
5340-01-417-6474	167	16	3120-01-417-8084	KITS	11
	167C	2	3120-01-417-8178	103	31
	167O	11	2530-01-417-8450	131	6
	210	16	5340-01-417-8995	167N	5
5340-01-417-6475	219	11		167P	2
5340-01-417-6480	219	11		169B	8
5310-01-417-7273	167	5		169E	7
	167A	5		169F	2
	167D	6		169G	6
	167M	7		171	4
	167P	15		188D	4
	169C	5		188L	4
	169E	2		188M	2
	189G	26		195A	3
	192	22		210	13
	193	22	5340-01-417-8996	170	18
	194	9	5310-01-417-9042	181	15
	195	14		249F	4
	196E	16	2540-01-417-9362	167E	2
	196F	2	5365-01-417-9849	170	6
	197A	28	5310-01-417-9942	167	29
	205	36		167A	26
	265B	6		167E	15
	265C	3		167M	2
	265H	11		167Q	2
	266D	5		168	5
5310-01-417-7333	167	7		169C	2
	167A	7		169E	9
	168	8		169G	2
	169	17		169H	4
	169F	17		217	8
	25	27		249F	5
	170	26		266F	10
	196	24	2540-01-417-9981	170	8
	200D	3	2540-01-418-0027	167M	15
	204	25		230	19
	207	32		230	21

CROSS REFERENCE INDEXES
NATIONAL STOCK NUMBER

STOCK NUMBER	FIG.	ITEM
7690-01-418-1640	238	21
2510-01-418-1924	167A	19
2540-01-418-4070	230	19
	230	21
6220-01-418-4404	61	1
2540-01-418-6825	169E	25
	170	20
3040-01-418-9500	170	17
2540-01-419-0486	167E	2
5340-01-419-1255	181	16
5340-01-419-1275	167A	16
5340-01-419-1331	169E	11
2540-01-419-1595	33	22
5340-01-419-2314	169	26
5310-01-419-2413	167	32
	167A	29
	167D	5
	167E	22
	173	11
	176	8
	177	3
	182	15
	183	6
	188A	4
	188B	7
	188G	3
	188H	3
	188J	8
	188K	8
	188N	7
	189G	19
	196E	13
	197	10
	197A	26
	198	21
	198A	2
	200	2
	201	15
	202	6
	249J	6
	265B	12
	265G	10
	265H	3
	275	9
5340-01-419-3312	169	14
5310-01-419-3336	169	27
5330-01-419-4425	168	7
5310-01-419-4436	168	14
	187	2
5310-01-419-5091	273	21
	273A	20
5340-01-419-5185	169	30
5340-01-419-5186	210	12
5340-01-419-5187	210	12
5340-01-419-5188	167D	20
	170	13
	196	22
	197	19
	197A	2
	200E	2
5340-01-419-5189	187	3
5340-01-419-5190	187	3
2640-01-419-6200	131	15
	131A	15
2640-01-419-6202	131	5
	131A	5
2640-01-419-6205	KITS	51
2540-01-419-6298	211	2
2540-01-419-6300	210	2
2540-01-419-7051	170	22
5331-01-419-7754	274	3
	276A	1
	279A	1
	285	6
5331-01-419-7755	276A	2
	279A	7
5360-01-419-7933	260	28
5340-01-419-9075	260	33
3120-01-419-9184	169E	27
5310-01-420-0054	201K	28
3040-01-420-0465	260	3
5360-01-420-0480	260	8
5331-01-420-1795	285	7
2530-01-420-1883	186	7
2510-01-420-1884	210	1
3040-01-420-1887	103	18
3120-01-420-2257	169E	10
5325-01-420-3005	185	13
	205	34
	207	36

CROSS REFERENCE INDEXES
NATIONAL STOCK NUMBER

STOCK NUMBER	FIG.	ITEM	STOCK NUMBER	FIG.	ITEM
	224	4	2920-01-420-7894	42	14
2510-01-420-3026	167A	19		273	29
2540-01-420-3822	185	1	2530-01-420-7895	114	19
2540-01-420-3823	184	1	2540-01-420-7902	275	5
2540-01-420-3824	184	4	2540-01-420-7906	275	4
4710-01-420-3832	284	16	4130-01-420-8306	273	10
2530-01-420-3837	134	5		273A	2
2530-01-420-3839	134	2	4130-01-420-8312	285	1
5310-01-420-4522	273	22		286	12
	273A	21	2930-01-420-8622	43	1
4730-01-420-4992	284	15	2530-01-420-8634	114	19
2530-01-420-5180	134	6	5340-01-420-8714	210	9
4710-01-420-5181	285	5	5310-01-420-8727	274	7
5340-01-420-5373	275	13	5340-01-420-8730	192	5
5340-01-420-5376	274	5		193	2
5340-01-420-5377	275	6	2920-01-420-9968	46	1
5306-01-420-6034	273	19	5340-01-421-0460	283	4
	273A	18		286	7
	276B	4	5340-01-421-0461	286	10
5306-01-420-6039	216	17	5340-01-421-1782	166B	33
	217	7	5945-01-421-1784	283	2
5306-01-420-6635	167E	6	5945-01-421-1785	283	8
	174	14	2530-01-421-2563	134	9
	188G	12	6685-01-421-3549	284	7
	188L	3	6150-01-421-3550	275	1
	188M	6	5331-01-421-4960	285	2
	195A	1	5330-01-421-4967	BULK	46
	201A	4		BULK	47
	201C	2	2590-01-421-6754	286	9
	265G	5	2590-01-421-8480	223	12
5305-01-420-6637	167Q	1		223A	8
	169H	10	5180-01-422-0138	300	11
	171	10	5120-01-422-0139	300	14
	185	3	5120-01-422-0173	300	12
	187	5	5120-01-422-0219	300	13
	210	19	2540-01-422-0253	228	1
	265J	9		228A	1
	266F	11	5120-01-422-0334	300	9
5305-01-420-6769	284	8	5320-01-422-1224	286	5
	286	8	5120-01-422-1293	301	6
5305-01-420-6770	281	3	5180-01-422-1294	301	1
5930-01-420-7197	275	2	5120-01-422-1297	301	2
3040-01-420-7875	169	26	5120-01-422-1300	300	5
2530-01-420-7892	120	6	5120-01-422-1301	301	5
2530-01-420-7893	120	6	5120-01-422-1302	301	3

CROSS REFERENCE INDEXES
NATIONAL STOCK NUMBER

STOCK NUMBER	FIG.	ITEM	STOCK NUMBER	FIG.	ITEM
5120-01-422-1306	301	4	5305-01-428-2938	167Q	11
5120-01-422-1308	300	6		188F	5
5120-01-422-1310	300	16	5999-01-428-6813	288	11
5120-01-422-1313	300	3	5305-01-428-9197	210	17
5120-01-422-1318	300	19	2590-01-429-3007	264	KIT
5120-01-422-1324	300	20	6220-01-429-4596	52	13
5120-01-422-1326	300	7	3010-01-429-5333	260	40
5120-01-422-1329	300	10	5305-01-429-9149	45	1
5320-01-422-1712	286	2	5340-01-430-0037	260	47
5310-01-422-2147	249B	12	5925-01-430-2318	225F	6
2990-01-422-2826	35	33		229	4
5340-01-422-4255	169	11		249B	5
5120-01-422-5406	300	17		252H	3
5120-01-422-5411	300	18		53	3
4820-01-422-5523	285	3	2815-01-430-2599	11	22
5306-01-422-8649	63	9	5940-01-430-2764	56	6
5310-01-422-9287	167	28	4820-01-430-4132	27	9
	167A	25	5305-01-430-7397	196	18
	167E	14		200D	5
	169H	5		235	8
	188D	2	5306-01-430-7399	167M	9
	188F	2		167N	3
	188G	10		169B	6
	188N	4		169C	7
	192	10		169E	5
	193	6		185	7
	200	34		188C	7
	208A	4		192	9
	210	6		195A	7
	265J	3		201A	9
	266E	4		201C	4
3040-01-422-9390	114	16		249G	5
	120	16		249I	8
5120-01-423-0032	300	2		249J	1
2530-01-423-1796	135	1		265G	4
2510-01-423-2877	154	3		266D	7
2540-01-423-3199	130	10		269A	9
2520-01-423-5120	108	6		276C	8
2520-01-424-0425	109	1		279	8
3020-01-425-5380	8	8		282A	1
2990-01-426-4425	63	8	5305-01-430-7406	167	9
4010-01-426-4536	260	43		167A	9
4030-01-426-4537	260	45		167E	16
5365-01-426-6643	260	27		168	10
2930-01-426-7711	37	2	5340-01-430-9239	227D	25

CROSS REFERENCE INDEXES
NATIONAL STOCK NUMBER

STOCK NUMBER	FIG.	ITEM	STOCK NUMBER	FIG.	ITEM
5340-01-430-9240	227D	25		273	26
4720-01-431-0721	BULK	10	6150-01-432-8489	75	1
2540-01-431-1338	KITS	53	5340-01-432-8591	167A	10
4820-01-431-2499	31	10	5340-01-432-8592	167A	10
5962-01-431-5121	56	8	5340-01-432-8594	167	10
5945-01-431-5195	260	42	5340-01-432-8678	144	17
2930-01-431-5459	286	19	5340-01-432-8680	111	9
5935-01-431-5656	260	50		143A	24
3120-01-432-1474	228	7	5340-01-432-8681	126	41
	228A	7		127	19
3020-01-432-2553	113	10	4710-01-432-9470	10	2
	119	10	2540-01-432-9894	146	8
2510-01-432-3338	160	1		147	8
2520-01-432-3492	117	10	2510-01-432-9896	141	4
6150-01-432-3582	76	1	2540-01-432-9899	146	11
5340-01-432-4426	219	9	5340-01-433-0931	63	7
5340-01-432-4471	25	34	5342-01-433-0932	14	8
5360-01-432-4721	151	1	5340-01-433-0936	235	5
5340-01-432-4869	143	10	5310-01-433-0938	235	15
5340-01-432-4870	146	5	5310-01-433-0940	168	17
5340-01-432-4875	141	16	5310-01-433-0941	167	25
5340-01-432-4876	143	12		167A	22
5340-01-432-4877	143	13		167E	4
	144	18		167M	10
5340-01-432-4878	142	16		167N	4
5340-01-432-4879	164	17		167P	9
	164A	16		169	2
5340-01-432-4881	38	4		169B	7
5340-01-432-4882	72	25		169C	13
2510-01-432-5134	142	1		169E	6
3990-01-432-5370	158	19		169F	3
	182	13		169H	11
	183	11		189G	36
	207A	15		195A	2
	207B	33		265J	11
5310-01-432-6727	123	14		266D	8
	123A	5	6150-01-433-1568	71	1
	157	10	7690-01-433-1610	244	6
	213	27	2540-01-433-2545	142	13
	213A	31	2990-01-433-2546	17	8
	227D	15	2930-01-433-2547	38	3
	266	10	2930-01-433-2550	12	12
6680-01-432-6884	87	10	5340-01-433-2721	147	5
5306-01-432-7900	42	12	5340-01-433-2732	141	5
	273	25	5340-01-433-2733	142	16

CROSS REFERENCE INDEXES
NATIONAL STOCK NUMBER

STOCK NUMBER	FIG.	ITEM
5340-01-433-2735	141	19
5342-01-433-2737	273	13
5340-01-433-2746	142	14
5930-01-433-3142	63	6
5365-01-433-3728	178	4
5365-01-433-3729	178	3
5365-01-433-3989	200	26
2590-01-433-4219	29	22
2510-01-433-4421	144	12
	144A	11
2990-01-433-4422	35	25
5340-01-433-4750	24	24
5340-01-433-4752	24	24
5330-01-433-5054	163	5
	163A	2
	164	6
	164A	6
5340-01-433-6115	181	14
5340-01-433-6116	235	5
5340-01-433-6117	235	5
3040-01-433-6207	168	20
3040-01-433-6212	168	18
3040-01-433-6215	168	18
5340-01-433-6262	157	15
5365-01-433-6267	273	11
5310-01-433-6377	192	17
	193	13
3040-01-433-6556	168	20
6150-01-433-7000	236	20
5340-01-433-7907	162	11
2530-01-433-8003	113	35
	119	19
2540-01-433-8132	211	3
2540-01-433-8133	211	3
4720-01-433-8266	40	7
5315-01-433-8419	169E	21
	170	21
5340-01-433-8421	219	2
5340-01-433-8422	185	14
5340-01-433-8424	200	33
5340-01-433-8425	200	31
5340-01-433-8426	185	11
5340-01-433-8428	200	33
5340-01-433-8442	192	15
	193	15
5340-01-433-8444	192	18
	193	12
	194	2
	195	5
2510-01-433-8551	266	KIT
9905-01-433-8555	239	3
2530-01-433-8702	113	19
	119	35
5306-01-433-9180	167E	5
	169E	24
	196E	4
5306-01-433-9181	265J	12
5306-01-433-9183	167M	1
	169E	29
	169H	15
	169I	11
	171	9
	188G	9
	200	30
	249F	8
	266E	1
5306-01-433-9185	160	30
	188A	1
	188B	4
	188D	5
	188E	4
	197A	9
5306-01-433-9186	188C	4
	188E	3
	188L	5
	188M	5
	249I	7
5306-01-433-9187	167P	1
	169F	4
	188	13
	188G	7
	188M	7
	189	11
	249G	7
5306-01-433-9188	188A	8
	188B	6
	188H	5
	196E	11

CROSS REFERENCE INDEXES
NATIONAL STOCK NUMBER

STOCK NUMBER	FIG.	ITEM	STOCK NUMBER	FIG.	ITEM
	210	18	5305-01-434-0832	197	22
5306-01-433-9189	167	13		197A	23
	167A	15		200	18
5306-01-433-9190	210	14		200D	8
5306-01-433-9196	167O	7		219	16
	167Q	14	5365-01-434-0853	199	6
	196E	15	5365-01-434-0854	198	7
	196F	11	5365-01-434-0855	197	12
5306-01-433-9197	169E	1	5365-01-434-0856	182	14
	190	7		183	25
	191	4	5340-01-434-1375	202	13
	196F	19	5310-01-434-1377	183	19
	198A	3	5310-01-434-1385	167	3
	249J	7		167A	3
	265C	5		168	9
	265G	9		169	18
	266D	1		169F	16
5306-01-433-9198	167M	6		170	25
	169C	4		197A	22
	188D	9		200D	4
	195	12		207	31
	196F	33		265J	15
5306-01-433-9213	169G	1		265K	2
	188I	3		286	16
5306-01-433-9214	219	10	6105-01-434-1729	260	52
5305-01-433-9254	275	14	5340-01-434-1809	196G	19
5305-01-433-9255	196	21		197A	3
	197A	4		198	2
5306-01-433-9257	168	19		200E	13
5305-01-433-9258	167D	2		200F	15
	170	14		205	33
5305-01-433-9259	170	5		222	2
5340-01-433-9279	235	4		223	6
5340-01-433-9281	183	23		223	11
	189G	34		224	9
5365-01-434-0104	183	2		279	4
	189G	20	5305-01-434-2820	196	14
5365-01-434-0105	182	6	5340-01-434-2832	146	7
5365-01-434-0107	182	3	5340-01-434-2834	163	33
5365-01-434-0186	260	30		163A	35
3040-01-434-0720	168	13	4320-01-434-2835	165	32
5320-01-434-0758	197	18	5330-01-434-2837	197	4
5305-01-434-0831	265K	1	5330-01-434-2838	198	11
	269A	11	5340-01-434-2839	197	17
	276C	6	5340-01-434-2840	196	3

CROSS REFERENCE INDEXES
NATIONAL STOCK NUMBER

STOCK NUMBER	FIG.	ITEM	STOCK NUMBER	FIG.	ITEM
5340-01-434-2841	171	2	2540-01-434-5244	181	12
5340-01-434-2842	180	11	2510-01-434-5245	200	6
5340-01-434-2843	209	2	2590-01-434-5246	211	4
5340-01-434-2844	196	20	6110-01-434-5562	260	51
	197A	5	2510-01-434-6103	165	17
5340-01-434-2845	200	29	2590-01-434-6177	213	25
5340-01-434-2851	256	10	2590-01-434-6180	213	6
5330-01-434-2852	192	12		269A	2
	193	9	2510-01-434-6191	207	1
	194	3	2540-01-434-6619	170	4
	195	3	2540-01-434-6620	170	4
5340-01-434-2861	179	9	2540-01-434-6622	195	7
5340-01-434-2863	198	6	2540-01-434-6623	180	9
5340-01-434-2864	197A	17	2540-01-434-6624	182	7
	198	22	2540-01-434-6625	193	7
	199	4	2510-01-434-6626	202	1
	200B	11	4710-01-434-6627	183	5
	200C	7	2510-01-434-7238	162	16
	200F	26	5305-01-434-7258	167D	22
5340-01-434-2869	197	6		170	11
5340-01-434-2870	197	6	5310-01-434-7259	196	11
4710-01-434-3037	126	34	5306-01-434-7261	197	14
4710-01-434-3151	126	27	5306-01-434-7263	198	25
	127	20	5340-01-434-8109	126	32
4710-01-434-3159	127	21		127	24
5306-01-434-3282	171	17	5340-01-434-8111	165	24
5306-01-434-3284	196E	12	5340-01-434-8113	165	25
	197	8	2910-01-434-8597	20	2
5305-01-434-3286	204	26	2540-01-434-8598	227D	KIT
3040-01-434-3901	196	8	2540-01-434-8600	227	KIT
2540-01-434-3995	186	1	2540-01-434-8602	227B	KIT
2540-01-434-5149	170	4	5330-01-434-8611	39	2
2540-01-434-5150	170	4		39A	2
2590-01-434-5151	182	6	5340-01-434-8632	196	6
2590-01-434-5152	182	3	5340-01-434-8634	199	3
2590-01-434-5153	25	28	2510-01-434-9330	167	6
2590-01-434-5234	198	23		167A	6
2540-01-434-5235	192	11	2540-01-434-9380	169	20
2540-01-434-5236	193	3	2540-01-434-9382	169	20
2540-01-434-5237	192	6	2540-01-434-9532	169	20
2590-01-434-5239	181	6	2540-01-434-9639	169	20
2590-01-434-5240	181	7	2590-01-435-0078	167	10
2590-01-434-5241	181	2	2540-01-435-0082	181	8
2540-01-434-5242	181	9	4210-01-435-0289	209	10
2540-01-434-5243	183	4	2540-01-435-0455	188	15

CROSS REFERENCE INDEXES
NATIONAL STOCK NUMBER

STOCK NUMBER	FIG.	ITEM
2540-01-435-0462	202	9
2540-01-435-0464	202	9
2540-01-435-0466	180	4
2540-01-435-0469	198	13
2540-01-435-0470	182	2
2540-01-435-0473	196	10
2540-01-435-0570	189	10
2540-01-435-0573	188	16
2540-01-435-0578	181	17
2540-01-435-0579	201	11
2540-01-435-0981	189	7
2540-01-435-0984	182	2
3950-01-435-1014	260	34
2540-01-435-1054	172	3
2540-01-435-1058	171	18
	188L	2
2540-01-435-1061	188	10
2540-01-435-1306	169	10
2510-01-435-1323	198	1
2540-01-435-1329	169	10
2590-01-435-1331	197	11
2590-01-435-1337	197	1
3040-01-435-1358	168	3
3040-01-435-1374	168	3
3950-01-435-1632	260	39
2815-01-435-1707	3	1
3120-01-435-2495	260	37
3120-01-435-2560	260	41
5340-01-435-2844	183	4
5340-01-435-2845	209	15
5342-01-435-3787	169	13
5342-01-435-3788	169	13
5340-01-435-3789	169	16
5340-01-435-3790	169	23
5340-01-435-3791	169	23
5340-01-435-3792	168	11
5340-01-435-3805	198	19
5340-01-435-3806	182	11
5895-01-435-3947	63	3
5330-01-435-4752	168	12
5330-01-435-4753	168	4
9905-01-435-5173	238	19
2540-01-435-6299	180	1
2540-01-435-6303	180	1
2540-01-435-6307	192	8
2540-01-435-6485	193	19
2540-01-435-6487	192	1
2540-01-435-7211	189	9
2540-01-435-7696	179	1
2540-01-435-7697	191	3
2540-01-435-7698	185	4
5310-01-435-7784	167	26
	167A	23
	167E	3
	167M	11
	169C	8
	170	28
	181	4
	182	10
	188	4
	188A	2
	188B	2
	188C	5
	188E	2
	188G	13
	188H	9
	188I	5
	188J	2
	188K	2
	188M	8
	189	2
	192	4
	193	4
	196E	5
	197A	10
	201A	2
	201C	3
	206	10
	207	8
	210	21
	225G	8
	249G	4
	249I	10
	249J	3
	265J	10
	269A	8
	274	9
	275	11
	279	7
	282A	2

CROSS REFERENCE INDEXES
NATIONAL STOCK NUMBER

STOCK NUMBER	FIG.	ITEM
	283	12
	284	4
5310-01-435-7791	174	10
	183	24
	189G	23
	194	12
	195	11
5365-01-435-8425	169	5
5330-01-435-9113	168	12
2510-01-435-9689	167	1
2510-01-435-9690	211	7
2510-01-435-9691	167A	1
2510-01-435-9692	170	15
2510-01-435-9693	211	7
2510-01-435-9694	167	1
2510-01-435-9695	167A	1
2540-01-436-0720	190	1
2540-01-436-0770	179	1
2510-01-436-0772	167	19
	167C	10
2510-01-436-0773	167	19
	167C	10
3040-01-436-0894	169	25
3040-01-436-0897	169	25
5365-01-436-1230	173	16
	174	4
	175	15
	176	4
	195B	3
	195C	9
5365-01-436-1232	179	8
5365-01-436-1233	194	10
	195	10
5365-01-436-1234	173	18
	174	6
	175	14
	176	6
	195	20
	195B	4
	195C	8
5365-01-436-2533	176	10
5365-01-436-2535	176	3
5310-01-436-3741	167M	3
	167Q	3
	169C	3
	169D	10
	169E	12
	169G	3
	169H	8
	169I	10
	188N	12
	188O	5
	266F	9
5310-01-436-3742	167	20
	167M	8
	167O	4
	167Q	13
	169C	6
	169D	5
	169E	3
	173	13
	182	20
	183	9
	188D	10
	188N	2
	188O	2
	190	3
	191	1
	192	21
	193	23
	194	7
	195	13
	196F	3
	198	17
	265B	5
	265C	4
2540-01-436-4175	215	2
	216	1
	217	1
	217A	1
2540-01-436-4236	186	6
	228	23
5325-01-436-4285	204A	15
5340-01-436-4349	183	16
5340-01-436-4350	179	6
5340-01-436-4351	183	13
	276C	9
5340-01-436-4352	188	12
	189	13
5340-01-436-4353	192	20

CROSS REFERENCE INDEXES
NATIONAL STOCK NUMBER

STOCK NUMBER	FIG.	ITEM
	193	10
5340-01-436-4363	197	21
	197A	21
	200D	7
5306-01-436-5392	169G	5
	188I	6
	195A	8
	206	8
	225G	7
5306-01-436-5393	167	4
	167A	4
	167P	16
5305-01-436-5402	169	19
5305-01-436-5414	169	1
	249G	14
5306-01-436-5429	167E	19
	169	29
5320-01-436-5552	183	18
	197A	30
	198	10
	198A	8
5330-01-436-5553	BULK	26
5310-01-436-5685	171	5
5305-01-436-6375	188N	1
	188O	3
5305-01-436-6376	167Q	15
	188H	7
5305-01-436-6377	167D	7
	169E	18
	177	5
	182	8
	191	5
	194	11
	196F	1
	197A	19
	265B	7
	266D	15
5305-01-436-6379	167	24
	167A	21
	201A	3
	206	7
	225G	1
	274	8
2815-01-436-8370	23	44
2540-01-436-8436	217	4
4820-01-436-9135	3	17
5120-01-437-0480	301	8
5330-01-437-0547	15	4
2815-01-437-1014	15	5
2815-01-437-1015	15	5
2815-01-437-1016	3	2
2815-01-437-1017	3	2
2990-01-437-1020	26	5
2815-01-437-1021	16	1
2990-01-437-1022	26	6
2815-01-437-1027	16	3
5360-01-437-1104	22	23
5305-01-437-1324	173	1
5120-01-437-3658	299	5
5310-01-437-3836	196	4
5310-01-437-3837	196	5
5310-01-437-3838	196	12
5310-01-437-3839	169	22
5310-01-437-3845	188J	4
	188K	3
	197	9
	198	24
	198A	7
	265H	15
5325-01-437-4175	227B	7
5340-01-437-4983	26	7
5306-01-437-6309	172	4
	180	10
	182	5
	183	15
	190	8
	195	1
	201	12
	202	10
5305-01-437-6312	197	5
5305-01-437-6313	196	9
5365-01-437-6323	183	21
5305-01-437-7295	196	19
	197A	1
2815-01-437-7408	17	4
5340-01-437-8748	144	17
5340-01-437-8751	143	12
5305-01-437-9168	269A	1
	276C	2
5305-01-437-9169	198	3

CROSS REFERENCE INDEXES
NATIONAL STOCK NUMBER

STOCK NUMBER	FIG.	ITEM
5330-01-437-9216	KITS	9
2540-01-437-9932	230	4
	230A	4
2910-01-438-0655	23	34
5305-01-438-1201	167	21
	219	1
	283	6
5365-01-438-1556	117	19
5307-01-438-2319	15	1
5306-01-438-2320	3	22
5306-01-438-2322	15	2
5365-01-438-2406	171	1
5340-01-438-4497	146	10
5340-01-438-4498	219	15
2590-01-438-5739	201	13
5365-01-438-7025	180	12
5365-01-438-7026	180	12
5980-01-438-7452	52	2
5305-01-438-8821	87	12
5980-01-438-8939	KITS	54
5310-01-439-1154	152	3
5305-01-439-2123	273	8
3040-01-439-3662	101	4
2520-01-439-5265	94	20
5340-01-439-6455	23	19
5365-01-439-6498	183	20
2520-01-439-6831	KITS	57
2510-01-439-7087	161	21
2540-01-439-7308	33	22
2815-01-439-8163	15	3
2815-01-439-8164	1	1
4710-01-439-8165	100	4
	100A	14
4710-01-439-8167	100	3
2950-01-439-8169	26	3
5305-01-439-8170	219	3
5310-01-439-8172	167P	5
	167Q	8
	169D	9
	169F	7
	169H	9
	171	3
	179	5
	185	5
	187	1
	188F	1
	188I	1
	188N	5
	196	7
	200	35
	210	10
	219	14
	265J	2
	266E	5
5310-01-439-8173	167	15
	167A	17
	167D	3
	167E	1
	167P	22
	169	9
	169F	8
	169G	9
	170	10
	173	2
	179	4
	180	3
	181	1
	182	4
	185	10
	188	5
	188A	6
	188B	1
	188C	6
	188D	1
	188E	1
	188G	15
	188H	8
	188J	3
	188K	1
	188L	8
	188M	1
	189	1
	189G	14
	192	7
	193	18
	195A	10
	196	23
	197A	6
	198	5
	200	8

CROSS REFERENCE INDEXES
NATIONAL STOCK NUMBER

STOCK NUMBER	FIG.	ITEM	STOCK NUMBER	FIG.	ITEM
	202A	12		196	25
	206	11		219	5
	207	9		235	10
	210	15	5310-01-439-8181	172	2
	225G	9		174	2
	249G	19		175	2
	249I	11		185	9
	249J	4		188	1
	282A	4		188G	14
	284	3		188I	2
	288A	6		188L	6
5310-01-439-8177	167O	3		188M	3
	169D	7		188N	19
	173	4		189	6
	174	5		190	5
	175	5		190	9
	176	5		284	5
	177	2	2990-01-439-8249	17	2
	182	16	5331-01-439-8821	196	13
	183	1	5320-01-439-9728	167A	18
	188	7		167C	9
	188A	5	3120-01-440-0043	253	9
	188B	9	5320-01-440-0320	219	12
	188G	2	5962-01-440-0369	56	8
	188H	1	5340-01-440-1351	160	26
	188N	6	5340-01-440-1428	181	20
	188O	12	5340-01-440-1435	182	18
	189G	24		207A	44
	190	4		207B	20
	191	7	5340-01-440-1441	200	25
	195	19	5340-01-440-1442	200	25
	195B	6	5305-01-440-3664	180	7
	195C	7		181	19
	196F	22	5305-01-440-3669	183	10
	197A	18	5305-01-440-3670	192	16
	200	1		193	14
	202	8		195	17
	265B	11	5305-01-440-3672	196	2
	265C	10	5305-01-440-3673	178	1
	265G	13	5340-01-440-3804	183	16
	266D	6	2510-01-440-5301	141	17
	275	8	4820-01-440-7461	3	18
5310-01-439-8178	200	32	5340-01-440-9678	21	18
5310-01-439-8179	182	24	5340-01-441-1727	219	6
5310-01-439-8180	178	5	5325-01-441-3160	169	21

CROSS REFERENCE INDEXES
NATIONAL STOCK NUMBER

STOCK NUMBER	FIG.	ITEM
5340-01-442-0308	100	23
	100A	15
5310-01-442-1109	266D	2
2990-01-442-1168	17	7
3110-01-442-2421	198	14
5330-01-442-2874	KITS	23
5340-01-442-4876	78	1
5940-01-442-6298	78	3
3020-01-442-7278	43	3
3020-01-442-7485	4	12
5935-01-442-8569	77	9
4210-01-442-8750	266H	4
	266I	3
	266J	15
	266L	9
	266N	10
6680-01-442-9413	267	2
4720-01-442-9875	126	1
2590-01-443-0361	87	6
4720-01-443-3033	126	26
2530-01-443-3405	KITS	58
2540-01-443-6459	175	1
2540-01-443-6467	210	20
2540-01-443-6469	210	20
5340-01-443-6908	80	25
4720-01-443-8487	127	25
5980-01-443-9093	61	1
5935-01-443-9124	78	6
5310-01-444-0226	168	2
5310-01-444-0605	126	8
4730-01-444-0701	39	13
7690-01-444-1355	244	4
3020-01-444-1359	260	11
5360-01-444-1585	169	24
3040-01-444-1756	260	2
3020-01-444-1846	117	26
3020-01-444-2311	137	3
2520-01-444-2711	97	5
2920-01-444-2749	45	8
5310-01-444-3084	72	10
2590-01-444-3317	42	9
3040-01-444-3350	253	14
2510-01-444-3360	28	21
2590-01-444-3399	253	15
3010-01-444-4018	260	12
3010-01-444-4019	260	15
3110-01-444-4020	260	7
3110-01-444-4100	260	14
2590-01-444-5046	273	31
2540-01-444-5340	232	40
	287A	8
3020-01-444-5447	45	5
3040-01-444-5640	55	4
2540-01-444-6368	179	2
4720-01-444-6433	232	10
2540-01-444-6615	232	41
2540-01-444-6642	232	25
2930-01-444-6649	41	4
5315-01-444-8970	201K	24
5340-01-444-9074	169	15
6685-01-444-9478	39	1
	39A	1
4730-01-445-2358	39	15
	39A	18
6220-01-445-5058	54	12
5935-01-445-5144	78	4
5935-01-445-5599	78	2
4720-01-445-5690	232	9
2540-01-445-5929	179	2
5360-01-445-6258	169	12
5360-01-445-6259	167E	12
	169	4
5325-01-445-6437	142	13
2910-01-445-9041	23	42
3040-01-445-9101	23	8
3040-01-445-9110	267	15
5340-01-446-3124	215	23
3040-01-446-3684	260	16
3020-01-446-3695	260	26
3020-01-446-4387	260	13
5305-01-446-4660	167	2
	167A	2
	169F	15
	170	24
5306-01-446-4661	189G	35
5330-01-446-4696	260	21
	260	35
2590-01-446-5957	260	20
	260	31
2590-01-446-5962	260	17

CROSS REFERENCE INDEXES
NATIONAL STOCK NUMBER

STOCK NUMBER	FIG.	ITEM
4720-01-446-7223	12	24
5340-01-446-7449	167O	5
	210	11
5342-01-446-8954	45	4
6140-01-446-9498	66	23
2815-01-446-9537	23	42
4710-01-446-9570	21	1
5315-01-447-0492	89	4
5310-01-447-0968	89	3
2540-01-447-2236	232	13
5315-01-447-2276	266D	13
5325-01-447-2281	266D	12
5306-01-447-2568	42	13
	266	26
1010-01-447-2983	266D	10
2540-01-447-3457	215	5
3040-01-447-3797	90	7
2910-01-447-3911	28	13
5330-01-447-4762	87	4
5340-01-447-5839	82	3
3040-01-447-7995	89	2
3120-01-447-8658	260	22
	260	36
3120-01-447-8663	260	19
5305-01-447-9227	232	26
5355-01-447-9655	84	3
2590-01-448-1105	259	1
5340-01-448-1213	267	5
5310-01-448-3219	232	27
5306-01-448-5073	175	9
	188G	5
	188H	4
	189G	27
	196F	25
5305-01-448-5074	260	18
5305-01-448-5080	260	23
3120-01-448-6268	253	13
3120-01-448-6269	253	10
2590-01-448-6351	253	8
	256	11
2930-01-448-9439	36	1
	38A	5
5305-01-449-1001	182	22
	207A	36
2590-01-449-1777	256	1
5305-01-449-1983	133	31
2530-01-449-2495	113	22
	119	22
5307-01-449-3769	204	36
	206	6
5340-01-449-9309	216	13
	217	2
	217A	2
5307-01-450-3072	101	11
	101A	12
	141	8
	141A	23
2540-01-450-4015	227B	1
2540-01-450-4017	226	1
2540-01-450-4019	227C	1
2540-01-450-4021	226	1
2540-01-450-4022	227B	KIT
2540-01-450-5477	227C	2
2510-01-450-5479	226	7
	227C	19
2510-01-450-5480	226	7
	227C	19
2510-01-450-5482	227C	5
2510-01-450-5483	227C	5
5340-01-450-6572	201G	21
2540-01-450-7686	227B	1
5340-01-450-8693	204A	43
	266	4
3990-01-451-4203	203	1
5340-01-451-5903	207B	11
	266	14
5330-01-452-2474	25	23
5120-01-452-4396	299	3
3040-01-452-9065	102	8
5365-01-455-7545	4	13
4720-01-455-7664	25	59
4720-01-455-7830	14	6
4720-01-455-7861	25	9
5306-01-455-8013	87	5
5306-01-455-8016	35	34
2815-01-455-8424	63	12
5340-01-455-8700	262	KIT
2590-01-455-8986	25	42
2590-01-455-9123	232	12
2540-01-455-9308	232	42

CROSS REFERENCE INDEXES
NATIONAL STOCK NUMBER

STOCK NUMBER	FIG.	ITEM	STOCK NUMBER	FIG.	ITEM
2540-01-455-9322	162	11		193	11
2530-01-455-9330	KITS	55A		194	1
5340-01-455-9885	142	18		195	6
4720-01-455-9981	25	10	2520-01-456-5014	94	6
4820-01-456-0168	126	15	5365-01-456-5637	28	36
	126A	3	4140-01-456-5685	281	4
4820-01-456-0172	31	24	5315-01-456-6254	95	7
5365-01-456-0730	28	19	2520-01-456-6256	97	20
5340-01-456-1500	84	11	4820-01-456-6257	100	22
5340-01-456-1502	62	4		100A	29
5340-01-456-1503	162	27	4320-01-456-6258	98	34
5365-01-456-2032	113	30	5340-01-456-6554	25	43
	119	30		264	3
2510-01-456-2277	153	3	5340-01-456-6557	27	11
2520-01-456-2736	93	6	2520-01-456-6660	117	14
5315-01-456-2737	95	7	5930-01-456-7880	97	13
5315-01-456-2738	95	7	3040-01-456-7881	95	16
5315-01-456-2739	95	7	5315-01-456-7882	95	7
5315-01-456-2740	95	7	2520-01-456-7883	93	7
5340-01-456-2741	95	19	5330-01-456-7886	96	5
5365-01-456-2742	95	10	2520-01-456-7888	97	9
5315-01-456-2743	95	7	2510-01-456-7889	204	3
5330-01-456-2744	97	10	5330-01-456-8823	113	20
5360-01-456-2745	95	13		119	20
5340-01-456-2751	128	3	5330-01-456-8882	163	34
2815-01-456-2763	3	29		163A	1
2815-01-456-2772	3	29		164	11
2815-01-456-2774	3	29		164A	10
4720-01-456-2944	126	37	4720-01-456-8970	276A	7
4710-01-456-3627	279A	3	5330-01-456-8995	284	9
5330-01-456-3884	113	11	5340-01-456-9885	142	27
	119	11		142A	21
5340-01-456-3913	163	2		143A	13
	163A	4	5340-01-457-0003	142	27
	164	9		142A	21
	164A	8		143A	13
5340-01-456-3917	189A	9	5340-01-457-0459	163	30
	189B	20		163A	31
	189C	15	4730-01-457-0727	126	36
	189D	9		126A	23
	189I	21		127	8
	189J	26		127A	5
	189K	15	5340-01-457-0804	209A	4
	189L	12	2510-01-457-0949	144	20
	192	19	2530-01-457-1337	KITS	56

CROSS REFERENCE INDEXES
NATIONAL STOCK NUMBER

STOCK NUMBER	FIG.	ITEM
5340-01-457-1778	196B	17
	196G	38
6150-01-457-2964	200G	4
5310-01-457-3171	45	6
5310-01-457-3292	110	16
	125A	2
	125B	2
	200F	21
5365-01-457-3364	196D	13
	196G	59
5310-01-457-4009	163	8
	163A	8
	164	15
	164A	15
2640-01-457-5552	131	15
	131A	15
5340-01-457-5571	196D	11
5340-01-457-5734	48	9
4720-01-457-6586	12	23
3120-01-457-7089	204A	32
	266	12
5360-01-457-8018	151	1
5365-01-457-8947	196B	23
3020-01-458-0176	42	5
	273	5
	42A	5
3020-01-458-0185	42	3
	273	3
5305-01-458-1670	167G	23
	195E	13
	196C	18
2590-01-458-2609	25	8
5330-01-458-3810	205	3
	205A	4
5340-01-458-6386	128	2
5340-01-458-7147	127	26
5340-01-458-7156	127	12
2510-01-458-8036	BULK	20
5340-01-458-8236	126	39
2510-01-458-9496	25	53
4130-01-459-0475	273	20
	273A	19
3120-01-459-3844	4	2
5342-01-459-4992	204A	30
	266	1
5325-01-459-5008	174	3
	175	3
2520-01-459-5454	KITS	16
2530-01-459-5890	128	4
5330-01-459-6477	KITS	55
2520-01-459-8531	KITS	59
2520-01-459-8532	97	12
5340-01-459-9424	163	11
	163A	12
2530-01-459-9493	KITS	35
2530-01-459-9494	KITS	36
2530-01-459-9495	KITS	37
2510-01-459-9496	274	11
2510-01-459-9499	207	33
5340-01-459-9500	286	6
2510-01-459-9501	283	9
5305-01-459-9564	147	6
	266B	17
5340-01-460-2420	281	8
5340-01-460-2421	282	3
5340-01-460-2422	281	8
5340-01-460-2424	281	15
4730-01-460-2425	284	12
6150-01-460-2427	284	6
2540-01-460-2428	275	3
2540-01-460-2434	207	38
4710-01-460-2435	276A	9
4720-01-460-2436	276A	10
2540-01-460-2437	207	39
2530-01-460-2439	137	1
5331-01-460-2442	274	2
	276G	5
5340-01-460-2443	287	6
5340-01-460-2446	281	5
2540-01-460-2448	207	34
2540-01-460-2450	207	37
2540-01-460-2451	207	35
2510-01-460-2452	288	16
5340-01-460-2455	281	12
4130-01-460-2456	279A	2
5340-01-460-2457	279A	9
4710-01-460-3301	276A	8
2540-01-460-3302	286	11
5340-01-460-3304	281	5
5340-01-460-3305	281	15

CROSS REFERENCE INDEXES
NATIONAL STOCK NUMBER

STOCK NUMBER	FIG.	ITEM	STOCK NUMBER	FIG.	ITEM
5340-01-460-3306	286	3	5360-01-460-9073	98	18
5355-01-460-4586	84	2	4730-01-460-9074	281	13
6105-01-460-4950	286	17		284	11
2540-01-460-4952	286	13		288	13
2540-01-460-4953	287	2	5340-01-460-9075	286	4
5340-01-460-4954	286	14	4820-01-460-9079	KITS	80
2510-01-460-4955	288	5	2510-01-460-9080	157	24
4130-01-460-4956	288	4	4710-01-460-9630	20	9
2540-01-460-4957	288	18	5315-01-460-9907	89	11
6150-01-460-4958	258	8	5325-01-460-9908	88	10
2510-01-460-4959	281	11	3040-01-460-9964	89	13
4730-01-460-4960	288	15	4810-01-460-9975	98	16
2520-01-460-4961	93	11	4820-01-460-9988	98	27
5340-01-460-5002	207A	41	4820-01-460-9991	98	13
	207B	45	4820-01-461-0011	98	20
5340-01-460-5291	158	24	2520-01-461-0073	93	9
5340-01-460-5306	112	16	2520-01-461-0074	93	8
5935-01-460-5508	260	48	2520-01-461-0076	91	2
4730-01-460-5520	89	12	2520-01-461-0078	94	17
4130-01-460-5782	282	1	2520-01-461-0083	94	13
2930-01-460-7507	39	18	2520-01-461-0085	94	7
	39A	21	2520-01-461-0092	93	1
5340-01-460-8207	88	22	2520-01-461-0099	91	9
4820-01-460-8288	98	24		92	8
2520-01-460-8301	KITS	24	2520-01-461-0107	90	14
3010-01-460-8309	94	14	2510-01-461-0562	36	8
2590-01-460-8316	89	14	2510-01-461-0568	36	8
2590-01-460-8320	196D	32	2920-01-461-1065	84	4
2520-01-460-8323	86	1	2510-01-461-1397	166	10
5325-01-460-8350	167C	14	5330-01-461-1428	166	16
	209A	5	5975-01-461-1433	77	15
	249B	24	2540-01-461-1460	164	19
5340-01-460-8361	98	21	2520-01-461-2374	88	24
5340-01-460-8362	96	25	5306-01-461-3555	88	15
5340-01-460-8363	96	31	5306-01-461-3557	88	14
5340-01-460-8364	96	29	5305-01-461-4396	232	32
5330-01-460-8987	94	4	5305-01-461-4400	163	19
5330-01-460-8988	88	9		163A	20
5330-01-460-8997	166	15	2530-01-461-4732	125	13
5330-01-460-9004	166	17	5360-01-461-4931	89	9
5360-01-460-9068	98	12	2520-01-461-5133	98	25
5360-01-460-9069	96	3	2590-01-461-5213	279	6
5360-01-460-9070	98	23	2540-01-461-5222	287	1
4720-01-460-9071	BULK	9	2520-01-461-5648	98	29
5360-01-460-9072	98	28	5315-01-461-5649	98	14

CROSS REFERENCE INDEXES
NATIONAL STOCK NUMBER

STOCK NUMBER	FIG.	ITEM
3120-01-461-6677	98	31
3120-01-461-6679	98	31
3120-01-461-6680	98	19
2520-01-461-7077	KITS	60
5325-01-461-7157	94	28
4940-01-461-7809	288	12
4940-01-461-7810	282	5
5340-01-461-7851	116	6
5310-01-461-8011	20	8
5310-01-461-8043	63	13
	81	17
5310-01-461-8049	81	21
5305-01-461-8147	288	17
2540-01-461-8220	163	27
5305-01-461-8225	287	4
5315-01-461-8374	98	10
4730-01-461-9362	117E	5
	25	19
3020-01-462-1202	42	4
	273	4
3040-01-462-1286	KITS	22
5306-01-462-1445	56	2
5306-01-462-3335	286	18
	288	3
5340-01-462-3446	20	4
5310-01-462-4393	25	49
5310-01-462-4459	20	17
5310-01-462-4611	126	7
	126A	13
2510-01-462-4978	141	4
2510-01-462-5010	141	17
5325-01-462-6391	276C	1
	279A	5
5331-01-462-7294	98	32
2530-01-462-8068	125	12
2530-01-462-8079	124	22
	125	12
2540-01-463-0200	84	1
5310-01-463-0620	281	9
5310-01-463-2122	288	6
5310-01-463-2124	287	3
2540-01-463-3097	232	33
5310-01-463-3652	281	2
5306-01-463-5232	81	18
4910-01-464-0812	103	24
2520-01-464-1772	87	1
2510-01-464-6652	166	1
2510-01-464-6660	166	1
5325-01-465-0001	209	14
5310-01-465-0709	201G	10
	205C	6
	209B	10
2510-01-465-1512	159	5
5306-01-465-1564	108	12
5305-01-465-2811	288	7
5305-01-465-2813	207	30
	287	5
	288	10
5305-01-465-2814	209	1
	283	5
5305-01-465-2817	205	32
	223	5
	224	1
	279	5
5305-01-465-2818	281	1
	282	4
5305-01-465-2820	279	9
5305-01-465-2821	229	1
5306-01-465-2822	281	10
5305-01-465-2823	167	8
	167A	8
5305-01-465-2825	279	1
5325-01-465-3881	281	7
5310-01-465-4525	142	4
	142A	2
	167F	4
	167U	21
	170A	18
	249D	10
	42	7
	273	7
	302	4
5310-01-465-5109	288	2
5310-01-465-5111	274	6
5307-01-465-5796	39	11
	39A	13
2520-01-465-8809	98	9
2540-01-465-9030	266A	9
	266B	13
5310-01-465-9608	283	7

CROSS REFERENCE INDEXES
NATIONAL STOCK NUMBER

STOCK NUMBER	FIG.	ITEM
5310-01-465-9727	266B	19
4010-01-466-0849	200F	4
	201F	5
	201H	5
	205C	8
	265	5
5365-01-466-0850	266B	15
5340-01-466-1982	266B	10
5340-01-466-2425	266B	18
5340-01-466-2606	264	19
5340-01-466-2611	264	17
2510-01-466-3752	143	11
2540-01-466-3770	266B	16
2590-01-466-3824	266C	4
2540-01-466-3849	266B	4
2590-01-466-3866	266C	7
5340-01-466-4086	266B	20
5305-01-466-4358	281	6
5310-01-466-4461	282	2
	283	10
5310-01-466-4852	256	8
5340-01-466-5243	248	4
2540-01-466-6114	265	1
2590-01-466-7250	196B	6
5305-01-466-7937	192	13
	193	16
	194	13
	195	9
3030-01-466-9476	43	5
5330-01-468-3604	94	1
5310-01-469-1183	25	35
	223	24
	276C	3
7690-01-469-2566	244	5
2815-01-469-2644	3	2
5340-01-469-2648	3	2
5340-01-469-5774	204A	34
	266	7
5365-01-469-6343	232	31
2920-01-469-6903	62	2
5360-01-469-8077	97	22
5306-01-469-9903	97	3
6150-01-470-2011	82	1
5340-01-470-2069	232	23
4720-01-470-3076	140	24
6160-01-470-4172	157	3
5962-01-470-4621	56	8
5325-01-470-4624	204A	19
	204B	31
5325-01-470-4625	189A	1
	189B	6
	189C	1
	189D	1
	189I	1
	189P	15
5340-01-470-5892	157	15
5330-01-470-6543	97	4
5340-01-470-7135	157	4
5340-01-470-7160	157	6
5305-01-471-7623	264	16
3120-01-471-7844	98	31
5355-01-472-2179	254	4
	257	7
5310-01-472-3763	215	8
5307-01-472-5614	142	3
6160-01-472-6362	216	14
4710-01-472-7011	126	40
	127	23
5310-01-472-7216	217	9
5310-01-472-7476	225	5
5930-01-472-7762	273	22
	273A	22
5331-01-472-8177	26	2
5330-01-472-8179	19	4
5340-01-472-8534	84	12
5340-01-472-8859	253	4
5340-01-472-8865	253	4
2540-01-472-9343	213	17
5340-01-472-9381	253	20
5365-01-472-9876	143	9
2540-01-472-9902	214	1
2540-01-472-9914	214	6
2590-01-473-0265	257	1
2540-01-473-0354	214	6
2540-01-473-0361	214	7
2540-01-473-0362	214	13
2540-01-473-0367	214	16
2540-01-473-0368	214	17
2540-01-473-0369	214	17
2590-01-473-0566	216	19

CROSS REFERENCE INDEXES
NATIONAL STOCK NUMBER

STOCK NUMBER	FIG.	ITEM	STOCK NUMBER	FIG.	ITEM
2540-01-473-1048	214	5	5340-01-473-4800	225	4
6150-01-473-1169	225F	1	4730-01-473-5537	25	11
	252H	1	7690-01-473-6602	244	2
5305-01-473-1199	267	9	5340-01-473-6897	249B	25
5315-01-473-1590	265	2	5330-01-473-8584	97	8
5340-01-473-1614	254	1	2990-01-473-9420	249B	6
4710-01-473-1654	126	20	5340-01-474-0954	235A	10
4710-01-473-1708	100	8	5310-01-474-1368	249B	3
	100A	1	4720-01-474-2666	232	38
5340-01-473-1717	254	8	5310-01-474-2938	254	10
4710-01-473-1744	126	18		257	5
4710-01-473-1749	126	17		260	5
5306-01-473-1895	42	10	2540-01-474-3217	233	12
	273	23	5340-01-474-3279	235	12
5305-01-473-2045	228	22	2520-01-474-3901	110	1
	228A	22	5340-01-474-4002	97	21
4710-01-473-2352	233	8	5340-01-474-4011	100	24
5306-01-473-2641	254	6		100A	16
5340-01-473-2667	126	12		88	4
5340-01-473-2686	257	8	2520-01-474-4012	110	1
5340-01-473-2692	100	12	2510-01-474-5371	157	24
	100A	2	7690-01-474-5928	225F	8
	117G	19		252H	5
	138C	5	5306-01-474-6117	97	18
2590-01-473-2700	216	16	5340-01-474-6310	181	13
5340-01-473-2704	36	3	5340-01-474-6331	181	3
2530-01-473-2724	126	21	5365-01-474-6596	198	16
	126A	6	5980-01-474-6679	249C	8
5307-01-473-2757	254	11	4710-01-474-6875	249E	3
	257	6	4730-01-474-6940	249D	6
7690-01-473-2758	244	3	2520-01-474-7051	KITS	26
5320-01-473-2768	171	14	5365-01-474-7490	12	9
5340-01-473-3280	206	9	5365-01-474-7982	191	6
5310-01-473-3373	113	8	2540-01-474-8562	232	30
	119	8		287A	6
4820-01-473-3580	126	13	2540-01-474-8719	167	22
	140	3		167A	20
5340-01-473-4031	126	14	5340-01-474-8830	266B	22
	140	2	5306-01-474-8837	88	12
2510-01-473-4043	207	18	2520-01-474-8868	93	12
7690-01-473-4532	240	6	2520-01-474-8871	91	8
	244	1	4820-01-474-8911	KITS	15
7690-01-473-4550	240	3	5306-01-474-8959	96	10
7690-01-473-4594	242	1	4720-01-474-9105	249A	4
7690-01-473-4645	239	3	4720-01-474-9148	232	6

CROSS REFERENCE INDEXES
NATIONAL STOCK NUMBER

STOCK NUMBER	FIG.	ITEM	STOCK NUMBER	FIG.	ITEM
6150-01-474-9646	258	7		42B	1
5360-01-474-9653	167D	25	5305-01-475-3158	167G	18
	170	16		177	4
	181	11		196G	44
5320-01-474-9677	286	1		275	7
5325-01-474-9732	182	23	5340-01-475-3164	249A	12
	189G	11		249D	13
	189H	1	5340-01-475-3171	249A	35
	189O	17	5305-01-475-3364	196C	17
	195	4	5305-01-475-3402	249A	36
	201C	19	5340-01-475-3464	12	10
5999-01-475-0215	249A	32	5340-01-475-3480	12	2
5305-01-475-0290	186	4		12A	26
5305-01-475-0361	188A	7	5340-01-475-3485	12	2
	188B	8		12A	26
	188H	6	5340-01-475-3650	225B	2
	195B	2		252C	2
	195C	4	5340-01-475-3668	181	21
5305-01-475-0404	175	7	5640-01-475-3698	170	7
	176	12	4710-01-475-3753	225B	1
	188N	13		252C	1
	189G	21	2910-01-475-3937	249E	10
5305-01-475-0553	167I	6	2540-01-475-3944	249A	33
	167T	40	2990-01-475-3969	249D	12
	169J	38	2930-01-475-3976	249A	34
	170	12	5340-01-475-4027	285	4
5305-01-475-0608	187	4	2510-01-475-4735	174	8
2540-01-475-0629	163	27	2510-01-475-4737	279	3
	163A	28	2510-01-475-4743	173	3
2510-01-475-0779	200	10	2540-01-475-4919	249E	KIT
2510-01-475-0796	200	36	3940-01-475-4983	225B	3
5305-01-475-0798	189	12		252C	3
5305-01-475-0878	179	7	5340-01-475-5065	12	16
2520-01-475-1083	KITS	61	5342-01-475-6643	12	3
4730-01-475-1191	249A	3	5342-01-475-6655	12	3
7690-01-475-1202	249C	6	3040-01-475-9145	168	13
4710-01-475-1227	249A	5	2520-01-475-9665	97	9
2590-01-475-1318	200	28	5325-01-475-9697	166B	7
2590-01-475-1325	200	22		200B	5
9320-01-475-1646	288	9		204A	45
6150-01-475-1843	249A	13		205	13
5306-01-475-2270	12	14		205A	10
4720-01-475-2616	249A	10		223A	14
5340-01-475-3147	249E	5		51A	13
5305-01-475-3154	196C	13	5340-01-476-0352	91	14

CROSS REFERENCE INDEXES
NATIONAL STOCK NUMBER

STOCK NUMBER	FIG.	ITEM	STOCK NUMBER	FIG.	ITEM
2540-01-476-0522	266C	KIT	4710-01-477-9032	97	15
5360-01-476-2692	97	7	4710-01-477-9034	97	15
3020-01-476-2701	113	38	3040-01-477-9645	253	12
	119	38	2520-01-478-0306	115	1
5306-01-476-3500	97	16	5305-01-478-2767	64	2
5306-01-476-3501	97	14	5305-01-478-3387	225F	7
5999-01-476-3674	249A	40		225F	9
	249C	3		252H	7
5330-01-476-3866	41	3	5330-01-478-3900	93	14
5340-01-476-4374	232	3	4730-01-478-4260	249A	6
2540-01-476-6062	249A	11		249C	1
5360-01-476-6291	95	6		249D	4
7690-01-476-6510	51	7	3110-01-478-4266	KITS	28
	238	10	9905-01-478-4267	231	4
	51A	8	2835-01-478-4268	94	2
3020-01-476-6520	137	4	3120-01-478-4269	92	1
5310-01-476-8589	166A	4	5330-01-478-4797	95	18
	166A	53	4730-01-478-5151	25	6
	167B	4	5310-01-478-5620	138B	10
	167B	53		249B	7
5310-01-476-9321	155	7	5330-01-478-5993	97	10
	155A	5	5330-01-478-5994	93	13
2540-01-476-9353	216	1	9515-01-478-6343	266B	5
	217	1	5330-01-478-6555	97	25
	217A	1	2520-01-478-6604	92	7
5365-01-477-2843	213	30	2520-01-478-6607	92	11
	213A	29	5945-01-478-7862	96	26
4930-01-477-3638	3	26	5340-01-478-9995	97	19
3120-01-477-3639	4	2	5640-01-479-1272	30	9
3110-01-477-3640	4	2		99	9
3110-01-477-3642	4	3		99A	10
3110-01-477-3643	4	3	3020-01-479-2069	92	13
3110-01-477-3644	4	4	5331-01-480-0748	94	26
3110-01-477-3645	4	3	5330-01-480-0752	KITS	31
3110-01-477-3646	4	4	5330-01-480-2502	88	21
3110-01-477-3647	4	4	5310-01-480-4161	42	8
6680-01-477-3650	10	4		273	18
6150-01-477-3656	66	10	3040-01-480-4797	94	23
6150-01-477-3659	66	19	5962-01-480-5246	56	8
4710-01-477-3662	88	6	5962-01-480-5248	56	8
2530-01-477-3670	113	1	5365-01-480-5282	42	19
2530-01-477-4194	KITS	69	5950-01-480-5374	96	30
5325-01-477-6608	98	22	5950-01-480-5377	96	11
5331-01-477-6762	98	32	5950-01-480-5380	96	14
5340-01-477-7052	98	11	5305-01-480-5408	42	16

CROSS REFERENCE INDEXES
NATIONAL STOCK NUMBER

STOCK NUMBER	FIG.	ITEM
2590-01-480-5656	252H	KIT
3110-01-480-5857	196D	9
	196G	63
5365-01-480-6812	88	23
3040-01-480-7297	90	7
3020-01-480-7299	90	8
3020-01-480-7302	90	8
3040-01-480-7309	90	13
3020-01-480-7311	90	17
3020-01-480-7321	90	17
5325-01-480-7331	95	17
3040-01-480-7536	90	14
2520-01-480-7553	86	1
3040-01-480-7591	90	22
3040-01-480-7593	90	16
3040-01-480-7595	91	15
3010-01-480-7597	KITS	30
3020-01-480-7630	90	17
2815-01-480-7632	11	6
3020-01-480-8698	42	17
	42A	3
5340-01-481-0558	42	21
	273	12
5355-01-481-5517	215	15
4730-01-481-6278	139	3
2520-01-481-8344	KITS	90
2520-01-481-8460	KITS	29
2520-01-481-8479	91	11
	92	17
2540-01-481-9178	56	5
2540-01-481-9194	56	4
3020-01-482-1834	42	18
	42A	4
2520-01-482-4280	KITS	18
6680-01-482-4995	138A	15
2920-01-483-2291	46	27
5325-01-483-7480	200H	13
5975-01-484-1150	74	14
5330-01-484-1471	26	8
7690-01-484-4111	243	6
6680-01-484-5367	64	4
5340-01-484-7646	143A	14
5340-01-484-7760	35	3
2530-01-484-9573	125	2
2530-01-484-9574	125	2
4720-01-484-9983	140	26
	225D	2
4720-01-485-0104	140	25
	225D	1
4720-01-485-0416	225C	1
9905-01-485-2102	231	2
6150-01-485-4379	225E	1
1005-01-485-4456	196G	39
2590-01-485-5455	225A	1
	252B	1
5340-01-485-5962	225A	13
5340-01-485-5977	225G	5
5340-01-485-6012	196G	22
1005-01-485-6411	196C	10
5330-01-485-6499	3	8
5340-01-485-6967	256	14
5340-01-485-7254	225G	4
4320-01-485-7480	98	3
4810-01-485-8109	225G	10
2590-01-485-8343	225A	15
5340-01-486-1539	256	18
4720-01-486-2851	252D	6
5306-01-486-2891	3	25
6150-01-486-3605	225F	4
6150-01-486-3606	252G	1
	252H	6
5330-01-486-4417	196G	61
2541-01-486-4915	149	21
4720-01-486-5249	252D	5
5340-01-486-6138	225A	21
5340-01-486-8886	252A	3
5340-01-487-0292	252A	2
2540-01-487-3616	230A	7
2540-01-487-3626	230A	7
2540-01-487-3673	230	4
	230A	4
5330-01-487-7129	117	15
5340-01-487-7203	256	5
5365-01-488-5594	42B	8
3030-01-488-5606	43	5
	44A	30
5340-01-488-5609	36	3
5365-01-488-5615	36	2
5340-01-488-5619	126A	17
4710-01-488-5621	126A	35

CROSS REFERENCE INDEXES
NATIONAL STOCK NUMBER

STOCK NUMBER	FIG.	ITEM	STOCK NUMBER	FIG.	ITEM
4710-01-488-5625	126A	1		42A	18
5340-01-488-5630	126	6	5310-01-491-2014	138B	8
3020-01-488-5635	138B	12	5305-01-491-2143	138B	9
3020-01-488-5638	43	3	6110-01-491-2158	54	8
5365-01-488-5640	273A	8	5340-01-491-2205	273A	10
	42A	11		42A	13
	42B	7		42B	5
5340-01-488-5643	45A	5	3020-01-491-2659	42B	6
5340-01-488-6073	45A	1	3020-01-491-2671	42B	9
4710-01-488-6076	233	8	2530-01-491-2681	138B	3
4710-01-488-6143	138A	1	2510-01-491-6919	265	KIT
2530-01-488-6147	138A	6	5340-01-491-7144	264	6
4720-01-488-6156	138B	14	5340-01-491-7497	97	17
4730-01-488-6163	233	42	4730-01-491-8047	140	4
5340-01-488-6179	45A	6	5306-01-491-9414	95	20
5340-01-488-6181	273A	5	5306-01-492-5668	8	1
	42A	8	4710-01-493-1712	21	24
5340-01-488-6185	138A	5	5340-01-493-2538	21	23
5306-01-488-6213	116A	10	5340-01-493-2555	21	25
	117A	6	5340-01-493-2569	11	18
4720-01-488-6218	117E	1	4730-01-493-3828	11	11
4720-01-488-6220	117E	8	3040-01-493-4036	92	7
	140	19	4730-01-493-4056	138A	26
4810-01-488-6225	117F	8		138B	15
4720-01-488-6230	117F	1	2530-01-493-5859	131	1
4720-01-488-6232	117F	2	2930-01-493-6007	41	2
5340-01-488-6234	117A	4	5340-01-493-7444	196G	46
4710-01-488-6236	117D	2	5340-01-493-9134	97	17
4710-01-488-6237	117E	4	5331-01-494-2431	96	12
4710-01-488-6241	117B	4		96	15
4710-01-488-6243	117E	9	2590-01-494-3532	252E	1
4710-01-488-6311	117B	3	5340-01-494-6794	265	9
4720-01-488-6424	117C	1	2815-01-494-9210	3	1
4720-01-488-6426	117A	2	5330-01-495-0145	252F	8
4730-01-488-6433	117E	7	5945-01-495-0483	252F	11
	140	1	5315-01-495-0498	196G	48
2520-01-488-7016	97	12		201F	6
2520-01-489-0850	KITS	62	2590-01-495-0534	25	13
5310-01-490-4433	265	13	2540-01-495-0817	220	2
	266H	2		221	3
	35	10		221A	1
5310-01-490-7461	42B	10	3040-01-495-1286	225I	1
3020-01-491-0776	273A	9	3040-01-495-1374	225J	1
	42A	12	5305-01-495-1670	252F	12
2920-01-491-2011	273A	14	3040-01-495-1788	225I	6

CROSS REFERENCE INDEXES
NATIONAL STOCK NUMBER

STOCK NUMBER	FIG.	ITEM	STOCK NUMBER	FIG.	ITEM
5305-01-495-2914	225A	16	5305-01-498-8398	214	3
	252E	2	5340-01-498-8836	225J	10
5305-01-495-2916	252F	13	2520-01-498-9104	116	4
5325-01-495-3930	225I	13	2520-01-498-9279	56	1
5360-01-495-3942	225I	14	5340-01-499-1451	269A	5
5360-01-495-3945	225J	2	5340-01-499-1716	269A	13
5360-01-495-3951	225J	9	5340-01-499-1758	269A	14
5340-01-495-4867	225J	11	5340-01-499-1827	269A	7
4730-01-495-5135	252F	5	5340-01-499-2719	214	8
5365-01-495-5340	265	11	4720-01-499-7635	276A	14
3120-01-495-5549	225I	4		279A	8
3120-01-495-5557	225I	19	4720-01-499-7648	276A	3
3120-01-495-5563	225I	12	2540-01-500-0309	265E	7
5360-01-495-5710	225I	18	5975-01-500-1773	276C	7
4320-01-495-6948	225H	4	2540-01-500-2092	269A	3
4320-01-495-6971	225H	5	2540-01-500-2113	269A	16
5340-01-495-7546	265	9	2540-01-500-2122	269A	15
5315-01-495-8461	225J	3	5310-01-500-3204	112	22
5310-01-495-8545	252F	10		164	13
5310-01-495-8552	225I	9		167	14
5310-01-495-8556	252F	7		167A	14
5310-01-495-8559	225J	5		233	22
5330-01-495-9370	56	3		249B	26
5310-01-495-9438	161	22	5310-01-500-3209	189P	6
2540-01-496-0001	225H	1		195F	3
2590-01-496-0116	225I	10		195K	10
5340-01-496-0752	225J	7		200H	6
5340-01-496-0756	225J	4	2540-01-500-3446	266D	3
6220-01-496-1925	60	1	1005-01-500-3744	266D	4
4030-01-496-2315	225A	18	4010-01-500-5006	196G	47
	252E	4		201J	9
2540-01-496-3466	252F	1		201K	13
2990-01-496-3766	252	KIT	5340-01-500-5572	266D	9
4010-01-496-3987	225A	17	5340-01-500-5580	266E	3
	252E	3	5305-01-500-8280	79	5
2990-01-496-4023	250	10		133	30
4330-01-496-5720	KITS	32	5340-01-501-0316	214	4
2990-01-497-1042	35	20	2540-01-501-2690	249A	31
5340-01-497-2269	42A	6	5310-01-501-3086	142	6
5962-01-497-2519	56	8		142A	4
5306-01-497-4738	19	7	5310-01-501-3090	201O	6
5340-01-498-4369	214	11	5305-01-502-2933	3	30
2510-01-498-4996	266D	KIT	4710-01-502-5609	3	31
5310-01-498-7962	214	2	5365-01-502-6879	141A	11
5340-01-498-7964	149	8		142	17

CROSS REFERENCE INDEXES
NATIONAL STOCK NUMBER

STOCK NUMBER	FIG.	ITEM	STOCK NUMBER	FIG.	ITEM
5365-01-502-6900	142	17		129	6
5320-01-505-0478	208A	1		133	1
	249F	9		146	2
3020-01-505-2366	225I	11		147	3
4720-01-505-3475	62	6		150A	9
4720-01-505-4702	138A	30		167H	32
3020-01-505-5317	225I	15		167U	31
5330-01-505-7214	138A	11		189C	18
5331-01-505-7218	138A	8		189G	17
5340-01-505-9463	138A	9		189O	13
4330-01-506-2918	138A	13		204	19
4730-01-506-3179	138A	7		206	19
2040-01-506-4413	BULK	35		207A	30
2590-01-506-4930	BULK	36		208	25
3830-01-506-8307	225I	3		235	14
3020-01-506-9172	225I	17		250	17
2590-01-507-3608	232	24		265B	13
4720-01-507-8678	276A	6		265D	12
4720-01-507-8679	276A	11		265E	6
4720-01-507-8681	276A	5		265H	15
5310-01-509-2488	128A	12		266B	3
	163A	10		266C	1
	189A	4		266J	18
	189B	2	3040-01-509-6021	260	6
	189D	2	2510-01-510-0981	51	1
	189I	7		51A	1
	189J	1	5310-01-510-1237	35	23
	189K	1	4820-01-510-6041	KITS	70
	189L	2	2815-01-512-2230	11	9
	189M	6	4130-01-512-6676	274	4
	189N	2	6150-01-512-6679	283	1
	189O	7	5310-01-512-9400	87	8
	189Q	8	5310-01-513-1935	163	31
	195D	4		163A	32
	195E	16	4710-01-513-3959	249I	16
	195I	10	4730-01-513-4003	249F	2
	195J	13		249I	2
	196C	19	4710-01-513-4015	249I	6
	196D	4	4730-01-513-4021	249I	18
	196G	35	2815-01-513-4025	249G	6
	202B	13	4730-01-513-4027	249I	19
	202D	19	4710-01-513-4030	249I	15
	230B	9	4730-01-513-4042	249I	3
	25	45	2815-01-513-4050	249G	1
	87	15	2815-01-513-4054	249G	15

CROSS REFERENCE INDEXES
NATIONAL STOCK NUMBER

STOCK NUMBER	FIG.	ITEM	STOCK NUMBER	FIG.	ITEM
2815-01-513-4060	249G	17	5340-01-517-4192	199A	1
4730-01-513-4061	249I	9		200C	16
2815-01-513-4065	249G	8	5975-01-517-9077	99A	1
2540-01-513-4066	249G	10	5340-01-518-2955	276C	4
2540-01-513-4068	249F	1	2540-01-518-3339	232	18
4710-01-513-4070	249I	5	5310-01-518-7173	100	16
6150-01-513-4093	249H	2		200E	18
6150-01-513-4094	249H	3	7690-01-518-8174	238	8
5975-01-513-4103	249H	1	7690-01-518-8437	238	7
5975-01-513-4184	276B	3	5340-01-519-3845	171	11
5360-01-513-4390	199	2	5330-01-519-7009	196	17
5365-01-513-4522	201A	6	5330-01-519-7016	196	16
	201C	9	5330-01-519-7029	196	15
5330-01-513-4894	279A	6	2590-01-519-7840	BULK	21
5340-01-513-4903	167E	21	2510-01-520-3995	171	15
	274A	2	2540-01-520-4910	164A	19
5340-01-513-4907	269A	10	5331-01-520-4916	281B	2
5340-01-513-4908	249G	11	5930-01-520-4919	51A	7
5340-01-513-4910	249G	13	5331-01-520-6192	281B	1
5340-01-513-4912	249G	12	2510-01-520-7135	201A	1
5310-01-513-5413	265A	2		201C	1
	265B	15	2510-01-520-7145	201A	5
	265C	6		201C	8
	265D	2	2510-01-520-7983	266B	5
	265E	11	5930-01-521-0167	274	1
5305-01-513-5667	192	23	5310-01-521-2135	167D	4
	193	21		182	17
	194	8		189E	1
	195	15		195	2
	196E	14		201A	7
	197A	29		201C	12
5305-01-513-5711	196E	7		210B	3
5305-01-513-5713	249I	4		228	36
	249J	10		249G	2
4720-01-515-9683	37	13		249I	13
5325-01-516-6126	279A	4		249J	8
5320-01-516-7019	238	20		274	10
5975-01-516-8350	276B	2		275	10
2540-01-516-8369	215	2		276C	10
2540-01-516-8389	216	1	5310-01-521-2727	196G	32
4710-01-516-9676	276A	4	5340-01-521-4569	171	16
4720-01-516-9679	276A	12	4730-01-522-1312	138C	15
4710-01-516-9686	276A	13	5305-01-522-7214	167T	24
5330-01-517-2180	274	12		167T	31
5945-01-517-3434	22	19		169J	23

CROSS REFERENCE INDEXES
NATIONAL STOCK NUMBER

STOCK NUMBER	FIG.	ITEM	STOCK NUMBER	FIG.	ITEM
	169J	30		193	5
5310-01-523-2980	265A	10	5305-01-530-5159	167Q	5
	265F	5		188F	4
5970-01-523-3417	273	9		188N	15
	273A	1		188O	6
4730-01-523-4084	21	2	5340-01-530-6348	167D	26
	140	10	5340-01-531-4949	189G	38
5360-01-524-6029	151	1	2540-01-532-8882	KITS	75
5365-01-524-8686	171	6	5330-01-533-2947	BULK	69
5365-01-524-8800	169H	7	4010-01-533-5191	196G	49
5330-01-524-8863	167D	10	5310-01-533-6150	266F	12
5340-01-524-9543	189K	19		266I	10
	189L	8	2510-01-534-2358	51	9
5340-01-525-0619	196G	30	6620-01-534-2370	52	9
5340-01-525-0633	196G	41	5120-01-534-5919	150A	6
5310-01-525-0735	196G	13	2540-01-535-0836	167	27
2540-01-525-0941	196G	36	2540-01-535-0837	167	27
5340-01-525-1088	196G	3	2540-01-535-0851	167A	24
5310-01-525-1238	201A	8	2540-01-535-0852	167A	24
	201C	10	2510-01-535-2778	167C	1
5305-01-525-1327	196G	23	2510-01-535-2779	167C	1
5305-01-525-1329	196G	25	2510-01-535-2780	167C	1
5330-01-525-1972	BULK	23	2510-01-535-2781	167C	1
2590-01-525-1995	KITS	6	5305-01-535-4716	196F	21
2540-01-525-3627	167E	7		265B	10
2540-01-525-3630	167E	7	5340-01-535-4868	KITS	77
5340-01-525-4656	235A	11	5305-01-535-5634	167	30
4210-01-525-6692	266H	3		167A	27
	266I	5	5340-01-535-5640	196F	24
	266J	17	5340-01-535-5662	189G	33
	266L	10		196F	29
5330-01-525-7057	13	3	5340-01-535-5666	196F	27
5340-01-525-8546	235A	9	5340-01-535-5671	196F	23
4730-01-528-0977	138C	12	5340-01-535-5700	189E	5
	140	9	5340-01-535-5705	196E	6
5320-01-529-9455	171	12	5340-01-535-5708	196E	3
2590-01-529-9541	264	KIT	5305-01-535-5709	195C	6
5340-01-530-0943	171	11		196F	30
5306-01-530-1592	225G	6	5305-01-535-5773	167	31
5340-01-530-1744	196G	55		167A	28
	200	17	2510-01-535-6000	210B	8
	200C	11	2510-01-535-6001	210B	7
	201C	22	5340-01-535-6359	196F	7
5305-01-530-4758	169H	13	5340-01-535-6843	196F	20
	188D	6		265C	1

CROSS REFERENCE INDEXES
NATIONAL STOCK NUMBER

STOCK NUMBER	FIG.	ITEM	STOCK NUMBER	FIG.	ITEM
5340-01-535-6946	KITS	78	9515-01-536-0617	189D	17
5340-01-535-7729	189A	11		189K	16
	189B	18	9515-01-536-0618	167C	13
	189C	13	9515-01-536-0622	189L	20
	189D	7	9515-01-536-0635	202A	1
	189I	19	9515-01-536-0645	196F	15
	189J	27	5340-01-536-0653	189E	5
	189K	13	9515-01-536-0927	196F	5
	189L	10	9515-01-536-0928	189I	16
5340-01-535-7920	202A	6	5340-01-536-0999	196E	9
5340-01-535-8280	189G	13	9515-01-536-1070	189I	22
	189P	21	9515-01-536-1111	189C	12
5340-01-535-8682	189G	15		189D	12
5340-01-535-8684	196F	17		189K	12
5340-01-535-8702	196F	14		189L	16
	265C	8	9515-01-536-1114	189I	3
5340-01-535-8707	189C	16	9515-01-536-1118	196F	13
	189K	18	9515-01-536-1254	189J	12
5340-01-535-8780	189B	24	9515-01-536-1260	189I	12
	189J	31	9515-01-536-1261	189J	4
5310-01-535-8822	120	3	9515-01-536-1262	189D	15
5340-01-535-9424	196F	18		189L	9
	265C	1	2540-01-536-1421	210B	6
2540-01-535-9671	189G	32	2540-01-536-1442	189G	32
3040-01-535-9715	196F	4	9515-01-536-1485	189B	13
5305-01-535-9887	196F	26		189J	16
5340-01-536-0005	196F	32	5340-01-536-2054	196E	2
	265C	11	4720-01-536-2673	276E	12
5340-01-536-0480	189G	15	4720-01-536-2674	276D	5
5340-01-536-0494	196F	28		276E	3
5340-01-536-0506	202A	6	4720-01-536-2681	276E	5
5340-01-536-0543	196F	16	4710-01-536-2688	276E	8
5340-01-536-0547	189G	13	4720-01-536-2727	276D	7
	189P	21	5340-01-536-2737	281A	1
5340-01-536-0557	141A	30	5310-01-536-2964	281D	1
	189A	10		287B	5
	189B	19	4720-01-536-2985	287B	8
	189C	14	4720-01-536-2992	276D	6
	189D	8	4720-01-536-2995	276E	7
	189I	20	4720-01-536-2999	276E	10
	189J	25	2510-01-536-3001	189G	28
	189K	14	5340-01-536-3003	287B	1
	189L	11	4720-01-536-3005	276E	6
5340-01-536-0605	189G	31	2930-01-536-3009	287C	1
5340-01-536-0607	189B	25	5930-01-536-3012	276G	1

CROSS REFERENCE INDEXES
NATIONAL STOCK NUMBER

STOCK NUMBER	FIG.	ITEM	STOCK NUMBER	FIG.	ITEM
4710-01-536-3017	117D	1	4720-01-536-6138	276D	3
2540-01-536-3021	189G	22		276E	1
2540-01-536-3029	287A	2	9515-01-536-6163	189G	25
5930-01-536-3033	276G	4	5305-01-536-8029	196F	31
4720-01-536-3061	276E	11		197A	25
4720-01-536-3065	287B	9	5305-01-536-8039	196E	17
5340-01-536-3290	287B	4	5340-01-536-8390	196E	1
4720-01-536-3328	276D	8	4720-01-536-8716	276F	3
	276E	13	5340-01-536-8755	KITS	79
9515-01-536-3333	189J	28	5340-01-536-9918	KITS	76
4720-01-536-3334	276D	1	9515-01-537-0521	196F	6
9515-01-536-3375	189K	8	4720-01-537-0552	276F	4
5310-01-536-3376	276G	7	2510-01-537-0678	281C	1
9515-01-536-3551	167C	13	2540-01-537-1090	210B	1
9515-01-536-3556	202A	1	2510-01-537-1092	189G	28
9515-01-536-3578	202A	2	4130-01-537-4404	288A	1
9515-01-536-3579	189I	2	5340-01-537-4713	274A	6
9515-01-536-3581	196F	9	4120-01-537-4995	287B	10
4720-01-536-3749	287A	1	9515-01-538-2319	189E	2
4720-01-536-3751	276E	9	9515-01-538-2843	196F	10
5340-01-536-3766	281A	1	9515-01-538-2875	196F	12
4810-01-536-3832	276F	1	9515-01-538-2884	189H	2
5340-01-536-4022	281D	2	9515-01-538-3042	189H	2
2540-01-536-4078	189G	22	9515-01-538-3132	202A	7
3830-01-536-4083	KITS	42	9515-01-538-3191	202A	7
9515-01-536-4092	189G	6	9515-01-538-3201	189E	4
2540-01-536-4093	210B	5	9515-01-538-3205	189E	4
4710-01-536-4106	276D	4	9515-01-538-3217	189E	2
	276E	2	9515-01-538-3499	189B	1
9515-01-536-4108	189G	37		189J	36
5340-01-536-4120	274B	2	9515-01-538-3506	189B	17
4710-01-536-4174	276G	6		189J	19
9515-01-536-4210	189G	30	9515-01-538-3523	189A	8
5340-01-536-4213	196E	10		189I	10
5340-01-536-4269	189A	17	9515-01-538-3531	189F	1
	189C	17	9515-01-538-3535	189B	7
	189D	5	9515-01-538-3550	189A	20
5340-01-536-4362	189F	5	9515-01-538-3560	189C	8
4720-01-536-4589	276E	4	9515-01-538-3564	189D	16
5340-01-536-4636	189D	6	9515-01-538-3565	189F	1
	189L	7	9501-01-538-3566	189G	12
2540-01-536-5762	210B	4	9515-01-538-3570	189G	12
2540-01-536-5776	210B	5	9515-01-538-4301	189G	1
5945-01-536-6091	274A	7	9515-01-538-4310	189G	3
	288A	2	9515-01-538-4337	189G	6

CROSS REFERENCE INDEXES
NATIONAL STOCK NUMBER

STOCK NUMBER	FIG.	ITEM	STOCK NUMBER	FIG.	ITEM
2540-01-538-4388	266C	KIT		36	7
5340-01-538-5849	226A	6		129	5
9515-01-538-9578	196F	8		265	6
2540-01-539-0180	226A	9		38A	9
2590-01-539-0647	226A	4	5310-01-542-0447	168	1
2590-01-539-0673	226A	4	5340-01-542-0454	266F	5
5305-01-539-1128	196E	8	5340-01-542-0506	188I	4
2540-01-539-1558	KITS	63	5305-01-542-0550	188A	9
2590-01-539-3332	196G	42		188B	5
5365-01-539-4098	287B	6		188G	8
5305-01-539-4101	274A	4		188N	9
	281A	2		188O	7
	287B	7	5340-01-542-1128	266F	5
4130-01-539-6297	276G	3	4120-01-542-1128	266I	KIT
6685-01-539-7057	287A	4	5340-01-542-1716	221C	7
6150-01-539-7270	274F	1	6150-01-542-1786	266F	1
6150-01-539-7287	274G	1		266I	7
6150-01-539-7293	274C	1		266K	9
6150-01-539-7304	274H	1		266O	12
2510-01-540-3430	167D	1	5340-01-542-2001	220A	13
2610-01-541-4090	132A	1		221B	7
5310-01-541-6845	113	6		221C	11
2540-01-541-7309	189A	23	5365-01-542-2010	220A	17
2540-01-541-9228	220A	2		221B	6
	221B	3		221C	14
	221C	1	5340-01-542-2540	221B	13
2540-01-541-9465	220A	15	5340-01-542-3351	220A	4
	221B	12	2540-01-542-3809	220A	15
	221C	5		221B	12
5310-01-541-9570	220A	7		221C	5
	221B	10	5315-01-542-3872	150A	28
	221C	15	5315-01-542-4594	150A	24
3040-01-541-9924	136	5	5340-01-542-4794	220A	16
2590-01-542-0372	201C	18		221B	8
5310-01-542-0395	143A	1		221C	12
	196B	21	5340-01-542-4800	220A	4
	2	15	4720-01-542-4805	266I	6
	163	9	5310-01-542-4808	220A	1
	201F	8		221B	2
	201G	23	5340-01-542-4809	266G	2
	201I	6	5305-01-542-4936	220A	12
	201M	15		221B	14
	208A	28		221C	9
	230	16	2540-01-542-4973	188F	3
	235A	14	2590-01-542-5024	201C	11

CROSS REFERENCE INDEXES
NATIONAL STOCK NUMBER

STOCK NUMBER	FIG.	ITEM	STOCK NUMBER	FIG.	ITEM
2540-01-542-5419	KITS	12		189J	5
2540-01-542-5421	188A	3	9515-01-544-2736	189C	2
2540-01-542-5492	188G	4	5305-01-544-6043	17	3
2540-01-542-5533	188G	11	4720-01-544-6888	101A	16
2540-01-542-5768	188D	8		107	1
2540-01-542-5777	188D	3		116A	2
5340-01-542-5867	KITS	13	4720-01-545-1965	100	1
2540-01-542-5996	188C	1		100A	5
2540-01-542-6032	188D	7	2510-01-545-5856	169E	32
2540-01-542-6059	188H	2	2510-01-545-5859	169A	1
2540-01-542-6364	201C	21	2510-01-545-5861	167L	1
2540-01-542-6366	201C	24	2510-01-545-5863	169A	1
5340-01-542-6993	220A	9	2510-01-545-5865	167L	1
5340-01-542-6996	220A	9	2510-01-545-5887	167F	1
4240-01-542-8160	201C	23	2510-01-545-5890	167F	1
4210-01-542-8163	266H	1	2510-01-545-5891	167F	1
4210-01-542-8167	266I	2	2510-01-545-5893	167F	1
3010-01-542-8199	150A	5	2510-01-545-5898	167F	6
2540-01-542-8219	188G	1		167K	1
2540-01-542-8249	188B	3	2510-01-545-5899	167F	6
2540-01-542-9650	189	14		167K	1
6350-01-542-9955	266F	3	2540-01-545-7418	167E	13
	266I	1		167H	16
	266J	6		167T	30
	266K	5		169J	28
	266M	6	4730-01-545-8308	128A	3
2540-01-543-0747	201C	5	4730-01-545-9713	37	1
5340-01-543-1611	166A	52	5360-01-546-2755	138A	12
	171	7	5306-01-546-3599	142	5
5340-01-543-1652	167B	52		142A	3
2540-01-543-3219	189	3	2540-01-546-4279	188E	5
5963-01-543-3619	266G	1	2540-01-546-4286	188C	3
	266O	6		188E	6
	266P	5	2510-01-546-6530	205A	1
5999-01-543-3624	266I	8	2540-01-547-2665	188C	2
	266M	7	2510-01-547-7168	185	8
9515-01-544-2256	189C	9	2510-01-547-9739	202D	11
9515-01-544-2262	189B	14	2590-01-547-9874	202D	24
9515-01-544-2269	189A	16	2510-01-547-9898	202D	18
9515-01-544-2279	189B	4	2510-01-547-9911	202D	23
9515-01-544-2295	189B	21	2510-01-547-9918	202E	6
9515-01-544-2299	189A	7	2510-01-547-9930	202D	14
9515-01-544-2303	189A	2	2510-01-547-9945	202D	25
	189A	3	5330-01-547-9973	202D	28
	189B	5	2510-01-547-9980	202D	26

CROSS REFERENCE INDEXES
NATIONAL STOCK NUMBER

STOCK NUMBER	FIG.	ITEM	STOCK NUMBER	FIG.	ITEM
5340-01-547-9981	202C	7		252	13
5305-01-548-0010	204B	1	5340-01-548-1476	202C	6
2510-01-548-0016	204A	36	5340-01-548-1480	204A	35
4010-01-548-0021	204A	23	9558-01-548-1659	207A	7
5340-01-548-0334	202D	16		207B	15
5340-01-548-0882	204A	44	5310-01-548-1848	2	8
5340-01-548-0885	204B	27		111	1
5330-01-548-0887	207B	23		141A	9
5330-01-548-0890	207B	23		142	21
5365-01-548-0905	207B	24		143	4
5340-01-548-0910	204B	2		143A	12
5340-01-548-0979	202D	16		144	13
3040-01-548-0981	202D	20		144A	4
5340-01-548-1158	202D	13		148	3
5340-01-548-1162	202D	13		149	5
5340-01-548-1166	204B	27		200H	12
2540-01-548-1182	202D	21		201F	7
2940-01-548-1183	25	21		201K	9
2510-01-548-1193	202E	6		226A	2
2510-01-548-1234	202D	27	2540-01-548-2050	207B	7
5310-01-548-1269	100A	10	2540-01-548-2055	207B	7
	12	7	5325-01-548-2516	207B	25
	12A	5		209C	7
	200E	16	5365-01-548-2564	207B	29
	200G	2	5365-01-548-2577	204A	26
	200H	9	5305-01-548-2600	204A	9
	200H	33	5365-01-548-2610	173	15
	201G	9	5325-01-548-2809	207B	8
	201K	32	5330-01-548-2833	202D	15
	201M	9	5340-01-548-2874	207B	31
	201N	5	5340-01-548-2936	207A	18
	207B	17		207B	32
	209B	6	5340-01-548-3174	287A	12
	209B	12	5330-01-548-3654	207A	8
	225K	4		207B	16
	267A	5	5310-01-548-3774	200E	19
	28	3		202D	10
	37	12	5330-01-548-3799	202D	15
	38A	6	5340-01-548-4281	202C	12
	40	3	5365-01-548-4284	207B	26
	83	4	5310-01-548-4372	204B	3
	142	9	5340-01-548-4829	207B	1
	205C	7	5340-01-548-4836	202D	20
	207	5	5307-01-548-4853	202C	10
	207	22	5310-01-548-4856	189Q	3

CROSS REFERENCE INDEXES
NATIONAL STOCK NUMBER

STOCK NUMBER	FIG.	ITEM	STOCK NUMBER	FIG.	ITEM
	202B	5	9515-01-552-1719	197A	27
	202C	3	9515-01-552-2159	195C	1
	202D	2	1290-01-552-4497	265H	17
5340-01-548-4859	204A	29	5920-01-552-4502	265J	17
5307-01-548-4869	204A	39		265K	5
5305-01-548-4872	204A	11	6110-01-552-4505	265H	10
5365-01-548-5005	207B	24	6105-01-552-5659	265G	2
5340-01-548-5058	207A	27	9515-01-552-7022	195A	9
5306-01-548-5059	204A	24	9515-01-552-7026	195A	4
	207B	47	9515-01-552-7037	195A	11
5310-01-548-5182	126A	14	9515-01-552-7042	195C	2
6150-01-548-6007	274G	3	9515-01-552-7048	195A	5
9535-01-548-6632	202D	1	9515-01-552-7068	195B	1
9535-01-548-6633	202D	1	5310-01-552-8302	195B	7
5340-01-548-6638	204A	22		195C	3
5340-01-548-6639	204A	20	5330-01-552-8710	167L	3
2510-01-548-6640	207B	6		169A	3
2510-01-548-6641	207B	6	5310-01-552-9654	200A	5
2510-01-548-6642	204A	46		200C	13
5306-01-548-6805	276G	2		200D	13
5310-01-548-6832	276G	11		200E	10
5310-01-548-6846	276G	10		200F	25
4720-01-548-7198	276D	2		201D	6
2540-01-548-9360	287A	7		201J	17
9515-01-548-9680	287A	5	2540-01-553-5282	202A	13
5340-01-549-5729	200D	2	2540-01-553-5303	202A	13
5325-01-549-9716	21	12	2510-01-553-8748	167F	1
2540-01-550-0862	287A	9	4210-01-554-1177	266P	KIT
5305-01-550-1827	167E	23	5305-01-554-2331	167K	10
5340-01-550-2511	197A	20		170A	14
	200D	6	5355-01-554-2334	167K	10
5305-01-550-5721	204B	22		170A	14
2540-01-550-7246	265L	1	2530-01-554-3441	135A	1
2540-01-550-7253	265D	15	2590-01-554-3458	KITS	64
2540-01-550-7386	265B	4	5305-01-554-4493	126A	32
2540-01-550-7387	265D	15	2530-01-554-4728	134	9
6650-01-550-7525	265A	4	2530-01-554-4731	138B	3
6650-01-550-7534	265A	8	6680-01-554-4738	267A	13
6650-01-550-7555	265A	4	6115-01-554-4741	267A	7
5365-01-551-0810	197A	31	6150-01-554-5512	266O	14
5360-01-551-0831	197A	15	2540-01-554-5909	195J	7
5360-01-551-0841	197A	15	2540-01-554-5912	195D	8
5330-01-552-0708	BULK	54	2540-01-554-5962	195K	5
9515-01-552-1624	195A	6	2540-01-554-6039	195F	16
9515-01-552-1631	197A	16	2540-01-554-6075	195E	2

CROSS REFERENCE INDEXES
NATIONAL STOCK NUMBER

STOCK NUMBER	FIG.	ITEM	STOCK NUMBER	FIG.	ITEM
5340-01-554-6159	167H	31		120	16
5340-01-554-6161	266L	14	2530-01-554-8309	120	6
5340-01-554-6165	167H	35	2530-01-554-8315	120	6
	167U	5	2530-01-554-8317	114	6
	189E	9	2530-01-554-8336	114	19
5305-01-554-6172	167G	21	2530-01-554-8340	114	6
2540-01-554-6401	202A	7	5330-01-554-8341	167F	19
5365-01-554-6601	167I	1		167S	2
	167I	18	2540-01-554-8350	189N	10
	167T	38	2540-01-554-8387	189P	4
	167T	54	2540-01-554-8393	189J	24
	169J	35	5365-01-554-8442	167I	4
	169J	50		167T	42
5365-01-554-6619	167G	20		167T	52
5340-01-554-6671	167H	24		169J	40
5340-01-554-6683	189M	15	2540-01-554-8458	189P	16
	189N	4	2540-01-554-8475	202A	7
5340-01-554-6707	167H	31	2540-01-554-8484	189E	4
2540-01-554-6770	189P	20	2540-01-554-8488	189F	1
2540-01-554-6785	189I	28	9515-01-554-8505	195G	5
2540-01-554-7145	195J	7	2540-01-554-8515	202B	9
2540-01-554-7148	195K	5	2540-01-554-8519	202B	9
2540-01-554-7151	195D	17	2540-01-554-8525	189E	4
2540-01-554-7161	195I	1	2540-01-554-8541	189P	20
2540-01-554-7188	189P	16	2540-01-554-8543	189M	11
9515-01-554-7194	195H	4	2540-01-554-8544	195I	9
2540-01-554-7223	195I	9	2540-01-554-8545	189J	34
2540-01-554-7228	195I	1	5340-01-554-8593	195H	1
5365-01-554-7830	195J	9	5340-01-554-8594	266J	1
	195K	8	2540-01-554-8629	195F	4
5365-01-554-7832	195I	6	5340-01-554-8744	189M	4
5310-01-554-7879	167F	17		189N	1
2530-01-554-8270	114	19	5365-01-554-8754	167I	1
5340-01-554-8280	167H	26	5365-01-554-8772	167I	2
5340-01-554-8286	266K	4		167T	37
2530-01-554-8288	114	8		169J	36
	120	8	5325-01-554-8797	266J	11
5340-01-554-8290	266J	10		266L	16
	266L	18		266N	6
	266N	3	2540-01-554-9185	195J	5
5365-01-554-8295	167I	12	7690-01-554-9199	238	12
	167T	53	2540-01-554-9215	195J	1
	169J	48		195K	1
5365-01-554-8305	167I	3	2540-01-554-9407	195F	10
2530-01-554-8307	114	16	2540-01-554-9596	195F	1

CROSS REFERENCE INDEXES
NATIONAL STOCK NUMBER

STOCK NUMBER	FIG.	ITEM	STOCK NUMBER	FIG.	ITEM
2540-01-554-9613	195J	1	6150-01-560-0297	265H	13
	195K	1	5330-01-560-1552	129	3
2540-01-554-9913	195E	1	2510-01-560-2317	141	4
2540-01-554-9977	195H	8	2510-01-560-2321	141	17
2540-01-555-0038	195D	11	5305-01-560-2360	167E	11
4710-01-555-0263	266J	13		169	8
2540-01-555-0428	142A	22	2510-01-560-2380	167D	14
2540-01-555-0462	142A	22	2540-01-560-2510	217A	4
5365-01-555-0821	167I	3	2990-01-560-2546	35	4
	167T	43	5305-01-560-2571	167D	15
	169J	41	5305-01-560-2574	185	12
5340-01-555-2871	266L	19	5340-01-560-2658	249G	16
	266N	4	5365-01-560-2670	167D	12
2540-01-555-3018	195D	1	5330-01-560-2670	167D	13
2510-01-555-5347	167F	1	5340-01-560-2676	138A	10
4710-01-555-6995	266L	6	2510-01-560-2683	167A	11
6150-01-555-7011	267A	12	3040-01-560-2688	196	8
6150-01-555-7019	267A	9	5325-01-560-2690	206	4
6150-01-555-7025	267A	11	2590-01-560-2698	197A	11
5365-01-555-7102	162	29	5340-01-560-2707	198A	5
9905-01-555-8180	239	3	2540-01-560-2711	167D	16
5340-01-556-1397	192	23	2590-01-560-2737	35	22
	193	20	5310-01-560-2745	197A	14
	194	6	2540-01-560-2757	213A	24
	194	7	2540-01-560-2873	84	5
	195	16	5340-01-560-2991	167P	19
6140-01-556-4352	265J	5		169F	10
	265J	7	5355-01-560-2999	197A	13
5310-01-557-8296	198A	6	5340-01-560-3007	167P	19
	265H	9		169F	10
2530-01-558-2138	131A	1	4730-01-560-3024	126	16
2530-01-558-3027	131A	2		126A	2
2530-01-558-3061	131A	6	6150-01-560-3036	274E	1
5310-01-558-5168	266F	7		274G	2
2540-01-558-5467	265L	KIT	5365-01-560-3051	167D	9
4720-01-558-7665	138C	16	5365-01-560-3060	155	9
5310-01-559-1296	169I	3	5340-01-560-3070	249I	17
5310-01-559-1319	169I	4	4720-01-560-3079	249I	21
6150-01-560-0229	265H	7	4730-01-560-3083	88	7
	265J	8	5330-01-560-3105	249G	18
6150-01-560-0238	265H	16	5340-01-560-3210	198A	4
6150-01-560-0249	265H	14	5340-01-560-3248	249I	12
6150-01-560-0255	265K	4	4720-01-560-3459	249J	11
6150-01-560-0279	265J	19	5305-01-560-3515	51A	14
6150-01-560-0284	265J	18	5315-01-560-3540	197A	12

CROSS REFERENCE INDEXES
NATIONAL STOCK NUMBER

STOCK NUMBER	FIG.	ITEM	STOCK NUMBER	FIG.	ITEM
5305-01-560-3585	167E	20	2590-01-563-2401	265E	9
2540-01-560-3654	197A	8	2590-01-563-2468	265H	1
4720-01-560-3940	249J	2	6160-01-563-2953	265J	1
2510-01-560-3945	213A	22	2590-01-563-2960	265D	9
5340-01-560-3953	189A	13	6160-01-563-2976	265J	13
	189B	16	5975-01-563-3002	265D	14
	189C	11	5305-01-563-3101	265B	19
	189D	10	5340-01-563-3273	167I	5
	189I	13		167T	39
	189J	15		169J	37
	189K	11	2590-01-563-3359	265B	16
	189L	13	5340-01-563-3420	167F	11
2510-01-560-3958	12	17	5325-01-563-3457	167H	2
5330-01-560-3987	197	16	2540-01-563-3475	265L	2
5365-01-560-3999	155	3	5330-01-563-3477	167K	7
5340-01-560-4006	217B	7		170A	6
2510-01-560-4018	167D	17	2590-01-563-3664	265E	5
5330-01-560-4055	167D	18	2590-01-563-3670	265E	13
5340-01-560-4274	223A	23	2590-01-563-3677	167I	20
5340-01-560-4377	167	17		167T	55
	167A	13		169J	52
5340-01-560-4417	196E	1	2540-01-563-3696	265L	3
7510-01-560-4927	BULK	73	5340-01-563-3719	265L	7
2540-01-560-5014	265L	4	5365-01-563-3730	167F	13
2540-01-560-9297	213A	14	5340-01-563-3732	167F	10
2510-01-560-9327	167A	11	2540-01-563-3748	265L	5
2510-01-560-9337	197A	7	3040-01-563-3761	167I	24
2590-01-560-9348	167C	3		167I	25
2510-01-560-9358	213A	1		167T	19
1005-01-561-0879	198	15		167T	26
5340-01-561-1772	208A	2		169J	19
4210-01-562-0852	266N	11		169J	20
4210-01-562-0854	266P	KIT	5340-01-563-3809	167G	1
5930-01-562-4762	51A	6	5310-01-563-3837	265H	12
2530-01-562-6049	131A	2	5325-01-563-3845	265B	9
2530-01-562-6058	131A	6	2540-01-563-3917	265C	9
2530-01-562-8935	113A	1	5310-01-563-3923	167H	9
	119A	1	2590-01-563-4401	167G	1
4210-01-563-1731	266N	1	2510-01-563-4407	167K	5
5365-01-563-2164	167I	10		170A	5
3040-01-563-2196	167H	6	2510-01-563-4439	167F	12
3020-01-563-2216	265G	12	5340-01-563-4462	265H	5
3020-01-563-2245	265I	1	4710-01-563-4476	266N	7
5340-01-563-2356	167T	27	2510-01-563-4519	167J	1
	169J	22	2540-01-563-4524	265E	12

CROSS REFERENCE INDEXES
NATIONAL STOCK NUMBER

STOCK NUMBER	FIG.	ITEM
2590-01-563-4560	167I	17
	167T	20
	169J	24
5305-01-563-4565	265J	16
5330-01-563-4578	265H	8
2510-01-563-4601	167G	22
5325-01-563-4618	189I	9
	189J	30
	266N	18
5340-01-563-4646	167I	11
	167T	39
	169J	49
2540-01-563-4661	265L	10
2590-01-563-4687	265D	11
5330-01-563-4688	167K	6
5340-01-563-4698	265G	6
5340-01-563-4700	265G	6
2510-01-563-4855	167F	12
5340-01-563-4862	167G	4
	167U	18
5360-01-563-4873	167I	13
	167T	25
	169J	27
2590-01-563-4889	167I	27
5305-01-563-4892	167I	28
5305-01-563-4897	266M	15
2590-01-563-4901	265E	14
5340-01-563-4904	167G	5
	167U	16
5306-01-563-4924	265J	6
2590-01-563-4933	265E	5
5340-01-563-4979	265H	5
2510-01-563-5000	265L	6
2540-01-563-5043	167H	3
	167T	15
	169J	15
2590-01-563-5079	265L	8
2540-01-563-5107	167K	11
3040-01-563-5160	167I	29
	167T	33
	169J	31
2590-01-563-5174	167F	11
2510-01-563-5209	167K	4
2590-01-563-5219	265A	11
3110-01-563-5247	167F	5
5305-01-563-5532	265D	18
2540-01-563-5542	167H	1
5330-01-563-5636	265H	6
2540-01-563-5643	188N	14
2540-01-563-5671	188L	1
5330-01-563-5695	265H	6
2540-01-563-5799	188L	7
2540-01-563-5801	188M	4
2590-01-563-5835	265A	12
2540-01-563-5843	167T	8
	169J	8
2540-01-563-5845	167G	13
2540-01-563-5849	167I	26
	167T	16
	169J	16
2540-01-563-5854	266D	14
2540-01-563-5875	188J	5
2590-01-563-6206	266M	1
2540-01-563-6242	188K	4
2540-01-563-6254	188N	17
2590-01-563-6268	188N	16
1005-01-563-6476	265G	1
1005-01-563-6481	265G	1
5340-01-563-6494	167G	9
2590-01-563-6505	265A	3
2540-01-563-6551	188N	3
	188O	1
2540-01-563-6567	188O	11
2540-01-563-6583	265D	7
5340-01-563-6839	265I	2
2540-01-563-6892	167H	15
	167V	9
2540-01-563-7234	188N	8
6160-01-563-7506	265J	4
6150-01-563-7513	266M	8
2540-01-563-7530	188O	4
5340-01-563-7568	188N	18
2510-01-563-8322	167K	12
2610-01-563-8328	132A	1
5340-01-563-8469	265C	9
2530-01-563-8620	131A	1
2540-01-563-8850	188M	9
2540-01-563-8903	188N	10
5975-01-563-9506	266M	10
5310-01-563-9653	146	6

CROSS REFERENCE INDEXES
NATIONAL STOCK NUMBER

STOCK NUMBER	FIG.	ITEM	STOCK NUMBER	FIG.	ITEM
	163	6		169B	10
	210A	12	2510-01-564-2109	167O	9
	230B	18		169D	4
9905-01-563-9863	265B	8	2540-01-564-2115	265E	1
5340-01-564-0475	169E	28	2540-01-564-2119	169B	5
5305-01-564-0482	169E	8	5310-01-564-2138	167P	20
5340-01-564-0488	169C	10		169F	11
2590-01-564-0498	266F	5	5340-01-564-2148	169G	7
5340-01-564-0500	169C	9	2590-01-564-2161	265A	7
2540-01-564-0509	169E	30	3120-01-564-2279	265E	8
5340-01-564-0513	169D	3	2510-01-564-2280	167F	12
5305-01-564-0589	169E	20	5340-01-564-2281	265F	6
5340-01-564-0751	167P	10	3040-01-564-2311	167R	3
	169F	22	3040-01-564-2313	167R	6
5340-01-564-0772	167Q	9		169I	1
2590-01-564-0773	167P	12	3020-01-564-2317	265G	7
5365-01-564-0776	169G	8	3020-01-564-2324	265G	8
5365-01-564-0781	169F	20	2540-01-564-2326	167P	3
2590-01-564-0785	169H	14	3040-01-564-2366	167P	7
5340-01-564-0794	167P	17	2540-01-564-2407	167N	10
2590-01-564-0820	169H	16		169B	2
5365-01-564-0825	169G	8	5340-01-564-2411	167O	10
2540-01-564-0857	167P	3	5340-01-564-2412	167Q	16
2540-01-564-0903	169B	1	2540-01-564-2552	169I	7
5305-01-564-0964	169I	6	2540-01-564-2759	167N	2
5342-01-564-1200	167R	4	2540-01-564-2765	169B	3
2590-01-564-1208	169I	9	2540-01-564-2774	167P	18
5365-01-564-1212	169F	13	5340-01-564-2788	167O	2
5305-01-564-1213	169H	1		169D	2
5340-01-564-1216	169E	4	5340-01-564-2797	167Q	19
2540-01-564-1235	169I	2	5340-01-564-2816	167N	6
2540-01-564-1236	169F	1		169B	9
2540-01-564-1238	169F	1	5340-01-564-2822	167Q	17
2540-01-564-1246	169F	12	2540-01-564-2842	167N	8
5340-01-564-1263	167N	6	2540-01-564-2875	167M	14
	169B	9		169C	12
5340-01-564-1284	169G	7	2540-01-564-2896	167T	36
2540-01-564-1622	265L	9		169J	34
2540-01-564-1627	167J	1	5315-01-564-2916	167O	6
5310-01-564-1632	265G	3		169D	8
5305-01-564-1659	265H	4	2590-01-564-2918	169E	26
5365-01-564-2001	167P	21	5310-01-564-2919	167Q	4
5340-01-564-2015	169F	18		266F	8
5365-01-564-2060	167P	21	5340-01-564-2921	169H	2
5310-01-564-2063	167N	7	5340-01-564-2924	167Q	19

CROSS REFERENCE INDEXES
NATIONAL STOCK NUMBER

STOCK NUMBER	FIG.	ITEM	STOCK NUMBER	FIG.	ITEM
2540-01-564-2935	167Q	7	4710-01-565-7234	117H	9
5305-01-564-2943	169I	5	2540-01-565-7257	169I	7
5340-01-564-2961	169G	4	2540-01-565-7305	169I	8
5305-01-564-2962	169H	12	5305-01-565-7316	44A	8
2590-01-564-2964	169I	9	5340-01-565-7323	12A	8
5340-01-564-2966	167M	12	2510-01-565-7327	12A	7
5305-01-564-3112	167P	11	2590-01-565-7328	38A	3
	169F	21	2590-01-565-7332	117G	18
5340-01-564-3122	167P	13	2590-01-565-7336	117G	14
	169F	19	5340-01-565-7500	267A	10
2590-01-564-3169	169H	16	4710-01-565-7558	127A	9
2590-01-564-3177	169E	13	5310-01-565-7569	128A	8
5340-01-564-3181	266F	5	2540-01-565-7579	169I	8
5340-01-564-3184	167Q	18	4710-01-565-7581	103A	4
2540-01-564-3188	169B	4	2540-01-565-7586	167Q	7
2510-01-564-3304	167O	9	4710-01-565-7598	117G	3
	169D	4	5342-01-565-7602	12A	3
3020-01-564-3309	265G	12	2530-01-565-7606	134	6
2590-01-564-3310	169H	14	5342-01-565-7609	12A	3
2540-01-564-3312	169F	12	4720-01-565-7612	40A	14
5340-01-564-3316	169E	19	2930-01-565-7623	38A	13
5340-01-564-3354	167M	4	5365-01-565-7625	123A	13
5340-01-564-3368	167M	13	4710-01-565-7633	44A	9
5340-01-564-3380	167M	14	4710-01-565-7642	117H	2
	169C	12	5340-01-565-7654	167Q	6
5340-01-564-3385	167M	13	4710-01-565-7659	117H	10
5340-01-564-3407	169H	6	4710-01-565-7666	117G	5
5365-01-564-3944	169F	14	5315-01-565-7674	124A	3
2540-01-564-3981	167N	1	2590-01-565-7676	201M	17
4730-01-564-6847	103A	1		40	5
	117G	10		40A	3
	117H	16	5342-01-565-7965	38A	22
3040-01-564-8733	167R	6	2930-01-565-7981	38A	14
	169I	1	2930-01-565-7984	44A	15
5340-01-564-8809	145	4	4720-01-565-7987	12A	18
3040-01-565-1351	167I	27	2930-01-565-7991	38A	16
5340-01-565-2595	167P	6	4730-01-565-7997	40A	5
	169F	6	4710-01-565-8003	40A	11
5342-01-565-3848	169I	12	4730-01-565-8006	40A	1
5310-01-565-5271	134	13	4710-01-565-8119	117G	1
	154	9	4720-01-565-8134	40A	6
	201L	31	4720-01-565-8135	40A	4
4710-01-565-7197	103A	5	2930-01-565-8355	44A	16
2930-01-565-7209	38A	19	3040-01-565-8358	44A	3
4710-01-565-7219	117G	4	4730-01-565-8363	39A	14

CROSS REFERENCE INDEXES
NATIONAL STOCK NUMBER

STOCK NUMBER	FIG.	ITEM	STOCK NUMBER	FIG.	ITEM
5305-01-565-8806	44A	4	2530-01-566-1514	134	2
5310-01-565-8828	38A	12	2530-01-566-1525	124A	9
2590-01-565-8851	100A	27	2530-01-566-1534	124A	9
5340-01-565-8860	38A	1	5340-01-566-1548	126A	11
2930-01-565-8878	38A	11	4710-01-566-1567	126A	28
2930-01-565-8887	38A	4	4710-01-566-1660	126A	4
5306-01-565-8902	124A	1	4710-01-566-1672	126A	26
5305-01-565-8910	124A	7	4710-01-566-1676	126A	5
2930-01-565-8925	44A	6	2590-01-566-1785	128A	13
5340-01-565-9172	142A	5	2530-01-566-1790	123A	27
7690-01-565-9187	226A	10	4010-01-566-1797	101A	5
4720-01-565-9204	126A	12	2590-01-566-1809	124A	8
4710-01-565-9209	126A	24	2530-01-566-2481	129	1
4710-01-565-9242	127A	6	2590-01-566-2523	141A	26
2510-01-565-9285	143A	19	2590-01-566-2568	141A	15
2590-01-565-9310	141A	24	5340-01-566-2601	101A	2
2590-01-565-9341	141A	4	5305-01-566-2879	12A	12
2510-01-565-9382	141A	31	4710-01-566-2939	126A	29
5340-01-565-9385	141A	29	2590-01-566-3013	143A	20
2990-01-565-9400	35	9	5340-01-566-3111	226A	5
2590-01-565-9510	143A	22	5360-01-566-3298	123A	26
5340-01-565-9513	209C	4	2590-01-566-3545	142A	8
2510-01-565-9624	144A	1	2590-01-566-3551	142A	8
4710-01-565-9639	127A	11	5365-01-566-3566	126A	16
2530-01-565-9660	125A	6	2590-01-566-3635	144A	20
	125B	8	4720-01-566-3654	126A	7
4710-01-565-9718	127A	1	2590-01-566-3754	143A	18
4710-01-565-9736	127A	13	2510-01-566-3852	142A	1
2510-01-565-9762	143A	5	2590-01-566-3923	127A	14
2590-01-565-9797	142A	25	2590-01-566-3934	142A	16
2930-01-565-9993	38A	23	5340-01-566-3969	141A	2
5340-01-566-0015	141A	3	2590-01-566-4410	141A	15
2590-01-566-0122	128A	5	9330-01-566-4681	BULK	64
2530-01-566-0133	134	5	2530-01-566-6740	KITS	39
2530-01-566-0648	123A	24	9905-01-566-7760	238	12
2510-01-566-0773	143A	3	9905-01-566-7761	239	3
2530-01-566-0968	133	18	9905-01-566-7762	238	12
4720-01-566-0977	12A	17	9905-01-566-7763	239	3
5340-01-566-1120	124A	2	2930-01-566-7785	12A	9
5360-01-566-1150	124A	6	2530-01-566-7801	134	10
2590-01-566-1327	124A	8	2530-01-567-0232	125A	4
2590-01-566-1391	124A	2	2530-01-567-0400	125A	4
5315-01-566-1401	124A	4	2530-01-567-0587	125B	14
2530-01-566-1485	134	16	2530-01-567-0607	125B	14
5310-01-566-1487	12A	13	2530-01-567-0893	125A	3

CROSS REFERENCE INDEXES
NATIONAL STOCK NUMBER

STOCK NUMBER	FIG.	ITEM	STOCK NUMBER	FIG.	ITEM
	125B	3	2510-01-568-7752	170A	15
9905-01-567-3824	239	3	4730-01-568-7803	12A	11
9905-01-567-3825	239	3	5340-01-568-7843	141A	33
9905-01-567-3826	239	3	5340-01-568-7857	167T	6
9905-01-567-3827	239	3		169J	6
9905-01-567-4340	238	12	2510-01-568-7882	170A	10
9905-01-567-4341	238	12	2510-01-568-7896	170A	4
9905-01-567-4342	238	12	3110-01-568-8305	170A	19
9905-01-567-4343	238	12	2590-01-568-8343	167T	1
2510-01-567-5316	141A	10		169J	1
2510-01-567-8695	166B	1	2990-01-568-8367	35	33
2510-01-567-8697	166B	1	5310-01-568-8391	167T	7
2590-01-567-8710	166B	30		169J	7
5365-01-567-8718	166B	4	5340-01-568-8432	141A	32
5365-01-568-0088	166B	3	4730-01-568-8808	12A	10
2990-01-568-0107	35	1	3110-01-568-9378	170A	20
2990-01-568-0722	35	4	2540-01-569-0259	170A	1
5310-01-568-0729	207B	40	5305-01-569-0264	167U	26
2590-01-568-1077	166B	30	2540-01-569-0270	166B	10
5365-01-568-1549	166B	23	5340-01-569-0271	167V	8
5330-01-568-2598	166B	18	5340-01-569-0279	167U	10
5306-01-568-3377	167U	32	2540-01-569-0289	167V	5
2540-01-568-3395	167V	6	2540-01-569-0402	170A	1
5365-01-568-3403	167T	50	5340-01-569-0628	167V	1
	169J	46	5340-01-569-0641	167V	1
5340-01-568-3829	167U	7	2540-01-569-0651	167V	5
2510-01-568-3872	167V	5	2540-01-569-0659	167V	5
5310-01-568-3956	167U	9	2590-01-569-0708	39A	8
2590-01-568-3971	167V	8	2540-01-569-1135	167U	25
5340-01-568-3976	167V	1	2590-01-569-1313	167T	44
2510-01-568-3982	167U	11		169J	42
5365-01-568-4001	167T	51	5340-01-569-1330	167U	10
	169J	47	5340-01-569-1336	167T	6
2540-01-568-4021	167V	6		169J	6
2530-01-568-4462	KITS	71	2510-01-569-1386	170A	4
5305-01-568-4513	167T	21	2590-01-569-1518	167T	1
	169J	21		169J	1
2590-01-568-4571	116A	3	2590-01-569-3285	230B	3
5340-01-568-4874	155A	4	5340-01-569-9478	200C	8
2530-01-568-5097	128A	6	4730-01-569-9915	44A	5
5340-01-568-5727	39A	16	2530-01-570-0763	KITS	72
2540-01-568-6763	167H	15	2540-01-570-2987	230B	6
	167V	9	5310-01-570-7523	141A	25
5340-01-568-7430	167V	8		148	17
5365-01-568-7444	170A	21		149	16

CROSS REFERENCE INDEXES
NATIONAL STOCK NUMBER

STOCK NUMBER	FIG.	ITEM
	201G	13
5305-01-570-8582	205C	3
5340-01-570-8969	205C	13
2990-01-570-8973	KITS	66
5340-01-570-8985	201O	2
2540-01-570-8995	201L	35
2590-01-570-9001	201M	8
5340-01-570-9317	201G	7
5340-01-570-9322	200H	5
5340-01-570-9622	200F	8
2510-01-570-9641	209B	2
2510-01-571-1368	201I	8
7690-01-571-3990	238A	2
7690-01-571-4456	238A	6
7690-01-571-4565	238A	1
5340-01-571-5549	200E	15
2520-01-571-5785	101A	3
5365-01-571-5850	201L	41
7690-01-571-5878	238A	5
7690-01-571-6112	238A	4
5330-01-571-6218	200C	1
5340-01-571-6219	201M	7
5340-01-571-6258	209B	3
2590-01-571-7308	205C	4
2590-01-571-7354	200B	2
5305-01-571-7571	201J	15
7690-01-571-7693	238A	3
5365-01-571-7724	200C	17
5340-01-571-7747	200E	22
2510-01-571-7763	200E	6
5365-01-571-7848	200F	19
5340-01-571-8413	200G	13
2510-01-571-8433	201K	2
5365-01-571-8456	200A	6
5340-01-571-8473	201M	3
2590-01-571-8477	200F	5
5340-01-571-8529	201K	37
5340-01-571-8804	200B	14
4010-01-571-8807	201K	31
9905-01-571-8855	238	12
9905-01-571-8856	239	3
2590-01-571-8884	201O	1
5365-01-571-9831	200F	27
5340-01-572-6307	201I	3
2540-01-573-2494	201G	14
1450-01-573-2660	201K	1
5340-01-573-2730	200B	10
6150-01-573-2775	200G	6
2510-01-573-2854	200E	8
	200E	27
5365-01-573-3381	201G	22
2540-01-573-3780	201H	1
2510-01-573-3898	200E	7
5305-01-573-3907	201I	1
2510-01-573-4328	201G	19
2510-01-573-4712	201G	5
5325-01-573-4721	201H	8
2510-01-573-4728	201I	4
2510-01-573-6414	201K	21
5340-01-573-7882	201J	7
2590-01-573-8363	201K	23
5365-01-573-8386	200B	12
5340-01-573-9422	201K	43
5340-01-573-9427	201P	1
5305-01-573-9435	201L	39
2540-01-573-9444	201L	33
5530-01-573-9469	201L	38
5340-01-573-9486	200A	3
3110-01-573-9774	200A	4
2540-01-574-1950	201E	1
2590-01-574-2934	201K	15
2510-01-574-4191	201K	5
2520-01-574-4828	116A	9
5340-01-574-8286	201H	6
5310-21-921-5930	42B	11

CROSS REFERENCE INDEXES
PART NUMBER

CAGE	PART NUMBER	STOCK NUMBER	FIG.	ITEM
63900	A-100-VC-8	2640-01-098-2029	131A	9
78570	A22673	5305-00-984-4988	256	13
78570	A22673	5305-00-984-4988	260	49
10988	A27365	5331-00-451-0118	102	26
80063	A3014039-5	5995-01-274-5084	237A	1
25472	A31-125	5310-00-952-3567	248	12
44MG9	A52403-7		249E	4
58536	A52425-1	5940-00-549-6581	66	15
53964	A609015	5306-01-190-4553	31	3
53964	A618017	5331-01-335-7592	31	8
53964	A630003	2910-01-218-4489	KITS	1
58536	A-A-52506-F-12	4730-00-908-3194	37	7
58536	A-A-52506-F-12	4730-00-908-3194	138A	29
58536	A-A-52506-F-32	4730-00-204-3491	40	1
58536	A-A-52506-F-32	4730-00-204-3491	139	6
58536	AA52506-F-36	4730-00-909-8627	29	19
58536	AA52506-F-36	4730-00-909-8627	40	8
58536	AA52506-F-36	4730-00-909-8627	266F	6
58536	AA52506-F-36	4730-00-909-8627	274A	3
58536	A-A-52506-F-48	4730-00-908-6292	20	16
58536	A-A-52506-F-48	4730-00-908-6292	35	2
58536	A-A-52506-F-48	4730-00-908-6292	138A	16
58536	AA52506-F-52	4730-00-202-8967	228A	25
58536	A-A-52525-21	2590-00-683-0598	65	5
58536	AA52536-3	5999-00-926-3144	249A	23
20669	AA52550-1	2540-01-189-2193	150	6
58536	AA55571/01/001	5925-01-430-2318	225F	6
58536	AA55571/01-001	5925-01-430-2318	53	3
58536	AA55571/01-001	5925-01-430-2318	229	4
58536	AA55571/01-001	5925-01-430-2318	249B	5
58536	AA55571/01-001	5925-01-430-2318	252H	3
58536	AA55571/01-004	5925-00-333-1584	274B	3
58536	AA55571/02-001	5925-00-894-8015	56	13
58536	AA59440/1-004	4820-00-752-9040	40	9
58536	AA59440/1-004	4820-00-752-9040	40A	10
58536	AA59616AASBCC	4730-00-187-4202	3	15
052C4	ABA19017	4730-01-523-4084	21	2
052C4	ABA19017	4730-01-523-4084	140	10
54402	AD42BS		206	17
05047	AES18C190A00BB3A91		205C	1
05047	AES18C250A50BB3A91	5305-01-570-8582	205C	3
05047	AEW26X56N062BD6A81		201K	25
78276	AKS4-420-165	5325-01-408-8466	189A	6
78276	AKS4-420-165	5325-01-408-8466	189B	23
78276	AKS4-420-260	5325-01-548-2516	207B	25

CROSS REFERENCE INDEXES
PART NUMBER

CAGE	PART NUMBER	STOCK NUMBER	FIG.	ITEM
78276	AKS4-420-260	5325-01-548-2516	209C	7
78276	AKS4-632-130	5325-01-436-4285	204A	15
78276	AKS9-420-260		205B	7
19220	AL-16875-SS85	5310-01-564-2138	167P	20
19220	AL-16875-SS85	5310-01-564-2138	169F	11
78276	ALS4-1024-130	5325-01-411-0066	180	5
78276	ALS4-1024-130	5325-01-411-0066	203	8
78276	ALS4-1024-130	5325-01-411-0066	205	6
78276	ALS4-1024-130	5325-01-411-0066	209	6
78276	ALS4-1024-130	5325-01-411-0066	212	47
78276	ALS4-1024-130	5325-01-411-0066	204B	29
78276	ALS4-1024-130	5325-01-411-0066	205A	7
78276	ALS4-1024-130	5325-01-411-0066	210A	26
78276	ALS4-1024-225	5325-01-475-9697	205	13
78276	ALS4-1024-225	5325-01-475-9697	166B	7
78276	ALS4-1024-225	5325-01-475-9697	200B	5
78276	ALS4-1024-225	5325-01-475-9697	204A	45
78276	ALS4-1024-225	5325-01-475-9697	205A	10
78276	ALS4-1024-225	5325-01-475-9697	223A	14
78276	ALS4-1024-225	5325-01-475-9697	51A	13
78276	ALS4-420-165	5310-01-411-3422	29	26
78276	ALS4-420-165	5310-01-411-3422	234	1
78276	ALS4-420-165	5310-01-411-3422	189J	6
78276	ALS4-420-165	5310-01-411-3422	204A	14
78276	ALS4-420-165	5310-01-411-3422	204B	24
78276	ALS4-420-165	5310-01-411-3422	207B	44
78276	ALS4-420-165	5310-01-411-3422	213A	28
78276	ALS4-420-260	5325-01-395-1247	193	17
78276	ALS4-420-260	5325-01-395-1247	195	8
78276	ALS4-420-260	5325-01-395-1247	70A	3
78276	ALS4-518-150	5310-01-413-3276	212	32
78276	ALS4-518-150	5310-01-413-3276	201O	10
78276	ALS4-518-150	5310-01-413-3276	210A	16
78276	ALS4-518-312	5320-01-505-0478	208A	1
78276	ALS4-518-312	5320-01-505-0478	249F	9
78276	ALS4-616-150	5325-01-483-7480	200H	13
78276	ALS4-616-312	5325-01-459-5008	174	3
78276	ALS4-616-312	5325-01-459-5008	175	3
78276	ALS7-1032-130	5325-01-420-3005	185	13
78276	ALS7-1032-130	5325-01-420-3005	205	34
78276	ALS7-1032-130	5325-01-420-3005	207	36
78276	ALS7-1032-130	5325-01-420-3005	224	4
78276	ALS7-420-165	5325-01-394-2414	54	7
78276	ALS7-420-165	5325-01-394-2414	169	6
78276	ALS7-420-165	5325-01-394-2414	172	1

CROSS REFERENCE INDEXES
PART NUMBER

CAGE	PART NUMBER	STOCK NUMBER	FIG.	ITEM
78276	ALS7-420-165	5325-01-394-2414	180	8
78276	ALS7-420-165	5325-01-394-2414	183	17
78276	ALS7-420-165	5325-01-394-2414	184	3
78276	ALS7-420-165	5325-01-394-2414	185	2
78276	ALS7-420-165	5325-01-394-2414	186	2
78276	ALS7-420-165	5325-01-394-2414	188	2
78276	ALS7-420-165	5325-01-394-2414	189	4
78276	ALS7-420-165	5325-01-394-2414	190	10
78276	ALS7-420-165	5325-01-394-2414	192	14
78276	ALS7-420-165	5325-01-394-2414	201	14
78276	ALS7-420-165	5325-01-394-2414	206	12
78276	ALS7-420-165	5325-01-394-2414	219	8
78276	ALS7-420-165	5325-01-394-2414	223	17
78276	ALS7-420-165	5325-01-394-2414	269A	4
78276	ALS7-420-260	5325-01-395-1247	194	14
78276	ALS7-420-260	5325-01-395-1247	288	8
78276	ALS7-616-150	5325-01-474-9732	182	23
78276	ALS7-616-150	5325-01-474-9732	195	4
78276	ALS7-616-150	5325-01-474-9732	189G	11
78276	ALS7-616-150	5325-01-474-9732	189H	1
78276	ALS7-616-150	5325-01-474-9732	189O	17
78276	ALS7-632-80	5325-01-465-0001	209	14
19207	ALS9-420-165	5210-01-411-3422	183	16
19207	ALS9-420-165	5210-01-411-3422	223	17
19207	ALS9-420-165	5210-01-411-3422	235A	6
78276	ALS9B-616-312	5325-01-563-4618	189I	9
78276	ALS9B-616-312	5325-01-563-4618	189J	30
78276	ALS9B-616-312	5325-01-563-4618	266N	18
17446	AMGLP-B6-4	5320-01-271-6357	216	9
17446	AMGLP-B6-4	5320-01-271-6357	208A	27
17446	AMGLP-B6-4	5320-01-271-6357	217B	10
88044	AN365-1024A	5310-00-208-1918	160	32
88044	AN365-1024A	5310-00-208-1918	161	28
88044	AN365-1024A	5310-00-208-1918	164	12
88044	AN365-1024A	5310-00-208-1918	201B	27
88044	AN5H10A	5306-00-182-2027	157	23
88044	AN5H10A	5306-00-182-2027	158	44
88044	AN5H10A	5306-00-182-2027	227	12
88044	AN5H41	5306-00-292-8253	200	23
88044	AN5H41	5306-00-292-8253	196D	37
88044	AN5H6A	5306-00-182-2025	158	6
88044	AN5H6A	5306-00-182-2025	158	45
88044	AN5H7	5306-00-180-2748	227D	32
88044	AN6-16A	5306-00-208-3639	201B	11
88044	AN6-16A	5306-00-208-3639	201L	20

CAGE	PART NUMBER	STOCK NUMBER	FIG.	ITEM
55719	AN8506-4	5120-00-184-8398	299	1
88044	AN960-416L	5310-00-167-0835	201B	2
88044	AN960-516L	5310-00-167-0836	201B	17
88044	AN960-516L	5310-00-167-0836	201L	18
88044	AN960-616L	5310-00-167-0837	201B	10
88044	AN960-616L	5310-00-167-0837	201L	5
88044	AN960-816	5310-00-167-0823	158	21
87585	ANA9-5	5325-00-276-6228	233	34
87585	ANA9-5	5325-00-276-6228	268	4
80204	ANSI B18.6.3	5305-00-958-5247	189G	2
81343	AS15001-1	4730-00-050-4203	108	9
81343	AS15001-1	4730-00-050-4203	108	17
81343	AS15001-1	4730-00-050-4203	109	3
81343	AS15001-1	4730-00-050-4203	114	9
81343	AS15001-1	4730-00-050-4203	114	18
81343	AS15001-1	4730-00-050-4203	120	9
81343	AS15001-1	4730-00-050-4203	120	18
81343	AS15001-1	4730-00-050-4203	134	4
81343	AS15001-1	4730-00-050-4203	134	7
81343	AS15001-3	4730-00-050-4205	134	11
81343	AS15001-3	4730-00-050-4205	134	17
81343	AS15001-3	4730-00-050-4205	154	7
81343	AS15001-4	4730-00-050-4207	150	23
81343	AS568-113	5330-01-184-6492	252	6
81343	AS954TY1CL1STBDR3/8SZ3/8	5120-00-142-5152	290	2
4B8D1	ASM000125	6150-01-560-0279	265J	19
4B8D1	ASM000127	6150-01-560-0249	265H	14
4B8D1	ASM000130	6150-01-560-0255	265K	4
4B8D1	ASM000131	6150-01-560-0284	265J	18
4B8D1	ASM000134	6150-01-560-0238	265H	16
4B8D1	ASM000216	6150-01-560-0297	265H	13
05047	ASME B18.6.3	5305-00-957-6269	204A	6
05047	ASME B18.6.3	5305-00-957-6269	205C	14
78276	ATS2-813	5325-01-409-0211	141	11
78276	ATS2-813	5325-01-409-0211	201K	8
73281	B0625-22-S	5310-01-203-3230	196B	9
80204	B18212HRCZ080	5310-01-478-5620	138B	10
80204	B18212HRCZ080	5310-01-478-5620	249B	7
80204	B1821BH025C038N	5305-00-071-2508	201G	28
80204	B1821BH025C044N	5305-00-071-2507	25	1
80204	B1821BH025C050N	5305-00-071-2506	249	33
80204	B1821BH025C050N	5305-00-071-2506	12A	6
80204	B1821BH025C050N	5305-00-071-2506	167I	9
80204	B1821BH025C050N	5305-00-071-2506	167P	8
80204	B1821BH025C050N	5305-00-071-2506	223A	13

CROSS REFERENCE INDEXES
PART NUMBER

CAGE	PART NUMBER	STOCK NUMBER	FIG.	ITEM
80204	B1821BH025C063N	5305-00-068-7837	12	11
80204	B1821BH025C063N	5305-00-068-7837	38	6
80204	B1821BH025C063N	5305-00-068-7837	51	27
80204	B1821BH025C063N	5305-00-068-7837	123	11
80204	B1821BH025C063N	5305-00-068-7837	139	13
80204	B1821BH025C063N	5305-00-068-7837	140	5
80204	B1821BH025C063N	5305-00-068-7837	156	23
80204	B1821BH025C063N	5305-00-068-7837	158	42
80204	B1821BH025C063N	5305-00-068-7837	180	13
80204	B1821BH025C063N	5305-00-068-7837	198	26
80204	B1821BH025C063N	5305-00-068-7837	203	3
80204	B1821BH025C063N	5305-00-068-7837	138A	18
80204	B1821BH025C063N	5305-00-068-7837	167H	12
80204	B1821BH025C063N	5305-00-068-7837	167H	19
80204	B1821BH025C063N	5305-00-068-7837	167T	10
80204	B1821BH025C063N	5305-00-068-7837	169J	10
80204	B1821BH025C063N	5305-00-068-7837	170A	22
80204	B1821BH025C063N	5305-00-068-7837	196C	1
80204	B1821BH025C063N	5305-00-068-7837	220A	6
80204	B1821BH025C063N	5305-00-068-7837	51A	24
80204	B1821BH025C075N	5305-00-068-0508	29	14
80204	B1821BH025C075N	5305-00-068-0508	31	17
80204	B1821BH025C075N	5305-00-068-0508	35	11
80204	B1821BH025C075N	5305-00-068-0508	37	9
80204	B1821BH025C075N	5305-00-068-0508	40	6
80204	B1821BH025C075N	5305-00-068-0508	49	6
80204	B1821BH025C075N	5305-00-068-0508	65	1
80204	B1821BH025C075N	5305-00-068-0508	72	12
80204	B1821BH025C075N	5305-00-068-0508	100	13
80204	B1821BH025C075N	5305-00-068-0508	112	14
80204	B1821BH025C075N	5305-00-068-0508	161	11
80204	B1821BH025C075N	5305-00-068-0508	162	12
80204	B1821BH025C075N	5305-00-068-0508	165	2
80204	B1821BH025C075N	5305-00-068-0508	182	1
80204	B1821BH025C075N	5305-00-068-0508	205	31
80204	B1821BH025C075N	5305-00-068-0508	206	21
80204	B1821BH025C075N	5305-00-068-0508	207	15
80204	B1821BH025C075N	5305-00-068-0508	225	2
80204	B1821BH025C075N	5305-00-068-0508	228	47
80204	B1821BH025C075N	5305-00-068-0508	232	29
80204	B1821BH025C075N	5305-00-068-0508	233	10
80204	B1821BH025C075N	5305-00-068-0508	250	7
80204	B1821BH025C075N	5305-00-068-0508	252	14
80204	B1821BH025C075N	5305-00-068-0508	284	2
80204	B1821BH025C075N	5305-00-068-0508	100A	8

CAGE	PART NUMBER	STOCK NUMBER	FIG.	ITEM
80204	B1821BH025C075N	5305-00-068-0508	117H	12
80204	B1821BH025C075N	5305-00-068-0508	164A	5
80204	B1821BH025C075N	5305-00-068-0508	167G	16
80204	B1821BH025C075N	5305-00-068-0508	196G	7
80204	B1821BH025C075N	5305-00-068-0508	200E	20
80204	B1821BH025C075N	5305-00-068-0508	200F	11
80204	B1821BH025C075N	5305-00-068-0508	200H	37
80204	B1821BH025C075N	5305-00-068-0508	201G	1
80204	B1821BH025C075N	5305-00-068-0508	202D	8
80204	B1821BH025C075N	5305-00-068-0508	204B	30
80204	B1821BH025C075N	5305-00-068-0508	205A	29
80204	B1821BH025C075N	5305-00-068-0508	207A	37
80204	B1821BH025C075N	5305-00-068-0508	228A	46
80204	B1821BH025C075N	5305-00-068-0508	237A	7
80204	B1821BH025C075N	5305-00-068-0508	40A	7
80204	B1821BH025C075N	5305-00-068-0508	70A	6
80204	B1821BH025C088N	5305-00-071-2505	83	2
80204	B1821BH025C088N	5305-00-071-2505	84	14
80204	B1821BH025C088N	5305-00-071-2505	160	17
80204	B1821BH025C088N	5305-00-071-2505	170	19
80204	B1821BH025C088N	5305-00-071-2505	181	18
80204	B1821BH025C088N	5305-00-071-2505	182	12
80204	B1821BH025C088N	5305-00-071-2505	123A	2
80204	B1821BH025C088N	5305-00-071-2505	126A	8
80204	B1821BH025C088N	5305-00-071-2505	166A	54
80204	B1821BH025C088N	5305-00-071-2505	166B	32
80204	B1821BH025C088N	5305-00-071-2505	167B	54
80204	B1821BH025C088N	5305-00-071-2505	167H	13
80204	B1821BH025C088N	5305-00-071-2505	167H	20
80204	B1821BH025C088N	5305-00-071-2505	167I	21
80204	B1821BH025C088N	5305-00-071-2505	167T	29
80204	B1821BH025C088N	5305-00-071-2505	167T	34
80204	B1821BH025C088N	5305-00-071-2505	169J	26
80204	B1821BH025C088N	5305-00-071-2505	169J	32
80204	B1821BH025C088N	5305-00-071-2505	200F	18
80204	B1821BH025C088N	5305-00-071-2505	200G	11
80204	B1821BH025C088N	5305-00-071-2505	200H	7
80204	B1821BH025C088N	5305-00-071-2505	201K	33
80204	B1821BH025C088N	5305-00-071-2505	201M	5
80204	B1821BH025C088N	5305-00-071-2505	201N	2
80204	B1821BH025C088N	5305-00-071-2505	207A	6
80204	B1821BH025C088N	5305-00-071-2505	207B	14
80204	B1821BH025C088N	5305-00-071-2505	209B	8
80204	B1821BH025C088N	5305-00-071-2505	38A	8
80204	B1821BH025C100N	5305-00-225-3843	33	18

CAGE	PART NUMBER	STOCK NUMBER	FIG.	ITEM
80204	B1821BH025C100N	5305-00-225-3843	65	14
80204	B1821BH025C100N	5305-00-225-3843	118	13
80204	B1821BH025C100N	5305-00-225-3843	121	5
80204	B1821BH025C100N	5305-00-225-3843	133	11
80204	B1821BH025C100N	5305-00-225-3843	139	21
80204	B1821BH025C100N	5305-00-225-3843	142	15
80204	B1821BH025C100N	5305-00-225-3843	160	10
80204	B1821BH025C100N	5305-00-225-3843	161	1
80204	B1821BH025C100N	5305-00-225-3843	162	24
80204	B1821BH025C100N	5305-00-225-3843	171	8
80204	B1821BH025C100N	5305-00-225-3843	179	11
80204	B1821BH025C100N	5305-00-225-3843	182	9
80204	B1821BH025C100N	5305-00-225-3843	183	14
80204	B1821BH025C100N	5305-00-225-3843	183	22
80204	B1821BH025C100N	5305-00-225-3843	184	2
80204	B1821BH025C100N	5305-00-225-3843	185	6
80204	B1821BH025C100N	5305-00-225-3843	186	3
80204	B1821BH025C100N	5305-00-225-3843	188	17
80204	B1821BH025C100N	5305-00-225-3843	189	5
80204	B1821BH025C100N	5305-00-225-3843	192	3
80204	B1821BH025C100N	5305-00-225-3843	193	1
80204	B1821BH025C100N	5305-00-225-3843	200	7
80204	B1821BH025C100N	5305-00-225-3843	202	14
80204	B1821BH025C100N	5305-00-225-3843	206	13
80204	B1821BH025C100N	5305-00-225-3843	208	22
80204	B1821BH025C100N	5305-00-225-3843	209	13
80204	B1821BH025C100N	5305-00-225-3843	211	1
80204	B1821BH025C100N	5305-00-225-3843	213	24
80204	B1821BH025C100N	5305-00-225-3843	219	7
80204	B1821BH025C100N	5305-00-225-3843	223	9
80204	B1821BH025C100N	5305-00-225-3843	234	3
80204	B1821BH025C100N	5305-00-225-3843	235	2
80204	B1821BH025C100N	5305-00-225-3843	236	16
80204	B1821BH025C100N	5305-00-225-3843	237	30
80204	B1821BH025C100N	5305-00-225-3843	275	12
80204	B1821BH025C100N	5305-00-225-3843	283	11
80204	B1821BH025C100N	5305-00-225-3843	284	13
80204	B1821BH025C100N	5305-00-225-3843	167G	19
80204	B1821BH025C100N	5305-00-225-3843	167I	14
80204	B1821BH025C100N	5305-00-225-3843	167K	2
80204	B1821BH025C100N	5305-00-225-3843	167U	28
80204	B1821BH025C100N	5305-00-225-3843	170A	11
80204	B1821BH025C100N	5305-00-225-3843	189B	28
80204	B1821BH025C100N	5305-00-225-3843	196D	23
80204	B1821BH025C100N	5305-00-225-3843	201N	3

CAGE	PART NUMBER	STOCK NUMBER	FIG.	ITEM
80204	B1821BH025C100N	5305-00-225-3843	202A	5
80204	B1821BH025C100N	5305-00-225-3843	204B	7
80204	B1821BH025C100N	5305-00-225-3843	205B	4
80204	B1821BH025C100N	5305-00-225-3843	208A	24
80204	B1821BH025C100N	5305-00-225-3843	209C	1
80204	B1821BH025C100N	5305-00-225-3843	210B	2
80204	B1821BH025C100N	5305-00-225-3843	213A	3
80204	B1821BH025C100N	5305-00-225-3843	223A	1
80204	B1821BH025C100N	5305-00-225-3843	225K	5
80204	B1821BH025C100N	5305-00-225-3843	235A	3
80204	B1821BH025C100N	5305-00-225-3843	237A	3
80204	B1821BH025C100N	5305-00-225-3843	252D	7
80204	B1821BH025C113N	5305-00-225-3842	140	23
80204	B1821BH025C113N	5305-00-225-3842	160	16
80204	B1821BH025C113N	5305-00-225-3842	161	5
80204	B1821BH025C113N	5305-00-225-3842	12A	24
80204	B1821BH025C113N	5305-00-225-3842	201K	47
80204	B1821BH025C113N	5305-00-225-3842	207B	13
80204	B1821BH025C113N	5305-00-225-3842	266N	21
80204	B1821BH025C125N	5305-00-068-0509	12	29
80204	B1821BH025C125N	5305-00-068-0509	25	58
80204	B1821BH025C125N	5305-00-068-0509	157	7
80204	B1821BH025C125N	5305-00-068-0509	180	2
80204	B1821BH025C125N	5305-00-068-0509	181	5
80204	B1821BH025C125N	5305-00-068-0509	186	8
80204	B1821BH025C125N	5305-00-068-0509	223	2
80204	B1821BH025C125N	5305-00-068-0509	266	9
80204	B1821BH025C125N	5305-00-068-0509	189G	5
80204	B1821BH025C125N	5305-00-068-0509	189J	35
80204	B1821BH025C125N	5305-00-068-0509	204A	33
80204	B1821BH025C125N	5305-00-068-0509	207A	10
80204	B1821BH025C125N	5305-00-068-0509	213A	25
80204	B1821BH025C125N	5305-00-068-0509	227D	11
80204	B1821BH025C125N	5305-00-068-0509	266I	15
80204	B1821BH025C125N	5305-00-068-0509	287B	2
80204	B1821BH025C138N	5305-00-225-3841	189J	21
80204	B1821BH025C138N	5305-00-225-3841	189N	14
80204	B1821BH025C150N	5305-00-071-2509	25	48
80204	B1821BH025C150N	5305-00-071-2509	33	31
80204	B1821BH025C150N	5305-00-071-2509	54	4
80204	B1821BH025C150N	5305-00-071-2509	212	40
80204	B1821BH025C150N	5305-00-071-2509	264	4
80204	B1821BH025C150N	5305-00-071-2509	167U	24
80204	B1821BH025C150N	5305-00-071-2509	189E	17
80204	B1821BH025C150N	5305-00-071-2509	201G	8

CAGE	PART NUMBER	STOCK NUMBER	FIG.	ITEM
80204	B1821BH025C150N	5305-00-071-2509	201K	27
80204	B1821BH025C150N	5305-00-071-2509	266I	14
80204	B1821BH025C150N	5305-00-071-2509	276G	9
80204	B1821BH025C150N	5305-00-071-2509	288A	3
80204	B1821BH025C175N	5305-00-071-2510	235	16
80204	B1821BH025C175N	5305-00-071-2510	117B	7
80204	B1821BH025C175N	5305-00-071-2510	201M	12
80204	B1821BH025C175N	5305-00-071-2510	235A	15
80204	B1821BH025C200N	5305-00-071-2511	188	14
80204	B1821BH025C200N	5305-00-071-2511	189	8
80204	B1821BH025C200N	5305-00-071-2511	208	38
80204	B1821BH025C200N	5305-00-071-2511	117F	6
80204	B1821BH025C200N	5305-00-071-2511	225K	10
80204	B1821BH025C225N	5305-00-071-2512	189O	19
80204	B1821BH025C250N	5305-00-071-2513	208	28
80204	B1821BH025C250N	5305-00-071-2513	116A	13
80204	B1821BH025C250N	5305-00-071-2513	167G	2
80204	B1821BH025C250N	5305-00-071-2513	188J	1
80204	B1821BH025C250N	5305-00-071-2513	188K	5
80204	B1821BH025C250N	5305-00-071-2513	209B	9
80204	B1821BH025C275N	5305-00-071-2514	167C	5
80204	B1821BH025C350N	5305-00-071-2517	188J	6
80204	B1821BH025C350N	5305-00-071-2517	188K	7
80204	B1821BH025C450N	5305-01-202-2676	123	16
80204	B1821BH025F063N	5305-00-267-8953	201B	1
80204	B1821BH025F063N	5305-00-267-8953	201L	4
80204	B1821BH025F075N	5306-00-068-0513	56	11
80204	B1821BH025F075N	5306-00-068-0513	65	6
80204	B1821BH031C056N	5306-00-226-4823	113	36
80204	B1821BH031C056N	5306-00-226-4823	119	36
80204	B1821BH031C063N	5306-00-226-4824	117	23
80204	B1821BH031C063N	5306-00-226-4824	267	21
80204	B1821BH031C063N	5306-00-226-4824	167T	2
80204	B1821BH031C063N	5306-00-226-4824	169J	4
80204	B1821BH031C063N	5306-00-226-4824	196B	18
80204	B1821BH031C063N	5306-00-226-4824	265A	9
80204	B1821BH031C075N	5306-00-226-4825	31	21
80204	B1821BH031C075N	5306-00-226-4825	126	10
80204	B1821BH031C075N	5306-00-226-4825	220	6
80204	B1821BH031C075N	5306-00-226-4825	266	16
80204	B1821BH031C075N	5306-00-226-4825	126A	30
80204	B1821BH031C075N	5306-00-226-4825	167H	17
80204	B1821BH031C075N	5306-00-226-4825	167V	7
80204	B1821BH031C075N	5306-00-226-4825	169J	29
80204	B1821BH031C075N	5306-00-226-4825	249E	6

CAGE	PART NUMBER	STOCK NUMBER	FIG.	ITEM
80204	B1821BH031C075N	5306-00-226-4825	44A	12
80204	B1821BH031C088N	5306-00-226-4826	167C	15
80204	B1821BH031C088N	5306-00-226-4826	167H	27
80204	B1821BH031C088N	5306-00-226-4826	167V	4
80204	B1821BH031C088N	5306-00-226-4826	189E	14
80204	B1821BH031C088N	5306-00-226-4826	196B	7
80204	B1821BH031C088N	5306-00-226-4826	196D	7
80204	B1821BH031C100N	5306-00-226-4827	70	1
80204	B1821BH031C100N	5306-00-226-4827	210	4
80204	B1821BH031C100N	5306-00-226-4827	212	29
80204	B1821BH031C100N	5306-00-226-4827	217	3
80204	B1821BH031C100N	5306-00-226-4827	230	3
80204	B1821BH031C100N	5306-00-226-4827	123A	14
80204	B1821BH031C100N	5306-00-226-4827	142A	6
80204	B1821BH031C100N	5306-00-226-4827	164A	18
80204	B1821BH031C100N	5306-00-226-4827	201L	28
80204	B1821BH031C100N	5306-00-226-4827	207B	10
80204	B1821BH031C100N	5306-00-226-4827	210A	13
80204	B1821BH031C100N	5306-00-226-4827	217A	3
80204	B1821BH031C100N	5306-00-226-4827	230A	3
80204	B1821BH031C100N	5306-00-226-4827	230B	19
80204	B1821BH031C100N	5306-00-226-4827	249F	7
80204	B1821BH031C100N	5306-00-226-4827	266J	22
80204	B1821BH031C100N	5306-00-226-4827	266L	3
80204	B1821BH031C100N	5306-00-226-4827	266N	12
80204	B1821BH031C100N	5306-00-226-4827	266O	1
80204	B1821BH031C113N	5306-00-226-4828	126	23
80204	B1821BH031C113N	5306-00-226-4828	127	14
80204	B1821BH031C113N	5306-00-226-4828	208	4
80204	B1821BH031C113N	5306-00-226-4828	212	2
80204	B1821BH031C113N	5306-00-226-4828	246	23
80204	B1821BH031C113N	5306-00-226-4828	248	22
80204	B1821BH031C113N	5306-00-226-4828	262	1
80204	B1821BH031C113N	5306-00-226-4828	126A	34
80204	B1821BH031C113N	5306-00-226-4828	138C	1
80204	B1821BH031C113N	5306-00-226-4828	189M	12
80204	B1821BH031C113N	5306-00-226-4828	227D	29
80204	B1821BH031C113N	5306-00-226-4828	227D	34
80204	B1821BH031C125N	5306-00-226-4829	14	1
80204	B1821BH031C125N	5306-00-226-4829	212	26
80204	B1821BH031C125N	5306-00-226-4829	167C	6
80204	B1821BH031C125N	5306-00-226-4829	167F	16
80204	B1821BH031C125N	5306-00-226-4829	167H	34
80204	B1821BH031C125N	5306-00-226-4829	169C	1
80204	B1821BH031C125N	5306-00-226-4829	189N	7

CROSS REFERENCE INDEXES
PART NUMBER

CAGE	PART NUMBER	STOCK NUMBER	FIG.	ITEM
80204	B1821BH031C125N	5306-00-226-4829	201O	7
80204	B1821BH031C125N	5306-00-226-4829	202B	21
80204	B1821BH031C125N	5306-00-226-4829	202D	5
80204	B1821BH031C125N	5306-00-226-4829	202E	1
80204	B1821BH031C125N	5306-00-226-4829	210A	8
80204	B1821BH031C125N	5306-00-226-4829	249B	21
80204	B1821BH031C150N	5305-00-226-4831	36	5
80204	B1821BH031C150N	5305-00-226-4831	167	18
80204	B1821BH031C150N	5305-00-226-4831	179	3
80204	B1821BH031C150N	5305-00-226-4831	205	19
80204	B1821BH031C150N	5305-00-226-4831	210	5
80204	B1821BH031C150N	5305-00-226-4831	167G	12
80204	B1821BH031C150N	5305-00-226-4831	189E	8
80204	B1821BH031C150N	5305-00-226-4831	195D	13
80204	B1821BH031C150N	5305-00-226-4831	204B	12
80204	B1821BH031C150N	5305-00-226-4831	205A	16
80204	B1821BH031C150N	5305-00-226-4831	230A	21
80204	B1821BH031C150N	5305-00-226-4831	265F	4
80204	B1821BH031C175N	5306-00-226-4832	169H	3
80204	B1821BH031C175N	5306-00-226-4832	230B	13
80204	B1821BH031C175N	5306-00-226-4832	266P	2
80204	B1821BH031C200N	5306-00-226-4833	162	17
80204	B1821BH031C200N	5306-00-226-4833	195F	12
80204	B1821BH031C225N	5306-00-226-4834	195D	15
80204	B1821BH031C225N	5306-00-226-4834	195E	6
80204	B1821BH031C225N	5306-00-226-4834	201L	42
80204	B1821BH031C275N	5306-00-226-4836	167Q	12
80204	B1821BH031C275N	5306-00-226-4836	167T	12
80204	B1821BH031C275N	5306-00-226-4836	169J	12
80204	B1821BH031C300N	5306-00-226-4837	167O	1
80204	B1821BH031C300N	5306-00-226-4837	169D	1
80204	B1821BH031C300N	5306-00-226-4837	169F	5
80204	B1821BH031C325N	5306-00-226-4838	146	3
80204	B1821BH031C325N	5306-00-226-4838	167H	23
80204	B1821BH031C325N	5306-00-226-4838	167U	6
80204	B1821BH031C325N	5306-00-226-4838	189E	11
80204	B1821BH031C325N	5306-00-226-4838	195E	4
80204	B1821BH031C350N	5306-00-226-4839	167P	4
80204	B1821BH031C425N	5306-00-226-4842	202E	5
80204	B1821BH031C450N	5306-00-226-4843	169D	11
80204	B1821BH031C500N	5306-00-226-4845	169H	17
80204	B1821BH031F063N	5306-00-050-1237	196G	37
80204	B1821BH031F075N	5306-00-050-1238	168	6
80204	B1821BH031F100N	5305-00-051-4076	168	16
80204	B1821BH031F113N	5306-00-051-4077	208A	6

CAGE	PART NUMBER	STOCK NUMBER	FIG.	ITEM
80204	B1821BH038C063N	5305-00-721-5492	205	35
80204	B1821BH038C063N	5305-00-721-5492	167R	1
80204	B1821BH038C063N	5305-00-721-5492	201C	6
80204	B1821BH038C063N	5305-00-721-5492	265A	1
80204	B1821BH038C075N	5305-00-543-4372	25	52
80204	B1821BH038C075N	5305-00-543-4372	57	1
80204	B1821BH038C075N	5305-00-543-4372	58	1
80204	B1821BH038C075N	5305-00-543-4372	72	15
80204	B1821BH038C075N	5305-00-543-4372	173	10
80204	B1821BH038C075N	5305-00-543-4372	176	9
80204	B1821BH038C075N	5305-00-543-4372	192	2
80204	B1821BH038C075N	5305-00-543-4372	201	16
80204	B1821BH038C075N	5305-00-543-4372	232	4
80204	B1821BH038C075N	5305-00-543-4372	195J	10
80204	B1821BH038C075N	5305-00-543-4372	200C	10
80204	B1821BH038C075N	5305-00-543-4372	200F	20
80204	B1821BH038C075N	5305-00-543-4372	44A	17
80204	B1821BH038C088N	5305-01-140-9118	137	7
80204	B1821BH038C088N	5305-01-140-9118	198	8
80204	B1821BH038C088N	5305-01-140-9118	253	25
80204	B1821BH038C088N	5305-01-140-9118	200E	21
80204	B1821BH038C100N	5305-00-068-0510	2	6
80204	B1821BH038C100N	5305-00-068-0510	35	28
80204	B1821BH038C100N	5305-00-068-0510	36	9
80204	B1821BH038C100N	5305-00-068-0510	45	13
80204	B1821BH038C100N	5305-00-068-0510	113	15
80204	B1821BH038C100N	5305-00-068-0510	119	15
80204	B1821BH038C100N	5305-00-068-0510	137	6
80204	B1821BH038C100N	5305-00-068-0510	200	14
80204	B1821BH038C100N	5305-00-068-0510	103A	6
80204	B1821BH038C100N	5305-00-068-0510	128A	9
80204	B1821BH038C100N	5305-00-068-0510	167I	22
80204	B1821BH038C100N	5305-00-068-0510	189A	22
80204	B1821BH038C100N	5305-00-068-0510	189C	6
80204	B1821BH038C100N	5305-00-068-0510	189I	27
80204	B1821BH038C100N	5305-00-068-0510	196C	24
80204	B1821BH038C100N	5305-00-068-0510	196D	47
80204	B1821BH038C100N	5305-00-068-0510	196G	5
80204	B1821BH038C100N	5305-00-068-0510	200H	2
80204	B1821BH038C100N	5305-00-068-0510	201C	20
80204	B1821BH038C100N	5305-00-068-0510	201M	1
80204	B1821BH038C100N	5305-00-068-0510	225A	9
80204	B1821BH038C100N	5305-00-068-0510	265B	17
80204	B1821BH038C100N	5305-00-068-0510	265C	2
80204	B1821BH038C100N	5305-00-068-0510	265D	19

CAGE	PART NUMBER	STOCK NUMBER	FIG.	ITEM
80204	B1821BH038C100N	5305-00-068-0510	266B	6
80204	B1821BH038C100N	5305-00-068-0510	266C	3
80204	B1821BH038C100N	5305-00-068-0510	45A	4
80204	B1821BH038C113N	5305-00-543-2419	1	6
80204	B1821BH038C113N	5305-00-543-2419	230	5
80204	B1821BH038C113N	5305-00-543-2419	250	13
80204	B1821BH038C113N	5305-00-543-2419	189M	10
80204	B1821BH038C113N	5305-00-543-2419	202B	1
80204	B1821BH038C113N	5305-00-543-2419	230A	5
80204	B1821BH038C113N	5305-00-543-2419	230B	4
80204	B1821BH038C113N	5305-00-543-2419	230B	20
80204	B1821BH038C113N	5305-00-543-2419	266B	1
80204	B1821BH038C113N	5305-00-543-2419	38A	17
80204	B1821BH038C125N	5305-00-068-0511	2	2
80204	B1821BH038C125N	5305-00-068-0511	35	6
80204	B1821BH038C125N	5305-00-068-0511	110	14
80204	B1821BH038C125N	5305-00-068-0511	146	9
80204	B1821BH038C125N	5305-00-068-0511	147	7
80204	B1821BH038C125N	5305-00-068-0511	161	18
80204	B1821BH038C125N	5305-00-068-0511	173	9
80204	B1821BH038C125N	5305-00-068-0511	174	1
80204	B1821BH038C125N	5305-00-068-0511	175	4
80204	B1821BH038C125N	5305-00-068-0511	176	1
80204	B1821BH038C125N	5305-00-068-0511	182	19
80204	B1821BH038C125N	5305-00-068-0511	190	2
80204	B1821BH038C125N	5305-00-068-0511	191	2
80204	B1821BH038C125N	5305-00-068-0511	208	19
80204	B1821BH038C125N	5305-00-068-0511	167F	9
80204	B1821BH038C125N	5305-00-068-0511	167G	17
80204	B1821BH038C125N	5305-00-068-0511	189A	24
80204	B1821BH038C125N	5305-00-068-0511	189C	5
80204	B1821BH038C125N	5305-00-068-0511	189D	4
80204	B1821BH038C125N	5305-00-068-0511	189F	4
80204	B1821BH038C125N	5305-00-068-0511	189J	20
80204	B1821BH038C125N	5305-00-068-0511	189K	5
80204	B1821BH038C125N	5305-00-068-0511	189L	4
80204	B1821BH038C125N	5305-00-068-0511	189L	15
80204	B1821BH038C125N	5305-00-068-0511	189O	18
80204	B1821BH038C125N	5305-00-068-0511	200H	17
80204	B1821BH038C125N	5305-00-068-0511	201G	17
80204	B1821BH038C125N	5305-00-068-0511	201I	7
80204	B1821BH038C125N	5305-00-068-0511	202A	8
80204	B1821BH038C125N	5305-00-068-0511	202B	10
80204	B1821BH038C125N	5305-00-068-0511	208A	21
80204	B1821BH038C125N	5305-00-068-0511	225A	11

CAGE	PART NUMBER	STOCK NUMBER	FIG.	ITEM
80204	B1821BH038C125N	5305-00-068-0511	265D	8
80204	B1821BH038C125N	5305-00-068-0511	266N	15
80204	B1821BH038C125N	5305-00-068-0511	44A	27
80204	B1821BH038C138N	5305-00-688-2111	87	12
80204	B1821BH038C138N	5305-00-688-2111	254	7
80204	B1821BH038C138N	5305-00-688-2111	261	7
80204	B1821BH038C138N	5305-00-688-2111	189O	4
80204	B1821BH038C138N	5305-00-688-2111	189P	10
80204	B1821BH038C138N	5305-00-688-2111	189Q	1
80204	B1821BH038C138N	5305-00-688-2111	201F	1
80204	B1821BH038C138N	5305-00-688-2111	202D	4
80204	B1821BH038C150N	5305-00-725-2317	28	20
80204	B1821BH038C150N	5305-00-725-2317	163	16
80204	B1821BH038C150N	5305-00-725-2317	173	17
80204	B1821BH038C150N	5305-00-725-2317	174	7
80204	B1821BH038C150N	5305-00-725-2317	175	13
80204	B1821BH038C150N	5305-00-725-2317	176	14
80204	B1821BH038C150N	5305-00-725-2317	183	12
80204	B1821BH038C150N	5305-00-725-2317	190	6
80204	B1821BH038C150N	5305-00-725-2317	199	1
80204	B1821BH038C150N	5305-00-725-2317	206	14
80204	B1821BH038C150N	5305-00-725-2317	254	12
80204	B1821BH038C150N	5305-00-725-2317	257	9
80204	B1821BH038C150N	5305-00-725-2317	163A	17
80204	B1821BH038C150N	5305-00-725-2317	166B	28
80204	B1821BH038C150N	5305-00-725-2317	167T	46
80204	B1821BH038C150N	5305-00-725-2317	167U	1
80204	B1821BH038C150N	5305-00-725-2317	189A	12
80204	B1821BH038C150N	5305-00-725-2317	189B	11
80204	B1821BH038C150N	5305-00-725-2317	189C	7
80204	B1821BH038C150N	5305-00-725-2317	189D	14
80204	B1821BH038C150N	5305-00-725-2317	189F	4
80204	B1821BH038C150N	5305-00-725-2317	189G	10
80204	B1821BH038C150N	5305-00-725-2317	189H	5
80204	B1821BH038C150N	5305-00-725-2317	189I	24
80204	B1821BH038C150N	5305-00-725-2317	189J	18
80204	B1821BH038C150N	5305-00-725-2317	189O	2
80204	B1821BH038C150N	5305-00-725-2317	195G	8
80204	B1821BH038C150N	5305-00-725-2317	196B	3
80204	B1821BH038C150N	5305-00-725-2317	196G	53
80204	B1821BH038C150N	5305-00-725-2317	207A	34
80204	B1821BH038C150N	5305-00-725-2317	207B	21
80204	B1821BH038C150N	5305-00-725-2317	265D	1
80204	B1821BH038C150N	5305-00-725-2317	265E	2
80204	B1821BH038C150N	5305-00-725-2317	266B	21

CAGE	PART NUMBER	STOCK NUMBER	FIG.	ITEM
80204	B1821BH038C150N	5305-00-725-2317	266L	11
80204	B1821BH038C150N	5305-00-725-2317	42A	20
80204	B1821BH038C175N	5305-00-821-3869	265	12
80204	B1821BH038C175N	5305-00-821-3869	189B	9
80204	B1821BH038C175N	5305-00-821-3869	189G	7
80204	B1821BH038C175N	5305-00-821-3869	189I	30
80204	B1821BH038C175N	5305-00-821-3869	189J	8
80204	B1821BH038C175N	5305-00-821-3869	189K	7
80204	B1821BH038C175N	5305-00-821-3869	189L	17
80204	B1821BH038C175N	5305-00-821-3869	189N	12
80204	B1821BH038C175N	5305-00-821-3869	189O	23
80204	B1821BH038C175N	5305-00-821-3869	189P	17
80204	B1821BH038C175N	5305-00-821-3869	195G	7
80204	B1821BH038C175N	5305-00-821-3869	195H	3
80204	B1821BH038C175N	5305-00-821-3869	195I	3
80204	B1821BH038C175N	5305-00-821-3869	196G	57
80204	B1821BH038C175N	5305-00-821-3869	200B	13
80204	B1821BH038C175N	5305-00-821-3869	200F	28
80204	B1821BH038C175N	5305-00-821-3869	200H	16
80204	B1821BH038C175N	5305-00-821-3869	266J	5
80204	B1821BH038C200N	5305-00-782-9489	35	24
80204	B1821BH038C200N	5305-00-782-9489	250	14
80204	B1821BH038C200N	5305-00-782-9489	167U	15
80204	B1821BH038C200N	5305-00-782-9489	189A	18
80204	B1821BH038C200N	5305-00-782-9489	189B	12
80204	B1821BH038C200N	5305-00-782-9489	189O	11
80204	B1821BH038C200N	5305-00-782-9489	195I	7
80204	B1821BH038C200N	5305-00-782-9489	195J	6
80204	B1821BH038C200N	5305-00-782-9489	195K	6
80204	B1821BH038C200N	5305-00-782-9489	265E	10
80204	B1821BH038C225N	5305-00-638-8920	35	17
80204	B1821BH038C225N	5305-00-638-8920	162	25
80204	B1821BH038C225N	5305-00-638-8920	177	6
80204	B1821BH038C225N	5305-00-638-8920	183	27
80204	B1821BH038C225N	5305-00-638-8920	167H	30
80204	B1821BH038C225N	5305-00-638-8920	189G	29
80204	B1821BH038C225N	5305-00-638-8920	189I	17
80204	B1821BH038C225N	5305-00-638-8920	189J	11
80204	B1821BH038C225N	5305-00-638-8920	189O	15
80204	B1821BH038C225N	5305-00-638-8920	195F	8
80204	B1821BH038C225N	5305-00-638-8920	195G	4
80204	B1821BH038C225N	5305-00-638-8920	235A	12
80204	B1821BH038C250N	5305-00-543-2866	183	27
80204	B1821BH038C250N	5305-00-543-2866	167T	49
80204	B1821BH038C250N	5305-00-543-2866	167U	17

CAGE	PART NUMBER	STOCK NUMBER	FIG.	ITEM
80204	B1821BH038C250N	5305-00-543-2866	169J	44
80204	B1821BH038C250N	5305-00-543-2866	195D	12
80204	B1821BH038C250N	5305-00-543-2866	195F	6
80204	B1821BH038C250N	5305-00-543-2866	195H	9
80204	B1821BH038C250N	5305-00-543-2866	195J	4
80204	B1821BH038C250N	5305-00-543-2866	195J	8
80204	B1821BH038C250N	5305-00-543-2866	195K	7
80204	B1821BH038C250N	5305-00-543-2866	196B	5
80204	B1821BH038C250N	5305-00-543-2866	196C	23
80204	B1821BH038C250N	5305-00-543-2866	196G	51
80204	B1821BH038C250N	5305-00-543-2866	273A	13
80204	B1821BH038C250N	5305-00-543-2866	42A	17
80204	B1821BH038C250N	5305-00-543-2866	42B	12
80204	B1821BH038C250N	5305-00-543-2866	44A	25
80204	B1821BH038C275N	5305-00-781-3926	1	5
80204	B1821BH038C275N	5305-00-781-3926	189I	11
80204	B1821BH038C275N	5305-00-781-3926	195F	19
80204	B1821BH038C275N	5305-00-781-3926	195H	7
80204	B1821BH038C275N	5305-00-781-3926	195J	8
80204	B1821BH038C275N	5305-00-781-3926	195K	4
80204	B1821BH038C275N	5305-00-781-3926	196B	4
80204	B1821BH038C275N	5305-00-781-3926	196D	12
80204	B1821BH038C275N	5305-00-781-3926	196G	8
80204	B1821BH038C300N	5305-00-846-5703	173	6
80204	B1821BH038C300N	5305-00-846-5703	174	13
80204	B1821BH038C300N	5305-00-846-5703	175	6
80204	B1821BH038C300N	5305-00-846-5703	176	13
80204	B1821BH038C300N	5305-00-846-5703	183	8
80204	B1821BH038C300N	5305-00-846-5703	198	18
80204	B1821BH038C300N	5305-00-846-5703	200	9
80204	B1821BH038C300N	5305-00-846-5703	204	17
80204	B1821BH038C300N	5305-00-846-5703	166B	31
80204	B1821BH038C300N	5305-00-846-5703	167U	27
80204	B1821BH038C300N	5305-00-846-5703	188O	10
80204	B1821BH038C300N	5305-00-846-5703	189A	19
80204	B1821BH038C300N	5305-00-846-5703	189B	22
80204	B1821BH038C300N	5305-00-846-5703	189I	23
80204	B1821BH038C300N	5305-00-846-5703	189J	29
80204	B1821BH038C300N	5305-00-846-5703	195E	10
80204	B1821BH038C300N	5305-00-846-5703	196D	48
80204	B1821BH038C300N	5305-00-846-5703	196G	45
80204	B1821BH038C325N	5305-00-808-0864	173	5
80204	B1821BH038C325N	5305-00-808-0864	174	12
80204	B1821BH038C325N	5305-00-808-0864	175	8
80204	B1821BH038C325N	5305-00-808-0864	183	7

CAGE	PART NUMBER	STOCK NUMBER	FIG.	ITEM
80204	B1821BH038C325N	5305-00-808-0864	197	13
80204	B1821BH038C325N	5305-00-808-0864	189I	4
80204	B1821BH038C325N	5305-00-808-0864	189M	3
80204	B1821BH038C325N	5305-00-808-0864	189N	9
80204	B1821BH038C325N	5305-00-808-0864	195D	7
80204	B1821BH038C325N	5305-00-808-0864	195E	14
80204	B1821BH038C325N	5305-00-808-0864	195F	15
80204	B1821BH038C325N	5305-00-808-0864	266J	21
80204	B1821BH038C325N	5305-00-808-0864	266K	1
80204	B1821BH038C325N	5305-00-808-0864	266L	1
80204	B1821BH038C350N	5305-00-781-3927	173	12
80204	B1821BH038C350N	5305-00-781-3927	273	28
80204	B1821BH038C350N	5305-00-781-3927	143A	4
80204	B1821BH038C350N	5305-00-781-3927	167G	8
80204	B1821BH038C350N	5305-00-781-3927	189J	38
80204	B1821BH038C350N	5305-00-781-3927	195G	7
80204	B1821BH038C350N	5305-00-781-3927	195H	9
80204	B1821BH038C350N	5305-00-781-3927	195I	8
80204	B1821BH038C350N	5305-00-781-3927	196D	31
80204	B1821BH038C350N	5305-00-781-3927	265H	2
80204	B1821BH038C350N	5305-00-781-3927	266H	6
80204	B1821BH038C350N	5305-00-781-3927	273A	15
80204	B1821BH038C350N	5305-00-781-3927	42A	19
80204	B1821BH038C375N	5305-00-990-8632	173	7
80204	B1821BH038C375N	5305-00-990-8632	174	11
80204	B1821BH038C375N	5305-00-990-8632	175	10
80204	B1821BH038C375N	5305-00-990-8632	188	11
80204	B1821BH038C375N	5305-00-990-8632	167O	8
80204	B1821BH038C375N	5305-00-990-8632	169D	6
80204	B1821BH038C375N	5305-00-990-8632	195H	7
80204	B1821BH038C375N	5305-00-990-8632	195I	4
80204	B1821BH038C375N	5305-00-990-8632	196B	1
80204	B1821BH038C375N	5305-00-990-8632	196C	22
80204	B1821BH038C375N	5305-00-990-8632	196D	31
80204	B1821BH038C375N	5305-00-990-8632	202C	1
80204	B1821BH038C400N	5305-00-781-3928	176	11
80204	B1821BH038C400N	5305-00-781-3928	138A	4
80204	B1821BH038C400N	5305-00-781-3928	143A	10
80204	B1821BH038C400N	5305-00-781-3928	167C	12
80204	B1821BH038C400N	5305-00-781-3928	167G	25
80204	B1821BH038C400N	5305-00-781-3928	167U	30
80204	B1821BH038C400N	5305-00-781-3928	189A	21
80204	B1821BH038C400N	5305-00-781-3928	189B	10
80204	B1821BH038C400N	5305-00-781-3928	189M	1
80204	B1821BH038C400N	5305-00-781-3928	196D	31

CROSS REFERENCE INDEXES
PART NUMBER

CAGE	PART NUMBER	STOCK NUMBER	FIG.	ITEM
80204	B1821BH038C400N	5305-00-781-3928	202B	3
80204	B1821BH038C400N	5305-00-781-3928	202E	4
80204	B1821BH038C425N	5305-00-781-3929	173	8
80204	B1821BH038C425N	5305-00-781-3929	174	9
80204	B1821BH038C425N	5305-00-781-3929	196G	43
80204	B1821BH038C425N	5305-00-781-3929	273A	4
80204	B1821BH038C450N	5305-00-857-6886	175	11
80204	B1821BH038C450N	5305-00-857-6886	200	12
80204	B1821BH038C450N	5305-00-857-6886	150A	12
80204	B1821BH038C450N	5305-00-857-6886	167U	26
80204	B1821BH038C450N	5305-00-857-6886	195B	5
80204	B1821BH038C450N	5305-00-857-6886	195C	5
80204	B1821BH038C450N	5305-00-857-6886	196C	12
80204	B1821BH038C450N	5305-00-857-6886	196D	1
80204	B1821BH038C450N	5305-00-857-6886	202C	13
80204	B1821BH038C475N	5305-00-781-3930	188K	10
80204	B1821BH038C475N	5305-00-781-3930	188N	11
80204	B1821BH038C475N	5305-00-781-3930	188O	8
80204	B1821BH038C500N	5305-00-964-0503	167G	24
80204	B1821BH038C500N	5305-00-964-0503	167U	27
80204	B1821BH038C500N	5305-00-964-0503	195D	9
80204	B1821BH038C550N	5305-01-458-1670	167G	23
80204	B1821BH038C550N	5305-01-458-1670	195E	13
80204	B1821BH038C550N	5305-01-458-1670	196C	18
80204	B1821BH038C650N	5305-01-475-3158	177	4
80204	B1821BH038C650N	5305-01-475-3158	275	7
80204	B1821BH038C650N	5305-01-475-3158	167G	18
80204	B1821BH038C650N	5305-01-475-3158	196G	44
80204	B1821BH038C675N	5305-01-439-2123	273	8
80204	B1821BH038C700N	5305-01-475-3154	196C	13
80204	B1821BH038C700N	5305-01-475-3154	42B	1
80204	B1821BH038C750N	5305-01-475-3364	196C	17
80204	B1821BH038F063N	5305-00-269-3233	246	10
80204	B1821BH038F063N	5305-00-269-3233	201C	14
80204	B1821BH038F075N	5305-00-269-3234	74	6
80204	B1821BH038F075N	5305-00-269-3234	198	12
80204	B1821BH038F075N	5305-00-269-3234	200	16
80204	B1821BH038F075N	5305-00-269-3234	200C	2
80204	B1821BH038F100N	5305-00-269-3236	199	5
80204	B1821BH038F100N	5305-00-269-3236	189I	15
80204	B1821BH038F100N	5305-00-269-3236	189J	13
80204	B1821BH038F100N	5305-00-269-3236	189K	10
80204	B1821BH038F100N	5305-00-269-3236	200C	6
80204	B1821BH038F125N	5305-00-269-3238	189A	15
80204	B1821BH038F125N	5305-00-269-3238	189B	15

CAGE	PART NUMBER	STOCK NUMBER	FIG.	ITEM
80204	B1821BH038F125N	5305-00-269-3238	189C	10
80204	B1821BH038F125N	5305-00-269-3238	189D	11
80204	B1821BH038F138N	5305-00-269-3239	200A	8
80204	B1821BH038F150N	5305-00-269-3240	200B	7
80204	B1821BH038F150N	5305-00-269-3240	200C	12
80204	B1821BH038F150N	5305-00-269-3240	200E	25
80204	B1821BH038F150N	5305-00-269-3240	200F	23
80204	B1821BH038F150N	5305-00-269-3240	201J	16
80204	B1821BH038F175N	5305-00-269-3241	201D	2
80204	B1821BH038F225N	5305-00-269-3243	200A	1
80204	B1821BH038F225N	5305-00-269-3243	265B	18
80204	B1821BH038F325N	5305-00-269-3247	200D	9
80204	B1821BH038F350N	5305-00-269-3248	198	4
80204	B1821BH038F350N	5305-00-269-3248	188J	7
80204	B1821BH038F350N	5305-00-269-3248	188K	9
80204	B1821BH038F350N	5305-00-269-3248	200C	15
80204	B1821BH038F350N	5305-00-269-3248	201D	5
80204	B1821BH038F375N	5305-00-269-3249	188G	6
80204	B1821BH038F375N	5305-00-269-3249	188K	6
80204	B1821BH038F375N	5305-00-269-3249	188O	9
80204	B1821BH038F425N	5305-00-269-4528	201J	14
80204	B1821BH038F525N	5305-01-571-7571	201J	15
80204	B1821BH044C088N	5305-00-071-1785	253	19
80204	B1821BH044C100N	5305-00-071-1786	108	5
80204	B1821BH044C100N	5305-00-071-1786	119	42
80204	B1821BH044C100N	5305-00-071-1786	153	10
80204	B1821BH044C100N	5305-00-071-1786	201C	17
80204	B1821BH044C125N	5305-00-071-1788	162	6
80204	B1821BH044C125N	5305-00-071-1788	256	12
80204	B1821BH044C125N	5305-00-071-1788	125A	8
80204	B1821BH044C125N	5305-00-071-1788	125B	12
80204	B1821BH044C125N	5305-00-071-1788	201L	34
80204	B1821BH044C138N	5305-00-071-1789	256	9
80204	B1821BH044C150N	5305-00-071-2055	114	15
80204	B1821BH044C175N	5305-00-071-2056	134	14
80204	B1821BH044C200N	5305-00-071-2057	201L	40
80204	B1821BH044C200N	5305-00-071-2057	207A	16
80204	B1821BH044C200N	5305-00-071-2057	207B	35
80204	B1821BH044C300N	5305-00-071-2061	253	18
80204	B1821BH044C325N	5305-00-926-5518	253	16
80204	B1821BH044C475N	5305-00-004-3164	134	20
80204	B1821BH044F075N	5305-00-709-8282	220A	11
80204	B1821BH044F075N	5305-00-709-8282	221B	11
80204	B1821BH044F100N	5305-00-709-8517	220A	10
80204	B1821BH044F100N	5305-00-709-8517	221C	6

CAGE	PART NUMBER	STOCK NUMBER	FIG.	ITEM
80204	B1821BH044F138N	5305-00-709-8515	221C	2
80204	B1821BH044F175N	5305-01-407-9005	221C	10
80204	B1821BH044F200N	5305-00-709-8542	220A	14
80204	B1821BH044F200N	5305-00-709-8542	221B	9
80204	B1821BH044F975N	5305-01-429-9149	45	1
80204	B1821BH050C100N	5305-00-071-2066	233	25
80204	B1821BH050C113N	5305-00-732-0511	87	16
80204	B1821BH050C113N	5305-00-732-0511	246	21
80204	B1821BH050C113N	5305-00-732-0511	150A	20
80204	B1821BH050C125N	5305-00-071-2067	2	14
80204	B1821BH050C125N	5305-00-071-2067	111	11
80204	B1821BH050C125N	5305-00-071-2067	113	16
80204	B1821BH050C125N	5305-00-071-2067	119	16
80204	B1821BH050C125N	5305-00-071-2067	141	18
80204	B1821BH050C125N	5305-00-071-2067	143	16
80204	B1821BH050C125N	5305-00-071-2067	144	11
80204	B1821BH050C125N	5305-00-071-2067	143A	23
80204	B1821BH050C138N	5305-00-071-2068	116A	7
80204	B1821BH050C150N	5305-00-071-2069	111	5
80204	B1821BH050C150N	5305-00-071-2069	113	40
80204	B1821BH050C150N	5305-00-071-2069	116	5
80204	B1821BH050C150N	5305-00-071-2069	143	20
80204	B1821BH050C150N	5305-00-071-2069	144	3
80204	B1821BH050C150N	5305-00-071-2069	246	27
80204	B1821BH050C150N	5305-00-071-2069	253	7
80204	B1821BH050C150N	5305-00-071-2069	256	6
80204	B1821BH050C150N	5305-00-071-2069	113A	3
80204	B1821BH050C150N	5305-00-071-2069	116A	6
80204	B1821BH050C150N	5305-00-071-2069	144A	18
80204	B1821BH050C150N	5305-00-071-2069	226A	8
80204	B1821BH050C150N	5305-00-071-2069	265B	3
80204	B1821BH050C175N	5305-00-071-2070	101	6
80204	B1821BH050C175N	5305-00-071-2070	142	20
80204	B1821BH050C175N	5305-00-071-2070	148	14
80204	B1821BH050C175N	5305-00-071-2070	253	6
80204	B1821BH050C175N	5305-00-071-2070	261	6
80204	B1821BH050C175N	5305-00-071-2070	101A	8
80204	B1821BH050C175N	5305-00-071-2070	125A	16
80204	B1821BH050C175N	5305-00-071-2070	200H	10
80204	B1821BH050C200N	5305-00-071-2071	36	14
80204	B1821BH050C200N	5305-00-071-2071	201K	6
80204	B1821BH050C200N	5305-00-071-2071	207A	12
80204	B1821BH050C200N	5305-00-071-2071	265D	4
80204	B1821BH050C250N	5305-00-071-2073	150	5
80204	B1821BH050C275N	5305-00-071-2074	42	1

CROSS REFERENCE INDEXES
PART NUMBER

CAGE	PART NUMBER	STOCK NUMBER	FIG.	ITEM
80204	B1821BH050C275N	5305-00-071-2074	143	17
80204	B1821BH050C275N	5305-00-071-2074	144	1
80204	B1821BH050C275N	5305-00-071-2074	273	1
80204	B1821BH050C275N	5305-00-071-2074	143A	21
80204	B1821BH050C275N	5305-00-071-2074	144A	2
80204	B1821BH050C275N	5305-00-071-2074	38A	20
80204	B1821BH050C300N	5305-00-071-2075	143	15
80204	B1821BH050C300N	5305-00-071-2075	144	19
80204	B1821BH050C300N	5305-00-071-2075	149	1
80204	B1821BH050C300N	5305-00-071-2075	150	5
80204	B1821BH050C300N	5305-00-071-2075	143A	9
80204	B1821BH050C300N	5305-00-071-2075	144A	21
80204	B1821BH050C300N	5305-00-071-2075	42A	1
80204	B1821BH050C325N	5305-00-071-2076	116	9
80204	B1821BH050C325N	5305-00-071-2076	143	21
80204	B1821BH050C325N	5305-00-071-2076	143A	8
80204	B1821BH050C325N	5305-00-071-2076	144A	15
80204	B1821BH050C325N	5305-00-071-2076	226A	7
80204	B1821BH050C350N	5305-00-071-2077	142	19
80204	B1821BH050C350N	5305-00-071-2077	143	8
80204	B1821BH050C350N	5305-00-071-2077	149	6
80204	B1821BH050C350N	5305-00-071-2077	257	10
80204	B1821BH050C350N	5305-00-071-2077	143A	16
80204	B1821BH050C350N	5305-00-071-2077	150A	1
80204	B1821BH050C375N	5305-00-071-2078	142	12
80204	B1821BH050C375N	5305-00-071-2078	143	19
80204	B1821BH050C375N	5305-00-071-2078	142A	13
80204	B1821BH050C400N	5305-00-071-2079	142	12
80204	B1821BH050C400N	5305-00-071-2079	142	19
80204	B1821BH050C400N	5305-00-071-2079	145	5
80204	B1821BH050C400N	5305-00-071-2079	142A	24
80204	B1821BH050C400N	5305-00-071-2079	143A	6
80204	B1821BH050C400N	5305-00-071-2079	150A	17
80204	B1821BH050C425N	5305-00-071-1783	141	7
80204	B1821BH050C425N	5305-00-071-1783	145	5
80204	B1821BH050C425N	5305-00-071-1783	145	11
80204	B1821BH050C425N	5305-00-071-1783	256	19
80204	B1821BH050C425N	5305-00-071-1783	141A	14
80204	B1821BH050C450N	5305-00-071-2081	2	11
80204	B1821BH050C450N	5305-00-071-2081	141	15
80204	B1821BH050C450N	5305-00-071-2081	145	11
80204	B1821BH050C450N	5305-00-071-2081	141A	8
80204	B1821BH050C450N	5305-00-071-2081	150A	21
80204	B1821BH050C475N	5305-00-071-2082	141	2
80204	B1821BH050C500N	5305-00-071-2083	246	16

CAGE	PART NUMBER	STOCK NUMBER	FIG.	ITEM
80204	B1821BH050C600N	5305-01-032-2312	134	20
80204	B1821BH050C775N	5305-01-480-5408	42	16
80204	B1821BH050F250N	5305-00-719-5240	150	12
80204	B1821BH056C150N	5305-00-716-7680	141	12
80204	B1821BH056C150N	5305-00-716-7680	141A	22
80204	B1821BH063C125N	5305-00-724-7219	111	8
80204	B1821BH063C125N	5305-00-724-7219	116	8
80204	B1821BH063C125N	5305-00-724-7219	254	3
80204	B1821BH063C125N	5305-00-724-7219	124A	5
80204	B1821BH063C125N	5305-00-724-7219	125A	19
80204	B1821BH063C150N	5305-00-724-7220	111	10
80204	B1821BH063C150N	5305-00-724-7220	116	11
80204	B1821BH063C150N	5305-00-724-7220	124	21
80204	B1821BH063C150N	5305-00-724-7220	125	14
80204	B1821BH063C150N	5305-00-724-7220	116A	17
80204	B1821BH063C150N	5305-00-724-7220	125A	17
80204	B1821BH063C150N	5305-00-724-7220	125B	13
80204	B1821BH063C200N	5305-00-724-7222	152	7
80204	B1821BH063C275N	5305-00-724-7225	201G	11
80204	B1821BH063C300N	5305-00-724-7228	153	11
80204	B1821BH063C325N	5305-00-724-7236	141A	17
80204	B1821BH063C400N	5305-00-724-7254	148	6
80204	B1821BH063C400N	5305-00-724-7254	155	16
80204	B1821BH063C400N	5305-00-724-7254	252A	7
80204	B1821BH063C425N	5305-00-724-7263	155	8
80204	B1821BH063C450N	5305-00-724-7264	149	22
80204	B1821BH063C450N	5305-00-724-7264	155A	1
80204	B1821BH063C475N	5305-00-724-7265	155	8
80204	B1821BH063C475N	5305-00-724-7265	155	14
80204	B1821BH063C475N	5305-00-724-7265	155A	1
80204	B1821BH063C500N	5305-00-724-7266	155	14
80204	B1821BH063F500N	5305-00-726-2567	12A	23
80204	B1821BH063F500N	5305-00-726-2567	135A	4
80204	B1821BH075C100N	5305-00-947-4351	249D	11
80204	B1821BH075C325N	5305-00-947-4355	144	16
80204	B1821BH075C325N	5305-00-947-4355	144A	12
80204	B1821BH075C400N	5305-00-947-4358	142	22
80204	B1821BH075C400N	5305-00-947-4358	143	6
80204	B1821BH075C400N	5305-00-947-4358	142A	18
80204	B1821BH075C400N	5305-00-947-4358	143A	17
80204	B1821BH075C425N	5305-00-947-4359	144	10
80204	B1821BH075C425N	5305-00-947-4359	144A	9
80204	B1821BH075C450N	5305-00-947-4360	144	15
80204	B1821BH075C450N	5305-00-947-4360	145	7
80204	B1821BH075C450N	5305-00-947-4360	144A	13

CAGE	PART NUMBER	STOCK NUMBER	FIG.	ITEM
80204	B1821BH075C450N	5305-00-947-4360	150A	4
80204	B1821BH075C475N	5305-00-947-4361	114	1
80204	B1821BH075C475N	5305-00-947-4361	120	1
80204	B1821BH075C475N	5305-00-947-4361	120	21
80204	B1821BH075C475N	5305-00-947-4361	145	7
80204	B1821BH075C475N	5305-00-947-4361	154	2
80204	B1821BH075C475N	5305-00-947-4361	141A	6
80204	B1821BH075C475N	5305-00-947-4361	144A	19
80204	B1821BH075C500N	5305-00-947-4362	114	21
80204	B1821BH075C550N	5305-00-947-4363	120	1
80204	B1821BH075C550N	5305-00-947-4363	225A	24
80204	B18231B10025NF	5305-01-380-3395	2	6
80204	B18231B10035N	5305-01-438-8821	87	12
80204	B18234B08015N	5305-01-544-6043	17	3
80204	B18241B080	5310-01-328-7657	14	7
80204	B18241B100	5310-01-366-3539	42A	10
80204	B18241B100F	5310-01-395-8747	14	5
80204	B18241B100F	5310-01-395-8747	39	9
80204	B18241B100F	5310-01-395-8747	72	4
80204	B18241B100F	5310-01-395-8747	273A	7
80204	B18241B100F	5310-01-395-8747	39A	10
81349	B47287-II-1/2	9330-01-252-1239	126	28
81349	B47287-II-1/2	9330-01-252-1239	BULK	40
81349	B47287-II-1/2-27		127	15
81349	B47287-II-1/2-3		27	15
72962	B79NM-50	5310-01-299-6460	228	4
72962	B79NM-50	5310-01-299-6460	228A	4
13940	BS 78505	5325-00-371-8108	226	2
13940	BS 78505	5325-00-371-8108	226	6
13940	BS 78505	5325-00-371-8108	249	2
13940	BS 78505	5325-00-371-8108	249	7
13940	BS 78505	5325-00-371-8108	227B	3
33287	BT-33-73F	6635-01-093-3710	293	1
53867	BX129860	5330-01-560-1552	129	3
53867	BX2771145		129	2
73821	C0850-081-2250-M	5360-01-255-9899	163	24
73821	C0850-081-2250-M	5360-01-255-9899	163A	25
82484	C-1703	5340-01-211-5593	228	9
82484	C-1703	5340-01-211-5593	228A	9
78553	C183-012-4	5310-01-213-1333	205	20
78553	C183-012-4	5310-01-213-1333	205A	17
80604	C-4171	5120-01-026-1666	301	9
16004	C43974	4010-00-585-2108	BULK	1
72800	C7685-10A	5310-01-194-7066	158	56
72800	C7685-10A	5310-01-194-7066	165	7

CAGE	PART NUMBER	STOCK NUMBER	FIG.	ITEM
71468	CA121003-3	5935-01-460-5508	260	48
71468	CA3108E28-21SF80	5935-01-317-6731	78	8
0GZB7	CAP024L-1	5945-01-495-0483	252F	11
99539	CBM21389	5310-00-582-5965	56	10
0U2B4	CD5330-02527-1	5331-00-137-3450	50	9
71041	CFHD-5	3120-01-393-9361	168	15
14153	CIPRD-AN960-416L	5310-00-167-0835	201L	10
99862	CL-654-TK	5355-01-472-2179	254	4
99862	CL-654-TK	5355-01-472-2179	257	7
49862	CL-8-HRP-S	5340-01-450-6572	201G	21
81348	CMDX2-3PT573036	5340-00-809-1492	30	15
81348	CMDX2-3PT573036	5340-00-809-1492	51	22
81348	CMDX2-3PT573036	5340-00-809-1492	100	15
75272	COV-1309	5340-01-101-8262	30	2
75272	COV-3311	5340-01-210-0692	29	21
78500	CPL6R50	2520-00-352-2168	133	29
19207	CPR104420-1	4720-01-058-7213	BULK	39
19207	CPR104420-1-11IN		44A	11
19207	CPR104420-1-11IN		99A	8
19207	CPR104420-1-15		129	7
19207	CPR104420-1-16IN		44A	29
19207	CPR104420-1-17	4720-01-544-6888	107	1
19207	CPR104420-1-17	4720-01-544-6888	101A	16
19207	CPR104420-1-17	4720-01-544-6888	116A	2
19207	CPR104420-1-1IN		128A	4
19207	CPR104420-1-29		25	4
19207	CPR104420-1-3IN		128A	2
19207	CPR104420-1-4		112	4
19207	CPR104420-1-40		258	2
19207	CPR104420-1-41IN		99A	4
19207	CPR104420-1-47		138A	31
19207	CPR104420-1-62IN		99A	6
19207	CPR104420-1-70		255	6
19207	CPR104420-2-129		29	3
19207	CPR104420-3-44		29	13
80201	CR 535094-60	5330-01-203-6551	113	2
80201	CR 535094-60	5330-01-203-6551	119	2
11815	CR-213-4-2	5320-01-151-1061	165	12
11815	CR-213-4-2	5320-01-151-1061	165	23
11815	CR3213-6-3	5320-01-135-7319	156	4
11815	CR3213-6-4	5320-01-136-1782	156	1
11815	CR3213-6-4	5320-01-136-1782	158	17
11815	CR3213-6-7	5320-01-085-9995	156	12
11815	CR3213-6-7	5320-01-085-9995	158	20
11815	CR3213-6-9	5320-01-086-1143	156	3

CAGE	PART NUMBER	STOCK NUMBER	FIG.	ITEM
11815	CR3213-6-9	5320-01-086-1143	158	16
75272	CWV-0407	5340-01-215-5478	233	31
64878	D100-MIL-1	5180-01-201-4978	298	10
24866	D12604	2540-01-184-5503	228	23
24866	D12604	2540-01-184-5503	228A	23
53964	D420044	4330-01-189-1007	31	1
62161	D528235-B	2640-01-457-5552	131	15
62161	D528235-B	2640-01-457-5552	131A	15
62161	D528235-H1	2640-01-419-6200	131	15
19207	D528235-H1	2640-01-419-6200	131A	15
62161	D-528240	4310-01-345-5723	299	KIT
84760	DB2831-5079	2910-01-434-8597	20	2
5A910	DC8218	6220-01-107-2613	60	4
34904	DC8226	5330-01-076-6172	60	10
13873	DGSCV-91-157	6220-01-128-0087	60	2
1FH08	DIN933M10X20	5306-01-158-9917	25	16
60827	DP3-01-01	6680-01-482-4995	138A	15
24975	DRA-3002D	2920-01-187-1310	50	8
02126	DR-T10X3/4	5305-01-006-5736	258	5
3GMU7	DT 3816 AN	5310-01-568-3956	167U	9
1WVZ0	E35454	2540-01-495-0817	220	2
1WVZ0	E35454	2540-01-495-0817	221	3
1WVZ0	E35454	2540-01-495-0817	221A	1
34623	EC-06008597	4710-01-439-8165	100	4
34623	EC-06008597	4710-01-439-8165	100A	14
34623	EC-06008598	4710-01-439-8167	100	3
34623	EC12338083	5340-01-197-6755	200	11
34623	EC12338083	5340-01-197-6755	196D	49
34623	EC12338952-2	5342-01-249-5389	165	31
19207	EC12340298	2590-01-192-4525	196D	8
19207	EC12340298	2590-01-192-4525	196G	62
34623	EC-12447125	2520-01-409-2512	101	2
34623	EC-12460103	5340-01-408-5851	28	29
34623	EC12460241B1	5340-01-432-8681	126	41
34623	EC12460241B1	5340-01-432-8681	127	19
34623	EC12460245B1	5340-01-432-4877	143	13
34623	EC12460245B1	5340-01-432-4877	144	18
34623	EC12460253B1	5340-01-437-8751	143	12
34623	EC12460521B1	5340-01-458-8236	126	39
34623	EC12460528B1	5340-01-459-9424	163	11
34623	EC12460528B1	5340-01-459-9424	163A	12
34623	EC12460529B1	5340-01-456-3913	163	2
34623	EC12460529B1	5340-01-456-3913	164	9
34623	EC12460529B1	5340-01-456-3913	163A	4
34623	EC12460529B1	5340-01-456-3913	164A	8

CAGE	PART NUMBER	STOCK NUMBER	FIG.	ITEM
34623	EC12469281	5340-01-457-5734	48	9
34623	EC6004838	2530-01-420-5180	134	6
34623	EC6004839B1	2530-01-420-3839	134	2
34623	EC-RCSK1834-3-1	5340-01-412-3563	88	28
0RHT0	ECV-01	2540-01-473-1048	214	5
0RHT0	ECV-02	2540-01-472-9902	214	1
0RHT0	ECV-03	2540-01-473-0368	214	17
0RHT0	ECV-04	2540-01-473-0367	214	16
0RHT0	ECV-05	2540-01-473-0362	214	13
0RHT0	ECV-06	2540-01-473-0361	214	7
0RHT0	ECV-07	2540-01-473-0369	214	17
0RHT0	ECV-09	2540-01-472-9914	214	6
12624	EP-3376		BULK	65
12624	EP-3376-13IN		209C	5
12624	EP-3376-6.62IN		209C	6
02978	ERNA245	5310-00-584-5272	66	2
02978	ERNA245	5310-00-584-5272	196D	39
34623	ET029	4720-01-185-6673	BULK	15
34623	EX4149	6150-01-432-3582	76	1
34623	EX4150-1		49	1
34623	EX4150-5	6150-01-474-9646	258	7
34623	EX4150-6		49	8
34623	EX4151-2		49	14
34623	EX4151-3	6150-01-460-4958	258	8
34623	EX4228-2	5340-01-434-8109	126	32
34623	EX4228-2	5340-01-434-8109	127	24
34623	EX4319	7690-01-473-4550	240	3
34623	EX4379		BULK	30
34623	EX4499	4710-01-473-1654	126	20
34623	EX4617-1	5342-01-475-6655	12	3
34623	EX4717-1	5340-01-458-7156	127	12
34623	EX4717-2	5340-01-458-7147	127	26
34623	EX4786-1	4720-01-456-2944	126	37
62826	EX4855-1	2520-01-478-0306	115	1
34623	EX4856	2520-01-456-6660	117	14
34623	EX4857	2530-01-461-4732	125	13
34623	EX4858		124	16
34623	EX4858		125	11
34623	EX5024	5340-01-473-2667	126	12
34623	EX5025	2530-01-473-2724	126	21
34623	EX5025	2530-01-473-2724	126A	6
34623	EX5053	4710-01-473-1744	126	18
34623	EX5054	4710-01-473-1749	126	17
27182	F35SRBXXBZXX	5340-01-271-6461	166	13
55719	FA10E	5120-01-367-3477	290	15

CROSS REFERENCE INDEXES
PART NUMBER

CAGE	PART NUMBER	STOCK NUMBER	FIG.	ITEM
55719	FA5E	5120-01-367-3456	290	13
55719	FAM6A	5120-01-055-1308	290	12
55719	FAM7E	5120-01-437-3658	299	5
01276	FB6004-01	4720-01-485-0416	225C	1
16717	FB9778-01	4720-01-213-1574	140	11
55719	FC18B	5120-01-335-1094	299	1
55719	FC22B	5120-01-335-1096	299	1
55719	FC28B	5120-01-335-1099	299	1
55719	FC30B	5120-01-335-1100	299	1
55719	FCOM14	5120-01-079-8023	299	1
98313	FDC8070-1-4	5340-01-258-4529	201G	26
98313	FDC8070-1-4	5340-01-258-4529	223A	6
98313	FDC9902	5340-01-530-1744	200	17
98313	FDC9902	5340-01-530-1744	196G	55
98313	FDC9902	5340-01-530-1744	200C	11
98313	FDC9902	5340-01-530-1744	201C	22
01276	FF3323-0706-259	4730-01-493-4056	138A	26
01276	FF3323-0706-259	4730-01-493-4056	138B	15
01276	FF90154-18	5310-01-412-4013	138B	2
01276	FK3727GGG0744	4720-01-486-2851	252D	6
01276	FK3727GGJ0324AA	4720-01-485-0104	140	25
01276	FK3727GGJ0324AA	4720-01-485-0104	225D	1
01276	FK3727GGJ0630AA	4720-01-486-5249	252D	5
55719	FTX40E	5120-01-367-3536	300	8
01276	FZ178GGG0204225AA	4720-01-484-9983	140	26
01276	FZ178GGG0204225AA	4720-01-484-9983	225D	2
75535	G-408-3/8	4030-01-256-0471	260	44
24617	G-9422275	5310-01-208-5252	248	23
09527	GG0401	6620-01-534-2370	52	9
01276	GG108-NP08-18	4730-01-359-2382	138C	11
01276	GG308-NP08-18	4730-01-358-8538	138B	1
19728	GK-174A		50	39
7X677	GM6210M-19		138A	21
7X677	GM6210M-22		138A	17
7X677	GM6210M-27		139	1
7X677	GM6210M-40		139	11
7X677	GM6210M-8		139	8
7X677	GM6210M-8		138A	24
82484	GS-2176	2540-01-422-0253	228	1
0ZM57	H100		150A	29
76599	H12SS	4730-00-908-3194	204	32
0ZM57	H133		150A	13
0ZM57	H1593		150A	25
0ZM57	H1594		150A	27
50992	H38C-2619	4820-01-189-2107	233	38

CAGE	PART NUMBER	STOCK NUMBER	FIG.	ITEM
11815	H749A-456	5130-01-104-5370	298	11
88818	H795220608	5305-00-889-3000	236	22
K5667	HE11595		138B	6
K5667	HE1250079/100		138B	5
K5667	HE1280136		KITS	2A
K5667	HE1290019	5305-01-491-2143	138B	9
K5667	HE206000	5310-01-491-2014	138B	8
K5667	HE260128		138B	4
59563	HG-9263	5340-01-572-6307	201I	3
0ZJZ0	HS49745	5340-01-195-8837	205	21
0ZJZ0	HS49745	5340-01-195-8837	205A	18
0ZJZ0	HS-49745	5340-01-195-8837	204B	17
7Z588	HTM-1200	4730-01-210-5785	25	30
55883	IPD8S5128	2530-01-069-0906	50	27
33287	J-06098-3	5306-01-254-5465	290	6
33287	J-06098-5	5310-01-253-3148	290	7
33287	J-08611-A	5120-01-185-7964	296	2
81343	J1120S4TYBCL2A	3120-01-457-7089	266	12
81343	J1120S4TYBCL2A	3120-01-457-7089	204A	32
25341	J21359-A	5120-01-176-1845	294	5
25341	J-21362	4910-01-178-6551	301	7
33287	J-21370-10	5120-01-423-0032	300	2
25341	J-21370-A	4910-01-178-0722	294	3
33287	J21664	4910-01-210-1318	293	6
33287	J-21777-43	5120-01-366-9468	302	3
33287	J21786	5120-01-185-7957	296	9
33287	J21787	5120-01-187-3660	296	1
25341	J21795-02	4910-01-178-8865	293	5
33287	J22661	5120-01-227-1680	295	13
25341	J-23327	4910-01-178-0724	300	1
60380	J-2416	3110-01-155-4440	103	38
33287	J24396	4910-01-209-0729	294	6
33287	J-25018-A	5120-01-410-8216	300	4
33287	J25033-B	4910-01-179-2517	297	5
33287	J25323-1	3020-01-255-2906	298	7
33287	J-25323-101A	6680-01-253-6782	298	9
33287	J-25323-13	6685-01-256-3406	298	8
33287	J25323-17	4720-01-253-2809	298	3
33287	J25323-18	4720-01-253-2810	298	5
33287	J25323-2	4730-01-254-6023	298	6
33287	J26999-30	4910-01-238-2551	299	14
25341	J-29162	4910-01-179-5530	296	3
33287	J29163	5120-01-195-2721	295	4
33287	J29166	5120-01-196-0084	295	1
25341	J-29167	5120-01-170-3278	295	3

CAGE	PART NUMBER	STOCK NUMBER	FIG.	ITEM
25341	J-29168	5120-01-169-4876	295	2
33287	J29169	5120-01-185-7955	295	5
33287	J29170	5120-01-195-4551	295	11
33287	J29174	5120-01-185-7960	295	21
33287	J29185	5120-01-185-7956	295	8
33287	J29185-2	5120-01-247-6629	295	7
33287	J29369	5120-01-201-7857	295	20
33287	J29834	5120-01-209-6870	290	1
25341	J-29873	5120-01-171-5233	290	3
33287	J3289-20	5120-01-144-4484	293	3
25341	J-33043	4820-01-179-4869	301	14
33287	J33127	5180-01-186-3114	293	8
33287	J33139	4910-01-193-7808	289	1
33287	J33141	4910-01-231-1709	298	1
33287	J33142	5120-01-187-3659	296	4
33287	J33143	5120-01-187-3607	297	1
33287	J33144	5120-01-185-7963	297	2
33287	J-33149-A	5120-01-218-8235	296	5
33287	J-33826	5120-01-357-3633	295	15
33287	J-33829	5120-01-357-3629	295	16
33287	J-33831	5120-01-357-3632	295	12
33287	J-33833	5120-01-357-3630	295	17
33287	J-33839	5120-01-357-3631	295	18
33287	J-33843	5120-01-361-3101	295	14
33287	J-34175-4	5120-01-366-0894	302	9
33287	J35159	5120-01-242-8165	290	20
33287	J35160	5120-01-230-9421	290	19
45225	J-35169	4910-01-231-3671	293	7
33287	J35178	5120-01-206-3818	290	4
33287	J35178-1	5120-01-248-1808	290	5
33287	J35184	5120-01-229-0842	297	3
33287	J-35209	4730-01-042-5266	299	17
33287	J-35307	5120-01-265-4872	295	6
33287	J-35506-2	5120-01-366-6260	302	7
33287	J-35506-3	5120-01-366-0895	302	5
33287	J-37789-A	5120-01-422-1308	300	6
33287	J-38655	5120-01-422-1326	300	7
33287	J-38731-1	5120-01-422-0173	300	12
33287	J-38731-2	5120-01-422-0219	300	13
33287	J-38731-3A	5120-01-422-0139	300	14
33287	J-38731-A	5180-01-422-0138	300	11
33287	J-38732	5120-01-422-1301	301	5
33287	J-38732-1	5120-01-422-1293	301	6
33287	J-38734	5120-01-422-1329	300	10
33287	J-38736		300	15

CAGE	PART NUMBER	STOCK NUMBER	FIG.	ITEM
33287	J-38736-1	5120-01-422-1310	300	16
33287	J-38736-2	5120-01-422-5406	300	17
33287	J-38736-3	5120-01-422-5411	300	18
33287	J-38736-4	5120-01-422-1318	300	19
33287	J-38736-5	5120-01-422-1324	300	20
33287	J-38736-6	5120-01-408-7051	300	21
33287	J-38737	5120-01-422-1313	300	3
33287	J-38739	5180-01-422-1294	301	1
33287	J-38739-1	5120-01-422-1297	301	2
33287	J-38739-2	5120-01-422-1302	301	3
33287	J-38739-3	5120-01-422-1306	301	4
33287	J-38868-A	5120-01-422-1300	300	5
33287	J-38869	5120-01-414-1849	301	13
33287	J-39084	5120-01-422-0334	300	9
33287	J-39250	5120-01-335-5847	299	6
33287	J-39250-1		299	11
33287	J-39295	2530-01-338-3056	299	KIT
45225	J-39524	5180-01-363-8079	302	KIT
33287	J-39524-1	5120-01-366-2520	302	2
33287	J-39524-2	5120-01-366-0893	302	1
33287	J-39524-4	5140-01-366-0642	302	8
33287	J-39524-5	5120-01-366-4713	302	6
33287	J4670-01	5120-01-210-8793	293	2
33287	J6098-11	5120-01-248-1809	290	10
33287	J6098-12	5120-01-248-1810	290	11
33287	J6098-4	5120-01-247-4749	290	9
33287	J6221	5120-01-185-7965	297	9
25341	J-6278	5120-01-082-6447	297	7
33287	J6471-2	5120-01-130-8865	294	4
33287	J6471-8	5120-01-391-5131	295	9
33287	J6692	4910-00-785-6437	299	15
25341	J7624	5120-01-082-6436	297	6
33287	J7818	5120-01-185-8024	295	10
33287	J8092	5120-00-677-2259	294	1
81343	J844TYBSIZE3/8BLACK	4720-01-014-4915	BULK	56
33287	J8608	5120-01-185-7962	296	8
33287	J8763-B	5120-01-198-7583	293	4
33287	J-9276-3	5120-01-357-9123	295	19
56501	J974	5940-00-115-2685	49	5
81343	JAE J1508	4730-00-908-3193	276F	2
78940	L-111DR30-L		25	18
98349	L-18-CPS-5-A-10	5340-01-191-8161	134	15
98349	L-18-CPS-5-A-10	5340-01-191-8161	154	5
98349	L-18-SV-5150-C-12	2530-01-197-2160	134	16
98349	L-18-SV-5150-C-12	2530-01-197-2160	154	6

CROSS REFERENCE INDEXES
PART NUMBER

CAGE	PART NUMBER	STOCK NUMBER	FIG.	ITEM
98349	L-18-SV-5151-C-12	2530-01-189-2195	134	10
3ES68	L-223C26	5340-01-360-1758	25	25
3ES68	L-638C2GS	2520-01-024-1273	25	20
3ES68	L-952A59	5310-01-211-5037	25	22
60038	LM104949LM104911	3110-01-027-4475	113	9
60038	LM104949LM104911	3110-01-027-4475	119	9
60038	LM603049LM603012	3110-00-892-0896	117	18
24975	M014102573S	2920-01-290-9245	50	17
81349	M13486/1-12	6145-00-805-3354	BULK	41
81349	M13486/1-14	6145-00-705-6674	BULK	42
81349	M13486/1-5	6145-00-152-6499	BULK	61
81349	M13486-1-7	6145-00-705-6678	249B	2
81349	M13486-1-7	6145-00-705-6678	249B	20
80205	M17986C843	5315-01-495-0498	196G	48
61465	M2025103	5310-00-167-0821	85	2
3M915	M21C1000 40DT	5306-01-548-6805	276G	2
81343	M23053/15-102-2	5970-00-827-6566	49	10
81343	M23053/15-102-2	5970-00-827-6566	49	16
81343	M23053/15-102-2	5970-00-827-6566	66	12
81343	M23053/15-102-2	5970-00-827-6566	255	14
81343	M23053/15-202-0	5970-01-359-7836	84	13
81343	M23053/4-103-0	5970-01-048-9378	264	12
81343	M23053/5-104-0	5970-00-812-2969	249B	16
81349	M23469/2-30605	5320-01-333-5545	156	14
81349	M23469/2-30605	5320-01-333-5545	158	47
81349	M23469/2-50809		158	29
81349	M24243/1A402	5320-01-019-5694	207A	20
81349	M24243/1-A403	5320-00-083-5009	165	6
81349	M24243/1-A403	5320-00-083-5009	166	12
81349	M24243/1-A403	5320-00-083-5009	206	18
81349	M24243/1-A403	5320-00-083-5009	227	8
81349	M24243/1-A403	5320-00-083-5009	232	11
81349	M24243/1-A403	5320-00-083-5009	238	13
81349	M24243/1-A403	5320-00-083-5009	239	2
81349	M24243/1-A403	5320-00-083-5009	247	7
81349	M24243/1-A403	5320-00-083-5009	207A	21
81349	M24243/1-A403	5320-00-083-5009	227D	9
81349	M24243/1A404	5320-01-023-2529	157	1
81349	M24243/1A404	5320-01-023-2529	158	10
81349	M24243/1A404	5320-01-023-2529	226	8
81349	M24243/1A404	5320-01-023-2529	227A	10
81349	M24243/1A404	5320-01-023-2529	227C	6
81349	M24243/1A404	5320-01-023-2529	227C	29
81349	M24243/1-A404	5320-01-023-2529	212	22
81349	M24243/1A406	5320-01-333-9955	207B	5

CROSS REFERENCE INDEXES
PART NUMBER

CAGE	PART NUMBER	STOCK NUMBER	FIG.	ITEM
81349	M24243/3-A610	5320-00-490-2243	226A	1
81349	M32201-1		230	7
81349	M32201-1		230B	17
81349	M32201-2		230	7
81349	M32201-2		230B	17
81349	M43436/1-3	9905-00-893-3570	49	4
81349	M43436/1-3	9905-00-893-3570	49	11
81349	M43436/1-3	9905-00-893-3570	49	17
81349	M43436/1-3	9905-00-893-3570	66	13
81349	M43436/1-3	9905-00-893-3570	66	22
81349	M43436/1-3	9905-00-893-3570	66	27
81349	M43436/1-4	9905-00-945-7637	76	3
81349	M43436/3-1	9905-01-013-8723	71	5
81349	M43436/3-1	9905-01-013-8723	73	8
81349	M43436/3-1	9905-01-013-8723	77	6
81349	M43436/3-1	9905-01-013-8723	78	5
96906	M45912/3-6FG8C	5310-00-814-0672	72	21
81349	M45913/1-010CG5Z		201K	40
81349	M45913/1-10CG8C	5310-00-061-4651	149	16
81349	M45913/1-10CG8C	5310-00-061-4651	153	15
81349	M45913/1-10CG8C	5310-00-061-4651	155A	6
81349	M45913/1-4CG5C	5310-00-088-1251	56	15
81349	M45913/1-4CG5C	5310-00-088-1251	133	13
81349	M45913/1-5FG5C	5310-00-984-3807	123A	21
81349	M45913/3-010CG8Z	5310-01-501-3090	201O	6
96906	M45913/3-10CG8C	5310-00-061-4651	252A	1
81349	M45913/3-12CG8C	5310-00-409-3333	114	3
81349	M45913/3-12CG8C	5310-00-409-3333	143	2
81349	M45913/3-12CG8C	5310-00-409-3333	154	12
81349	M45913/3-12CG8C	5310-00-409-3333	141A	28
81349	M45913/3-12CG8C	5310-00-409-3333	142A	20
81349	M45913/3-12CG8C	5310-00-409-3333	144A	5
81349	M45913/3-12CG8C	5310-00-409-3333	150A	8
81349	M45913/3-12CG8C	5310-00-409-3333	207A	33
81349	M45913/3-12CG8C	5310-00-409-3333	225A	22
81349	M45913/3-12CG8Z	5310-00-409-3333	142	26
81349	M45913/3-12CG8Z	5310-00-409-3333	144	4
81349	M45913/3-12FG8C	5310-00-935-3569	252A	5
80205	M45913/3-4CG8C	5310-00-061-4650	27	19
81349	M45913/3-4CG8C	5310-00-061-4650	29	11
81349	M45913/3-4CG8C	5310-00-061-4650	30	4
81349	M45913/3-4CG8C	5310-00-061-4650	33	1
80205	M45913/3-4CG8C	5310-00-061-4650	51	26
80205	M45913/3-4CG8C	5310-00-061-4650	68	10
80205	M45913/3-4CG8C	5310-00-061-4650	79	29

CAGE	PART NUMBER	STOCK NUMBER	FIG.	ITEM
80205	M45913/3-4CG8C	5310-00-061-4650	79	31
80205	M45913/3-4CG8C	5310-00-061-4650	84	7
80205	M45913/3-4CG8C	5310-00-061-4650	112	17
80205	M45913/3-4CG8C	5310-00-061-4650	118	16
80205	M45913/3-4CG8C	5310-00-061-4650	121	3
80205	M45913/3-4CG8C	5310-00-061-4650	133	27
80205	M45913/3-4CG8C	5310-00-061-4650	139	16
80205	M45913/3-4CG8C	5310-00-061-4650	140	20
80205	M45913/3-4CG8C	5310-00-061-4650	158	22
81349	M45913/3-4CG8C	5310-00-061-4650	160	28
80205	M45913/3-4CG8C	5310-00-061-4650	161	9
81349	M45913/3-4CG8C	5310-00-061-4650	162	22
80205	M45913/3-4CG8C	5310-00-061-4650	164	1
80205	M45913/3-4CG8C	5310-00-061-4650	201	3
80205	M45913/3-4CG8C	5310-00-061-4650	203	4
80205	M45913/3-4CG8C	5310-00-061-4650	205	12
80205	M45913/3-4CG8C	5310-00-061-4650	206	1
80205	M45913/3-4CG8C	5310-00-061-4650	226	21
80205	M45913/3-4CG8C	5310-00-061-4650	232	1
80205	M45913/3-4CG8C	5310-00-061-4650	233	40
80205	M45913/3-4CG8C	5310-00-061-4650	235	6
80205	M45913/3-4CG8C	5310-00-061-4650	249	31
81349	M45913/3-4CG8C	5310-00-061-4650	250	19
80205	M45913/3-4CG8C	5310-00-061-4650	138A	23
80205	M45913/3-4CG8C	5310-00-061-4650	164A	1
81349	M45913/3-4CG8C	5310-00-061-4650	166B	13
81349	M45913/3-4CG8C	5310-00-061-4650	167G	14
81349	M45913/3-4CG8C	5310-00-061-4650	167H	7
81349	M45913/3-4CG8C	5310-00-061-4650	167T	28
81349	M45913/3-4CG8C	5310-00-061-4650	167U	19
81349	M45913/3-4CG8C	5310-00-061-4650	169J	25
81349	M45913/3-4CG8C	5310-00-061-4650	196C	20
81349	M45913/3-4CG8C	5310-00-061-4650	196G	11
81349	M45913/3-4CG8C	5310-00-061-4650	200F	7
80205	M45913/3-4CG8C	5310-00-061-4650	202B	15
81349	M45913/3-4CG8C	5310-00-061-4650	202D	12
81349	M45913/3-4CG8C	5310-00-061-4650	204A	27
81349	M45913/3-4CG8C	5310-00-061-4650	204B	28
80205	M45913/3-4CG8C	5310-00-061-4650	207A	1
81349	M45913/3-4CG8C	5310-00-061-4650	235A	5
80205	M45913/3-4CG8C	5310-00-061-4650	249A	25
80205	M45913/3-4CG8C	5310-00-061-4650	249D	2
80205	M45913/3-4CG8C	5310-00-061-4650	249E	2
80205	M45913/3-4CG8C	5310-00-061-4650	249E	11
81349	M45913/3-4CG8C	5310-00-061-4650	252D	3

CAGE	PART NUMBER	STOCK NUMBER	FIG.	ITEM
80205	M45913/3-4CG8C	5310-00-061-4650	266I	13
80205	M45913/3-4CG8C	5310-00-061-4650	266K	3
80205	M45913/3-4CG8C	5310-00-061-4650	266L	20
81349	M45913/3-4CG8C	5310-00-061-4650	266M	9
81349	M45913/3-4CG8C	5310-00-061-4650	266O	5
80205	M45913/3-4CG8C	5310-00-061-4650	40A	9
81349	M45913/3-4CG8Z	5310-01-518-7173	100	16
81349	M45913/3-4CG8Z	5310-01-518-7173	200E	18
81349	M45913/3-5CG8C	5310-00-814-0673	70	8
81349	M45913/3-5CG8C	5310-00-814-0673	80	7
81349	M45913/3-5CG8C	5310-00-814-0673	122	7
81349	M45913/3-5CG8C	5310-00-814-0673	133	33
81349	M45913/3-5CG8C	5310-00-814-0673	147	1
81349	M45913/3-5CG8C	5310-00-814-0673	163	6
81349	M45913/3-5CG8C	5310-00-814-0673	165	26
81349	M45913/3-5CG8C	5310-00-814-0673	204	10
81349	M45913/3-5CG8C	5310-00-814-0673	204	29
81349	M45913/3-5CG8C	5310-00-814-0673	206	5
81349	M45913/3-5CG8C	5310-00-814-0673	208	1
81349	M45913/3-5CG8C	5310-00-814-0673	212	28
81349	M45913/3-5CG8C	5310-00-814-0673	217	6
81349	M45913/3-5CG8C	5310-00-814-0673	230	13
81349	M45913/3-5CG8C	5310-00-814-0673	236	10
81349	M45913/3-5CG8C	5310-00-814-0673	237	13
81349	M45913/3-5CG8C	5310-00-814-0673	249	12
81349	M45913/3-5CG8C	5310-00-814-0673	126A	33
81349	M45913/3-5CG8C	5310-00-814-0673	163A	6
81349	M45913/3-5CG8C	5310-00-814-0673	164A	13
81349	M45913/3-5CG8C	5310-00-814-0673	167C	7
81349	M45913/3-5CG8C	5310-00-814-0673	167D	8
81349	M45913/3-5CG8C	5310-00-814-0673	167H	25
81349	M45913/3-5CG8C	5310-00-814-0673	167U	3
81349	M45913/3-5CG8C	5310-00-814-0673	189E	12
81349	M45913/3-5CG8C	5310-00-814-0673	195D	3
81349	M45913/3-5CG8C	5310-00-814-0673	202E	3
81349	M45913/3-5CG8C	5310-00-814-0673	204B	15
81349	M45913/3-5CG8C	5310-00-814-0673	205A	12
81349	M45913/3-5CG8C	5310-00-814-0673	217A	6
81349	M45913/3-5CG8C	5310-00-814-0673	230A	13
81349	M45913/3-5CG8C	5310-00-814-0673	230B	22
81349	M45913/3-5CG8C	5310-00-814-0673	265F	1
81349	M45913/3-5CG8C	5310-00-814-0673	266A	8
81349	M45913/3-5CG8C	5310-00-814-0673	266B	12
81349	M45913/3-5CG8C	5310-00-814-0673	266O	11
81349	M45913/3-5CG8C	5310-00-814-0673	266P	4

CAGE	PART NUMBER	STOCK NUMBER	FIG.	ITEM
81349	M45913/3-5CG8Z	5310-01-500-3204	112	22
81349	M45913/3-5CG8Z	5310-01-500-3204	164	13
81349	M45913/3-5CG8Z	5310-01-500-3204	167	14
81349	M45913/3-5CG8Z	5310-01-500-3204	233	22
81349	M45913/3-5CG8Z	5310-01-500-3204	167A	14
81349	M45913/3-5CG8Z	5310-01-500-3204	249B	26
81349	M45913/3-5FG8C	5310-00-241-6658	122	6
81349	M45913/3-5FG8C	5310-00-241-6658	157	17
81349	M45913/3-5FG8C	5310-00-241-6658	158	1
81349	M45913/3-5FG8C	5310-00-241-6658	200	27
81349	M45913/3-5FG8C	5310-00-241-6658	227	11
81349	M45913/3-5FG8C	5310-00-241-6658	247	8
81349	M45913/3-5FG8C	5310-00-241-6658	166A	47
81349	M45913/3-5FG8C	5310-00-241-6658	167B	47
81349	M45913/3-5FG8C	5310-00-241-6658	167C	8
81349	M45913/3-5FG8C	5310-00-241-6658	196B	16
81349	M45913/3-5FG8C	5310-00-241-6658	196D	35
81349	M45913/3-5FG8C	5310-00-241-6658	196G	40
81349	M45913/3-5FG8C	5310-00-241-6658	227D	30
81349	M45913/3-6CG8C	5310-01-509-2488	25	45
81349	M45913/3-6CG8C	5310-01-509-2488	87	15
81349	M45913/3-6CG8C	5310-01-509-2488	129	6
81349	M45913/3-6CG8C	5310-01-509-2488	133	1
81349	M45913/3-6CG8C	5310-01-509-2488	146	2
81349	M45913/3-6CG8C	5310-01-509-2488	147	3
81349	M45913/3-6CG8C	5310-01-509-2488	204	19
81349	M45913/3-6CG8C	5310-01-509-2488	206	19
81349	M45913/3-6CG8C	5310-01-509-2488	208	25
81349	M45913/3-6CG8C	5310-01-509-2488	235	14
81349	M45913/3-6CG8C	5310-01-509-2488	250	17
81349	M45913/3-6CG8C	5310-01-509-2488	128A	12
81349	M45913/3-6CG8C	5310-01-509-2488	150A	9
81349	M45913/3-6CG8C	5310-01-509-2488	163A	10
81349	M45913/3-6CG8C	5310-01-509-2488	167H	32
81349	M45913/3-6CG8C	5310-01-509-2488	167U	31
81349	M45913/3-6CG8C	5310-01-509-2488	189A	4
81349	M45913/3-6CG8C	5310-01-509-2488	189B	2
81349	M45913/3-6CG8C	5310-01-509-2488	189C	18
81349	M45913/3-6CG8C	5310-01-509-2488	189D	2
81349	M45913/3-6CG8C	5310-01-509-2488	189G	17
81349	M45913/3-6CG8C	5310-01-509-2488	189I	7
81349	M45913/3-6CG8C	5310-01-509-2488	189J	1
81349	M45913/3-6CG8C	5310-01-509-2488	189K	1
81349	M45913/3-6CG8C	5310-01-509-2488	189L	2
81349	M45913/3-6CG8C	5310-01-509-2488	189M	6

CAGE	PART NUMBER	STOCK NUMBER	FIG.	ITEM
81349	M45913/3-6CG8C	5310-01-509-2488	189N	2
81349	M45913/3-6CG8C	5310-01-509-2488	189O	7
81349	M45913/3-6CG8C	5310-01-509-2488	189O	13
81349	M45913/3-6CG8C	5310-01-509-2488	189Q	8
81349	M45913/3-6CG8C	5310-01-509-2488	195D	4
81349	M45913/3-6CG8C	5310-01-509-2488	195E	16
81349	M45913/3-6CG8C	5310-01-509-2488	195I	10
81349	M45913/3-6CG8C	5310-01-509-2488	195J	13
81349	M45913/3-6CG8C	5310-01-509-2488	196C	19
81349	M45913/3-6CG8C	5310-01-509-2488	196D	4
81349	M45913/3-6CG8C	5310-01-509-2488	196G	35
81349	M45913/3-6CG8C	5310-01-509-2488	202B	13
81349	M45913/3-6CG8C	5310-01-509-2488	202D	19
81349	M45913/3-6CG8C	5310-01-509-2488	207A	30
81349	M45913/3-6CG8C	5310-01-509-2488	230B	9
81349	M45913/3-6CG8C	5310-01-509-2488	265B	13
81349	M45913/3-6CG8C	5310-01-509-2488	265D	12
81349	M45913/3-6CG8C	5310-01-509-2488	265E	6
81349	M45913/3-6CG8C	5310-01-509-2488	265H	15
81349	M45913/3-6CG8C	5310-01-509-2488	266B	3
81349	M45913/3-6CG8C	5310-01-509-2488	266C	1
81349	M45913/3-6CG8C	5310-01-509-2488	266J	18
81349	M45913/3-6CG8Z	5310-01-500-3209	189P	6
81349	M45913/3-6CG8Z	5310-01-500-3209	195F	3
81349	M45913/3-6CG8Z	5310-01-500-3209	195K	10
81349	M45913/3-6CG8Z	5310-01-500-3209	200H	6
96906	M45913/3-6FG8C	5310-00-814-0672	114	4
81349	M45913/3-7CG8C	5310-00-241-6659	154	9
81349	M45913/3-8CG8Z	5310-01-501-3086	142	6
81349	M45913/3-8CG8Z	5310-01-501-3086	142A	4
81349	M45913/38FG8C	5310-00-488-3888	153	2
81349	M45913/4-010CG8Z		200E	4
81349	M45913/4-010CG8Z		200F	17
81349	M45913/4-010CG8Z		201H	7
81349	M45913/4-010CG8Z		201J	10
81349	M45913/4-10CG8Z	5310-01-570-7523	148	17
81349	M45913/4-10CG8Z	5310-01-570-7523	149	16
81349	M45913/4-10CG8Z	5310-01-570-7523	141A	25
81349	M45913/4-10CG8Z	5310-01-570-7523	201G	13
81349	M45913/4-12CG8C	5310-01-535-8822	120	3
81349	M45913/4-12CG8Z		145	13
81349	M45913/4-12CG8Z		207B	18
81349	M45913/4-4CG8C	5310-01-510-1237	35	23
81349	M45913/4-4CG8Z	5310-01-548-1269	12	7
81349	M45913/4-4CG8Z	5310-01-548-1269	28	3

CAGE	PART NUMBER	STOCK NUMBER	FIG.	ITEM
81349	M45913/4-4CG8Z	5310-01-548-1269	37	12
81349	M45913/4-4CG8Z	5310-01-548-1269	40	3
81349	M45913/4-4CG8Z	5310-01-548-1269	83	4
81349	M45913/4-4CG8Z	5310-01-548-1269	142	9
81349	M45913/4-4CG8Z	5310-01-548-1269	207	5
81349	M45913/4-4CG8Z	5310-01-548-1269	207	22
81349	M45913/4-4CG8Z	5310-01-548-1269	252	13
81349	M45913/4-4CG8Z	5310-01-548-1269	100A	10
81349	M45913/4-4CG8Z	5310-01-548-1269	12A	5
81349	M45913/4-4CG8Z	5310-01-548-1269	200E	16
81349	M45913/4-4CG8Z	5310-01-548-1269	200G	2
81349	M45913/4-4CG8Z	5310-01-548-1269	200H	9
81349	M45913/4-4CG8Z	5310-01-548-1269	200H	33
81349	M45913/4-4CG8Z	5310-01-548-1269	201G	9
81349	M45913/4-4CG8Z	5310-01-548-1269	201K	32
81349	M45913/4-4CG8Z	5310-01-548-1269	201M	9
81349	M45913/4-4CG8Z	5310-01-548-1269	201N	5
81349	M45913/4-4CG8Z	5310-01-548-1269	205C	7
81349	M45913/4-4CG8Z	5310-01-548-1269	207B	17
81349	M45913/4-4CG8Z	5310-01-548-1269	209B	6
81349	M45913/4-4CG8Z	5310-01-548-1269	209B	12
81349	M45913/4-4CG8Z	5310-01-548-1269	225K	4
81349	M45913/4-4CG8Z	5310-01-548-1269	267A	5
81349	M45913/4-4CG8Z	5310-01-548-1269	38A	6
96906	M45913/4-5CG8C	5310-01-558-5168	266F	7
7X677	M45913/4-5CG8Z	5310-01-269-9245	79	4
81349	M45913/4-5CG8Z	5310-01-563-9653	146	6
81349	M45913/4-5CG8Z	5310-01-563-9653	163	6
7X677	M45913/4-5CG8Z	5310-01-269-9245	232	36
96906	M45913/4-5CG8Z	5310-01-563-9653	210A	12
81349	M45913/4-5CG8Z	5310-01-563-9653	230B	18
81349	M45913/4-6CG8C	5310-01-490-4433	35	10
81349	M45913/4-6CG8C	5310-01-490-4433	265	13
81349	M45913/4-6CG8C	5310-01-490-4433	266H	2
96906	M45913/4-6CG8Z	5310-01-542-0395	2	15
96906	M45913/4-6CG8Z	5310-01-542-0395	36	7
96906	M45913/4-6CG8Z	5310-01-542-0395	129	5
96906	M45913/4-6CG8Z	5310-01-542-0395	163	9
96906	M45913/4-6CG8Z	5310-01-542-0395	230	16
96906	M45913/4-6CG8Z	5310-01-542-0395	265	6
96906	M45913/4-6CG8Z	5310-01-542-0395	143A	1
96906	M45913/4-6CG8Z	5310-01-542-0395	196B	21
96906	M45913/4-6CG8Z	5310-01-542-0395	201F	8
96906	M45913/4-6CG8Z	5310-01-542-0395	201G	23
96906	M45913/4-6CG8Z	5310-01-542-0395	201I	6

CAGE	PART NUMBER	STOCK NUMBER	FIG.	ITEM
96906	M45913/4-6CG8Z	5310-01-542-0395	201M	15
80205	M45913/4-6CG8Z	5310-01-542-0395	208A	28
96906	M45913/4-6CG8Z	5310-01-542-0395	235A	14
96906	M45913/4-6CG8Z	5310-01-542-0395	38A	9
96906	M45913/4-6FG8Z	5310-01-552-9654	200A	5
96906	M45913/4-6FG8Z	5310-01-552-9654	200C	13
96906	M45913/4-6FG8Z	5310-01-552-9654	200D	13
96906	M45913/4-6FG8Z	5310-01-552-9654	200E	10
96906	M45913/4-6FG8Z	5310-01-552-9654	200F	25
96906	M45913/4-6FG8Z	5310-01-552-9654	201D	6
96906	M45913/4-6FG8Z	5310-01-552-9654	201J	17
81349	M45913/4-7CG8Z	5310-01-565-5271	134	13
81349	M45913/4-7CG8Z	5310-01-565-5271	154	9
81349	M45913/4-7CG8Z	5310-01-565-5271	201L	31
81349	M45913/4-8CG8Z	5310-01-548-1848	2	8
81349	M45913/4-8CG8Z	5310-01-548-1848	111	1
81349	M45913/4-8CG8Z	5310-01-548-1848	142	21
81349	M45913/4-8CG8Z	5310-01-548-1848	143	4
81349	M45913/4-8CG8Z	5310-01-548-1848	144	13
81349	M45913/4-8CG8Z	5310-01-548-1848	148	3
81349	M45913/4-8CG8Z	5310-01-548-1848	149	5
81349	M45913/4-8CG8Z	5310-01-548-1848	141A	9
81349	M45913/4-8CG8Z	5310-01-548-1848	143A	12
81349	M45913/4-8CG8Z	5310-01-548-1848	144A	4
81349	M45913/4-8CG8Z	5310-01-548-1848	200H	12
81349	M45913/4-8CG8Z	5310-01-548-1848	201F	7
81349	M45913/4-8CG8Z	5310-01-548-1848	201K	9
81349	M45913/4-8CG8Z	5310-01-548-1848	226A	2
96906	M45913/4-8FG8Z	5310-01-568-0729	207B	40
81349	M5501/7-F2	5340-01-026-3250	161	10
59150	M68509-01425	2940-01-176-1427	268	1
60038	M802048M802011	3110-00-406-9608	117	17
81343	M83461/1-020	5331-01-107-4950	13	2
81343	M83461/1-030	5331-01-392-1793	69	11
81343	M83461/1-125	5331-01-097-6619	69	13
81343	M83461/1-208	5331-01-392-0830	69	15
81343	M83461/1-236	5331-01-183-0971	13	8
43334	M88048M88010	3110-00-854-1504	117	6
34623	MA128-21182	5330-01-037-0663	60	9
19728	MAD-110A		50	68
19728	MAW-37		50	53
19728	MBD-233B		50	64
19728	MBD-2566		50	38
19728	MBD-438		50	55
19728	MBD-439		50	63

CAGE	PART NUMBER	STOCK NUMBER	FIG.	ITEM
19728	MBD-442		50	56
19728	MBD-444		50	54
68505	MCS47A	5365-00-200-7229	50	11
24975	MEL50	3120-00-450-1905	50	18
19728	MES-117A		50	13
19728	MES-61		50	16
19728	MES-71A		50	71
19728	MES-72		50	72
19728	MES-78A		50	77
19728	MES-91		50	75
19728	MES-93		50	74
19728	MES-94		50	73
24975	MES-95	5330-00-138-0251	50	41
24975	MEU-2042B	3010-01-068-6996	50	12
19728	MFJ-13A		50	46
24975	MFJ-2012BS	5977-01-189-4988	KITS	3
19728	MFJ-28A		50	70
24975	MFY-1064B	5977-01-324-6323	50	45
24975	MFY-109	2920-01-211-4935	50	79
68505	MFY1102S	2920-01-212-4976	50	67
19728	MFY-117		50	69
19728	MFY-133		50	7
19728	MFY-19		50	48
24975	MFY-19S	5360-01-190-7234	KITS	4
19728	MFY-21		50	66
19728	MFY-2101SS		50	42
24975	MFY-2130	2990-01-205-5981	50	2
19728	MFY-25		50	6
19728	MFY-53		50	10
19728	MFY-63		50	15
68505	MFY-6701UT	2920-01-168-7891	48	2
9K475	MGLP-B6-4	5320-01-271-6357	68	9
9K475	MGLP-B6-4	5320-01-271-6357	158	12
9K475	MGLP-B6-4	5320-01-271-6357	216	15
9K475	MGLP-B6-4	5320-01-271-6357	235A	8
81349	MILC5040TYPE3	4020-00-246-0688	BULK	2
81349	MIL-DTL-23444, TYPE I, SIZE 4	4720-00-684-4033	BULK	7
96906	MIL-DTL-45913/3A-M5913/3-12CG8	5310-00-409-3333	253	23
81349	MIL-W-83420/2-002		BULK	52
19728	ML-128A		50	40
19728	ML-129	5310-00-883-2237	50	1
76599	MMF4-SS	4730-01-118-8278	27	6
76599	MMF4-SS	4730-01-118-8278	31	11
96906	MS122031	5310-00-285-7037	205	26
96906	MS122031	5310-00-285-7037	205A	24

CAGE	PART NUMBER	STOCK NUMBER	FIG.	ITEM
80205	MS14151-5	5310-01-058-3986	236	13
80205	MS15795-815	5310-00-595-6057	267	14
80205	MS15795-841	5310-00-225-5328	74	2
80205	MS15795-908	5310-00-045-5207	66	32
80205	MS15795-918	5310-00-045-5218	67	5
80205	MS16562-253	5315-00-058-9808	181	10
80205	MS16562-256	5315-00-753-3895	160	23
80205	MS16562-47	5315-00-844-3964	167T	59
96906	MS16624-1025	5325-00-720-8064	200H	21
96906	MS16624-1066	5325-00-282-1830	163	23
96906	MS16624-1066	5325-00-282-1830	163A	24
96906	MS16624-1093	5325-00-804-2027	24	17
96906	MS16633-1050	5325-00-442-5845	123	7
96906	MS16633-1050	5325-00-442-5845	123A	22
96906	MS16633-1050	5325-00-442-5845	166A	42
96906	MS16633-1050	5325-00-442-5845	167B	42
80205	MS16995-49	5305-00-988-7613	200E	3
80205	MS16995-77	5305-00-051-8605	12	25
80205	MS16995-77	5305-00-051-8605	112	11
80205	MS16995-77	5305-00-051-8605	118	9
80205	MS16995-77	5305-00-051-8605	127	4
80205	MS16995-78	5305-00-226-7237	25	32
80205	MS16996-10	5305-00-052-6456	44	16
96906	MS16997-142	5305-00-187-9934	225H	2
96906	MS16997-142	5305-00-187-9934	252F	2
96906	MS16997-81	5305-00-983-6622	225I	2
96906	MS16998-78	5305-00-983-7452	200C	5
96906	MS171648	5315-00-597-3693	201	9
96906	MS17795-128	3120-00-425-6467	50	4
80205	MS17829-4F	5310-00-483-8791	227D	18
96906	MS17830-4C	5310-00-241-6604	79	25
80205	MS17984C303	5315-00-993-5276	201J	11
80205	MS17986C1009	5315-01-473-1590	265	2
80205	MS17986C305	5315-00-886-5726	200F	3
80205	MS17986C416	5315-00-973-8637	200H	26
80205	MS17986C424	5315-01-145-5251	201K	11
80205	MS17986C513	5315-00-765-2190	201B	18
80205	MS17986C513	5315-00-765-2190	201L	11
96906	MS17986-C840	5315-00-150-2793	196C	3
80205	MS17986C843	5315-01-495-0498	201F	6
96906	MS18029-13S-8	5940-00-926-8034	BULK	53
96906	MS18029-5S2	5940-01-361-5200	236	21
96906	MS19061-20007	3110-00-900-2560	97	11
96906	MS20002-20	5310-00-515-8776	263	14
96906	MS20392-3C39	5315-00-770-9181	266J	12

CAGE	PART NUMBER	STOCK NUMBER	FIG.	ITEM
96906	MS20392-3C39	5315-00-770-9181	266L	17
96906	MS20392-3C39	5315-00-770-9181	266N	2
96906	MS20392-3C67	5315-00-840-9653	201K	22
96906	MS20392-3C77	5315-00-081-7021	201K	18
96906	MS20392-4C69	5315-00-983-7402	204	8
96906	MS20392-4C69	5315-00-983-7402	201K	45
96906	MS20392-8C101	5315-01-444-8970	201K	24
80205	MS20470AD6-10	5320-00-721-9062	156	15
80205	MS20470AD6-10	5320-00-721-9062	158	46
80205	MS20470AD6-7	5320-00-754-0992	157	5
80205	MS20470AD6-8	5320-00-117-6853	156	8
80205	MS20470AD6-8	5320-00-117-6853	158	52
80205	MS20604B4W1	5320-00-957-2500	243	2
96906	MS20604-FL4C4		249	15
96906	MS20659-104	5940-00-107-1481	71	7
96906	MS20659-142	5940-00-114-1315	71	12
96906	MS20668-4	1640-00-132-9181	196C	7
96906	MS20913-6S	4730-00-221-2140	246	12
80205	MS21042-08	5310-00-807-1466	196B	14
80205	MS21042-08	5310-00-807-1466	196C	9
80205	MS21042L4	5310-00-807-1475	201B	13
80205	MS21042L4	5310-00-807-1475	201L	16
80205	MS21042L5	5310-00-807-1476	201B	16
80205	MS21042L5	5310-00-807-1476	201L	17
80205	MS21042L6	5310-00-807-1477	201B	25
80205	MS21042L6	5310-00-807-1477	201L	25
96906	MS21045-6	5310-00-982-4908	102	22
80205	MS21083N08	5310-00-941-6019	117D	7
80205	MS21083N08	5310-00-941-6019	200F	10
80205	MS21245-8	5310-00-449-2376	131	13
80205	MS21245-8	5310-00-449-2376	150	14
80205	MS21245-8	5310-00-449-2376	131A	14
80205	MS21245L12	5310-00-419-0876	46	25
96906	MS21266-2N	5325-00-074-3301	BULK	4
80205	MS21318-14	5305-00-175-3230	189P	11
80205	MS21318-47	5305-00-253-5626	150	16
80205	MS21318-48	5305-00-253-5627	243	8
80205	MS21333-100	5340-00-809-1492	228	49
80205	MS21333-100	5340-00-809-1492	100A	9
08205	MS21333-100	5340-00-809-1492	117G	2
80205	MS21333-100	5340-00-809-1492	228A	48
80205	MS21333-101	5340-00-088-6655	81	28
80205	MS21333-101	5340-00-088-6655	266M	13
80205	MS21333-102	5340-00-984-8540	29	15
80205	MS21333-102	5340-00-984-8540	31	13

CROSS REFERENCE INDEXES
PART NUMBER

CAGE	PART NUMBER	STOCK NUMBER	FIG.	ITEM
80205	MS21333-102	5340-00-984-8540	37	10
80205	MS21333-102	5340-00-984-8540	63	10
80205	MS21333-102	5340-00-984-8540	79	11
80205	MS21333-102	5340-00-984-8540	79	32
80205	MS21333-102	5340-00-984-8540	126	3
80205	MS21333-102	5340-00-984-8540	266O	13
96906	MS21333-103	5340-00-854-6729	79	28
96906	MS21333-103	5340-00-854-6729	140	7
96906	MS21333-103	5340-00-854-6729	237	24
80205	MS21333-104	5340-00-088-1254	79	21
80205	MS21333-104	5340-00-088-1254	80	26
80205	MS21333-104	5340-00-088-1254	81	9
80205	MS21333-104	5340-00-088-1254	123	1
80205	MS21333-104	5340-00-088-1254	139	15
80205	MS21333-104	5340-00-088-1254	140	22
80205	MS21333-104	5340-00-088-1254	100A	24
80205	MS21333-104	5340-00-088-1254	117G	9
80205	MS21333-104	5340-00-088-1254	117H	6
80205	MS21333-104	5340-00-088-1254	138A	19
80205	MS21333-105	5340-00-809-1494	49	7
80205	MS21333-105	5340-00-809-1494	72	8
80205	MS21333-105	5340-00-809-1494	79	18
80205	MS21333-105	5340-00-809-1494	81	12
80205	MS21333-106	5340-00-984-8541	49	13
80205	MS21333-106	5340-00-984-8541	228	27
96906	MS21333-106	5340-00-984-8541	252D	4
80205	MS21333-107	5340-00-809-1500	72	30
80205	MS21333-109	5340-00-067-3868	107	2
80205	MS21333-109	5340-00-067-3868	112	24
80205	MS21333-109	5340-00-067-3868	264	11
96906	MS21333-112	5340-00-057-3043	81	20
96906	MS21333-112	5340-00-057-3043	126	25
96906	MS21333-112	5340-00-057-3043	127	11
96906	MS21333-119	5340-00-050-9077	99	7
96906	MS21333-119	5340-00-050-9077	112	27
96906	MS21333-119	5340-00-050-9077	118	8
96906	MS21333-119	5340-00-050-9077	159	7
96906	MS21333-119	5340-00-050-9077	44A	24
80205	MS21333-121	5340-00-954-6014	100	19
80205	MS21333-121	5340-00-954-6014	100A	23
80205	MS21333-121	5340-00-954-6014	126A	22
80205	MS21333-121	5340-00-954-6014	127A	2
80205	MS21333-122	5340-00-833-8476	74	9
80205	MS21333-123	5340-00-989-1771	29	1
80205	MS21333-123	5340-00-989-1771	30	11

CROSS REFERENCE INDEXES
PART NUMBER

CAGE	PART NUMBER	STOCK NUMBER	FIG.	ITEM
80205	MS21333-123	5340-00-989-1771	79	35
80205	MS21333-123	5340-00-989-1771	99	6
80205	MS21333-123	5340-00-989-1771	112	12
80205	MS21333-124	5340-00-854-6730	39	6
80205	MS21333-124	5340-00-854-6730	237	14
80205	MS21333-124	5340-00-854-6730	39A	6
80205	MS21333-125	5340-00-725-5280	30	12
80205	MS21333-125	5340-00-725-5280	103A	7
80205	MS21333-125	5340-00-725-5280	249C	4
80205	MS21333-125	5340-00-725-5280	99A	3
80205	MS21333-126	5340-00-053-8994	72	18
80205	MS21333-127	5340-00-833-3049	99	1
80205	MS21333-128	5340-00-702-2848	200G	3
80205	MS21333-129	5340-00-151-9651	72	20
80205	MS21333-16	5340-00-177-3711	249B	14
96906	MS21333-33	5340-00-827-8314	127A	10
80205	MS21333-42	5340-00-282-7517	228A	27
96906	MS21333-45	5340-00-881-5303	21	7
80205	MS21333-67	5340-00-079-7837	33	17
80205	MS21333-67	5340-00-079-7837	250	2
80205	MS21333-67	5340-00-079-7837	252	9
80205	MS21333-67	5340-00-079-7837	267A	2
80205	MS21333-68	5340-00-843-7825	79	10
80205	MS21333-68	5340-00-843-7825	80	13
80205	MS21333-68	5340-00-843-7825	228	31
80205	MS21333-68	5340-00-843-7825	267	8
80205	MS21333-68	5340-00-843-7825	228A	31
80205	MS21333-69	5340-00-764-7051	72	2
80205	MS21333-69	5340-00-764-7051	79	37
80205	MS21333-69	5340-00-764-7051	80	27
80205	MS21333-69	5340-00-764-7051	117D	3
80205	MS21333-70	5340-00-689-9514	79	3
80205	MS21333-70	5340-00-689-9514	81	13
96906	MS21333-70	5340-00-689-9514	267	7
80205	MS21333-71	5340-00-057-2904	72	14
80205	MS21333-71	5340-00-057-2904	74	10
80205	MS21333-71	5340-00-057-2904	79	38
80205	MS21333-71	5340-00-057-2904	80	18
80205	MS21333-71	5340-00-057-2904	80	19
80205	MS21333-71	5340-00-057-2904	81	16
80205	MS21333-71	5340-00-057-2904	237	19
80205	MS21333-72	5340-00-091-3790	74	5
80205	MS21333-72	5340-00-091-3790	79	8
80205	MS21333-72	5340-00-091-3790	80	10
96906	MS21333-73	5340-00-057-2906	237	15

CAGE	PART NUMBER	STOCK NUMBER	FIG.	ITEM
96906	MS21333-73	5340-00-057-2906	263	4
96906	MS21333-73	5340-00-057-2906	200G	5
80205	MS21333-74	5340-00-989-9222	79	16
80205	MS21333-74	5340-00-989-9222	80	9
80205	MS21333-74	5340-00-989-9222	81	3
80205	MS21333-74	5340-00-989-9222	139	19
80205	MS21333-74	5340-00-989-9222	236	14
80205	MS21333-75	5340-00-050-2740	79	19
80205	MS21333-75	5340-00-050-2740	80	11
80205	MS21333-75	5340-00-050-2740	81	6
80205	MS21333-75	5340-00-050-2740	237	17
96906	MS21333-76	5340-00-724-7038	80	21
96906	MS21333-76	5340-00-724-7038	249B	13
80205	MS21333-77	5340-00-922-6300	80	15
80205	MS21333-78	5340-00-958-8457	72	24
80205	MS21333-81	5340-00-922-6302	72	23
96906	MS21333-82	5340-00-904-3705	80	18
96906	MS21333-82	5340-00-904-3705	258	4
96906	MS21333-96	5340-00-088-1255	264	7
80205	MS21333-98	5340-00-809-1490	81	26
80205	MS21333-98	5340-00-809-1490	118	14
80205	MS21333-98	5340-00-809-1490	252	11
80205	MS21333-98	5340-00-809-1490	267A	4
96906	MS21333-99	5340-00-993-6207	249A	26
96906	MS21333-99	5340-00-993-6207	249D	14
96906	MS21334-26	5340-00-901-8132	117D	6
80205	MS21334-28	5340-00-926-5449	255	20
80205	MS21334-31	5340-00-929-1794	258	6
80205	MS21334-34	5340-00-731-9611	225C	2
80205	MS2133-66	5340-00-990-7610	232	15
81343	MS23053/5-104-0	5970-00-812-2969	BULK	48
81343	MS23053/5-104-0	5970-00-812-2969	BULK	59
81343	MS23053/5-104-0-2		249A	19
96906	MS24520-7	4730-01-394-8129	249A	29
81349	MS24537	6685-01-180-9037	52	9
96906	MS24539	6620-00-993-5546	62	8
96906	MS24585-281	5360-00-902-8068	196C	29
80205	MS24629-26	5305-00-855-0963	200G	7
80205	MS24629-57	5305-00-052-6921	38	2
80205	MS24629-73	5305-00-204-4850	228	17
80205	MS24629-73	5305-00-204-4850	228A	17
80205	MS24630-13	5305-00-052-8881	252H	4
80205	MS24630-28	5305-01-006-2043	201B	28
80205	MS24665-132	5315-00-839-2325	201K	16
80205	MS24665-134	5315-00-839-5820	160	19

CROSS REFERENCE INDEXES
PART NUMBER

CAGE	PART NUMBER	STOCK NUMBER	FIG.	ITEM
80205	MS24665-281	5315-00-839-2326	162	1
80205	MS24665-281	5315-00-839-2326	196C	31
80205	MS24665-283	5315-00-842-3044	85	1
80205	MS24665-283	5315-00-842-3044	121	11
80205	MS24665-283	5315-00-842-3044	123	19
80205	MS24665-283	5315-00-842-3044	163	13
80205	MS24665-283	5315-00-842-3044	123A	9
80205	MS24665-283	5315-00-842-3044	163A	14
80205	MS24665-283	5315-00-842-3044	201K	26
80205	MS24665-285	5315-01-359-1451	130	7
80205	MS24665-298	5315-00-234-1861	204	9
80205	MS24665-351	5315-00-839-5821	106	1
80205	MS24665-351	5315-00-839-5821	167H	5
80205	MS24665-351	5315-00-839-5821	167T	18
80205	MS24665-351	5315-00-839-5821	169J	18
80205	MS24665-355	5315-00-012-0123	114	12
80205	MS24665-355	5315-00-012-0123	148	9
80205	MS24665-355	5315-00-012-0123	149	13
80205	MS24665-355	5315-00-012-0123	154	12
80205	MS24665-355	5315-00-012-0123	225A	20
80205	MS24665-355	5315-00-012-0123	252E	6
80205	MS24665-513	5315-00-239-8032	148	1
80205	MS24665-513	5315-00-239-8032	149	17
80205	MS24665-628	5315-00-846-0126	150	8
80205	MS24665-628	5315-00-846-0126	263	15
96906	MS24665-640	5315-00-243-1169	150	19
80205	MS24667-21	5305-00-764-2970	167K	8
80205	MS24667-21	5305-00-764-2970	170A	13
80205	MS24667-21	5305-00-764-2970	200B	4
80205	MS24667-32	5305-00-968-3513	201M	11
80205	MS24667-32	5305-00-968-3513	202B	14
80205	MS24667-33	5305-00-993-1611	204A	41
80205	MS24667-34	5305-00-968-3515	201P	2
80205	MS24667-35	5305-00-968-3514	201M	16
80205	MS24667-52	5305-00-050-9215	167T	47
80205	MS24667-52	5305-00-050-9215	169J	45
96906	MS24667-52Z	5305-01-393-7801	265	10
96906	MS24667-53	5305-00-081-6729	189Q	5
96906	MS24667-54	5305-00-081-6730	207B	4
96906	MS24667-55	5305-00-630-3103	196G	29
96906	MS24667-58	5305-01-205-9158	207B	2
96906	MS24667-77	5305-00-052-2232	158	18
96906	MS24667-77	5305-00-052-2232	207A	14
96906	MS24667-80	5305-01-261-9483	207B	34
80205	MS24694-S98	5305-00-043-2682	201B	22

CAGE	PART NUMBER	STOCK NUMBER	FIG.	ITEM
96906	MS25036-106	5940-00-283-5280	249A	20
81343	MS25036-112	5940-00-143-4794	69	6
96906	MS25036-114	5940-00-113-9826	78	11
81343	MS25036-133	5940-00-115-5006	49	2
81343	MS25036-133	5940-00-115-5006	66	14
81343	MS25036-133	5940-00-115-5006	66	20
81343	MS25036-133	5940-00-115-5006	66	25
96906	MS25036-158	5940-00-682-2445	249B	15
96906	MS25043-22DA	5935-01-176-1708	70	12
96906	MS25043-22DA	5935-01-176-1708	200G	10
96906	MS25231-313	6240-00-155-8714	54	2
96906	MS27040-13	5310-00-982-4939	255	21
96906	MS27130-S25	5310-00-990-1361	266	5
96906	MS27130-S26	5310-00-269-3466	212	13
96906	MS27130-S27	5310-01-164-4693	266	6
96906	MS27130-S43	5310-00-080-2411	266	13
96906	MS27142-2	5935-00-462-6603	76	9
96906	MS27142-2	5935-00-462-6603	77	11
96906	MS27142-2	5935-00-462-6603	78	13
96906	MS27142-3	5935-00-115-2306	75	3
96906	MS27144-1	5935-00-167-7775	71	8
96906	MS27144-1	5935-00-167-7775	76	2
96906	MS27144-1	5935-00-167-7775	77	5
96906	MS27144-1	5935-00-167-7775	78	9
96906	MS27144-2	5935-00-115-2307	75	5
96906	MS27144-3	5935-00-184-6707	71	10
96906	MS27144-3	5935-00-184-6707	76	14
96906	MS27147-1	5935-00-900-6281	225F	2
96906	MS27147-1	5935-00-900-6281	249A	15
96906	MS27147-1	5935-00-900-6281	252H	9
96906	MS27183-10	5310-00-809-4058	12	15
96906	MS27183-10	5310-00-809-4058	25	2
96906	MS27183-10	5310-00-809-4058	28	22
96906	MS27183-10	5310-00-809-4058	31	4
96906	MS27183-10	5310-00-809-4058	33	19
96906	MS27183-10	5310-00-809-4058	35	13
96906	MS27183-10	5310-00-809-4058	54	6
96906	MS27183-10	5310-00-809-4058	55	2
96906	MS27183-10	5310-00-809-4058	56	9
96906	MS27183-10	5310-00-809-4058	59	15
96906	MS27183-10	5310-00-809-4058	66	4
96906	MS27183-10	5310-00-809-4058	67	10
96906	MS27183-10	5310-00-809-4058	79	30
96906	MS27183-10	5310-00-809-4058	112	15
96906	MS27183-10	5310-00-809-4058	118	15

CAGE	PART NUMBER	STOCK NUMBER	FIG.	ITEM
96906	MS27183-10	5310-00-809-4058	123	5
96906	MS27183-10	5310-00-809-4058	133	12
96906	MS27183-10	5310-00-809-4058	139	14
96906	MS27183-10	5310-00-809-4058	140	6
96906	MS27183-10	5310-00-809-4058	156	22
96906	MS27183-10	5310-00-809-4058	157	8
96906	MS27183-10	5310-00-809-4058	161	12
96906	MS27183-10	5310-00-809-4058	162	14
96906	MS27183-10	5310-00-809-4058	162	23
96906	MS27183-10	5310-00-809-4058	164	2
96906	MS27183-10	5310-00-809-4058	205	29
96906	MS27183-10	5310-00-809-4058	212	41
96906	MS27183-10	5310-00-809-4058	213	28
96906	MS27183-10	5310-00-809-4058	225	3
96906	MS27183-10	5310-00-809-4058	228	46
96906	MS27183-10	5310-00-809-4058	237	27
96906	MS27183-10	5310-00-809-4058	249	32
96906	MS27183-10	5310-00-809-4058	127A	16
96906	MS27183-10	5310-00-809-4058	164A	2
96906	MS27183-10	5310-00-809-4058	166A	49
96906	MS27183-10	5310-00-809-4058	167B	49
96906	MS27183-10	5310-00-809-4058	200G	12
96906	MS27183-10	5310-00-809-4058	204A	17
96906	MS27183-10	5310-00-809-4058	205A	27
96906	MS27183-10	5310-00-809-4058	207A	5
96906	MS27183-10	5310-00-809-4058	213A	2
96906	MS27183-10	5310-00-809-4058	220A	5
96906	MS27183-10	5310-00-809-4058	227D	12
96906	MS27183-10	5310-00-809-4058	228A	45
96906	MS27183-11	5310-00-809-3078	11	29
96906	MS27183-11	5310-00-809-3078	68	11
96906	MS27183-11	5310-00-809-3078	161	2
96906	MS27183-11	5310-00-809-3078	164	4
96906	MS27183-11	5310-00-809-3078	208	16
96906	MS27183-11	5310-00-809-3078	208	29
96906	MS27183-11	5310-00-809-3078	164A	4
96906	MS27183-11	5310-00-809-3078	204A	28
96906	MS27183-11	5310-00-809-3078	208A	18
96906	MS27183-11	5310-00-809-3078	266I	12
96906	MS27183-12	5310-00-081-4219	14	2
96906	MS27183-12	5310-00-081-4219	70	2
96906	MS27183-12	5310-00-081-4219	81	19
96906	MS27183-12	5310-00-081-4219	113	37
96906	MS27183-12	5310-00-081-4219	119	37
96906	MS27183-12	5310-00-081-4219	122	8

CROSS REFERENCE INDEXES
PART NUMBER

CAGE	PART NUMBER	STOCK NUMBER	FIG.	ITEM
96906	MS27183-12	5310-00-081-4219	126	24
96906	MS27183-12	5310-00-081-4219	127	13
96906	MS27183-12	5310-00-081-4219	146	4
96906	MS27183-12	5310-00-081-4219	147	2
96906	MS27183-12	5310-00-081-4219	157	18
96906	MS27183-12	5310-00-081-4219	158	2
96906	MS27183-12	5310-00-081-4219	158	8
96906	MS27183-12	5310-00-081-4219	163	7
96906	MS27183-12	5310-00-081-4219	164	14
96906	MS27183-12	5310-00-081-4219	212	30
96906	MS27183-12	5310-00-081-4219	217	5
96906	MS27183-12	5310-00-081-4219	230	1
96906	MS27183-12	5310-00-081-4219	230	10
96906	MS27183-12	5310-00-081-4219	233	24
96906	MS27183-12	5310-00-081-4219	246	15
96906	MS27183-12	5310-00-081-4219	163A	7
96906	MS27183-12	5310-00-081-4219	166A	46
96906	MS27183-12	5310-00-081-4219	167B	46
96906	MS27183-12	5310-00-081-4219	167H	29
96906	MS27183-12	5310-00-081-4219	167I	16
96906	MS27183-12	5310-00-081-4219	189E	13
96906	MS27183-12	5310-00-081-4219	196B	8
96906	MS27183-12	5310-00-081-4219	196D	33
96906	MS27183-12	5310-00-081-4219	202B	22
96906	MS27183-12	5310-00-081-4219	204B	16
96906	MS27183-12	5310-00-081-4219	210A	14
96906	MS27183-12	5310-00-081-4219	227D	19
96906	MS27183-12	5310-00-081-4219	227D	31
96906	MS27183-12	5310-00-081-4219	230A	1
96906	MS27183-12	5310-00-081-4219	230A	10
96906	MS27183-12	5310-00-081-4219	230B	21
96906	MS27183-12	5310-00-081-4219	249B	23
96906	MS27183-12	5310-00-081-4219	249F	6
96906	MS27183-12	5310-00-081-4219	265F	2
96906	MS27183-12	5310-00-081-4219	266J	24
96906	MS27183-12	5310-00-081-4219	266L	5
96906	MS27183-12	5310-00-081-4219	266N	14
96906	MS27183-12	5310-00-081-4219	44A	14
96906	MS27183-13	5310-00-087-7493	57	2
96906	MS27183-13	5310-00-087-7493	121	10
96906	MS27183-13	5310-00-087-7493	163	26
96906	MS27183-13	5310-00-087-7493	164	16
96906	MS27183-13	5310-00-087-7493	202D	7
96906	MS27183-13	5310-00-087-7493	207A	29
96906	MS27183-14	5310-00-080-6004	2	3

CROSS REFERENCE INDEXES
PART NUMBER

CAGE	PART NUMBER	STOCK NUMBER	FIG.	ITEM
96906	MS27183-14	5310-00-080-6004	9	10
96906	MS27183-14	5310-00-080-6004	25	51
96906	MS27183-14	5310-00-080-6004	35	7
96906	MS27183-14	5310-00-080-6004	39	7
96906	MS27183-14	5310-00-080-6004	45	14
96906	MS27183-14	5310-00-080-6004	58	2
96906	MS27183-14	5310-00-080-6004	72	6
96906	MS27183-14	5310-00-080-6004	87	9
96906	MS27183-14	5310-00-080-6004	102	23
96906	MS27183-14	5310-00-080-6004	113	14
96906	MS27183-14	5310-00-080-6004	119	14
96906	MS27183-14	5310-00-080-6004	123	18
96906	MS27183-14	5310-00-080-6004	128	6
96906	MS27183-14	5310-00-080-6004	137	9
96906	MS27183-14	5310-00-080-6004	146	1
96906	MS27183-14	5310-00-080-6004	147	4
96906	MS27183-14	5310-00-080-6004	161	20
96906	MS27183-14	5310-00-080-6004	162	19
96906	MS27183-14	5310-00-080-6004	163	10
96906	MS27183-14	5310-00-080-6004	208	26
96906	MS27183-14	5310-00-080-6004	230	17
96906	MS27183-14	5310-00-080-6004	163A	11
96906	MS27183-14	5310-00-080-6004	166A	25
96906	MS27183-14	5310-00-080-6004	167B	25
96906	MS27183-14	5310-00-080-6004	167R	2
96906	MS27183-14	5310-00-080-6004	196B	2
96906	MS27183-14	5310-00-080-6004	196C	11
96906	MS27183-14	5310-00-080-6004	196D	2
96906	MS27183-14	5310-00-080-6004	201C	13
96906	MS27183-14	5310-00-080-6004	207A	35
96906	MS27183-14	5310-00-080-6004	208A	29
96906	MS27183-14	5310-00-080-6004	230A	17
96906	MS27183-14	5310-00-080-6004	230B	5
96906	MS27183-14	5310-00-080-6004	265B	14
96906	MS27183-14	5310-00-080-6004	265C	7
96906	MS27183-14	5310-00-080-6004	265D	3
96906	MS27183-14	5310-00-080-6004	265E	3
96906	MS27183-14	5310-00-080-6004	266H	7
96906	MS27183-14	5310-00-080-6004	266J	3
96906	MS27183-14	5310-00-080-6004	266J	19
96906	MS27183-14	5310-00-080-6004	266K	2
96906	MS27183-14	5310-00-080-6004	266L	2
96906	MS27183-14	5310-00-080-6004	266N	17
96906	MS27183-14	5310-00-080-6004	39A	12
96906	MS27183-14	5310-00-080-6004	44A	19

CAGE	PART NUMBER	STOCK NUMBER	FIG.	ITEM
96906	MS27183-15	5310-00-809-4061	1	3
96906	MS27183-15	5310-00-809-4061	114	14
96906	MS27183-15	5310-00-809-4061	120	14
96906	MS27183-15	5310-00-809-4061	134	21
96906	MS27183-15	5310-00-809-4061	201C	7
96906	MS27183-16	5310-00-809-4085	25	41
96906	MS27183-16	5310-00-809-4085	25	50
96906	MS27183-16	5310-00-809-4085	45	2
96906	MS27183-16	5310-00-809-4085	133	16
96906	MS27183-16	5310-00-809-4085	135	2
96906	MS27183-16	5310-00-809-4085	153	6
96906	MS27183-16	5310-00-809-4085	162	7
96906	MS27183-16	5310-00-809-4085	165	18
96906	MS27183-16	5310-00-809-4085	207	10
96906	MS27183-16	5310-00-809-4085	207	25
96906	MS27183-16	5310-00-809-4085	220	9
96906	MS27183-16	5310-00-809-4085	221	5
96906	MS27183-16	5310-00-809-4085	256	7
96906	MS27183-16	5310-00-809-4085	261	19
96906	MS27183-16	5310-00-809-4085	201L	32
96906	MS27183-18	5310-00-809-5998	42	2
96906	MS27183-18	5310-00-809-5998	113	17
96906	MS27183-18	5310-00-809-5998	119	17
96906	MS27183-18	5310-00-809-5998	130	6
96906	MS27183-18	5310-00-809-5998	246	17
96906	MS27183-18	5310-00-809-5998	273	2
96906	MS27183-19	5310-00-809-3079	246	24
96906	MS27183-20	5310-00-068-5285	101	10
96906	MS27183-20	5310-00-068-5285	130	4
96906	MS27183-20	5310-00-068-5285	141	9
96906	MS27183-20	5310-00-068-5285	101A	11
96906	MS27183-20	5310-00-068-5285	141A	19
96906	MS27183-21	5310-00-823-8803	152	5
96906	MS27183-21	5310-00-823-8803	158	41
96906	MS27183-23	5310-00-809-8533	140	14
96906	MS27183-41	5310-00-765-3197	266I	11
96906	MS27183-42	5310-00-014-5850	61	5
96906	MS27183-42	5310-00-014-5850	81	15
96906	MS27183-42	5310-00-014-5850	133	20
96906	MS27183-42	5310-00-014-5850	158	33
96906	MS27183-42	5310-00-014-5850	158	57
96906	MS27183-42	5310-00-014-5850	160	33
96906	MS27183-42	5310-00-014-5850	161	30
96906	MS27183-42	5310-00-014-5850	163	3
96906	MS27183-42	5310-00-014-5850	164	8

CAGE	PART NUMBER	STOCK NUMBER	FIG.	ITEM
96906	MS27183-42	5310-00-014-5850	214	15
96906	MS27183-42	5310-00-014-5850	232	35
96906	MS27183-42	5310-00-014-5850	233	16
96906	MS27183-42	5310-00-014-5850	248	14
96906	MS27183-42	5310-00-014-5850	163A	33
96906	MS27183-42	5310-00-014-5850	164A	11
96906	MS27183-42	5310-00-014-5850	200E	5
96906	MS27183-42	5310-00-014-5850	201L	7
96906	MS27183-42	5310-00-014-5850	201O	5
96906	MS27183-42	5310-00-014-5850	207B	46
96906	MS27183-5	5310-00-983-8483	200G	9
96906	MS27183-57	5310-01-280-5796	72	17
96906	MS27183-57	5310-01-280-5796	74	8
96906	MS27183-57	5310-01-280-5796	256	15
96906	MS27183-7	5310-00-809-8544	17	5
96906	MS27183-8	5310-00-809-8546	51	11
96906	MS27183-8	5310-00-809-8546	274B	8
96906	MS27183-8	5310-00-809-8546	51A	11
96906	MS27183-9	5310-00-823-8804	12	20
96906	MS27183-9	5310-00-823-8804	30	3
96906	MS27183-9	5310-00-823-8804	33	29
96906	MS27183-9	5310-00-823-8804	150A	7
96906	MS27212-5-2	5940-01-361-9107	236	23
81343	MS28775-012	5331-00-584-0265	225J	6
96906	MS28775-110	5331-00-585-6663	33	8
81343	MS28775-223	5331-00-171-6649	128A	7
81343	MS28778-24	5331-00-819-5111	266H	5
81343	MS28778-24	5331-00-819-5111	266I	4
81343	MS28778-24	5331-00-819-5111	266J	14
81343	MS28778-24	5331-00-819-5111	266L	8
81343	MS28778-24	5331-00-819-5111	266N	9
81343	MS28778-4	5331-00-805-2966	117F	4
96906	MS3217-2075	5325-01-388-2363	253	11
96906	MS3367-1-0	5975-00-984-6582	126	2
96906	MS3367-1-0	5975-00-984-6582	225F	5
96906	MS3367-1-0	5975-00-984-6582	249B	1
96906	MS3367-1-0	5975-00-984-6582	252D	1
96906	MS3367-1-0	5975-00-984-6582	252H	2
96906	MS3367-1-0	5975-00-984-6582	267A	6
81343	MS3367-1-9	5975-00-074-2072	25	5
81343	MS3367-1-9	5975-00-074-2072	84	10
96906	MS3367-2	9905-00-027-4577	237	22
96906	MS3367-2-0	5975-00-899-4606	138C	9
96906	MS3367-2-0	5975-00-899-4606	266M	14
81343	MS3367-2-9	5975-00-156-3253	267	11

CAGE	PART NUMBER	STOCK NUMBER	FIG.	ITEM
96906	MS3367-3-0	5975-00-985-6630	12	18
96906	MS3367-3-0	5975-00-985-6630	80	17
96906	MS3367-3-0	5975-00-985-6630	81	7
96906	MS3367-3-0	5975-00-985-6630	117C	2
96906	MS3367-3-0	5975-00-985-6630	12A	19
96906	MS3367-3-0	5975-00-985-6630	40A	2
96906	MS3367-3-0	5975-00-985-6630	99A	7
81343	MS3367-3-9	5975-00-451-5001	12	21
81343	MS3367-3-9	5975-00-451-5001	72	19
96906	MS3367-4-0	5975-00-903-2284	84	8
81343	MS3367-5-9	5975-00-111-3208	255	7
81343	MS3367-6-0	5975-01-048-2922	117A	1
81343	MS3367-7	5975-01-205-5379	233	33
81343	MS3367-7	5975-01-205-5379	258	3
81343	MS3367-7-0	5975-01-034-5871	84	9
81343	MS3367-7-0	5975-01-034-5871	232	7
81343	MS3367-7-0	5975-01-034-5871	237A	2
96906	MS3367-7-0	5975-01-034-5871	249A	27
81343	MS3367-7-0	5975-01-034-5871	249C	10
96906	MS3367-7-0	5975-01-034-5871	266F	2
81343	MS3367-7-9	5975-00-570-9598	30	13
96906	MS3450W16S-1S	5935-01-110-7065	77	10
96906	MS3456W16S-1P	5935-01-050-6586	75	2
80205	MS35190-269	5305-00-957-6272	201G	24
80205	MS35190-272	5305-00-088-8332	248	2
80205	MS35190-289	5305-00-958-5246	79	27
80205	MS35190-289	5305-00-958-5246	235	19
80205	MS35190-289	5305-00-958-5246	235A	18
80205	MS35190-290	5305-00-954-3937	12	5
80205	MS35190-290	5305-00-954-3937	162	9
80205	MS35190-290	5305-00-954-3937	12A	2
80205	MS35190-290	5305-00-954-3937	201K	41
80205	MS35190-290	5305-00-954-3937	266O	3
80205	MS35190-305	5305-00-958-5469	212	45
80205	MS35190-306	5305-00-958-5253	210A	29
80205	MS35190-307	5305-00-958-5254	210A	24
96906	MS35191-272	5305-00-984-7363	237	23
80205	MS35206-217	5305-00-889-2999	79	26
80205	MS35206-230	5305-00-889-3000	204A	42
80205	MS35206-232	5305-00-984-4992	74	1
80205	MS35206-232	5305-00-984-4992	266O	10
80205	MS35206-232	5305-00-984-4992	266P	8
96906	MS35206-234	5305-00-984-6221	229	5
96906	MS35206-242	5305-00-889-3002	50	51
80205	MS35206-243	5305-00-984-6191	52	7

CAGE	PART NUMBER	STOCK NUMBER	FIG.	ITEM
80205	MS35206-243	5305-00-984-6191	238	11
80205	MS35206-244	5305-00-984-6192	69	9
80205	MS35206-245	5305-00-984-6193	17	6
80205	MS35206-245	5305-00-984-6193	263	5
80205	MS35206-245	5305-00-984-6193	166A	36
80205	MS35206-245	5305-00-984-6193	167B	36
80205	MS35206-246	5305-00-984-6194	196B	11
80205	MS35206-247	5305-00-984-6195	53	4
80205	MS35206-247	5305-00-984-6195	166B	21
80205	MS35206-247	5305-00-984-6195	196C	5
80205	MS35206-247	5305-00-984-6195	274B	1
80205	MS35206-248	5305-00-984-6196	166A	10
80205	MS35206-248	5305-00-984-6196	167B	10
80205	MS35206-249	5305-00-984-6197	56	12
80205	MS35206-249	5305-00-984-6197	201F	4
96906	MS35206-249	5305-00-984-6197	249B	9
96906	MS35206-263	5305-00-984-6210	63	1
96906	MS35206-263	5305-00-984-6210	189P	13
96906	MS35206-263	5305-00-984-6210	249B	10
80205	MS35206-264	5305-00-984-6211	61	6
80205	MS35206-265	5305-00-984-6212	25	26
80205	MS35206-265	5305-00-984-6212	61	6
80205	MS35206-265	5305-00-984-6212	81	1
80205	MS35206-265	5305-00-984-6212	160	3
80205	MS35206-265	5305-00-984-6212	262	6
80205	MS35206-265	5305-00-984-6212	166B	5
80205	MS35206-265	5305-00-984-6212	200E	14
80205	MS35206-265	5305-00-984-6212	213A	12
80205	MS35206-265	5305-00-984-6212	266J	9
80205	MS35206-265	5305-00-984-6212	266K	8
80205	MS35206-265	5305-00-984-6212	266M	5
80205	MS35206-266	5305-00-984-6213	161	31
80205	MS35206-266	5305-00-984-6213	204B	9
80205	MS35206-267	5305-00-984-6214	166A	16
80205	MS35206-267	5305-00-984-6214	196G	14
96906	MS35206-275	5305-00-984-7365	201K	48
96906	MS35206-280	5305-00-988-1724	231	3
80205	MS35206-281	5305-00-988-1725	54	9
80205	MS35206-281	5305-00-988-1725	55	1
80205	MS35206-281	5305-00-988-1725	81	24
80205	MS35206-281	5305-00-988-1725	226	15
80205	MS35206-281	5305-00-988-1725	255	5
80205	MS35206-281	5305-00-988-1725	166A	14
80205	MS35206-281	5305-00-988-1725	167B	14
80205	MS35206-281	5305-00-988-1725	227C	14

CAGE	PART NUMBER	STOCK NUMBER	FIG.	ITEM
80205	MS35206-281	5305-00-988-1725	227C	26
80205	MS35206-281	5305-00-988-1725	227D	28
80205	MS35206-281	5305-00-988-1725	287A	11
80205	MS35206-283	5305-00-988-1727	166B	8
80205	MS35206-295	5305-00-984-5675	196D	34
96906	MS35206-345	5305-00-482-6825	166A	7
96906	MS35206-345	5305-00-482-6825	223A	20
80205	MS35207-261	5305-00-990-6444	50	30
80205	MS35207-261	5305-00-990-6444	50	47
80205	MS35207-263	5305-00-989-7434	25	33
80205	MS35207-263	5305-00-989-7434	50	43
80205	MS35207-263	5305-00-989-7434	213	11
80205	MS35207-263	5305-00-989-7434	227	5
80205	MS35207-263	5305-00-989-7434	236	8
80205	MS35207-263	5305-00-989-7434	237	11
80205	MS35207-263	5305-00-989-7434	250	6
80205	MS35207-264	5305-00-989-7435	166	9
80205	MS35207-264	5305-00-989-7435	204A	18
80205	MS35207-265	5305-00-993-1848	74	12
80205	MS35207-265	5305-00-993-1848	237	20
80205	MS35207-270	5305-00-995-3440	51	19
80205	MS35207-270	5305-00-995-3440	51A	22
80205	MS35215-53	5305-00-206-2508	66	30
80205	MS35265-43	5305-00-614-3423	51	13
80205	MS35265-43	5305-00-614-3423	51A	16
80205	MS35307-355	5305-00-478-0273	69	2
80205	MS35307-357	5305-00-655-9711	69	12
80205	MS35308-384	5305-00-689-7472	117	25
80205	MS35333-38	5310-00-559-0070	22	6
80205	MS35333-39	5310-00-576-5752	233	18
80205	MS35333-40	5310-00-550-1130	65	7
80205	MS35333-40	5310-00-550-1130	162	13
80205	MS35333-40	5310-00-550-1130	205	30
80205	MS35333-40	5310-00-550-1130	228	16
80205	MS35333-40	5310-00-550-1130	235	7
80205	MS35333-40	5310-00-550-1130	205A	28
80205	MS35333-40	5310-00-550-1130	228A	16
80205	MS35333-40	5310-00-550-1130	235A	7
80205	MS35333-40	5310-00-550-1130	287A	10
96906	MS35333-43	5310-00-685-3228	228	13
96906	MS35333-43	5310-00-685-3228	228A	13
80205	MS35333-44	5310-00-194-1483	51	16
80205	MS35333-44	5310-00-194-1483	150A	19
80205	MS35333-44	5310-00-194-1483	51A	19
80205	MS35333-44	5310-00-194-1483	51A	25

CAGE	PART NUMBER	STOCK NUMBER	FIG.	ITEM
80205	MS35333-76	5310-00-180-0277	236	12
96906	MS35335-33	5310-00-209-0786	142	8
80205	MS35338-100	5310-00-261-8278	66	31
80205	MS35338-103	5310-00-184-8971	66	29
96906	MS35338-141	5310-00-984-7042	69	3
80205	MS35338-145	5310-00-937-0453	12A	22
80205	MS35338-145	5310-00-937-0453	135A	3
96906	MS35338-26	5310-00-012-0214	108	14
96906	MS35338-26	5310-00-012-0214	138A	3
96906	MS35338-26	5310-00-012-0214	138B	13
80205	MS35338-40	5310-00-543-2410	207A	13
80205	MS35338-41	5310-00-045-4007	233	30
80205	MS35338-41	5310-00-045-4007	200G	8
80205	MS35338-42	5310-00-045-3299	51	14
80205	MS35338-42	5310-00-045-3299	53	2
80205	MS35338-42	5310-00-045-3299	169	28
80205	MS35338-42	5310-00-045-3299	249B	4
80205	MS35338-42	5310-00-045-3299	51A	17
80205	MS35338-43	5310-00-045-3296	228	41
80205	MS35338-43	5310-00-045-3296	266	3
80205	MS35338-43	5310-00-045-3296	189G	40
80205	MS35338-43	5310-00-045-3296	204A	12
80205	MS35338-43	5310-00-045-3296	205C	11
80205	MS35338-43	5310-00-045-3296	249B	11
80205	MS35338-43	5310-00-045-3296	266J	8
80205	MS35338-43	5310-00-045-3296	266K	7
80205	MS35338-43	5310-00-045-3296	266M	4
80205	MS35338-43	5310-00-045-3296	274B	5
80205	MS35338-43	5310-00-045-3296	70A	9
80205	MS35338-44	5310-00-582-5965	35	12
80205	MS35338-44	5310-00-582-5965	38	5
96906	MS35338-44	5310-00-582-5965	54	5
80205	MS35338-44	5310-00-582-5965	65	3
80205	MS35338-44	5310-00-582-5965	123	12
80205	MS35338-44	5310-00-582-5965	163	18
80205	MS35338-44	5310-00-582-5965	209	12
80205	MS35338-44	5310-00-582-5965	210	3
80205	MS35338-44	5310-00-582-5965	228	37
80205	MS35338-44	5310-00-582-5965	255	2
80205	MS35338-44	5310-00-582-5965	126A	9
80205	MS35338-44	5310-00-582-5965	163A	19
80205	MS35338-44	5310-00-582-5965	167G	15
80205	MS35338-44	5310-00-582-5965	167H	14
80205	MS35338-44	5310-00-582-5965	167I	7
80205	MS35338-44	5310-00-582-5965	167T	11

CAGE	PART NUMBER	STOCK NUMBER	FIG.	ITEM
80205	MS35338-44	5310-00-582-5965	167T	35
80205	MS35338-44	5310-00-582-5965	167U	29
80205	MS35338-44	5310-00-582-5965	169J	11
80205	MS35338-44	5310-00-582-5965	169J	33
80205	MS35338-44	5310-00-582-5965	170A	23
80205	MS35338-44	5310-00-582-5965	189B	27
80205	MS35338-44	5310-00-582-5965	189E	16
80205	MS35338-44	5310-00-582-5965	189J	22
80205	MS35338-44	5310-00-582-5965	189N	13
80205	MS35338-44	5310-00-582-5965	189O	20
80205	MS35338-44	5310-00-582-5965	200F	12
80205	MS35338-44	5310-00-582-5965	201G	2
80205	MS35338-44	5310-00-582-5965	201I	2
80205	MS35338-44	5310-00-582-5965	201M	13
80205	MS35338-44	5310-00-582-5965	202A	4
80205	MS35338-44	5310-00-582-5965	202B	17
80205	MS35338-44	5310-00-582-5965	204A	10
80205	MS35338-44	5310-00-582-5965	205B	5
80205	MS35338-44	5310-00-582-5965	209C	2
80205	MS35338-44	5310-00-582-5965	213A	26
80205	MS35338-44	5310-00-582-5965	226A	11
80205	MS35338-44	5310-00-582-5965	228A	37
80205	MS35338-44	5310-00-582-5965	266M	11
80205	MS35338-44	5310-00-582-5965	266N	20
80205	MS35338-44	5310-00-582-5965	266O	4
80205	MS35338-44	5310-00-582-5965	276G	8
80205	MS35338-44	5310-00-582-5965	287B	3
80205	MS35338-44	5310-00-582-5965	288A	4
80205	MS35338-44	5310-00-582-5965	38A	15
80205	MS35338-44	5310-00-582-5965	70A	5
80205	MS35338-45	5310-00-407-9566	31	20
80205	MS35338-45	5310-00-407-9566	35	15
80205	MS35338-45	5310-00-407-9566	70	10
80205	MS35338-45	5310-00-407-9566	204	5
80205	MS35338-45	5310-00-407-9566	205	14
80205	MS35338-45	5310-00-407-9566	212	31
96906	MS35338-45	5310-00-407-9566	215	10
80205	MS35338-45	5310-00-407-9566	230	2
80205	MS35338-45	5310-00-407-9566	230	11
80205	MS35338-45	5310-00-407-9566	246	14
80205	MS35338-45	5310-00-407-9566	247	9
80205	MS35338-45	5310-00-407-9566	167C	16
80205	MS35338-45	5310-00-407-9566	167G	11
80205	MS35338-45	5310-00-407-9566	167H	28
80205	MS35338-45	5310-00-407-9566	167T	3

CAGE	PART NUMBER	STOCK NUMBER	FIG.	ITEM
80205	MS35338-45	5310-00-407-9566	167T	13
80205	MS35338-45	5310-00-407-9566	167U	14
80205	MS35338-45	5310-00-407-9566	167V	3
80205	MS35338-45	5310-00-407-9566	169J	3
80205	MS35338-45	5310-00-407-9566	169J	13
80205	MS35338-45	5310-00-407-9566	189E	7
80205	MS35338-45	5310-00-407-9566	189M	13
80205	MS35338-45	5310-00-407-9566	189N	6
80205	MS35338-45	5310-00-407-9566	195D	14
80205	MS35338-45	5310-00-407-9566	195E	3
80205	MS35338-45	5310-00-407-9566	195E	7
80205	MS35338-45	5310-00-407-9566	195F	13
80205	MS35338-45	5310-00-407-9566	201L	29
80205	MS35338-45	5310-00-407-9566	201O	8
80205	MS35338-45	5310-00-407-9566	202D	6
80205	MS35338-45	5310-00-407-9566	205A	11
80205	MS35338-45	5310-00-407-9566	207B	9
80205	MS35338-45	5310-00-407-9566	208A	5
80205	MS35338-45	5310-00-407-9566	210A	15
80205	MS35338-45	5310-00-407-9566	217A	8
80205	MS35338-45	5310-00-407-9566	217B	5
80205	MS35338-45	5310-00-407-9566	230A	2
80205	MS35338-45	5310-00-407-9566	230A	11
80205	MS35338-45	5310-00-407-9566	230B	15
80205	MS35338-45	5310-00-407-9566	249B	22
80205	MS35338-45	5310-00-407-9566	249E	8
80205	MS35338-45	5310-00-407-9566	266J	23
80205	MS35338-45	5310-00-407-9566	266L	4
80205	MS35338-45	5310-00-407-9566	266M	16
80205	MS35338-45	5310-00-407-9566	266N	13
80205	MS35338-45	5310-00-407-9566	266P	3
80205	MS35338-45	5310-00-407-9566	44A	13
80205	MS35338-46	5310-00-004-5033	1	4
80205	MS35338-46	5310-00-004-5033	2	5
80205	MS35338-46	5310-00-004-5033	25	47
80205	MS35338-46	5310-00-004-5033	28	23
80205	MS35338-46	5310-00-004-5033	35	27
80205	MS35338-46	5310-00-004-5033	43	6
80205	MS35338-46	5310-00-004-5033	44	13
80205	MS35338-46	5310-00-004-5033	48	3
80205	MS35338-46	5310-00-004-5033	72	16
80205	MS35338-46	5310-00-004-5033	81	25
80205	MS35338-46	5310-00-004-5033	100	18
80205	MS35338-46	5310-00-004-5033	129	5
80205	MS35338-46	5310-00-004-5033	133	2

CAGE	PART NUMBER	STOCK NUMBER	FIG.	ITEM
80205	MS35338-46	5310-00-004-5033	161	19
80205	MS35338-46	5310-00-004-5033	163	36
80205	MS35338-46	5310-00-004-5033	164	21
80205	MS35338-46	5310-00-004-5033	234	2
80205	MS35338-46	5310-00-004-5033	246	11
80205	MS35338-46	5310-00-004-5033	264	5
80205	MS35338-46	5310-00-004-5033	273	6
80205	MS35338-46	5310-00-004-5033	100A	22
80205	MS35338-46	5310-00-004-5033	103A	9
80205	MS35338-46	5310-00-004-5033	128A	10
80205	MS35338-46	5310-00-004-5033	167T	48
80205	MS35338-46	5310-00-004-5033	167U	8
80205	MS35338-46	5310-00-004-5033	169J	51
80205	MS35338-46	5310-00-004-5033	189A	14
80205	MS35338-46	5310-00-004-5033	189B	8
80205	MS35338-46	5310-00-004-5033	189C	4
80205	MS35338-46	5310-00-004-5033	189D	13
80205	MS35338-46	5310-00-004-5033	189H	4
80205	MS35338-46	5310-00-004-5033	189J	37
80205	MS35338-46	5310-00-004-5033	189N	11
80205	MS35338-46	5310-00-004-5033	195D	10
80205	MS35338-46	5310-00-004-5033	195F	9
80205	MS35338-46	5310-00-004-5033	195G	3
80205	MS35338-46	5310-00-004-5033	195I	5
80205	MS35338-46	5310-00-004-5033	195K	3
80205	MS35338-46	5310-00-004-5033	200H	15
80205	MS35338-46	5310-00-004-5033	201D	3
80205	MS35338-46	5310-00-004-5033	201J	13
80205	MS35338-46	5310-00-004-5033	202B	11
80205	MS35338-46	5310-00-004-5033	225A	10
80205	MS35338-46	5310-00-004-5033	266N	16
80205	MS35338-46	5310-00-004-5033	273A	12
80205	MS35338-46	5310-00-004-5033	38A	18
80205	MS35338-46	5310-00-004-5033	42A	16
80205	MS35338-46	5310-00-004-5033	42B	2
80205	MS35338-46	5310-00-004-5033	44A	18
80205	MS35338-46	5310-00-004-5033	45A	3
80205	MS35338-47	5310-00-209-0965	45	7
80205	MS35338-47	5310-00-209-0965	119	41
80205	MS35338-47	5310-00-209-0965	135	3
80205	MS35338-47	5310-00-209-0965	263	2
80205	MS35338-47	5310-00-209-0965	201C	16
80205	MS35338-47	5310-00-209-0965	221A	4
80205	MS35338-48	5310-00-584-5272	87	17
80205	MS35338-48	5310-00-584-5272	207	16

CAGE	PART NUMBER	STOCK NUMBER	FIG.	ITEM
80205	MS35338-48	5310-00-584-5272	207	28
80205	MS35338-48	5310-00-584-5272	246	19
80205	MS35338-48	5310-00-584-5272	116A	5
80205	MS35338-48	5310-00-584-5272	167F	3
80205	MS35338-48	5310-00-584-5272	167U	22
80205	MS35338-48	5310-00-584-5272	170A	17
80205	MS35338-48	5310-00-584-5272	201K	7
80205	MS35338-48	5310-00-584-5272	265D	5
80205	MS35338-48	5310-00-584-5272	42A	2
80205	MS35338-50	5310-00-820-6653	152	6
80205	MS35338-50	5310-00-820-6653	201H	2
80205	MS35338-65	5310-00-011-5093	110	13
96906	MS35338-67	5310-00-011-6121	67	6
96906	MS35338-67	5310-00-011-6121	101A	7
96906	MS35340-43	5310-00-721-7809	250	3
96906	MS35340-43	5310-00-721-7809	100A	26
96906	MS35340-47	5310-00-655-9370	261	18
96906	MS35340-48	5310-00-834-7606	261	13
96906	MS35421-1	6220-00-299-7425	61	2
96906	MS35421-2	6220-00-299-7426	61	2
96906	MS35436-16	5940-00-020-0072	73	12
96906	MS35489-11	5325-00-291-9366	233	35
96906	MS35489-110	5325-00-202-4005	75	8
96906	MS35489-17	5325-01-242-7083	233	11
96906	MS35489-23	5325-00-276-6343	81	22
96906	MS35489-31	5325-00-174-9336	264	9
96906	MS35489-41	5325-01-088-7468	228	19
96906	MS35489-41	5325-01-088-7468	228A	19
96906	MS35489-48	5325-00-174-9332	75	7
96906	MS35489-48	5325-00-174-9332	161	25
80205	MS35649-202	5310-00-934-9758	70	9
80205	MS35649-202	5310-00-934-9758	81	4
80205	MS35649-202	5310-00-934-9758	205	1
80205	MS35649-202	5310-00-934-9758	228	32
80205	MS35649-202	5310-00-934-9758	100A	25
96906	MS35649-202	5310-00-934-9758	189G	39
80205	MS35649-202	5310-00-934-9758	204A	5
80205	MS35649-202	5310-00-934-9758	204A	21
80205	MS35649-202	5310-00-934-9758	204B	20
80205	MS35649-202	5310-00-934-9758	205A	2
80205	MS35649-202	5310-00-934-9758	205C	10
80205	MS35649-202	5310-00-934-9758	205C	17
80205	MS35649-202	5310-00-934-9758	228A	32
80205	MS35649-202	5310-00-934-9758	70A	8
80205	MS35649-205B	5310-00-934-9764	61	4

CAGE	PART NUMBER	STOCK NUMBER	FIG.	ITEM
80205	MS35649-205B	5310-00-934-9764	133	19
80205	MS35649-2252	5310-00-997-1888	81	27
80205	MS35649-2252	5310-00-997-1888	249	22
80205	MS35649-2252	5310-00-997-1888	249	29
80205	MS35649-262	5310-00-934-9747	233	29
80205	MS35649-282	5310-00-934-9757	22	7
80205	MS35649-282	5310-00-934-9757	53	1
96906	MS35650-302	5310-00-934-9751	23	3
80205	MS35650-302	5310-00-934-9751	50	49
80205	MS35650-302	5310-00-934-9751	233	19
96906	MS35691-23	5310-00-926-5913	236	11
96906	MS35691-33	5310-00-834-8732	48	6
96906	MS35692-54	5310-00-850-7004	114	10
96906	MS35692-54	5310-00-850-7004	114	17
96906	MS35692-54	5310-00-850-7004	120	10
96906	MS35692-54	5310-00-850-7004	120	17
96906	MS35692-54	5310-00-850-7004	134	3
96906	MS35692-54	5310-00-850-7004	134	8
96906	MS35692-54	5310-00-850-7004	148	10
96906	MS35692-54	5310-00-850-7004	149	14
96906	MS35692-54	5310-00-850-7004	154	8
96906	MS35692-62	5310-00-850-6993	134	3
96906	MS35692-62	5310-00-850-6993	134	8
96906	MS35692-62	5310-00-850-6993	148	2
96906	MS35692-62	5310-00-850-6993	149	19
96906	MS35692-94	5310-00-849-6882	150	9
80205	MS35756-17	5315-00-012-4553	46	26
80205	MS35756-6	5315-00-616-5514	138B	7
96906	MS35764-861	5306-01-254-6356	135	4
81343	MS35769-9	5330-01-355-3686	11	24
96906	MS35810-4	5315-00-815-8840	121	4
96906	MS35810-4	5315-00-815-8840	123	17
96906	MS35810-4	5315-00-815-8840	123A	7
96906	MS35842-11	4730-00-908-3194	233	3
96906	MS35842-11	4730-00-908-3194	249A	2
96906	MS35842-11	4730-00-908-3194	249E	1
96906	MS39061-4	5930-00-226-6429	51	6
96906	MS45904-60	5310-00-080-9786	79	36
96906	MS45904-60	5310-00-080-9786	236	6
96906	MS45904-60	5310-00-080-9786	237	10
96906	MS45904-68	5310-00-889-2528	228	15
96906	MS45904-68	5310-00-889-2528	228A	15
96906	MS45904-68	5310-00-889-2528	266G	3
96906	MS49006-6	4730-00-045-9769	113	39
96906	MS49006-6	4730-00-045-9769	119	39

CAGE	PART NUMBER	STOCK NUMBER	FIG.	ITEM
96906	MS51113-1	5930-00-307-8856	51	20
96906	MS51113-1	5930-00-307-8856	51A	23
96906	MS51412-1	5310-01-303-4701	266O	8
96906	MS51412-1	5310-01-303-4701	266P	6
96906	MS51412-18	5310-01-253-1618	51	23
96906	MS51412-18	5310-01-253-1618	228	28
96906	MS51412-18	5310-01-253-1618	196B	13
96906	MS51412-18	5310-01-253-1618	196C	8
96906	MS51412-2	5310-01-234-9416	205	2
96906	MS51412-2	5310-01-234-9416	224	6
96906	MS51412-2	5310-01-234-9416	228	38
96906	MS51412-2	5310-01-234-9416	228	44
96906	MS51412-2	5310-01-234-9416	166B	6
96906	MS51412-2	5310-01-234-9416	200F	9
96906	MS51412-2	5310-01-234-9416	201J	6
96906	MS51412-2	5310-01-234-9416	204A	7
96906	MS51412-2	5310-01-234-9416	204B	5
96906	MS51412-2	5310-01-234-9416	205A	3
96906	MS51412-2	5310-01-234-9416	227D	16
96906	MS51412-2	5310-01-234-9416	228A	38
96906	MS51412-2	5310-01-234-9416	228A	43
96906	MS51412-2	5310-01-234-9416	266J	7
96906	MS51412-2	5310-01-234-9416	266K	6
96906	MS51412-2	5310-01-234-9416	266M	3
96906	MS51412-2	5310-01-234-9416	274A	1
96906	MS51412-2	5310-01-234-9416	274B	4
96906	MS51412-2	5310-01-234-9416	281C	3
96906	MS51412-2	5310-01-234-9416	70A	7
96906	MS51412-23	5310-01-333-0060	202B	18
96906	MS51412-23	5310-01-333-0060	266M	12
96906	MS51412-23	5310-01-333-0060	266N	19
96906	MS51412-23	5310-01-333-0060	70A	4
96906	MS51412-27	5310-01-385-7083	250	12
96906	MS51412-4	5310-01-103-6042	252D	2
96906	MS51412-5	5310-01-234-9415	79	23
96906	MS51412-7	5310-01-257-7590	253	17
96906	MS51415-9	5310-01-216-7390	48	5
96906	MS51470-03	5310-01-249-0899	250	1
96906	MS51471-01	5310-01-272-9981	113	41
96906	MS51471-01	5310-01-272-9981	113A	2
96906	MS51471-01	5310-01-272-9981	201G	20
96906	MS51480-05	5305-01-264-0923	200H	28
96906	MS51501A6	4730-00-577-8017	117E	6
96906	MS51523A6	4730-00-618-5381	117E	3
96906	MS51525A6	4730-00-491-9576	117F	3

CAGE	PART NUMBER	STOCK NUMBER	FIG.	ITEM
96906	MS51525-A6	4730-00-491-9576	44A	10
96906	MS51815-4P	4730-00-985-4804	299	16
96906	MS51844-63	4030-01-142-0456	196C	4
96906	MS51849-33	5305-00-227-1543	233	32
96906	MS51849-55	5305-00-115-9934	163	28
96906	MS51849-55	5305-00-115-9934	117D	5
96906	MS51849-55	5305-00-115-9934	163A	29
96906	MS51849-55	5305-00-115-9934	200F	13
96906	MS51849-64	5305-00-180-4966	236	15
96906	MS51849-74	5305-00-470-3321	70	11
96906	MS51849-74	5305-00-470-3321	163	1
96906	MS51849-74	5305-00-470-3321	164	10
96906	MS51849-74	5305-00-470-3321	201H	4
96906	MS51849-74	5305-00-470-3321	204B	6
96906	MS51849-74	5305-00-470-3321	267A	8
96906	MS51849-75	5305-01-006-2053	51	28
96906	MS51849-75	5305-01-006-2053	228	29
96906	MS51849-75	5305-01-006-2053	228	48
96906	MS51849-75	5305-01-006-2053	100A	19
96906	MS51849-75	5305-01-006-2053	200E	23
96906	MS51849-76	5305-00-240-0194	79	9
96906	MS51849-76	5305-00-240-0194	133	22
96906	MS51849-76	5305-00-240-0194	156	26
96906	MS51849-76	5305-00-240-0194	158	59
96906	MS51849-76	5305-00-240-0194	163	4
96906	MS51849-76	5305-00-240-0194	164	7
96906	MS51849-76	5305-00-240-0194	212	49
96906	MS51849-76	5305-00-240-0194	232	34
96906	MS51849-76	5305-00-240-0194	163A	5
96906	MS51849-76	5305-00-240-0194	164A	7
96906	MS51849-76	5305-00-240-0194	210A	28
96906	MS51849-76	5305-00-240-0194	228A	29
96906	MS51849-76	5305-00-240-0194	274B	6
96906	MS51849-77	5305-01-005-6715	167T	56
96906	MS51849-78	5305-00-240-6668	79	1
96906	MS51849-78	5305-00-240-6668	204A	13
96906	MS51849-78	5305-00-240-6668	228A	47
96906	MS51849-79	5305-00-240-6541	201J	5
96906	MS51849-95	5305-01-016-4344	263	18
96906	MS51849-96	5305-00-489-0743	72	22
96906	MS51849-96	5305-00-489-0743	79	39
96906	MS51849-98	5305-00-390-0524	80	2
96906	MS51849-99	5305-01-101-2011	207B	27
96906	MS51851-34	5305-01-076-3150	56	7
96906	MS51851-69	5305-01-207-9311	189P	3

CAGE	PART NUMBER	STOCK NUMBER	FIG.	ITEM
96906	MS51851-85	5305-00-191-3640	12	22
96906	MS51851-85	5305-00-191-3640	255	10
96906	MS51851-85	5305-00-191-3640	117B	5
96906	MS51851-85	5305-00-191-3640	117G	17
96906	MS51859-20	5310-01-313-3562	230	20
96906	MS51859-20	5310-01-313-3562	230A	20
96906	MS51859-20	5310-01-313-3562	230B	2
80205	MS51861-26	5305-00-432-4165	54	13
96906	MS51861-39	5305-00-432-7954	81	14
96906	MS51861-47	5305-00-432-4203	249G	9
96906	MS51861-48	5305-00-432-4204	158	36
80205	MS51861-49	5305-00-432-4205	165	9
80205	MS51861-49	5305-00-432-4205	166A	34
80205	MS51861-49	5305-00-432-4205	167B	34
80205	MS51861-49	5305-00-432-4205	167E	17
80205	MS51863-33	5305-01-138-9540	51	4
80205	MS51863-33	5305-01-138-9540	83	7
80205	MS51863-33	5305-01-138-9540	249C	7
80205	MS51863-33	5305-01-138-9540	51A	4
96906	MS51869-23	5305-01-039-6633	49	19
96906	MS51871-1	5305-01-084-6067	100	20
96906	MS51943-13	5310-01-215-7311	254	2
96906	MS51943-33	5310-00-814-0673	167F	18
96906	MS51943-39	5310-00-488-3889	116	1
96906	MS51943-39	5310-00-488-3889	134	22
96906	MS51943-39	5310-00-488-3889	141	6
96906	MS51943-39	5310-00-488-3889	145	2
96906	MS51943-39	5310-00-488-3889	149	5
96906	MS51943-39	5310-00-488-3889	150	1
96906	MS51943-39	5310-00-488-3889	256	2
96906	MS51943-39	5310-00-488-3889	257	12
96906	MS51943-39	5310-00-488-3889	263	1
96906	MS51943-39	5310-00-488-3889	116A	8
96906	MS51943-39	5310-00-488-3889	116A	14
96906	MS51943-39	5310-00-488-3889	125A	14
96906	MS51943-39	5310-00-488-3889	142A	12
96906	MS51943-39	5310-00-488-3889	150A	23
96906	MS51943-39	5310-00-488-3889	207A	23
96906	MS51943-39	5310-00-488-3889	252A	6
96906	MS51943-39	5310-00-488-3889	265B	1
96906	MS51943-39	5310-00-488-3889	265D	10
96906	MS51943-39	5310-00-488-3889	266A	1
96906	MS51943-39	5310-00-488-3889	266B	9
96906	MS51957-134	5305-01-052-4438	167B	7
96906	MS51957-62	5305-00-050-9228	274A	8

CAGE	PART NUMBER	STOCK NUMBER	FIG.	ITEM
96906	MS51957-64B	5305-01-083-1591	209A	2
96906	MS51957-67	5305-00-050-9233	167B	16
96906	MS51957-77	5305-00-071-1313	247	4
96906	MS51957-79	5305-00-071-1315	226	16
96906	MS51957-79	5305-00-071-1315	249	25
96906	MS51957-79	5305-00-071-1315	227C	15
96906	MS51957-79	5305-00-071-1315	227C	27
80205	MS51958-63	5305-00-059-3659	247	3
80205	MS51958-63	5305-00-059-3659	227D	6
96906	MS51959-99	5305-00-763-7829	212	1
96906	MS51960-70	5305-00-071-1327	226	10
96906	MS51960-70	5305-00-071-1327	227C	8
96906	MS51960-70	5305-00-071-1327	227C	20
80205	MS51964-65	5305-00-724-5812	233	21
96906	MS51967-12	5310-00-896-0903	134	22
96906	MS51967-14	5310-00-768-0318	66	1
96906	MS51967-14	5310-00-768-0318	246	20
96906	MS51967-18	5310-00-763-8919	130	5
96906	MS51967-3	5310-00-905-0762	228	36
96906	MS51967-3	5310-00-905-0762	228	42
96906	MS51967-3	5310-00-905-0762	255	1
96906	MS51967-3	5310-00-905-0762	117H	8
96906	MS51967-3	5310-00-905-0762	204A	16
96906	MS51967-3	5310-00-905-0762	228A	36
96906	MS51967-5	5310-00-880-7744	68	2
96906	MS51967-5	5310-00-880-7744	246	13
96906	MS51967-5	5310-00-880-7744	210A	20
96906	MS51967-6	5310-00-931-8167	162	20
96906	MS51967-6	5310-00-931-8167	205	15
96906	MS51967-6	5310-00-931-8167	138C	4
96906	MS51967-6	5310-00-931-8167	167H	22
96906	MS51967-6	5310-00-931-8167	201H	3
96906	MS51967-6	5310-00-931-8167	217B	6
96906	MS51967-8	5310-00-732-0558	48	4
96906	MS51967-8	5310-00-732-0558	60	8
96906	MS51967-8	5310-00-732-0558	273A	16
96906	MS51967-9	5310-00-761-0654	28	26
96906	MS51967-9	5310-00-761-0654	163	35
96906	MS51967-9	5310-00-761-0654	164	20
96906	MS51967-9	5310-00-761-0654	273	17
96906	MS51967-9	5310-00-761-0654	103A	10
96906	MS51967-9	5310-00-761-0654	143A	25
96906	MS51968-2	5310-00-768-0319	59	14
96906	MS51968-2	5310-00-768-0319	204A	31
96906	MS51968-6	5310-00-905-4600	108	13

CAGE	PART NUMBER	STOCK NUMBER	FIG.	ITEM
96906	MS51968-6	5310-00-905-4600	123A	11
96906	MS51968-8	5310-00-732-0559	254	5
96906	MS51968-8	5310-00-732-0559	257	3
96906	MS51969-5	5310-00-913-5474	67	7
80205	MS51975-23	5305-00-940-9445	12	13
80205	MS51975-8	5305-00-914-3818	12	8
80205	MS51975-8	5305-00-914-3818	12A	25
96906	MS51988-10	5310-00-935-3607	207A	22
96906	MS51988-10	5310-00-935-3607	221C	4
96906	MS51988-11	5310-00-849-3589	36	15
96906	MS51988-11	5310-00-849-3589	207B	43
96906	MS51988-11	5310-00-849-3589	38A	24
96906	MS51988-5	5310-00-176-6611	204A	40
96906	MS51988-7	5310-00-930-8214	163A	9
96906	MS51988-7	5310-00-930-8214	202B	23
96906	MS51988-7	5310-00-930-8214	202C	11
96906	MS51988-7	5310-00-930-8214	207B	30
96906	MS51988-8	5310-00-447-8774	87	2
96906	MS51988-8	5310-00-447-8774	101	1
96906	MS51988-8	5310-00-447-8774	101A	1
96906	MS521301A203R	4720-00-491-0102	BULK	19
96906	MS521304B203R	4720-00-930-2231	BULK	51
96906	MS75021-2	5935-00-846-3884	77	1
96906	MS87006-53	4030-00-916-2141	150	18
80205	MS90725-15	5305-00-071-2236	208	24
80205	MS90725-15	5305-00-071-2236	208A	26
80205	MS90725-34	5306-00-225-8499	112	25
80205	MS90725-34	5306-00-225-8499	122	11
80205	MS90725-34	5306-00-225-8499	163	25
80205	MS90725-34	5306-00-225-8499	164	18
80205	MS90725-34	5306-00-225-8499	204	4
80205	MS90725-34	5306-00-225-8499	230	15
80205	MS90725-34	5306-00-225-8499	236	3
80205	MS90725-34	5306-00-225-8499	237	6
80205	MS90725-34	5306-00-225-8499	163A	26
80205	MS90725-34	5306-00-225-8499	230A	15
80205	MS90725-39	5306-00-225-8503	230	12
80205	MS90725-39	5306-00-225-8503	230A	12
80205	MS90725-5	5305-00-068-0501	30	10
80205	MS90725-6	5305-00-068-0502	67	8
80205	MS90725-67	5305-00-269-3217	235	11
80205	MS90725-94	5305-00-069-5578	25	40
80205	MS90726-34	5306-00-225-9089	166A	45
80205	MS90726-34	5306-00-225-9089	167B	45
96906	MS90727-77	5305-00-269-4530	200D	12

CAGE	PART NUMBER	STOCK NUMBER	FIG.	ITEM
96906	MS90727-84	5305-00-709-8283	220	14
80205	MS90728-6	5305-00-068-0502	33	5
80205	MS90728-6	5305-00-068-0502	56	16
80205	MS90728-6	5305-00-068-0502	123	2
80205	MS90728-6	5305-00-068-0502	164	5
80205	MS90728-6	5305-00-068-0502	165	14
80205	MS90728-6	5305-00-068-0502	201	7
80205	MS90728-6	5305-00-068-0502	205	10
80205	MS90728-6	5305-00-068-0502	223	23
80205	MS90728-6	5305-00-068-0502	235	17
80205	MS90728-6	5305-00-068-0502	237	25
80205	MS90728-6	5305-00-068-0502	251	13
80205	MS90728-6	5305-00-068-0502	255	9
80205	MS90728-6	5305-00-068-0502	235A	16
96906	MS9176-13	5340-01-149-7976	3	28
81343	MS9386-011	5331-00-222-1709	117A	3
28666	MT161A	5330-01-282-2213	196D	10
19728	MZ-294		50	57
24975	MZ-414S	5310-01-214-7784	50	44
02697	N0674 2-236	5331-00-451-9005	252F	3
02697	N0674 5-617	5331-01-380-2118	138A	14
76761	N3135	2920-01-483-2291	46	27
76761	N7309	6115-01-349-5320	47	4
76761	N7312	2920-01-363-5173	47	1
76761	N7346		47	8
76761	N7347		47	10
76761	N7348		47	17
76761	N7370	4140-01-350-0839	46	22
76761	N9005	5305-01-032-4165	47	15
76761	N9008	5325-01-032-4222	47	12
76761	N9009	5325-01-034-2757	47	14
76761	N9010	3110-01-037-4661	47	13
76761	N9015	5310-01-046-0186	46	18
76761	N9018	5310-01-032-4827	46	29
76761	N9063	5310-01-050-6565	47	5
76761	N9077	5306-01-223-4345	46	20
76761	N9098	5310-01-225-0701	47	2
76761	N9099	5310-01-165-1312	47	7
76761	N9260	5325-01-136-7662	47	11
76761	N9265	5310-01-136-4888	47	16
76761	N9318	5999-01-348-0302	47	18
76761	N9331	5310-01-232-1361	46	11
76761	N9338	5310-01-232-1362	46	21
76761	N9385	3110-01-348-4867	47	9
76761	N9408	5310-01-348-8386	46	14

CAGE	PART NUMBER	STOCK NUMBER	FIG.	ITEM
76761	N9410	5310-01-348-8398	46	32
76761	N9414	5920-01-348-0303	46	13
76761	N9417	3120-01-348-3364	47	19
76761	N9420	5970-01-350-5646	46	12
76761	N9426	5310-01-348-8313	46	19
76761	N9452		47	3
76761	N9453	5310-01-348-8314	46	9
76761	N9455	5310-01-348-8385	46	17
76761	N9457	5306-01-348-8310	46	5
76761	N9459	5310-01-348-8393	46	6
76761	N9460	5365-01-348-6971	46	15
76761	N9461	5310-01-348-8392	46	10
76761	N9464	5975-01-350-1987	46	2
76761	N9465	5310-01-350-8549	46	4
76761	N9467	5310-01-350-4257	46	3
80205	NAS1080E6	5320-00-864-6203	156	13
80205	NAS1080E6	5320-00-864-6203	158	48
80205	NAS1080R8	5320-01-044-7545	158	28
80205	NAS1149F0332P	5310-00-167-0834	201B	26
80205	NAS1149F0863P	5310-01-396-8392	207A	11
80205	NAS1387-4	5940-00-113-9420	264	13
81343	NAS1464-050-10T	5340-01-450-8693	266	4
81343	NAS1464-050-10T	5340-01-450-8693	204A	43
80205	NAS1635-3-12P	5305-00-442-7347	46	30
80205	NAS1635-3LE12	5305-01-117-3396	227D	10
80205	NAS1715D13NH	5340-00-119-4708	232	37
80205	NAS387-832-12P	5305-01-035-8766	70	14
80205	NAS601-12P	5305-00-813-2785	249	11
80205	NAS601-12P	5305-00-813-2785	249	28
80205	NAS9301BNS-4-03	5320-01-138-4239	222	6
80205	NAS9301BNS-4-04	5320-01-143-5079	165	10
80205	NAS9301BNS-4-04	5320-01-143-5079	216	11
80205	NAS9301BNS-4-04	5320-01-143-5079	216	18
80205	NAS9301BNS-4-04	5320-01-143-5079	217B	12
80205	NAS9301BNS-4-05	5320-01-134-5844	210A	2
80205	NAS9301BNS-6-02	5320-01-143-5075	156	20
80205	NAS9301BNS-6-02	5320-01-143-5075	158	35
80205	NAS9301BNS-6-02	5320-01-143-5075	165	13
80205	NAS9301BNS-6-02	5320-01-143-5075	166	6
80205	NAS9301BNS-6-03	5320-01-135-7319	158	15
80205	NAS9301BNS-6-03	5320-01-135-7319	201K	12
80205	NAS9301BNS-6-04	5320-01-136-1782	165	21
80205	NAS9301BNS-6-04	5320-01-136-1782	166	11
80205	NAS9301BNS-6-04	5320-01-136-1782	201K	4
80205	NAS9301BNS-6-05	5320-01-084-9235	156	17

CAGE	PART NUMBER	STOCK NUMBER	FIG.	ITEM
80205	NAS9301BNS-6-05	5320-01-084-9235	158	38
80205	NAS9302BNS-6-03	5320-01-084-6101	156	19
80205	NAS9302BNS-6-03	5320-01-084-6101	158	37
80205	NAS9302BNS-6-04	5320-01-136-1785	165	30
80205	NAS9303B-6-06	5320-01-407-6239	156	9
80205	NAS9304BNS-6-03	5320-01-033-8638	165	35
80205	NAS9304BNS-6-05	5320-01-034-1884	227D	24
80205	NASM17986C506	5315-00-945-0548	205C	5
80205	NASM21333-108	5340-00-057-3025	264	10
80205	NASM24629-46	5305-00-855-0957	212	9
80205	NASM3 THRU NASM20-AN5H10A	5306-00-182-2027	247	11
80205	NASM35338-45	5310-01-523-2980	265A	10
80205	NASM35338-45	5310-01-523-2980	265F	5
80205	NASM35338-46	5310-01-513-5413	265A	2
80205	NASM35338-46	5310-01-513-5413	265B	15
80205	NASM35338-46	5310-01-513-5413	265C	6
80205	NASM35338-46	5310-01-513-5413	265D	2
80205	NASM35338-46	5310-01-513-5413	265E	11
1PUD1	NL-10	5310-01-457-3292	125A	2
1PUD1	NL-10	5310-01-457-3292	125B	2
76445	OE12010		152	4
76445	OE12011		152	4
9G287	P-050	2530-01-261-6844	131	16
9G287	P-050	2530-01-261-6844	131A	16
9G287	P-100	2530-00-848-4581	131	16
9G287	P-100	2530-00-848-4581	131A	16
9G287	P-150	2530-01-261-6845	131	16
9G287	P-150	2530-01-261-6845	131A	16
9G287	P-200	2530-01-261-6846	131	16
9G287	P-200	2530-01-261-6846	131A	16
21335	P207K	3110-00-155-6152	117	12
9G287	P-250	2530-01-262-8646	131	16
9G287	P-250	2530-01-262-8646	131A	16
9G287	P-400	2530-01-261-8013	131	16
9G287	P-400	2530-01-261-8013	131A	16
9G287	P-450	6670-01-261-6847	131	16
65035	P49866-11	5310-00-637-9541	67	9
65035	P49866-11	5310-00-637-9541	137	8
65035	P49866-11	5310-00-637-9541	167C	11
65035	P49866-11	5310-00-637-9541	167F	8
65035	P49866-11	5310-00-637-9541	167G	7
65035	P49866-11	5310-00-637-9541	189F	3
65035	P49866-11	5310-00-637-9541	189G	8
65035	P49866-11	5310-00-637-9541	189I	14
65035	P49866-11	5310-00-637-9541	189J	14

CAGE	PART NUMBER	STOCK NUMBER	FIG.	ITEM
65035	P49866-11	5310-00-637-9541	189K	6
65035	P49866-11	5310-00-637-9541	189L	14
65035	P49866-11	5310-00-637-9541	189M	9
65035	P49866-11	5310-00-637-9541	189O	5
65035	P49866-11	5310-00-637-9541	189P	18
65035	P49866-11	5310-00-637-9541	195E	12
65035	P49866-11	5310-00-637-9541	195F	18
65035	P49866-11	5310-00-637-9541	195H	6
65035	P49866-11	5310-00-637-9541	195J	3
65035	P49866-11	5310-00-637-9541	195J	11
65035	P49866-11	5310-00-637-9541	202A	9
9G287	P-500	2530-01-262-8647	131	16
9G287	P-500	2530-01-262-8647	131A	16
9G287	P-550	2530-01-263-2268	131	16
9G287	P-550	2530-01-263-2268	131A	16
70040	PF1218	4330-01-398-8484	13	7
61424	PFT-6B	4720-01-169-9891	BULK	12
61424	PFT-88-BLK-100	4720-01-003-6706	BULK	6
18876	PIF04510	5340-01-563-4904	167G	5
18876	PIF04510	5340-01-563-4904	167U	16
18876	PIF04511	5340-01-563-4862	167G	4
18876	PIF04511	5340-01-563-4862	167U	18
16941	PL25D02P12	5305-01-210-6249	227D	1
16941	PL25D040P8	5305-01-206-7217	249	27
16941	PL25J02P12	5305-01-199-3371	227	9
16941	PL25J02P20	5305-01-198-1619	249	19
0GZB7	PS18022	5330-01-495-0145	252F	8
06641	PTL21-C76	5975-01-517-9077	99A	1
76700	Q186425	5340-01-560-2676	138A	10
76700	Q206141	5340-01-505-9463	138A	9
76700	Q348148	4730-01-506-3179	138A	7
76700	Q63330	5360-01-546-2755	138A	12
76700	Q79699	5330-01-505-7214	138A	11
76700	Q79870	5331-01-505-7218	138A	8
26051	R-451-N	5330-01-041-9721	BULK	3
77060	R-68237	5975-01-461-1433	77	15
34623	RCSK17040	2510-01-434-7238	162	16
34623	RCSK17047	5310-01-473-3373	119	8
34623	RCSK17079	2990-01-422-2826	35	33
34623	RCSK17089-1	2530-01-420-7892	120	6
34623	RCSK-17089-2	2530-01-420-7893	120	6
34623	RCSK17158	2930-01-433-2547	38	3
34623	RCSK17178	2510-01-474-5371	157	24
34623	RCSK17178-1	2510-01-460-9080	157	24
34623	RCSK17181	2590-01-449-1777	256	1

CROSS REFERENCE INDEXES
PART NUMBER

CAGE	PART NUMBER	STOCK NUMBER	FIG.	ITEM
34623	RCSK17191	5340-01-432-4869	143	10
34623	RCSK17197		141	1
34623	RCSK17197-1		141	1
34623	RCSK17221	2990-01-442-1168	17	7
34623	RCSK17275	4720-01-433-8266	40	7
34623	RCSK17277	2930-01-433-2550	12	12
34623	RCSK17282	2990-01-433-2546	17	8
34623	RCSK17289	5340-01-432-4881	38	4
34623	RCSK17305	2520-01-416-5217	111	4
34623	RCSK17305	2520-01-416-5217	116	4
34623	RCSK17306	3020-01-444-1846	117	26
34623	RCSK17306-1		117	27
34623	RCSK17306-2		117	28
34623	RCSK17339	5342-01-433-0932	14	8
34623	RCSK17349	2510-01-434-6103	165	17
34623	RCSK17368-2	5340-01-432-4882	72	25
34623	RCSK17413	5340-01-434-8111	165	24
34623	RCSK17450	5340-01-434-2851	256	10
34623	RCSK17451-1	5340-01-487-7203	256	5
34623	RCSK17451-2	5340-01-486-1539	256	18
34623	RCSK17484	5340-01-473-2686	257	8
34623	RCSK17488	2590-01-473-0265	257	1
34623	RCSK17518	5340-01-433-7907	162	11
34623	RCSK17519	2540-01-455-9322	162	11
34623	RCSK17531	5330-01-433-5054	163	5
34623	RCSK17531	5330-01-433-5054	164	6
34623	RCSK17542G1	6160-01-472-6362	216	14
34623	RCSK17566	9905-01-433-8555	239	3
34623	RCSK17567	4130-01-420-8306	273	10
34623	RCSK17567	4130-01-420-8306	273A	2
34623	RCSK17579-2	4720-01-446-7223	12	24
34623	RCSK17579-3	4720-01-457-6586	12	23
34623	RCSK17603	5310-01-433-0938	235	15
19207	RCSK17609	6150-01-433-7000	236	20
34623	RCSK17624	7690-01-473-4532	240	6
34623	RCSK17624	7690-01-473-4532	244	1
34623	RCSK17639	5340-01-434-8113	165	25
34623	RCSK17645-1	2590-01-475-1325	200	22
34623	RCSK17645-2	2590-01-475-1318	200	28
34623	RCSK17646-1	2510-01-475-0796	200	36
34623	RCSK17646-2	2510-01-475-0779	200	10
34623	RCSK17649	2540-01-423-3199	130	10
34623	RCSK17694	2540-01-472-9343	213	17
34623	RCSK17748	5365-01-455-7545	4	13
34623	RCSK17749	3020-01-442-7485	4	12

CAGE	PART NUMBER	STOCK NUMBER	FIG.	ITEM
34623	RCSK17758	2590-01-434-6177	213	25
34623	RCSK17759	2590-01-434-6180	213	6
34623	RCSK17759	2590-01-434-6180	269A	2
34623	RCSK17769-5		BULK	38
34623	RCSK17777	7690-01-473-4645	239	3
34623	RCSK17796	4320-01-434-2835	165	32
34623	RCSK17806-1	5340-01-472-8859	253	4
34623	RCSK17806-2	5340-01-472-8865	253	4
34623	RCSK17829	2815-01-439-8163	15	3
34623	RCSK17839-1		255	13
34623	RCSK17839-2		255	16
34623	RCSK17849	5340-01-472-9381	253	20
34623	RCSK17851	5340-01-485-6967	256	14
34623	RCSK17872	5307-01-472-5614	142	3
34623	RCSK17874	2510-01-432-5134	142	1
34623	RCSK17874-3		142	7
34623	RCSK17874-4		142	2
34623	RCSK17903	5365-01-433-6267	273	11
34623	RCSK17920	7690-01-473-4594	242	1
34623	RCSK17960		165	20
34623	RCSK18034-1		166	4
34623	RCSK18034-2		166	4
34623	RCSK18036-1		166	14
34623	RCSK18036-2		166	14
34623	RCSK18037-2	5330-01-460-9004	166	17
34623	RCSK18037-3	5330-01-461-1428	166	16
34623	RCSK18038	2510-01-461-1397	166	10
34623	RCSK18046-8	2540-01-473-0354	214	6
34623	RCSK18047	5330-01-460-8997	166	15
34623	RCSK18059-1	2510-01-461-0568	36	8
34623	RCSK18059-2	2510-01-461-0562	36	8
34623	RCSK18060	5365-01-472-9876	143	9
34623	RCSK18088	5340-01-456-1502	62	4
34623	RCSK18089	2815-01-437-7408	17	4
34623	RCSK18097	5340-01-456-1503	162	27
34623	RCSK18121	4710-01-473-2352	233	8
34623	RCSK18122	5306-01-473-2641	254	6
34623	RCSK18124	5340-01-473-1717	254	8
34623	RCSK18136	4820-01-456-0168	126	15
34623	RCSK18136	4820-01-456-0168	126A	3
34623	RCSK18197	2590-01-473-0566	216	19
34623	RCSK18221	3020-01-442-7278	43	3
34623	RCSK18242	2510-01-465-1512	159	5
34623	RCSK18242G1	2510-01-465-1512	159	5
34623	RCSK18263		1	2

CAGE	PART NUMBER	STOCK NUMBER	FIG.	ITEM
34623	RCSK18268	2920-01-444-2749	45	8
34623	RCSK18278-6	2590-01-444-3317	42	9
34623	RCSK18278-7	2590-01-444-5046	273	31
34623	RCSK18415	5365-01-474-7490	12	9
34623	RCSK18418	5340-01-475-3464	12	10
34623	RCSK18419	5340-01-475-5065	12	16
34623	RCSK18424	5330-01-456-8882	163	34
34623	RCSK18424	5330-01-456-8882	164	11
34623	RCSK18434-2	4720-01-442-9875	126	1
34623	RCSK18627	3020-01-458-0185	42	3
34623	RCSK18627	3020-01-458-0185	273	3
34623	RCSK18628	3020-01-462-1202	42	4
34623	RCSK18628	3020-01-462-1202	273	4
34623	RCSK18683	5365-01-480-5282	42	19
34623	RCSK-18685	3020-01-444-5447	45	5
34623	RCSK18686	3020-01-444-2311	137	3
34623	RCSK18754	2510-01-439-7087	161	21
34623	RCSK19019	5340-01-525-0633	196G	41
34623	RCSK19024	5340-01-525-0619	196G	30
34623	RCSK19098		196G	2
34623	RCSK19102-1	5305-01-525-1327	196G	23
34623	RCSK19171	2590-01-539-3332	196G	42
34623	RCSK19361	5340-01-488-6185	138A	5
34623	RCSK19775	5360-01-524-6029	151	1
34623	RCSK19782	5340-01-525-4656	235A	11
34623	RCSK19805	5340-01-538-5849	226A	6
34623	RCSK19811	5340-01-525-8546	235A	9
34623	RCSK23646	4720-01-558-7665	138C	16
81348	RR-C-271-6		150	17
33287	RS-3400-135		299	10
33287	RS-5700-125		299	13
33287	RS-5701-795		299	12
53551	RV817	5130-01-045-3507	298	13
53551	RV818	5130-01-044-7196	298	12
25472	S10P320	5310-01-197-6253	223	26
25472	S25-140	5310-00-006-8291	212	43
83187	S25P280	5310-01-198-1722	161	26
82484	S-3076	3120-01-432-1474	228	7
82484	S-3076	3120-01-432-1474	228A	7
82484	S-3087	3120-01-388-1527	228	8
82484	S-3087	3120-01-388-1527	228A	8
56988	S731	5360-01-474-9653	170	16
56988	S731	5360-01-474-9653	181	11
56988	S731	5360-01-474-9653	167D	25
53964	SA609010	5305-01-190-4073	31	2

CAGE	PART NUMBER	STOCK NUMBER	FIG.	ITEM
81343	SAE J1508	4730-00-908-3195	228	25
81343	SAE J20-1	4720-00-555-8015	BULK	13
81343	SAE J512 3-3-3	4730-00-287-1706	126	33
81343	SAE J512 3-3-3 040401BA	4730-00-287-1706	126A	25
81343	SAE J512 4 040110B	4730-00-014-2432	20	14
81343	SAE J514 6-4 070102C	4730-01-488-6433	140	1
81343	SAE J514 6-4 070102C	4730-01-488-6433	117E	7
81343	SAE-20R1ECLTS-A-25XR	4720-00-401-9299	BULK	66
19728	SAT-1004F		50	31
68505	SAT-1004FS	2920-01-192-4474	KITS	5
19728	SAT-1014B		50	35
24975	SAT-32	5330-00-193-0850	50	32
19728	SAT-40		50	37
68505	SAT4108UT	5945-01-210-1299	50	20
19728	SAT-46		50	28
19728	SAT-47		50	26
19728	SAT-48		50	24
19728	SAT-52		50	25
24975	SAV-1008A	2920-01-184-1054	50	21
28520	SB-750-625-2840	5975-01-211-3142	29	16
53964	SC220072	4330-01-190-3579	31	7
99587	SC300079		31	5
53964	SC300081		31	9
2L480	SD1130 5.38"MIN/5.62"MAX	2590-01-507-3608	232	24
63477	SE1589	2530-01-413-1366	114	8
63477	SE1590	3040-01-422-9390	114	16
63477	SE1590	3040-01-422-9390	120	16
63477	SE639	2530-01-566-7801	134	10
63477	SE640	2530-01-566-1485	134	16
01212	SE80271	2530-01-566-0133	134	5
63477	SE80289	2530-01-566-1514	134	2
63477	SE80886		134	15
34623	SF5575898		68	7
34623	SF5581723	2510-01-197-5546	249	13
34623	SF5581724	2510-01-197-5547	249	13
34623	SF5585243		228	50
34623	SF5585243		228A	49
34623	SF5585258		228	24
34623	SF5585258		228A	24
34623	SF5590706		212	17
34623	SF5590706		210A	7
34623	SF-5597692	5640-01-309-3866	159	4
0B0B1	SH1366	3120-01-152-2611	8	13
66295	SIZE83	4730-01-092-1904	232	8
01RE3	SL195	2815-01-456-2772	3	29

CROSS REFERENCE INDEXES
PART NUMBER

CAGE	PART NUMBER	STOCK NUMBER	FIG.	ITEM
01RE3	SL195X	2815-01-456-2763	3	29
01RE3	SL295	2815-01-456-2774	3	29
55719	SRES18	5120-01-367-3582	299	2
55719	SRES24	5120-01-367-3585	299	2
08718	SS2R-120-1804-000	5935-01-149-5165	73	6
08718	SS4R-120-1806-000	5935-01-154-6233	73	5
19728	SS-88A		50	36
8J942	SSLQ-68	5320-01-255-6608	160	4
05693	SSPV-810	5320-01-150-9681	167	23
05693	SSPV-810	5320-01-150-9681	179	10
0ZM57	ST019-01P		150A	18
0ZM57	ST021-01P		150A	30
0ZM57	ST023-02P		150A	11
14242	ST1536	5340-01-456-3917	189A	9
14242	ST1536	5340-01-456-3917	189B	20
14242	ST1536	5340-01-456-3917	189D	9
0ZM57	STA001-05P		150A	15
0ZM57	STA002-02P	3010-01-542-8199	150A	5
0ZM57	STA003-04P		150A	26
0ZM57	STA005-05P		150A	22
0ZM57	STA007-05	2590-01-525-1995	KITS	6
0ZM57	STA010-01P	5120-01-534-5919	150A	6
0NM25	T-1350B2X1/4		BULK	57
28666	T2H2-38P2A	5330-01-571-6218	200C	1
0NM25	T-6100B3X3/16AWB	5330-01-568-2598	166B	18
59875	TD97203	5325-00-263-6651	74	13
56501	TG15	5940-00-705-6715	71	14
56501	TG2	5940-00-705-6702	78	12
56501	TG3	5940-00-705-6703	71	15
56501	TG3	5940-00-705-6703	77	13
56501	TG33	5940-00-735-5520	49	9
56501	TG33	5940-00-735-5520	49	15
56501	TG33	5940-00-735-5520	66	11
56501	TG8	5940-00-705-6708	71	13
56501	TG8	5940-00-705-6708	76	15
56501	TG8	5940-00-705-6708	77	7
56501	TG9	5940-00-705-6709	71	6
56501	TG9	5940-00-705-6709	76	21
55719	TLE60A	5120-01-452-4396	299	3
92830	TO48-270-250L	5360-01-101-2143	200H	19
17875	TRVC-8	2640-01-098-2029	131	8
09527	TS6059	6620-01-194-6586	62	11
76599	TSS28S30	4730-01-565-8006	40A	1
76599	TSS32S30	4730-01-565-7997	40A	5
71124	TURB0LEX76B	5970-00-221-5301	66	26

CAGE	PART NUMBER	STOCK NUMBER	FIG.	ITEM
71124	TURB0LEX76B	5970-00-221-5301	255	17
71124	TURBOLEX76B	5970-00-221-5301	66	21
14557	U-6236	5340-01-197-8239	205	24
14557	U-6236	5340-01-197-8239	205A	21
59199	UM5008	4730-00-954-1251	112	10
59199	UM5008	4730-00-954-1251	251	16
61125	V1K-11663000	4730-00-150-6118	21	8
95021	V8508	5120-00-596-8508	290	14
05TS2	VHTR-1-DAAC-50V	2510-01-458-8036	BULK	20
80604	W-129-B	4910-00-105-2823	296	6
79470	W21204	4730-00-897-5497	140	13
3ES68	W250D54	2940-01-548-1183	25	21
99017	W-5	5340-01-255-1657	161	23
34419	WAS2217		230B	10
81349	WW-P-471ACABUA	4730-01-166-2244	88	13
50372	X-139-A	3110-01-568-9378	170A	20
50372	X-140-A	3110-01-568-8305	170A	19
19728	X-3508		50	33
19728	X-3925SC		50	62
41885	X91430	5306-01-417-2467	131	3
41885	X91430	5306-01-417-2467	131A	3
68505	XA-1642	5330-01-209-7669	50	3
19728	XA-744AP		50	52
13940	XB78323-05001	5325-00-823-5999	157	2
13940	XB78323-05001	5325-00-823-5999	158	11
13940	XB78323-05001	5325-00-823-5999	212	23
13940	XB78323-05001	5325-00-823-5999	227	7
13940	XB78323-05001	5325-00-823-5999	247	6
13940	XB78323-05001	5325-00-823-5999	227A	11
13940	XB78323-05001	5325-00-823-5999	227D	8
04XS7	Z-160-9535	2530-01-567-0893	125A	3
04XS7	Z-160-9535	2530-01-567-0893	125B	3
04XS7	Z-250-9941	2530-01-567-0587	125B	14
04XS7	Z-250-9942	2530-01-567-0607	125B	14
04XS7	Z-250-9943	2530-01-567-0400	125A	4
04XS7	Z-250-9944	2530-01-567-0232	125A	4
0NM25	ZG-7099		200B	6
0NM25	ZR352P		BULK	63
62226	0.1581	2540-01-381-9331	215	17
19220	249	5340-01-209-4870	166A	11
19220	249	5340-01-209-4870	166B	20
19220	249	5340-01-209-4870	167B	11
61864	400	5325-00-281-8642	226	3
84760	405	5331-00-641-8283	24	13
5L381	531	5305-01-211-6049	54	3

CAGE	PART NUMBER	STOCK NUMBER	FIG.	ITEM
70485	963	5325-01-195-8002	68	6
70082	1302	2540-01-437-9932	230	4
70082	1302	2540-01-437-9932	230A	4
70082	1411	2540-01-487-3673	230	4
70082	1411	2540-01-487-3673	230A	4
01276	1537	4730-01-004-8346	112	20
79470	1582	4730-01-200-4277	112	9
79470	1582	4730-01-200-4277	251	20
08108	1683	6240-00-044-6914	57	7
08108	1683	6240-00-044-6914	58	7
08108	1683	6240-00-044-6914	60	3
45225	1726	4910-00-506-0037	289	2
27646	1833	5360-01-420-0480	260	8
27646	1834	3110-01-444-4020	260	7
14153	2175	5310-01-032-4169	46	28
70485	2302	5325-00-515-9685	81	10
28520	2400	5325-01-289-7859	70	7
28520	2400	5325-01-289-7859	81	23
17875	2529	2640-01-335-4583	131	10
28520	2683	5340-01-203-1980	156	11
1CHB0	4611	9320-01-155-2369	BULK	33
36251	5311	4730-00-585-2653	133	25
70082	6185	5307-01-316-2986	230A	18
70082	6388	2540-01-314-1188	230A	6
70082	6389	5340-01-315-3611	230	14
70082	6389	5340-01-315-3611	230A	14
7Z588	6704	4730-01-118-8278	30	5
27647	6779	5310-01-213-4174	254	9
27647	6779	5310-01-213-4174	257	4
27647	6779	5310-01-213-4174	260	4
75638	6805	5310-00-205-9078	290	8
80604	6888	5120-01-437-0480	301	8
70082	7243	5365-01-315-3595	230	8
70082	7243	5365-01-315-3595	230A	8
70082	7243	5365-01-315-3595	230B	16
13548	7320	6220-01-496-1925	60	1
27646	8548	5305-01-210-2309	255	19
27646	8548	5305-01-210-2309	260	46
12195	8973	2610-01-541-4090	132A	1
70655	9382	5340-01-134-5937	186	5
60602	10166	5315-01-284-9812	33	14
84760	10394		241	2
84760	10445	5325-00-598-1428	24	20
84760	10453	5330-00-757-1680	24	5
84760	10498	5310-01-258-2639	291	5

CROSS REFERENCE INDEXES
PART NUMBER

CAGE	PART NUMBER	STOCK NUMBER	FIG.	ITEM
84760	10541	5360-00-887-1536	24	3
60602	10618		33	13
84760	11067	5340-01-159-8534	24	24
84760	11068	5340-01-159-8535	24	24
84760	11069	5340-01-159-8536	24	24
84760	11070	3120-01-239-5132	24	24
84760	11072	5340-01-415-9627	24	24
84760	11073	5340-01-433-4750	24	24
84760	11074	5340-01-433-4752	24	24
84760	11075	5340-01-415-9628	24	24
84760	11141	5315-00-887-1539	24	22
84760	11175	5305-00-207-3984	24	34
84760	11331	5306-00-819-3038	24	12
27646	11524	5310-01-474-2938	254	10
27646	11524	5310-01-474-2938	257	5
27646	11524	5310-01-474-2938	260	5
84760	11563	4820-00-786-3971	24	8
84760	11563	4820-00-786-3971	24	11
84760	11582	5310-01-213-9964	22	2
76760	11797	5306-01-359-4530	103	2
84760	11919	5360-00-335-9327	22	27
55787	12351	5325-01-135-4290	204	35
84760	12500	5310-00-830-7825	22	9
32546	13044	4730-00-172-0010	133	17
70412	13194	2540-01-212-4959	228	2
78514	13382	5310-01-259-7433	291	3
78514	13396	5305-01-253-6508	291	4
76760	13627	5315-01-160-4642	103	23
76760	13766	2520-01-174-9554	102	34
76760	13877	5325-01-358-7961	103	42
84760	14408	5365-00-877-4956	23	7
27646	14916	3020-01-446-4387	260	13
27647	14964	5330-01-306-7887	260	24
84760	15093	3120-00-993-4152	24	44
76760	15105	5340-01-290-6234	101	3
76760	15105	5340-01-290-6234	102	37
84760	15228	4730-00-459-6077	23	32
27646	15271	3120-01-435-2560	260	41
84760	15383	3120-01-255-9328	291	11
84760	15384	5310-01-257-9101	291	10
84760	15385	5310-01-257-9034	291	9
76760	15556	2520-01-358-8883	105	10
76760	15574	5330-01-359-1292	103	35
27647	15603	5305-01-309-1521	260	1
27646	15643	3010-01-444-4018	260	12

CAGE	PART NUMBER	STOCK NUMBER	FIG.	ITEM
27647	15686	5365-01-306-9955	260	9
84760	15699	5360-00-900-2564	23	25
76760	15715	5331-01-358-9545	102	28
76760	16104	5330-01-358-9540	101A	4
76760	16188		102	4
76760	16214	5330-01-358-9541	103	11
76760	16218	4720-01-358-6100	103	13
76760	16244	2520-01-358-8880	102	2
76760	16275	3040-01-358-8691	103	44
76760	16276	3020-01-358-8659	103	33
76760	16286	5310-01-358-7975	103	7
76760	16290	3020-01-358-8661	103	8
76760	16297	5365-01-358-4641	103	17
76760	16310	2590-01-358-7643	105	6
78514	16313	5120-01-197-0236	291	15
84760	16314	5120-01-208-1767	291	12
76760	16397	5325-01-358-7958	102	10
76760	16447	5340-01-358-7940	105	17
76760	16449	3040-01-358-8596	105	5
76760	16456	5310-01-358-7978	105	13
76760	16457	3120-01-359-6764	105	15
76760	16466	5325-01-358-7959	102	17
76760	16467	5310-01-358-5461	102	16
76760	16472	2520-01-358-8701	105	1
76760	16473		105	4
76760	16474	2590-01-358-7644	105	7
76760	16651	2520-01-358-8878	103	3
76760	16686	4320-01-358-8608	103	40
76760	16754	5340-01-358-8000	102	30
76760	16756	5305-01-359-4586	102	27
1S0R6	17045	2530-01-562-6049	131A	2
76760	17071	5360-01-358-6563	102	29
76760	17387	3040-01-358-8708	102	24
76760	17475	3120-01-417-8178	103	31
76760	17510	4710-01-358-8410	103	12
76760	17562		105	11
76760	17564	5360-01-358-5420	105	16
76760	17566	3020-01-359-1136	103	6
76760	17567	3110-01-359-6669	103	5
76760	17568	5310-01-358-7974	103	4
76760	17570	3020-01-358-8656	103	9
76760	17571	3020-01-359-2529	103	47
76760	17573	2520-01-358-8658	103	10
76760	17575	3020-01-358-8662	103	16
76760	17577	3020-01-358-8601	103	48

CAGE	PART NUMBER	STOCK NUMBER	FIG.	ITEM
76760	17578		103	39
76760	17585	3040-01-359-1118	103	37
76760	17586	2520-01-358-8700	105	8
76760	17588	2520-01-358-8879	103	1
84760	17777	5306-01-255-2630	291	8
84760	17787	5120-01-251-1901	291	7
76760	17844	5305-01-416-1269	103	27
76760	17855		102	14
76760	17869	3010-01-412-0673	102	19
84760	18021	2910-01-189-2142	22	25
1S0RS	18069	2530-01-558-3061	131A	6
1S0R6	18109	2530-01-562-6058	131A	6
84760	18411	5180-01-189-0448	291	6
84760	18493	5310-01-118-2248	22	33
76760	19016	5330-01-413-3713	102	31
76760	19016	5330-01-413-3713	101A	15
052C4	19017		112	10
1S0RS	19026	2530-01-558-3027	131A	2
76760	19099	2520-01-413-1900	102	9
76760	19134		103	32
76760	19140	2520-01-413-1904	103	29
84760	19837	5315-01-188-0495	23	26
33287	19845	4820-01-252-6169	298	4
84760	19969	5210-01-200-4526	291	18
84760	20222	3120-00-393-4067	24	18
84760	20523	2910-01-188-3250	23	30
84760	20528	5325-01-188-0960	23	28
84760	20530	2910-01-189-0895	23	22
78514	20548	5120-01-207-5563	291	13
84760	20803	2910-01-230-9007	23	24
84760	20804	2910-00-148-6555	23	24
84760	20951	2920-01-117-3251	22	5
27647	21009	3040-01-307-6157	260	10
76760	21065	3040-01-413-4022	103	15
76760	21068	2520-01-413-1899	102	13
84760	21194	5305-01-188-0948	24	40
84760	21200	2910-01-188-3249	23	27
84760	21201	3040-01-188-3261	24	39
84760	21284	5315-01-167-5584	23	10
84760	21312	2910-01-117-7252	24	19
84760	21358	5360-01-190-6215	23	1
30282	21465	5180-01-195-9777	294	2
14846	21552	5120-01-179-1032	297	8
84760	21646	5305-01-215-9425	23	2
84760	21661	5305-01-188-0490	24	45

CAGE	PART NUMBER	STOCK NUMBER	FIG.	ITEM
84760	21662	5305-01-188-0491	24	45
84760	21663	5305-01-188-0492	24	45
84760	21664	5305-01-188-0493	24	45
84760	21665	5305-01-188-0494	24	45
76760	21727	5330-01-415-9612	103	20
84760	21860	5330-01-192-5779	24	6
84760	21895	2910-01-188-3255	24	9
76760	21909	3040-01-420-1887	103	18
84760	21917	5360-01-189-3466	24	10
84760	22064	5315-01-191-3393	24	2
78514	22089	6675-01-247-2286	292	3
84760	22325	5310-01-188-6743	22	24
84760	22327	2910-01-188-3252	22	31
27646	22350	3110-01-444-4100	260	14
84760	22351	5305-01-118-4114	22	3
84760	22367	2910-01-190-0069	23	41
84760	22397	5315-01-190-0429	23	15
84760	22398	5305-01-190-5745	23	9
84760	22505	5365-01-318-1887	23	43
78514	22727	5120-01-208-7752	291	16
84760	22734	5305-01-188-6566	24	45
84760	22900	5365-01-188-0993	23	4
84760	22917	5340-01-192-6030	23	17
84760	22939	5120-01-078-1899	290	18
84760	22988	2910-01-232-1044	23	23
84760	23056	5365-01-188-0785	23	39
78514	23080	5210-01-249-0370	292	1
84760	23100	5315-01-188-0765	24	1
84760	23101	3110-01-188-7682	24	7
84760	23107	5340-01-188-3176	24	41
84760	23120	3040-01-192-4585	24	37
84760	23124	5305-01-188-6567	24	30
84760	23183	4820-01-165-9596	22	10
84760	23190	4710-01-230-5611	22	18
84760	23190	4710-01-230-5611	22	20
84760	23238	5360-01-188-6806	24	35
84760	23461	2520-01-188-3282	22	28
84760	23566	5325-01-188-0962	23	13
84760	23585	5310-01-318-1883	24	14
84760	23610	3040-01-317-0367	22	30
78514	23614		291	2
78514	23615	5120-01-208-7753	291	1
84760	23685	5315-01-188-0766	24	1
78514	23715	5220-01-247-0361	292	4
84760	23744	5360-01-317-8098	22	21

CAGE	PART NUMBER	STOCK NUMBER	FIG.	ITEM
78514	23745	5210-01-249-0368	292	2
78514	23805	5120-01-208-7771	291	14
84760	23915	5360-01-318-1894	23	33
84760	23925	5315-01-189-2141	23	37
27646	24293	5360-01-419-7933	260	28
84760	24419	5305-01-190-4555	241	1
84760	24441	4820-01-182-1073	24	8
27646	24563	3010-01-444-4019	260	15
84760	24569	3040-01-188-3242	24	23
84760	24585	5331-01-215-9638	23	5
27646	24800	6110-01-434-5562	260	51
27646	24832	3020-01-444-1359	260	11
84760	24880	2910-01-316-2312	22	22
27646	25364	3040-01-420-0465	260	3
27646	25671	5307-01-473-2757	254	11
27646	25671	5307-01-473-2757	257	6
84760	26027	5310-01-266-6425	24	27
84760	26070	2910-01-191-8464	24	31
84760	26071	5360-01-260-5649	24	32
84760	26081	5120-00-816-7059	291	17
84760	26087	5305-01-260-5737	23	16
84760	26181	5360-01-317-9451	23	6
84760	26387	5945-01-517-3434	22	19
84760	26431	5340-01-334-1422	KITS	33
84760	26495	5307-01-317-6317	24	15
84760	26787	5305-01-363-7825	23	36
84760	26890	2910-01-210-6938	24	43
84760	26961	5340-01-415-9633	24	16
84760	27006	3040-01-189-2163	23	11
84760	27007	5945-01-190-3559	22	17
84760	27008	5940-01-185-1122	22	14
84760	27009	5310-01-191-0440	22	13
84760	27010	2920-01-188-3259	22	12
84760	27014	5340-01-250-3240	22	16
84760	27065	2530-01-194-9868	22	15
84760	27163	5330-01-233-8597	23	18
84760	27245	5331-01-236-0475	24	36
27646	27569	4010-01-426-4536	260	43
84760	27608	5330-01-236-0474	23	21
84760	27609	5330-01-233-2778	23	20
84760	27833	3040-01-188-3243	24	37
84760	27927	2910-01-256-9157	22	32
84760	27984	2990-01-320-8915	24	38
84760	28012	4820-01-316-2497	24	33
84760	28013	4820-01-317-0552	24	33

CROSS REFERENCE INDEXES
PART NUMBER

CAGE	PART NUMBER	STOCK NUMBER	FIG.	ITEM
27646	28100	7690-01-473-6602	244	2
21699	28200	5895-01-435-3947	63	3
84760	28463	5360-01-413-7368	23	40
27646	28638	7690-01-473-2758	244	3
84760	28861		24	21
84760	28937	3040-01-317-0368	23	12
84760	28981	2910-01-414-0346	23	29
84760	28986	2910-01-363-8782	23	31
84760	29040	2815-01-446-9537	23	42
84760	29041	2910-01-445-9041	23	42
84760	29042	2910-01-414-7888	23	42
84760	29043	2910-01-414-6651	23	42
84760	29045	5340-01-439-6455	23	19
84760	29122	3040-01-445-9101	23	8
84760	29384	5340-01-414-0247	24	28
27646	29519	4030-01-426-4537	260	45
84760	29546	3040-01-247-0893	24	4
84760	29710	5305-01-191-0374	24	29
84760	29864	5360-01-437-1104	22	23
60602	30071		33	9
60602	30073	5305-01-290-8206	33	11
27646	30260	3010-01-429-5333	260	40
92878	30266	6105-01-211-6635	233	13
27647	30274	3120-01-447-8658	260	22
27647	30274	3120-01-447-8658	260	36
27646	30275	5330-01-446-4696	260	21
27646	30275	5330-01-446-4696	260	35
27646	30277	3120-01-447-8663	260	19
27646	30328	5305-01-448-5080	260	23
27646	30331	7690-01-469-2566	244	5
27646	30335	3010-01-306-4113	260	25
84760	30405	2910-01-299-0473	KITS	38
81795	30489	5310-00-472-3214	266E	2
84760	30776	5360-01-413-7363	22	29
84760	30844	5325-01-413-7364	23	14
27646	31146	5340-01-419-9075	260	33
84760	31240	2910-01-438-0655	23	34
84760	31506	2910-01-414-5382	24	25
27646	31585	5340-01-430-0037	260	47
27646	31597	5935-01-431-5656	260	50
27647	31604	5945-01-431-5195	260	42
84760	31843	2815-01-436-8370	23	44
24161	32028	4730-01-089-4596	62	3
27646	32062	3120-01-435-2495	260	37
27647	32208	5365-01-434-0186	260	30

CAGE	PART NUMBER	STOCK NUMBER	FIG.	ITEM
27646	32209	3040-01-446-3684	260	16
27646	32231	2590-01-446-5962	260	17
27647	32235	6105-01-434-1729	260	52
27646	32236	3950-01-435-1014	260	34
27646	32237	2590-01-446-5957	260	20
27646	32237	2590-01-446-5957	260	31
27646	32239	3020-01-446-3695	260	26
10237	32244	9905-01-060-0479	260	29
84760	34402	5305-01-414-3012	23	45
27646	34552	7690-01-444-1355	244	4
27647	34848	5365-01-426-6643	260	27
14846	35199	5180-01-216-8643	296	7
60602	35752	2590-01-279-5714	33	7
27647	36974	5305-01-448-5074	260	18
95019	41292	5330-01-174-8146	117	7
76760	42054	2520-01-358-7698	104	4
31272	44877	5340-01-199-3510	249	30
31272	44884	5340-01-197-6753	204	39
31272	45057	2540-01-525-0941	196G	36
81263	46827	5305-01-197-7547	65	12
38506	52252	2590-01-316-2581	227B	4
76760	54815	2520-01-571-5785	101A	3
27646	61124	3040-01-509-6021	260	6
76760	61573	5306-01-152-4696	103	21
81646	62606	4730-00-024-3971	27	13
81646	62606	4730-00-024-3971	31	22
70412	62886	5305-01-229-7855	228	3
70412	62886	5305-01-229-7855	228A	3
27646	64325	3040-01-444-1756	260	2
97271	80612	5340-01-488-6234	117A	4
13445	83320	5310-01-186-6930	66	9
13445	85031	5310-01-186-7066	66	7
13445	85031	5310-01-186-7066	67	3
13445	85764	5310-01-185-7188	66	6
13445	85764	5310-01-185-7188	67	4
97271	85914		116A	12
76760	91386	5315-00-576-0265	102	38
76760	91386	5315-00-576-0265	105	18
73165	91599	5330-01-372-0636	9	17
41885	91610	5331-01-417-1043	131	4
41885	91610	5331-01-417-1043	131A	4
62380	100424	5340-01-285-5558	249A	9
24975	105651	6220-00-880-1624	57	4
34355	106450	5930-00-683-1628	249C	9
15434	109155	5315-00-839-2325	33	20

CROSS REFERENCE INDEXES
PART NUMBER

CAGE	PART NUMBER	STOCK NUMBER	FIG.	ITEM
15434	109155	5315-00-839-2325	33	30
34623	114653	5310-01-474-1368	249B	3
7X677	116000	5310-01-187-0678	248	15
24617	116003	5310-01-422-2147	249B	12
29930	116103	5330-00-135-6383	88	21
24617	120214	5310-00-012-0214	266	15
72582	120217	5310-00-922-2017	64	3
72582	120217	5310-00-922-2017	81	2
72582	120217	5310-00-922-2017	167	12
72582	120217	5310-00-922-2017	212	48
72582	120217	5310-00-922-2017	264	2
72582	120217	5310-00-922-2017	167A	12
72582	120217	5310-00-922-2017	209A	3
72582	120217	5310-00-922-2017	210A	27
24617	120367	5310-00-012-0367	266	11
24617	120376	5310-00-409-3355	138A	2
72582	120382	5310-00-774-7293	74	7
24617	120384	5310-00-482-9493	42	6
24617	120384	5310-00-482-9493	101	5
29510	120384	5310-00-011-6121	249C	5
29510	120384	5310-00-011-6121	249D	9
24617	120388	5310-00-012-0388	273A	11
24617	120388	5310-00-012-0388	42A	14
24617	120388	5310-00-012-0388	42B	4
24617	120391	5310-00-012-0391	63	2
24617	120391	5310-00-012-0391	189G	41
24617	120391	5310-00-012-0391	205C	2
24617	120391	5310-00-012-0391	205C	12
24617	120392	5310-01-103-6042	138A	22
89346	120392	5310-01-166-8517	207B	12
24617	120393	5310-00-012-0393	230B	14
29510	120396	5310-01-244-7459	226A	3
16764	121743	5310-00-012-1743	205	27
16764	121743	5310-00-012-1743	205A	25
93334	127951	4730-00-012-7951	113	18
93334	127951	4730-00-012-7951	119	18
11862	134530	5310-01-186-7702	74	3
24617	137195	5315-00-012-0123	134	1
21450	137197	5340-01-214-3615	233	7
24617	138242	5305-00-366-3337	43	4
7X677	147500		96	7
44MG9	147818		249A	38
24617	148148	5340-00-366-0618	89	10
24617	156103	5305-01-550-5721	204B	22
24617	156966	5305-01-410-8386	203	10

CAGE	PART NUMBER	STOCK NUMBER	FIG.	ITEM
24617	156966	5305-01-410-8386	205	8
24617	156966	5305-01-410-8386	209	4
24617	156966	5305-01-410-8386	200F	14
24617	156966	5305-01-410-8386	205A	9
7X677	156971	5305-01-198-1621	201L	9
7X677	156971	5305-01-198-1621	223A	16
24617	156979	5305-01-333-5261	196G	20
24617	157125	5305-01-381-2305	215	20
7X677	157166	5305-01-185-0114	212	15
7X677	157166	5305-01-185-0114	222	3
7X677	157166	5305-01-185-0114	224	5
7X677	157166	5305-01-185-0114	210A	9
7X677	157166	5305-01-185-0114	227D	22
24617	159612	5305-01-359-0167	70	13
7X677	160046	5305-01-208-0274	264	1
24617	160052	5305-01-407-7713	264	20
24617	160052	5305-01-407-7713	227A	9
7X677	160057	5305-01-185-8647	158	4
7X677	160057	5305-01-185-8647	212	19
7X677	160057	5305-01-185-8647	265	3
24617	164403	5305-01-473-2045	228	22
24617	164403	5305-01-473-2045	228A	22
7X677	164830	5305-01-255-3588	232	43
24617	167163	5305-01-211-3786	250	4
24617	172447	5305-01-461-4400	163	19
3M915	172447	5305-01-461-4400	163A	20
34623	172482	5305-01-236-4349	100	17
34623	172482	5305-01-236-4349	100A	21
34623	172482	5305-01-236-4349	12A	16
24617	172487		266A	6
7X677	179148	5340-01-189-7640	127	2
62410	180021	5305-01-211-1405	157	13
29510	180022	5306-01-371-4685	157	14
72582	186625	5306-00-226-4826	215	9
72582	186625	5306-00-226-4826	217A	7
72582	186676	5305-01-016-5469	68	12
7X677	186965	5305-01-264-5864	51	8
24617	187838	5305-00-018-7838	80	16
24617	187838	5305-00-018-7838	223	16
24617	187838	5305-00-018-7838	223	22
24617	187838	5305-00-018-7838	266	8
24617	187838	5305-00-018-7838	223A	7
24617	187838	5305-00-018-7838	223A	10
7X677	190254	5310-01-269-9245	163	32
7X677	190254	5310-01-269-9245	163A	34

CAGE	PART NUMBER	STOCK NUMBER	FIG.	ITEM
7X677	190254	5310-01-269-9245	164A	12
7X677	190254	5310-01-269-9245	166B	24
7X677	190254	5310-01-269-9245	167T	58
7X677	190254	5310-01-269-9245	196G	18
7X677	190254	5310-01-269-9245	201L	8
39428	190254	5310-01-290-2196	266I	16
7X677	190254	5310-01-269-9245	267A	1
24617	191990	5305-01-560-3515	51A	14
7X677	193620	5320-01-218-0721	41	5
0DPV2	203400	2540-01-385-9000	228	33
0DPV2	203400	2540-01-385-9000	228A	33
0DPV2	203500	2540-01-385-9031	228	39
0DPV2	203500	2540-01-385-9031	228A	39
0DPV2	203600	2540-01-386-8790	228	34
0DPV2	203600	2540-01-386-8790	228A	34
72447	231142	5306-01-351-1744	109	7
06853	246115	4720-01-014-4915	BULK	8
06853	247042	4730-01-048-7874	29	9
24617	271153	5305-01-393-6311	29	2
24617	271153	5305-01-393-6311	99	2
24617	271153	5305-01-393-6311	126	35
24617	271153	5305-01-393-6311	127	10
24617	271153	5305-01-393-6311	117G	12
24617	271153	5305-01-393-6311	117H	11
24617	271153	5305-01-393-6311	126A	20
24617	271153	5305-01-393-6311	127A	4
24617	271153	5305-01-393-6311	39A	4
24617	271153	5305-01-393-6311	44A	23
24617	271153	5305-01-393-6311	99A	2
72582	271163	5310-01-069-5243	17	9
72582	271163	5310-01-069-5243	70	4
72582	271163	5310-01-069-5243	263	7
72582	271163	5310-01-069-5243	274B	7
24617	271166	5310-00-696-5172	51	24
34623	271166	5310-01-251-0760	60	13
34623	271166	5310-01-251-0760	196G	33
72582	271169	5310-00-124-9265	31	15
72582	271169	5310-00-124-9265	72	3
72582	271169	5310-00-124-9265	74	11
72582	271169	5310-00-124-9265	79	6
72582	271169	5310-00-124-9265	80	14
72582	271169	5310-00-124-9265	133	34
72582	271169	5310-00-124-9265	139	20
72582	271169	5310-00-124-9265	166	5
72582	271169	5310-00-124-9265	213	12

CAGE	PART NUMBER	STOCK NUMBER	FIG.	ITEM
72582	271169	5310-00-124-9265	214	10
72582	271169	5310-00-124-9265	215	19
72582	271169	5310-00-124-9265	222	4
72582	271169	5310-00-124-9265	224	10
72582	271169	5310-00-124-9265	228	43
72582	271169	5310-00-124-9265	237	21
72582	271169	5310-00-124-9265	252	10
72582	271169	5310-00-124-9265	264	18
72582	271169	5310-00-124-9265	265	14
72582	271169	5310-00-124-9265	267	12
72582	271169	5310-00-124-9265	226A	12
72582	271169	5310-00-124-9265	227A	7
72582	271169	5310-00-124-9265	227D	21
72582	271169	5310-00-124-9265	228A	42
24617	271172	5310-01-152-0598	49	18
24617	271172	5310-01-152-0598	55	7
24617	271172	5310-01-152-0598	66	34
24617	271172	5310-01-152-0598	72	7
24617	271172	5310-01-152-0598	79	17
24617	271172	5310-01-152-0598	80	3
24617	271172	5310-01-152-0598	81	8
24617	271172	5310-01-152-0598	123	6
24617	271172	5310-01-152-0598	214	9
24617	271172	5310-01-152-0598	236	19
24617	271172	5310-01-152-0598	237	29
24617	271172	5310-01-152-0598	255	11
24617	271172	5310-01-152-0598	263	3
24617	271172	5310-01-152-0598	123A	4
24617	271172	5310-01-152-0598	225G	2
24617	271172	5310-01-152-0598	227C	18
24617	271172	5310-01-152-0598	227C	31
24617	271172	5310-01-152-0598	237A	6
24617	271175	5310-01-333-5245	59	16
7X677	272474	5310-01-204-1039	69	4
7X677	272474	5310-01-204-1039	204B	26
24617	272488	5305-01-525-1329	196G	25
24617	273802	5310-01-461-8049	81	21
24617	274244	5331-00-935-9136	10	3
24617	274244	5331-00-935-9136	252	2
73342	274267	2010-00-937-5599	98	26
7X677	274707	5305-01-187-8757	51	10
7X677	274707	5305-01-187-8757	232	17
7X677	274707	5305-01-187-8757	51A	10
24617	274824	5305-00-411-9287	214	14
62380	367400	5340-01-475-3164	249A	12

CROSS REFERENCE INDEXES
PART NUMBER

CAGE	PART NUMBER	STOCK NUMBER	FIG.	ITEM
62380	367400	5340-01-475-3164	249D	13
05BU0	421157	4210-01-525-6692	266H	3
05BU0	421157	4210-01-525-6692	266I	5
05BU0	421157	4210-01-525-6692	266J	17
05BU0	421157	4210-01-525-6692	266L	10
05BU0	421696	6350-01-542-9955	266F	3
05BU0	421696	6350-01-542-9955	266I	1
05BU0	421696	6350-01-542-9955	266J	6
05BU0	421696	6350-01-542-9955	266K	5
05BU0	421696	6350-01-542-9955	266M	6
05BU0	421746	5999-01-543-3624	266I	8
05BU0	421746	5999-01-543-3624	266M	7
05BU0	421748	6150-01-542-1786	266I	7
05BU0	421749	4210-01-542-8163	266H	1
05BU0	421750	4210-01-542-8167	266I	2
05BU0	421759	5340-01-542-4809	266G	2
05BU0	421760	5340-01-542-0454	266F	5
05BU0	421761	5340-01-542-1128	266F	5
05BU0	421783	4120-01-542-1128	266I	KIT
05BU0	421881	4720-01-542-4805	266I	6
05BU0	421884	5963-01-543-3619	266G	1
05BU0	421884	5963-01-543-3619	266O	6
05BU0	421884	5963-01-543-3619	266P	5
05BU0	421902	5340-01-554-8290	266J	10
05BU0	421902	5340-01-554-8290	266L	18
05BU0	421902	5340-01-554-8290	266N	3
05BU0	421910	6150-01-542-1786	266F	1
05BU0	422034	4210-01-562-0852	266N	11
05BU0	422117	6150-01-542-1786	266K	9
05BU0	422117	6150-01-542-1786	266O	12
05BU0	422195	6150-01-563-7513	266M	8
24617	425570	5306-00-042-5570	79	15
24617	425570	5306-00-042-5570	80	20
7X677	427566	5306-00-844-0036	261	5
72582	440502	5305-01-213-9852	163A	3
72582	440502	5305-01-213-9852	164A	9
72582	442393	4730-01-457-0727	126	36
72582	442393	4730-01-457-0727	127	8
24617	442393	4730-01-457-0727	126A	23
24617	442393	4730-01-457-0727	127A	5
30379	444655	4730-00-044-4655	3	10
24617	444689	4730-00-044-4689	87	18
7X677	444782	5365-01-154-4378	3	11
24617	446363	5310-00-044-6363	164A	17
24617	448621	5305-01-473-1199	267	9

CROSS REFERENCE INDEXES
PART NUMBER

CAGE	PART NUMBER	STOCK NUMBER	FIG.	ITEM
11862	448655	5305-01-206-8401	72	26
11862	448655	5305-01-206-8401	79	20
11862	448655	5305-01-206-8401	127A	8
24617	449617	5305-01-478-3387	225F	7
24617	449617	5305-01-478-3387	225F	9
24617	449617	5305-01-478-3387	252H	7
24617	453006	5365-00-277-7341	113	5
24617	453006	5365-00-277-7341	119	5
24617	453039	5305-01-459-9564	147	6
24617	453039	5305-01-459-9564	266B	17
7X677	453571	3110-01-412-0490	94	3
72582	454065	5305-01-143-2328	228	40
72582	454065	5305-01-143-2328	228A	40
21450	454097	4730-00-911-5707	13	1
21450	454097	4730-00-911-5707	139	4
24617	454542	5305-00-499-7694	55	12
24617	454748	5310-01-038-9579	249	5
24617	454748	5310-01-038-9579	249	18
24617	454748	5310-01-038-9579	166B	16
72582	454749	5310-00-164-1790	237	8
24617	454774	5305-01-478-2767	64	2
24617	454841	5306-01-530-1592	225G	6
24617	454970	5305-00-709-8282	221C	16
7X677	454977	5306-01-192-2207	133	26
24617	455000	5306-01-360-1125	263	19
24617	455006	5306-01-360-1128	263	12
7X677	456369	5315-01-196-0277	196D	25
24617	456678	5310-00-020-0358	261	11
7X677	456702	5310-00-982-4908	260	32
24617	456931	5305-01-500-8280	79	5
24617	456931	5305-01-500-8280	133	30
24617	456958	5306-01-360-1130	273	30
7X677	477249	5330-01-154-7159	11	10
72387	491051	2590-01-571-7354	200B	2
62380	499021	5340-01-287-1979	249E	7
5A257	547898		119A	5
001Y9	600634	3020-01-491-2671	42B	9
001Y9	600635	3020-01-491-0776	273A	9
001Y9	600635	3020-01-491-0776	42A	12
001Y9	600636	3020-01-491-2659	42B	6
001Y9	600637	2920-01-491-2011	273A	14
001Y9	600637	2920-01-491-2011	42A	18
001Y9	600638	5340-01-491-2205	273A	10
001Y9	600638	5340-01-491-2205	42A	13
001Y9	600639	5310-01-490-7461	42B	10

CROSS REFERENCE INDEXES
PART NUMBER

CAGE	PART NUMBER	STOCK NUMBER	FIG.	ITEM
001Y9	600641	5310-21-921-5930	42B	11
97271	606279	2520-01-498-9104	116	4
7X677	682653	5325-01-205-5966	102	11
47NR0	817549	4730-01-568-7803	12A	11
47NR0	818839	4730-01-568-8808	12A	10
7X677	838538	5340-00-449-6408	3	16
19207	900529	3110-00-108-9247	260	53
7X677	930679	2520-01-149-1221	90	2
6W728	1000050	5360-01-513-4390	199	2
6W728	1000074		229	2
6W728	1000081	5970-01-523-3417	273	9
6W728	1000081	5970-01-523-3417	273A	1
6W728	1000226	2510-01-434-6191	207	1
6W728	1000323	2510-01-520-7145	201A	5
6W728	1000323	2510-01-520-7145	201C	8
6W728	1000331	2540-01-434-6620	170	4
6W728	1000332	2540-01-434-6619	170	4
6W728	1000368	5330-01-519-7016	196	16
6W728	1000369	5330-01-519-7009	196	17
6W728	1000370	5330-01-519-7029	196	15
6W728	1000410	5340-01-549-5729	200D	2
6W728	1000414	5340-01-550-2511	197A	20
6W728	1000414	5340-01-550-2511	200D	6
6W728	1000430		205	38
6W728	1000431		205	37
6W728	1000531		249J	KIT
6W728	1000545	5340-01-517-4192	199A	1
6W728	1000545	5340-01-517-4192	200C	16
32498	1310055	2920-01-175-7214	62	2
62826	1400270		110	2
62826	1400270		115	2
62826	1400271		110	4
62826	1400271		115	4
34623	1494255	5310-01-513-1935	163	31
34623	1494255	5310-01-513-1935	163A	32
45152	1507170	5305-00-958-5471	200E	12
45152	1507170	5305-00-958-5471	201J	3
45152	1507170	5305-00-958-5471	201K	36
45152	1507170	5305-00-958-5471	201O	3
7X677	1567442	5310-01-021-9027	131	14
7X677	1567442	5310-01-021-9027	131A	8
7X677	1635490	5306-01-149-6280	39	16
7X677	1635490	5306-01-149-6280	39A	19
80064	1755683	5935-00-605-9322	76	17
7X677	2065616	5310-01-187-3485	152	2

CAGE	PART NUMBER	STOCK NUMBER	FIG.	ITEM
62826	2090003		110	6
62826	2090004		110	5
62826	2090004		115	5
0GE52	2227346	5340-01-456-2751	128	3
0GE52	2227677	5340-01-458-6386	128	2
0GE52	2228633	2530-01-459-5890	128	4
62826	2290033		110	7
62826	2290033		115	7
62826	2390036		110	10
62826	2390074		115	12
62826	2390076		110	11
62826	2390085		110	12
62826	2390086		KITS	14
24617	2436161	5310-01-102-3270	12	6
24617	2436161	5310-01-102-3270	27	18
24617	2436161	5310-01-102-3270	28	2
24617	2436161	5310-01-102-3270	29	12
24617	2436161	5310-01-102-3270	33	2
24617	2436161	5310-01-102-3270	37	11
24617	2436161	5310-01-102-3270	40	4
24617	2436161	5310-01-102-3270	51	25
34623	2436161	5310-01-102-3270	65	13
24617	2436161	5310-01-102-3270	83	3
24617	2436161	5310-01-102-3270	84	6
24617	2436161	5310-01-102-3270	100	14
24617	2436161	5310-01-102-3270	121	2
24617	2436161	5310-01-102-3270	123	13
24617	2436161	5310-01-102-3270	133	28
24617	2436161	5310-01-102-3270	140	21
24617	2436161	5310-01-102-3270	157	20
24617	2436161	5310-01-102-3270	160	27
24617	2436161	5310-01-102-3270	161	6
24617	2436161	5310-01-102-3270	201	6
24617	2436161	5310-01-102-3270	205	11
24617	2436161	5310-01-102-3270	208	32
24617	2436161	5310-01-102-3270	223	3
24617	2436161	5310-01-102-3270	223	8
24617	2436161	5310-01-102-3270	232	2
24617	2436161	5310-01-102-3270	233	9
24617	2436161	5310-01-102-3270	235	3
24617	2436161	5310-01-102-3270	250	8
24617	2436161	5310-01-102-3270	251	14
24617	2436161	5310-01-102-3270	252	12
24617	2436161	5310-01-102-3270	263	9
24617	2436161	5310-01-102-3270	100A	7

CROSS REFERENCE INDEXES
PART NUMBER

CAGE	PART NUMBER	STOCK NUMBER	FIG.	ITEM
24617	2436161	5310-01-102-3270	117B	6
24617	2436161	5310-01-102-3270	117F	5
24617	2436161	5310-01-102-3270	117G	8
24617	2436161	5310-01-102-3270	117H	7
24617	2436161	5310-01-102-3270	123A	3
24617	2436161	5310-01-102-3270	126A	10
34623	2436161	5310-01-102-3270	12A	4
24617	2436161	5310-01-102-3270	166B	9
24617	2436161	5310-01-102-3270	166B	27
24617	2436161	5310-01-102-3270	167G	3
24617	2436161	5310-01-102-3270	167H	8
24617	2436161	5310-01-102-3270	167H	21
24617	2436161	5310-01-102-3270	167I	8
24617	2436161	5310-01-102-3270	167K	3
24617	2436161	5310-01-102-3270	167T	9
24617	2436161	5310-01-102-3270	167T	41
24617	2436161	5310-01-102-3270	167U	20
24617	2436161	5310-01-102-3270	169J	9
24617	2436161	5310-01-102-3270	169J	39
24617	2436161	5310-01-102-3270	170A	12
24617	2436161	5310-01-102-3270	170A	24
24617	2436161	5310-01-102-3270	189B	26
24617	2436161	5310-01-102-3270	189G	4
24617	2436161	5310-01-102-3270	196C	2
24617	2436161	5310-01-102-3270	196C	30
24617	2436161	5310-01-102-3270	196D	22
24617	2436161	5310-01-102-3270	196G	6
24617	2436161	5310-01-102-3270	200E	17
24617	2436161	5310-01-102-3270	200F	6
24617	2436161	5310-01-102-3270	200H	8
24617	2436161	5310-01-102-3270	200H	29
24617	2436161	5310-01-102-3270	200H	34
24617	2436161	5310-01-102-3270	201G	3
34623	2436161	5310-01-102-3270	201K	17
24617	2436161	5310-01-102-3270	201K	34
24617	2436161	5310-01-102-3270	201M	6
24617	2436161	5310-01-102-3270	201M	14
24617	2436161	5310-01-102-3270	201N	4
24617	2436161	5310-01-102-3270	202D	9
24617	2436161	5310-01-102-3270	204A	8
24617	2436161	5310-01-102-3270	204B	8
24617	2436161	5310-01-102-3270	204B	25
24617	2436161	5310-01-102-3270	205A	23
24617	2436161	5310-01-102-3270	205B	6
24617	2436161	5310-01-102-3270	207A	2

CROSS REFERENCE INDEXES
PART NUMBER

CAGE	PART NUMBER	STOCK NUMBER	FIG.	ITEM
24617	2436161	5310-01-102-3270	207B	28
24617	2436161	5310-01-102-3270	209C	3
24617	2436161	5310-01-102-3270	223A	2
24617	2436161	5310-01-102-3270	225G	3
24617	2436161	5310-01-102-3270	225K	3
24617	2436161	5310-01-102-3270	235A	4
24617	2436161	5310-01-102-3270	288A	5
24617	2436161	5310-01-102-3270	38A	7
24617	2436161	5310-01-102-3270	40A	8
24617	2436161	5310-01-102-3270	51A	26
24617	2436162	5310-01-119-1024	80	6
24617	2436162	5310-01-119-1024	126	5
24617	2436162	5310-01-119-1024	129	4
24617	2436162	5310-01-119-1024	133	32
24617	2436162	5310-01-119-1024	204	11
24617	2436162	5310-01-119-1024	204	28
24617	2436162	5310-01-119-1024	208	2
24617	2436162	5310-01-119-1024	212	3
24617	2436162	5310-01-119-1024	215	4
24617	2436162	5310-01-119-1024	215	12
24617	2436162	5310-01-119-1024	216	5
24617	2436162	5310-01-119-1024	220	5
24617	2436162	5310-01-119-1024	233	23
24617	2436162	5310-01-119-1024	236	2
24617	2436162	5310-01-119-1024	237	5
24617	2436162	5310-01-119-1024	248	8
24617	2436162	5310-01-119-1024	262	2
24617	2436162	5310-01-119-1024	123A	16
24617	2436162	5310-01-119-1024	126A	18
24617	2436162	5310-01-119-1024	138C	2
24617	2436162	5310-01-119-1024	142A	7
24617	2436162	5310-01-119-1024	163A	27
24617	2436162	5310-01-119-1024	164A	14
24617	2436162	5310-01-119-1024	167C	4
24617	2436162	5310-01-119-1024	167F	15
24617	2436162	5310-01-119-1024	167G	10
24617	2436162	5310-01-119-1024	167H	18
24617	2436162	5310-01-119-1024	167I	15
24617	2436162	5310-01-119-1024	167T	4
24617	2436162	5310-01-119-1024	167T	14
24617	2436162	5310-01-119-1024	167T	23
24617	2436162	5310-01-119-1024	167U	13
24617	2436162	5310-01-119-1024	167V	2
24617	2436162	5310-01-119-1024	169J	2
24617	2436162	5310-01-119-1024	169J	14

CROSS REFERENCE INDEXES
PART NUMBER

CAGE	PART NUMBER	STOCK NUMBER	FIG.	ITEM
24617	2436162	5310-01-119-1024	189E	10
24617	2436162	5310-01-119-1024	189M	14
24617	2436162	5310-01-119-1024	195D	2
24617	2436162	5310-01-119-1024	196D	6
24617	2436162	5310-01-119-1024	201K	42
24617	2436162	5310-01-119-1024	201L	30
24617	2436162	5310-01-119-1024	201O	9
24617	2436162	5310-01-119-1024	202E	2
24617	2436162	5310-01-119-1024	207B	49
24617	2436162	5310-01-119-1024	217A	5
24617	2436162	5310-01-119-1024	265E	4
24617	2436162	5310-01-119-1024	266A	7
24617	2436162	5310-01-119-1024	266B	11
24617	2436162	5310-01-119-1024	266O	2
24617	2436163	5310-01-412-4013	28	25
24617	2436163	5310-01-412-4013	35	7
24617	2436163	5310-01-412-4013	35	35
24617	2436163	5310-01-412-4013	36	6
24617	2436163	5310-01-412-4013	39	4
24617	2436163	5310-01-412-4013	45	11
24617	2436163	5310-01-412-4013	48	8
24617	2436163	5310-01-412-4013	87	14
24617	2436163	5310-01-412-4013	106	2
24617	2436163	5310-01-412-4013	114	5
24617	2436163	5310-01-412-4013	120	5
24617	2436163	5310-01-412-4013	162	2
24617	2436163	5310-01-412-4013	163	37
24617	2436163	5310-01-412-4013	164	22
24617	2436163	5310-01-412-4013	204	18
24617	2436163	5310-01-412-4013	206	15
24617	2436163	5310-01-412-4013	232	28
24617	2436163	5310-01-412-4013	235	13
24617	2436163	5310-01-412-4013	250	15
24617	2436163	5310-01-412-4013	253	22
24617	2436163	5310-01-412-4013	265	7
24617	2436163	5310-01-412-4013	103A	8
24617	2436163	5310-01-412-4013	123A	8
24617	2436163	5310-01-412-4013	126A	21
24617	2436163	5310-01-412-4013	127A	3
24617	2436163	5310-01-412-4013	128A	11
24617	2436163	5310-01-412-4013	12A	14
24617	2436163	5310-01-412-4013	143A	2
24617	2436163	5310-01-412-4013	150A	10
24617	2436163	5310-01-412-4013	166B	29
24617	2436163	5310-01-412-4013	167F	7

CROSS REFERENCE INDEXES
PART NUMBER

CAGE	PART NUMBER	STOCK NUMBER	FIG.	ITEM
24617	2436163	5310-01-412-4013	167G	6
24617	2436163	5310-01-412-4013	167H	4
24617	2436163	5310-01-412-4013	167I	23
24617	2436163	5310-01-412-4013	167T	17
24617	2436163	5310-01-412-4013	167T	45
24617	2436163	5310-01-412-4013	167U	2
24617	2436163	5310-01-412-4013	169J	43
24617	2436163	5310-01-412-4013	189A	5
24617	2436163	5310-01-412-4013	189B	3
24617	2436163	5310-01-412-4013	189C	3
24617	2436163	5310-01-412-4013	189D	3
24617	2436163	5310-01-412-4013	189I	8
24617	2436163	5310-01-412-4013	189J	3
24617	2436163	5310-01-412-4013	189K	3
24617	2436163	5310-01-412-4013	189L	6
24617	2436163	5310-01-412-4013	189Q	2
24617	2436163	5310-01-412-4013	196G	31
24617	2436163	5310-01-412-4013	200A	2
24617	2436163	5310-01-412-4013	200B	9
24617	2436163	5310-01-412-4013	200C	4
24617	2436163	5310-01-412-4013	200D	11
24617	2436163	5310-01-412-4013	200E	11
24617	2436163	5310-01-412-4013	200E	26
24617	2436163	5310-01-412-4013	200F	24
24617	2436163	5310-01-412-4013	200G	1
24617	2436163	5310-01-412-4013	200H	3
24617	2436163	5310-01-412-4013	200H	14
24617	2436163	5310-01-412-4013	201D	4
24617	2436163	5310-01-412-4013	201F	2
24617	2436163	5310-01-412-4013	201G	18
24617	2436163	5310-01-412-4013	201I	5
24617	2436163	5310-01-412-4013	201J	12
24617	2436163	5310-01-412-4013	201M	2
24617	2436163	5310-01-412-4013	202A	10
24617	2436163	5310-01-412-4013	202B	4
24617	2436163	5310-01-412-4013	202C	2
24617	2436163	5310-01-412-4013	202D	3
24617	2436163	5310-01-412-4013	225A	12
24617	2436163	5310-01-412-4013	235A	13
24617	2436163	5310-01-412-4013	266B	2
24617	2436163	5310-01-412-4013	266C	2
24617	2436163	5310-01-412-4013	266L	13
24617	2436163	5310-01-412-4013	273A	3
24617	2436163	5310-01-412-4013	38A	10
24617	2436163	5310-01-412-4013	39A	5

CROSS REFERENCE INDEXES
PART NUMBER

CAGE	PART NUMBER	STOCK NUMBER	FIG.	ITEM
24617	2436163	5310-01-412-4013	42A	15
24617	2436163	5310-01-412-4013	42B	3
24617	2436163	5310-01-412-4013	44A	26
24617	2436163	5310-01-412-4013	45A	2
34623	2436164	5310-01-278-9555	108	4
34623	2436164	5310-01-278-9555	125A	7
34623	2436164	5310-01-278-9555	125B	11
34623	2436164	5310-01-278-9555	207A	17
34623	2436164	5310-01-278-9555	207B	36
34623	2436164	5310-01-278-9555	220A	18
34623	2436164	5310-01-278-9555	221B	4
34623	2436164	5310-01-278-9555	221C	13
24617	2436165	5310-01-121-1703	2	9
24617	2436165	5310-01-121-1703	36	13
24617	2436165	5310-01-121-1703	111	2
24617	2436165	5310-01-121-1703	116	2
24617	2436165	5310-01-121-1703	134	21
24617	2436165	5310-01-121-1703	142	11
24617	2436165	5310-01-121-1703	143	3
24617	2436165	5310-01-121-1703	145	1
24617	2436165	5310-01-121-1703	148	4
24617	2436165	5310-01-121-1703	149	2
24617	2436165	5310-01-121-1703	153	1
24617	2436165	5310-01-121-1703	207	17
24617	2436165	5310-01-121-1703	207	29
24617	2436165	5310-01-121-1703	253	3
24617	2436165	5310-01-121-1703	257	11
24617	2436165	5310-01-121-1703	116A	4
24617	2436165	5310-01-121-1703	116A	15
24617	2436165	5310-01-121-1703	141A	7
24617	2436165	5310-01-121-1703	142A	11
24617	2436165	5310-01-121-1703	143A	7
24617	2436165	5310-01-121-1703	144A	3
24617	2436165	5310-01-121-1703	150A	16
24617	2436165	5310-01-121-1703	167F	2
24617	2436165	5310-01-121-1703	167U	23
24617	2436165	5310-01-121-1703	170A	16
24617	2436165	5310-01-121-1703	200H	11
24617	2436165	5310-01-121-1703	201K	10
24617	2436165	5310-01-121-1703	265B	2
24617	2436165	5310-01-121-1703	265D	6
24617	2436165	5310-01-121-1703	266A	2
24617	2436165	5310-01-121-1703	38A	2
24617	2436167	5310-01-151-7347	111	7
24617	2436167	5310-01-151-7347	116	7

CROSS REFERENCE INDEXES
PART NUMBER

CAGE	PART NUMBER	STOCK NUMBER	FIG.	ITEM
24617	2436167	5310-01-151-7347	134	19
24617	2436167	5310-01-151-7347	148	5
24617	2436167	5310-01-151-7347	149	23
24617	2436167	5310-01-151-7347	154	11
24617	2436167	5310-01-151-7347	155	2
24617	2436167	5310-01-151-7347	116A	16
24617	2436167	5310-01-151-7347	125A	18
24617	2436167	5310-01-151-7347	12A	21
24617	2436167	5310-01-151-7347	135A	2
24617	2436167	5310-01-151-7347	141A	16
24617	2436167	5310-01-151-7347	155A	2
24617	2436167	5310-01-151-7347	201G	12
0BHP2	2591466	4810-01-488-6225	117F	8
78222	2596924	2530-01-565-7606	134	6
96214	5/20/9115	5925-00-803-4424	283	3
53867	2770827	5310-01-565-7569	128A	8
62826	2790024		110	9
62826	2790026		110	9
62826	2790028		115	9
62826	2890019		110	3
62826	2890019		115	3
86403	2892399	6680-00-269-0335	267	20
22787	Oct-58	5310-00-190-0752	22	8
62826	2990054	2530-01-459-9493	KITS	35
62826	2990055	2530-01-459-9494	KITS	36
62826	2990056	2530-01-459-9495	KITS	37
00198	3001564	5310-00-841-1131	22	1
46156	3440335	5315-01-188-4490	212	37
46156	3440335	5315-01-188-4490	210A	19
7X677	3701679	5315-01-149-5433	4	7
7X677	3702366	2805-00-336-1716	11	15
7X677	3704871	5340-01-194-5294	11	14
7X677	3719599	2910-00-493-2138	19	3
7X677	3727207	5306-01-148-8198	5	2
7X677	3739798	4730-01-182-6565	41	6
7X677	3787240	2520-01-159-7757	102	39
15434	3802287	2920-01-420-7894	42	14
15434	3802287	2920-01-420-7894	273	29
7X677	3816659	5340-01-149-4434	251	9
0CTH1	3921935	5330-01-233-2848	24	42
0CTH1	3921936	5331-01-232-2145	22	11
0CTH1	3921937	5331-01-236-0476	24	26
0CTH1	3921939	5331-01-232-7886	23	38
0CTH1	3921940	5331-01-236-0472	23	35
0CTH1	3921950	5330-01-234-2615	22	26

CROSS REFERENCE INDEXES
PART NUMBER

CAGE	PART NUMBER	STOCK NUMBER	FIG.	ITEM
7X677	3947770	2805-00-155-7266	7	6
7X677	3999200	5340-01-149-7977	3	12
0VL44	4108959	9515-01-548-9680	287A	5
82978	4167924	5310-01-174-8091	102	36
6W728	4397079	5340-01-440-1428	181	20
0VL44	4526529	4130-01-539-6297	276G	3
6W728	4660101	2590-01-435-1337	197	1
6W728	4660110	5330-01-434-2837	197	4
6W728	4660111	5340-01-433-9279	235	4
6W728	4660112	5340-01-441-1727	219	6
6W728	4660113	2510-01-435-1323	198	1
6W728	4660116	5340-01-434-2863	198	6
6W728	4660118	5365-01-434-0854	198	7
6W728	4660120	5330-01-434-2838	198	11
6W728	4660121	2590-01-434-5234	198	23
6W728	4660122	5310-01-434-7259	196	11
6W728	4660123	2540-01-435-0473	196	10
6W728	4660127	5340-01-434-8632	196	6
6W728	4660128	3040-01-560-2688	196	8
6W728	4660129	3040-01-434-3901	196	8
6W728	4660131	5340-01-434-2870	197	6
6W728	4660132	2540-01-435-0469	198	13
6W728	4660135	2590-01-435-1331	197	11
6W728	4660140	5340-01-434-8634	199	3
6W728	4660145	5365-01-434-0853	199	6
6W728	4660147	5340-01-434-2839	197	17
6W728	4660148	5340-01-434-2869	197	6
6W728	4660149	3110-01-442-2421	198	14
6W728	4660150	5340-01-434-2840	196	3
6W728	4660151	5365-01-434-0855	197	12
6W728	4660200	2510-01-435-9693	211	7
6W728	4660201	2510-01-435-9690	211	7
6W728	4660202	2510-01-435-9692	170	15
6W728	4660310	2540-01-435-1329	169	10
6W728	4660311	2540-01-435-1306	169	10
6W728	4660312	2540-01-434-6623	180	9
6W728	4660313	5340-01-434-1375	202	13
6W728	4660315	5340-01-435-3805	198	19
6W728	4660325	2540-01-435-6487	192	1
6W728	4660326	2540-01-435-6485	193	19
6W728	4660327	2540-01-435-6307	192	8
6W728	4660330	2540-01-434-5236	193	3
6W728	4660331	2540-01-434-5237	192	6
6W728	4660334	2540-01-445-5929	179	2
6W728	4660335	2540-01-444-6368	179	2

CROSS REFERENCE INDEXES
PART NUMBER

CAGE	PART NUMBER	STOCK NUMBER	FIG.	ITEM
6W728	4660404	5340-01-434-2861	179	9
6W728	4660405	2540-01-435-0466	180	4
6W728	4660406	2540-01-435-0464	202	9
6W728	4660407	2540-01-435-0462	202	9
6W728	4660408	2540-01-435-1054	172	3
6W728	4660412	2540-01-435-1058	171	18
6W728	4660412	2540-01-435-1058	188L	2
6W728	4660416	5340-01-434-2841	171	2
6W728	4660417	5365-01-438-2406	171	1
6W728	4660418	5340-01-434-2842	180	11
6W728	4660420	2540-01-435-1061	188	10
6W728	4660421	2540-01-435-0570	189	10
6W728	4660422	2540-01-435-0455	188	15
6W728	4660423	2540-01-435-0981	189	7
6W728	4660424	2540-01-435-0573	188	16
6W728	4660429	2540-01-435-0470	182	2
6W728	4660430	2540-01-435-0984	182	2
6W728	4660440	2540-01-435-6303	180	1
6W728	4660441	2540-01-435-6299	180	1
6W728	4660443	2540-01-435-7211	189	9
6W728	4660450		176	2
6W728	4660452		175	12
6W728	4660454		188	9
6W728	4660455	2540-01-542-9650	189	14
6W728	4660456		176	7
6W728	4660457		173	14
6W728	4660458		188	3
6W728	4660459	2540-01-543-3219	189	3
6W728	4660460		188	8
6W728	4660461		188	6
6W728	4660462		177	1
6W728	4660463	5365-01-548-2610	173	15
6W728	4660464	2540-01-443-6459	175	1
6W728	4660465	5365-01-436-2533	176	10
6W728	4660466	5365-01-436-2535	176	3
6W728	4660500	5340-01-434-2843	209	2
6W728	4660508	5340-01-435-3806	182	11
6W728	4660520	5340-01-433-9281	183	23
6W728	4660520	5340-01-433-9281	189G	34
6W728	4660521	2540-01-434-5243	183	4
6W728	4660522	5340-01-435-2844	183	4
6W728	4660523	5365-01-434-0104	183	2
6W728	4660523	5365-01-434-0104	189G	20
6W728	4660525	5365-01-434-0856	182	14
6W728	4660525	5365-01-434-0856	183	25

CROSS REFERENCE INDEXES
PART NUMBER

CAGE	PART NUMBER	STOCK NUMBER	FIG.	ITEM
6W728	4660527	5340-01-435-2845	209	15
6W728	4660530	5340-01-433-6115	181	14
6W728	4660540	2590-01-434-5240	181	7
6W728	4660541	2590-01-434-5239	181	6
6W728	4660542	2590-01-434-5241	181	2
6W728	4660543	5340-01-434-2844	196	20
6W728	4660543	5340-01-434-2844	197A	5
6W728	4660544	5310-01-434-1377	183	19
6W728	4660557	2540-01-434-5242	181	9
6W728	4660560	2540-01-434-5244	181	12
6W728	4660561	5365-01-434-0105	182	6
6W728	4660562	5365-01-434-0107	182	3
6W728	4660563	2590-01-434-5151	182	6
6W728	4660564	2590-01-434-5152	182	3
6W728	4660565	2540-01-434-6624	182	7
6W728	4660566	2540-01-435-0082	181	8
6W728	4660700	2510-01-434-5245	200	6
6W728	4660708	2590-01-434-5246	211	4
6W728	4660711	4710-01-434-6627	183	5
6W728	4660716	5340-01-433-6116	235	5
6W728	4660717	5340-01-433-6117	235	5
6W728	4660721	3990-01-451-4203	203	1
6W728	4660728	4210-01-435-0289	209	10
6W728	4660730	2540-01-435-0579	201	11
6W728	4660731	5340-01-434-2845	200	29
6W728	4660736	5340-01-432-4426	219	9
6W728	4660737	5340-01-432-4471	25	34
6W728	4660738	2590-01-434-5153	25	28
6W728	4660740	5340-01-433-8421	219	2
6W728	4660800	2510-01-434-6626	202	1
6W728	4660803	2540-01-435-0578	181	17
6W728	4660811	5310-01-433-6377	192	17
6W728	4660811	5310-01-433-6377	193	13
6W728	4660812	5340-01-433-8422	185	14
6W728	4660813	5340-01-433-8426	185	11
6W728	4660841	5340-01-433-8424	200	33
6W728	4660842	5340-01-433-8425	200	31
6W728	4660843	2540-01-434-3995	186	1
6W728	4660846	2540-01-443-6467	210	20
6W728	4660847	2540-01-443-6469	210	20
6W728	4660848	2540-01-433-8133	211	3
6W728	4660849	2540-01-433-8132	211	3
6W728	4660850	5340-01-433-8428	200	33
6W728	4660851	2510-01-435-9689	167	1
6W728	4660852	2510-01-435-9695	167A	1

CAGE	PART NUMBER	STOCK NUMBER	FIG.	ITEM
6W728	4660853	2510-01-435-9694	167	1
6W728	4660854	2510-01-435-9691	167A	1
6W728	4660861	2540-01-434-5149	170	4
6W728	4660863	2540-01-434-5150	170	4
6W728	4660865	2540-01-436-0770	179	1
6W728	4660866	2540-01-435-7696	179	1
6W728	4660869	5365-01-436-1230	173	16
6W728	4660869	5365-01-436-1230	174	4
6W728	4660869	5365-01-436-1230	175	15
6W728	4660869	5365-01-436-1230	176	4
6W728	4660869	5365-01-436-1230	195B	3
6W728	4660869	5365-01-436-1230	195C	9
6W728	4660870	5340-01-436-4352	188	12
6W728	4660870	5340-01-436-4352	189	13
6W728	4660871	5340-01-440-1351	160	26
6W728	4660884	2510-01-434-9330	167	6
6W728	4660884	2510-01-434-9330	167A	6
6W728	4660895	3040-01-435-1358	168	3
6W728	4660896	3040-01-434-0720	168	13
6W728	4660897	3040-01-435-1374	168	3
6W728	4660898	3040-01-475-9145	168	13
6W728	4660900	5330-01-435-4753	168	4
6W728	4660901	5330-01-435-4752	168	12
6W728	4660902	5330-01-435-9113	168	12
6W728	4660904	5342-01-435-3788	169	13
6W728	4660905	5342-01-435-3787	169	13
6W728	4660906	5340-01-435-3791	169	23
6W728	4660907	5340-01-435-3790	169	23
6W728	4660909	5340-01-440-3804	183	16
6W728	4660910	5340-01-436-4349	183	16
6W728	4660912	5340-01-435-3789	169	16
6W728	4660914	5340-01-436-4350	179	6
6W728	4660915	5365-01-436-1232	179	8
6W728	4660922	2540-01-436-0720	190	1
6W728	4660928	2510-01-436-0773	167	19
6W728	4660928	2510-01-436-0773	167C	10
6W728	4660929	2510-01-547-7168	185	8
6W728	4660936	2540-01-434-9380	169	20
6W728	4660937	2540-01-434-9382	169	20
6W728	4660938	2540-01-434-9532	169	20
6W728	4660939	2540-01-434-9639	169	20
6W728	4660941	5340-01-435-3792	168	11
6W728	4660943	2510-01-436-0772	167	19
6W728	4660943	2510-01-436-0772	167C	10
6W728	4660944	3040-01-436-0894	169	25

CAGE	PART NUMBER	STOCK NUMBER	FIG.	ITEM
6W728	4660945	5340-01-436-4351	183	13
6W728	4660945	5340-01-436-4351	276C	9
6W728	4660946	2590-01-435-0078	167	10
6W728	4660947	5340-01-432-8591	167A	10
6W728	4660948	5340-01-432-8594	167	10
6W728	4660949	5340-01-432-8592	167A	10
6W728	4660951	2540-01-435-7698	185	4
6W728	4660952	3040-01-436-0897	169	25
6W728	4660957	5365-01-436-1233	194	10
6W728	4660957	5365-01-436-1233	195	10
6W728	4660962	2590-01-438-5739	201	13
6W728	4660964	5340-01-440-1441	200	25
6W728	4660965	5340-01-440-1442	200	25
6W728	4662276	2510-01-520-7135	201A	1
6W728	4662276	2510-01-520-7135	201C	1
6W728	4662430	3020-01-563-2245	265I	1
6W728	4668202	5340-01-419-5186	210	12
6W728	4668205	5340-01-419-5187	210	12
6W728	4668217	2540-01-418-4070	230	19
6W728	4668217	2540-01-418-4070	230	21
6W728	4668219	5340-01-446-7449	210	11
6W728	4668219	5340-01-446-7449	167O	5
6W728	4668243	2540-01-436-4236	186	6
6W728	4668243	2540-01-436-4236	228	23
6W728	4668245	5340-01-417-6474	167	16
6W728	4668245	5340-01-417-6474	210	16
6W728	4668245	5340-01-417-6474	167C	2
6W728	4668245	5340-01-417-6474	167O	11
6W728	4668246	5340-01-419-1275	167A	16
6W728	4668264	2540-01-419-6300	210	2
6W728	4668273	5310-01-436-5685	171	5
6W728	4668303	5340-01-436-4353	192	20
6W728	4668303	5340-01-436-4353	193	10
6W728	4668314	5340-01-420-8730	192	5
6W728	4668314	5340-01-420-8730	193	2
6W728	4668345	2540-01-419-1595	33	22
6W728	4668359	5340-01-433-8442	192	15
6W728	4668359	5340-01-433-8442	193	15
6W728	4668359	5340-01-433-8442	194	4
6W728	4668359	5340-01-433-8442	195	18
6W728	4668367	2040-01-506-4413	BULK	35
6W728	4668368	2590-01-506-4930	BULK	36
6W728	4668502	2540-01-420-3822	185	1
6W728	4668503	5340-01-417-6475	219	11
6W728	4668504	5340-01-417-6480	219	11

CAGE	PART NUMBER	STOCK NUMBER	FIG.	ITEM
6W728	4668506	2510-01-420-3026	167A	19
6W728	4668507	2540-01-420-3823	184	1
6W728	4668515	5365-01-417-9849	170	6
6W728	4668516	5340-01-422-4255	169	11
6W728	4668517	2540-01-420-3824	184	4
6W728	4668518	2510-01-420-1884	210	1
6W728	4668520	2510-01-418-1924	167A	19
6W728	4668561	2540-01-419-6298	211	2
6W728	4668563	2530-01-420-1883	186	7
6W728	4668570	5340-01-419-5190	187	3
6W728	4668571	5340-01-419-5189	187	3
6W728	4668595	3040-01-420-7875	169	26
6W728	4668596	5340-01-419-5185	169	30
6W728	4668619	2540-01-419-7051	170	22
6W728	4668621	5365-01-433-3989	200	26
6W728	4668625	2540-01-417-9981	170	8
6W728	4668626	5340-01-419-2314	169	26
6W728	4668633	5340-01-417-8996	170	18
6W728	4668639	2540-01-418-6825	170	20
6W728	4668639	2540-01-418-6825	169E	25
6W728	4668646	5340-01-438-4498	219	15
6W728	4668655	3040-01-418-9500	170	17
6W728	4668657	5365-01-435-8425	169	5
6W728	4668659	5325-01-417-7789	169	7
6W728	4668661	5340-01-420-8714	210	9
6W728	4668918	5330-01-419-4425	168	7
6W728	4668923		BULK	24
6W728	4668950	5340-01-419-1255	181	16
6W728	4668955	5340-01-419-1331	169E	11
6W728	4668958	5365-01-417-7792	183	3
6W728	4668962	5330-01-436-5553	BULK	26
6W728	4668973	7690-01-418-1640	238	21
6W728	4668988	5340-01-456-3917	192	19
6W728	4668988	5340-01-456-3917	193	11
6W728	4668988	5340-01-456-3917	194	1
6W728	4668988	5340-01-456-3917	195	6
6W728	4668988	5340-01-456-3917	189C	15
36540	5044121	4730-01-251-9373	117	29
19205	5140237	5305-00-514-0237	266D	11
19207	5226154	5325-00-174-9829	108	10
19207	5226154	5325-00-174-9829	108	21
19207	5226154	5325-00-174-9829	109	6
7X677	5234530	2815-01-147-9358	7	16
19207	5294507	5310-00-350-2655	60	6
77060	5297084	2590-00-695-9076	249B	19

CAGE	PART NUMBER	STOCK NUMBER	FIG.	ITEM
19207	5310615	5310-00-463-0268	59	12
19207	5381088	5930-00-130-5349	51	18
19207	5381088	5930-00-130-5349	51A	21
19207	5381233	5310-00-832-6852	51	15
19207	5381233	5310-00-832-6852	51A	18
34623	5550554	5310-01-144-2779	136	19
34623	5568211	5307-01-196-4937	113	24
34623	5568211	5307-01-196-4937	119	24
34623	5568228	3110-00-411-5937	113	3
34623	5568228	3110-00-411-5937	119	3
34623	5569268	5365-01-186-1294	155	10
34623	5569460	5340-01-189-6748	33	15
34623	5573684	5310-01-174-8607	113	28
34623	5573684	5310-01-174-8607	119	28
34623	5573688	5310-01-231-0596	119	6
34623	5573690	5365-01-177-5720	113	34
34623	5573690	5365-01-177-5720	119	34
34623	5573692	5330-01-176-0825	113	12
34623	5573692	5330-01-176-0825	119	12
34623	5573989	5365-01-174-8186	113	4
34623	5573989	5365-01-174-8186	119	4
34623	5574002	5340-01-174-8493	113	13
34623	5574002	5340-01-174-8493	119	13
34623	5574872	4710-01-188-6050	28	7
34623	5574924	5340-01-174-2271	113	32
34623	5574924	5340-01-174-2271	119	32
34623	5575752	5340-01-185-8724	208A	7
96139	5577626	5995-01-184-2228	73	1
34623	5578017	5306-01-190-5760	108	2
34623	5578215		73	2
34623	5578414	5340-01-186-7229	163	22
34623	5578418	5306-01-186-7129	163	20
34623	5578522	5340-01-186-9496	162	3
34623	5578604	4710-01-188-0028	40	10
34623	5578635	3110-01-189-9980	33	23
34623	5578742	5360-01-186-3737	33	26
34623	5578749	2510-01-196-5311	161	4
34623	5578764	5315-01-185-7421	33	28
34623	5578794	3120-01-186-7181	125	4
34623	5578802	2530-00-340-1405	124	9
34623	5578802	2530-00-340-1405	125	5
34623	5578910		27	14
34623	5579257	5340-01-203-8675	166A	17
34623	5579257	5340-01-203-8675	167B	17
34623	5579257	5340-01-203-8675	196G	12

CAGE	PART NUMBER	STOCK NUMBER	FIG.	ITEM
34623	5579424	3040-01-174-9130	117	1
34623	5579426		117	4
34623	5579436		117	21
34623	5579442	5310-01-175-0617	117	9
34623	5579445	5365-01-175-3593	KITS	45
34623	5579450	5365-01-180-2585	117	5
34623	5579453	5365-01-174-8174	KITS	46
34623	5579485	2510-01-188-3228	162	28
34623	5579620	2510-01-189-0891	143	7
34623	5579621	2510-01-187-7031	143	7
34623	5579658	5325-01-214-5007	228	21
34623	5579658	5325-01-214-5007	228A	21
34623	5579894	4710-01-192-9546	204	37
34623	5579895	4710-01-192-7965	204	31
34623	5579941	5365-01-211-5063	60	12
34623	5581163	5330-01-252-5378	158	60
34623	5581213		158	23
34623	5581260	2590-01-188-3225	210A	32
34623	5581319	2540-01-203-7721	227C	21
34623	5581320	2540-01-200-1994	249	20
34623	5581320	2540-01-200-1994	227C	9
34623	5581320	2540-01-200-1994	227C	21
34623	5581321	5310-01-205-9056	226	13
34623	5581321	5310-01-205-9056	227C	11
34623	5581321	5310-01-205-9056	227C	23
34623	5581366		212	7
34623	5581371	2590-01-198-2895	227	6
34623	5581371	2590-01-198-2895	247	5
34623	5581372	2590-01-197-4898	227	6
34623	5581372	2590-01-197-4898	247	5
34623	5581439	5305-01-203-8346	227	4
34623	5581439	5305-01-203-8346	227D	5
34623	5582303	2520-01-210-2624	117	20
34623	5582436	2510-01-310-2324	196C	27
34623	5582439	5340-01-199-3499	196	1
34623	5582481	5975-01-208-9618	49	12
34623	5582642		99	8
34623	5582643		112	2
34623	5582644		252	8
34623	5582653	4730-01-070-7680	118	6
34623	5582817	4710-01-188-3516	100	10
34623	5582817	4710-01-188-3516	100A	11
34623	5582819	4710-01-188-3515	100	6
34623	5582819	4710-01-188-3515	100A	12
34623	5583120		201	4

CROSS REFERENCE INDEXES
PART NUMBER

CAGE	PART NUMBER	STOCK NUMBER	FIG.	ITEM
34623	5583141	5306-01-195-0277	205	16
34623	5583141	5306-01-195-0277	205A	13
34623	5583156	5365-01-194-5093	206	24
34623	5583156	5365-01-194-5093	207A	25
34623	5583219	5365-01-209-7831	145	3
34623	5583231	5340-01-203-9391	202	2
34623	5583291	2540-01-210-2749	204	13
34623	5583395	5980-01-186-8319	51	2
34623	5583395	5980-01-186-8319	51A	2
34623	5583571	5365-01-198-3505	208	30
34623	5583572	5365-01-198-3401	208	36
34623	5583676	2590-01-188-5081	200H	18
34623	5583717	5340-01-209-7799	79	40
34623	5583758		117	2
34623	5583855		251	19
34623	5583993	5340-01-197-3478	201	5
34623	5584023	4710-01-186-0665	27	17
34623	5584024	4710-01-187-6759	27	12
34623	5584032	5340-01-196-0572	196D	38
34623	5584105	5340-01-197-6716	200H	20
34623	5584107	5315-01-198-3346	200H	25
34623	5584135	5340-01-203-5629	200H	22
34623	5584136	5340-01-203-5630	200H	27
34623	5584146	4710-01-185-9667	126	38
34623	5584151	2510-01-192-5950	206	16
34623	5584151	2510-01-192-5950	207A	19
34623	5584152	2540-01-192-8283	206	16
34623	5584152	2540-01-192-8283	207A	19
34623	5584173		112	8
34623	5584259	5340-01-198-7580	167B	29
34623	5584259	5340-01-198-7580	167D	8
34623	5584259	5340-01-198-7580	167E	8
34623	5584260	5340-01-197-6714	166A	29
34623	5584260	5340-01-197-6714	167E	8
34623	5584264	2510-01-211-3229	167B	33
34623	5584264	2510-01-211-3229	167E	9
34623	5584299	5365-01-197-9383	166A	21
34623	5584299	5365-01-197-9383	167B	21
34623	5584302	5340-01-198-2241	166A	8
34623	5584302	5340-01-198-2241	166B	25
34623	5584302	5340-01-198-2241	167B	8
34623	5584372		112	3
34623	5584373		251	6
34623	5584384	5330-01-209-7723	133	24
34623	5584391	5325-01-210-1633	79	12

CROSS REFERENCE INDEXES
PART NUMBER

CAGE	PART NUMBER	STOCK NUMBER	FIG.	ITEM
34623	5584436	5365-01-201-4749	166A	5
34623	5584436	5365-01-201-4749	167B	5
34623	5584462	5310-01-213-4185	113	27
34623	5584462	5310-01-213-4185	119	27
34623	5584707		166A	31
34623	5584707		167B	31
34623	5584867	5340-01-197-8675	166A	6
34623	5584867	5340-01-197-8675	167B	6
34623	5584891	5340-01-211-0838	200	5
34623	5584891	5340-01-211-0838	202	4
34623	5584900	4710-01-186-9620	127	5
34623	5584963	5340-01-211-3132	160	14
34623	5585103	5310-01-188-0745	133	3
34623	5585154	5340-01-203-8608	210A	36
34623	5585245		228	30
34623	5585245		228A	30
34623	5588063		166A	30
34623	5588063		167B	30
34623	5588064	5305-01-204-6502	55	9
34623	5588167	5340-01-185-8821	160	29
34623	5588172	5340-01-186-7658	160	8
34623	5588179	5340-01-189-9979	160	15
34623	5588179	5340-01-189-9979	201G	27
34623	5588629	5340-01-212-2407	80	22
34623	5588675	5340-01-212-4887	35	8
34623	5588701	4720-01-210-0484	14	3
34623	5588702	2510-01-262-6010	157	11
34623	5588705	5325-01-214-7817	75	9
34623	5589067	5306-01-204-2139	166A	28
34623	5589067	5306-01-204-2139	167B	28
34623	5589161	4330-01-190-3579	KITS	2
34623	5589275		248	1
34623	5590387	5340-01-211-4025	35	36
34623	5590550	5340-01-266-2995	160	7
34623	5590613		248	19
34623	5590630	2540-01-197-5463	248	20
34623	5590657	5340-01-189-9861	25	14
34623	5590669	2540-01-314-1121	262	9
34623	5591114	5340-01-260-4881	204	24
34623	5591115	4710-01-251-3076	204	27
34623	5591157		118	4
34623	5591158		118	1
34623	5591161		118	5
34623	5591168		99	5
34623	5591169	5340-01-197-2438	59	11

CAGE	PART NUMBER	STOCK NUMBER	FIG.	ITEM
34623	5591210		250	21
34623	5591253		99	3
34623	5591253		251	8
34623	5591482		112	6
34623	5591483		112	5
34623	5591483		118	3
34623	5591553	2590-01-261-5485	216	7
34623	5591553	2590-01-261-5485	217B	8
34623	5591648	5340-01-213-5735	160	2
34623	5591713	2590-01-263-3254	213	26
34623	5592840	5305-01-254-2460	158	25
34623	5592861	5305-01-254-2453	205	25
34623	5592861	5305-01-254-2453	205A	22
34623	5592878	5305-01-250-6583	51	21
34623	5592927	5310-01-253-8957	210A	21
34623	5592999	5310-01-253-0058	158	58
34623	5593030	5305-01-268-5680	233	41
34623	5593033	5310-01-152-0598	121	6
34623	5593033	5310-01-152-0598	231	1
34623	5593038	5310-01-251-0711	54	11
34623	5593047	5310-01-266-6392	267	13
34623	5593048	5310-00-251-4503	61	4
34623	5593048	5310-00-251-4503	223	14
34623	5593241	5310-01-253-8952	166A	12
34623	5593241	5310-01-253-8952	166A	37
34623	5593241	5310-01-253-8952	167B	12
34623	5593241	5310-01-253-8952	167B	37
34623	5593242	5310-01-253-8953	166A	19
34623	5593242	5310-01-253-8953	166A	35
34623	5593242	5310-01-253-8953	167B	19
34623	5593242	5310-01-253-8953	167B	35
34623	5593242	5310-01-253-8953	167E	18
34623	5593284	5305-01-255-4611	228	22
34623	5593308	5310-01-254-5352	165	3
34623	5593312	5310-01-147-4052	143	1
34623	5593312	5310-01-147-4052	154	1
34623	5593313	5305-01-254-2459	204	1
34623	5593313	5305-01-254-2459	207A	39
34623	5593495	5340-01-474-8830	266B	22
34623	5593691	5310-01-251-0748	165	15
34623	5593694	5365-01-210-4903	48	1
34623	5593926	2530-01-235-8688	131	16
34623	5593926	2530-01-235-8688	131A	16
34623	5593930	5330-01-195-9049	207A	26
34623	5593931	5330-01-239-0659	206	23

CAGE	PART NUMBER	STOCK NUMBER	FIG.	ITEM
34623	5593947	4710-01-251-3075	213	20
34623	5593947	4710-01-251-3075	213A	21
34623	5593993		113	7
34623	5593993		119	7
34623	5594076	2590-01-262-7707	213	8
34623	5594076	2590-01-262-7707	213A	9
34623	5594077	2590-01-261-6851	213	21
34623	5594077	2590-01-261-6851	213A	23
34623	5594083		30	8
34623	5594297	9905-01-248-9550	240	2
34623	5594524	4010-01-203-0412	206	2
34623	5594524	4010-01-203-0412	207A	4
34623	5595454	5365-01-186-7764	152	1
34623	5595643	5330-01-255-4986	267	18
34623	5595662	5306-01-254-2358	117	3
34623	5595972	2530-01-261-8012	131	16
34623	5595972	2530-01-261-8012	131A	16
34623	5596171		212	16
34623	5596172		212	33
34623	5596172		210A	17
34623	5596198	5340-01-440-1435	182	18
34623	5596198	5340-01-440-1435	207A	44
34623	5596198	5340-01-440-1435	207B	20
34623	5596271	5306-01-185-7071	68	3
34623	5596306	5365-01-255-0965	122	9
34623	5596306	5365-01-255-0965	123A	17
34623	5596514	9905-01-249-1612	238	22
34623	5596642	5365-01-255-4990	196D	5
34623	5596643	5365-01-255-4991	196D	5
34623	5596803	5306-01-273-6333	122	3
34623	5596803	5306-01-273-6333	123A	19
34623	5597050	4730-01-257-3348	117	22
34623	5597050	4730-01-257-3348	117A	5
34623	5597172	5340-01-186-1817	124	10
34623	5597172	5340-01-186-1817	125	6
34623	5597262		118	2
34623	5597286	5340-01-244-5765	28	14
34623	5597349	5306-01-276-1621	261	12
34623	5597360	5340-01-277-4427	123	4
34623	5597598	5320-01-275-1998	156	7
34623	5597598	5320-01-275-1998	158	53
34623	5597598	5320-01-275-1998	232	19
34623	5597890	5342-01-274-9884	12	4
34623	5597890	5342-01-274-9884	12A	1
34623	5597890	5342-01-274-9884	BULK	70

CAGE	PART NUMBER	STOCK NUMBER	FIG.	ITEM
34623	5598113	5365-01-272-8376	33	3
34623	5598113	5365-01-272-8376	117B	1
34623	5598208	5340-01-300-3715	112	13
34623	5598208	5340-01-300-3715	118	7
34623	5598209	2530-01-296-9333	110	8
70040	5614017	2920-01-188-3863	32	1
7X677	5667628	5310-00-166-8567	136	18
7X677	5688035	5331-01-157-1884	138	14
7X677	5688037	5360-01-149-6308	138	9
52788	5692682		138	8
19207	5705618	2540-01-300-8745	KITS	67
19207	5705619	2540-01-300-8744	KITS	68
34623	5714222	3040-01-452-9065	102	8
34623	5714229	2520-01-413-1902	102	18
34623	5714233	5310-01-416-3009	103	28
34623	5714499	3950-01-435-1632	260	39
34623	5714585	2920-01-461-1065	84	4
34623	5714588	2540-01-463-0200	84	1
34623	5714852	5310-01-461-8011	20	8
34623	5715160	2530-01-449-2495	113	22
34623	5715160	2530-01-449-2495	119	22
34623	5715342	4720-01-505-3475	62	6
34623	5715758	5962-01-480-5246	56	8
34623	5715896	5962-01-480-5248	56	8
34623	5716029	5962-01-497-2519	56	8
9C234	5716372	4330-01-506-2918	138A	13
34623	5716374	5305-01-502-2933	3	30
34623	5716414	4820-01-510-6041	KITS	70
34623	5716636	2590-01-539-0673	226A	4
34623	5716948	6150-01-539-7270	274F	1
34623	5717030	6150-01-539-7287	274G	1
34623	5717285	2530-01-568-4462	KITS	71
34623	5717286	2530-01-570-0763	KITS	72
34623	5717287		KITS	73
34623	5740008	5307-01-174-8640	102	7
34623	5740013	2520-01-168-7878	102	32
34623	5740017	5330-01-168-3870	102	3
34623	5740114	2520-01-162-8985	105	2
34623	5740114	2520-01-162-8985	105	9
34623	5740181	5306-01-149-6280	9	12
34623	5740201	3120-01-152-2039	4	3
34623	5740223	2590-01-159-8757	105	3
34623	5740224	5365-01-305-7067	103	25
34623	5740225	2520-01-149-4993	102	33
34623	5740230	5310-01-174-8158	103	22

CROSS REFERENCE INDEXES
PART NUMBER

CAGE	PART NUMBER	STOCK NUMBER	FIG.	ITEM
34623	5740253	5310-01-189-8468	44	3
34623	5740269	5306-01-497-4738	19	7
34623	5740278	5360-01-190-6214	44	10
34623	5740429		138	3
34623	5740430		138	2
34623	5740431		138	5
34623	5740432	4320-01-155-5145	138	6
34623	5740442	3040-01-541-9924	136	5
34623	5740444	5310-01-038-8500	136	1
34623	5740445	5306-01-040-2041	136	3
34623	5740446	2520-00-224-7463	136	2
34623	5740448	2530-01-097-7659	136	4
34623	5740452	5330-01-096-9650	136	20
34623	5740453	3110-00-403-1488	136	21
34623	5740454		136	6
34623	5740456	5340-00-960-9340	136	23
34623	5740458	2530-01-034-1715	136	22
34623	5740462	3040-01-123-4942	136	9
34623	5740464		138	4
34623	5740465	2530-01-033-1855	136	10
34623	5740476	3110-01-040-6541	136	8
34623	5740495	4820-01-306-6838	136	15
34623	5740497	4820-01-303-3982	136	16
34623	5740498	2530-01-304-1461	136	17
34623	5740499	2530-00-960-9363	136	14
34623	5740572	5305-01-188-0489	24	45
34623	5740702		20	10
34623	5741059	4330-01-189-0889	31	6
34623	5741062	5331-01-209-7726	104	3
34623	5741075	5305-01-209-7668	103	26
34623	5741083	9905-01-158-7981	243	4
34623	5741084	5305-01-211-7415	243	5
34623	5741120	5342-01-211-5327	50	60
34623	5741145	5310-01-038-8501	136	11
34623	5741219	5330-01-213-1312	BULK	29
34623	5741221	5330-01-291-4615	BULK	22
34623	5741611	4710-01-185-6179	20	3
34623	5741613	5340-01-384-9987	11	18
34623	5741746	5330-01035495	138	7
34623	5741748	2530-01-265-3153	124	4
34623	5741750	2530-01-265-3148	124	4
34623	5741994	5360-01-265-8799	124	3
34623	5741995	5360-01-265-8798	124	3
34623	5742118	5340-01-440-9678	21	18
34623	5743156	5355-01-460-4586	84	2

CAGE	PART NUMBER	STOCK NUMBER	FIG.	ITEM
34623	5743751	5330-01-415-9613	103	30
34623	5743797	4710-01-493-1712	21	24
34623	5745648	5306-01-254-2358	117	3
34623	5903101	5935-01-216-8763	71	11
34623	5934761	5310-01-480-4161	42	8
34623	5934761	5310-01-480-4161	273	18
34623	5934807	4720-01-455-9981	25	10
34623	5934816	5340-01-560-4006	217B	7
34623	5934854	4730-01-210-2732	37	4
34623	5934854	4730-01-210-2732	44A	20
34623	5934936		141	1
34623	5935425	5340-01-388-9512	KITS	74
34623	5937399	5340-01-432-4875	141	16
34623	5937960	5340-01-433-2732	141	5
34623	5937961	5340-01-433-2735	141	19
34623	5938607	3130-01-360-1051	102	21
34623	5938607	3130-01-360-1051	103	36
34623	5938619	3120-01-360-1202	102	12
34623	5938621	3130-01-360-1050	102	15
34623	5938623	5325-01-358-5450	102	5
34623	5938630	5365-01-358-4642	105	12
34623	5938633	5360-01-358-6564	105	14
34623	5938653	3120-01-360-5960	103	46
34623	5938654	3110-01-359-8858	103	45
34623	5938663	3020-01-347-8580	103	43
34623	5938665	4910-01-464-0812	103	24
34623	5938666	4730-01-359-2217	103	14
34623	5938673	5325-01-358-7962	103	34
34623	5938705	6220-01-361-5084	64	8
34623	5939517	5330-01-487-7129	117	15
34623	5939596	5365-01-548-4284	207B	26
34623	5939712	5325-01-470-4624	204A	19
34623	5939712	5325-01-470-4624	204B	31
73331	5939841	5330-00-353-0959	61	3
34623	5939878		27	16
34623	5982526	5310-01-198-1722	209	9
34623	5982526	5310-01-198-1722	196D	20
34623	5995301	5340-01-158-0098	73	4
34623	6000332	5330-01-409-1981	28	34
34623	6000332	5330-01-409-1981	BULK	25
34623	6000333		28	30
34623	6000334		28	33
34623	6000351	5306-01-411-2339	28	28
34623	6000947	5340-01-498-4369	214	11
34623	6000948	5340-01-499-2719	214	8

CROSS REFERENCE INDEXES
PART NUMBER

CAGE	PART NUMBER	STOCK NUMBER	FIG.	ITEM
34623	6001247	5325-01-470-4625	189A	1
34623	6001247	5325-01-470-4625	189B	6
34623	6001247	5325-01-470-4625	189C	1
34623	6001247	5325-01-470-4625	189D	1
34623	6001247	5325-01-470-4625	189I	1
34623	6001247	5325-01-470-4625	189P	15
34623	6001595		189Q	9
34623	6001784	5365-01-456-2032	113	30
34623	6001784	5365-01-456-2032	119	30
34623	6002219	5340-01-432-8680	111	9
34623	6002219	5340-01-432-8680	143A	24
34623	6002224	5340-01-432-4876	143	12
34623	6002226	5340-01-432-8678	144	17
34623	6002227	5340-01-437-8748	144	17
34623	6002257	5325-01-548-2809	207B	8
34623	6002343	5340-01-438-4497	146	10
34623	6002344	5340-01-434-2832	146	7
34623	6002346	5340-01-433-2721	147	5
34623	6002607	2520-01-413-0080	108	15
34623	6002629	2520-01-423-5120	108	6
34623	6002645	6680-01-477-3650	10	4
34623	6002771	4710-01-409-2504	100	4
34623	6002779	4710-01-409-2508	100	3
34623	6002942	5307-01-411-2336	87	3
34623	6003868	2530-01-420-3837	134	5
34623	6004872	2510-01-456-2277	153	3
34623	6005119	2530-01-421-2563	134	9
34623	6005120	2530-01-433-8003	113	35
34623	6005120	2530-01-433-8003	119	19
34623	6005121	2530-01-433-8702	113	19
34623	6005121	2530-01-433-8702	119	35
34623	6005193	5330-01-456-8823	113	20
34623	6005193	5330-01-456-8823	119	20
34623	6005714	5640-01-479-1272	30	9
34623	6005714	5640-01-479-1272	99	9
34623	6005714	5640-01-479-1272	99A	10
34623	6005718	5930-01-520-4919	51A	7
34623	6006173	5331-01-520-6192	281B	1
34623	6006174	5331-01-520-4916	281B	2
34623	6006217		BULK	67
34623	6006218		BULK	62
34623	6007365	5365-01-555-7102	162	29
34623	6007736	5306-01-455-8013	87	5
34623	6008029	5310-01-457-3292	110	16
34623	6008528	5340-01-473-2692	100	12

CAGE	PART NUMBER	STOCK NUMBER	FIG.	ITEM
34623	6008528	5340-01-473-2692	100A	2
34623	6008528	5340-01-473-2692	117G	19
34623	6008528	5340-01-473-2692	138C	5
34623	6008557	2540-01-466-3770	266B	16
34623	6008558	2540-01-466-3849	266B	4
34623	6008953	5340-01-442-0308	100	23
34623	6008953	5340-01-442-0308	100A	15
34623	6009349		113	25
34623	6009349		119	25
34623	6009350	5365-01-414-2895	113	31
34623	6009351	2530-01-477-3670	113	1
34623	6009352	2530-01-413-3653	113	1
34623	6009352	2530-01-413-3653	119	1
34623	6009452	3020-01-476-2701	113	38
34623	6009452	3020-01-476-2701	119	38
34623	6009453	3020-01-432-2553	113	10
34623	6009453	3020-01-432-2553	119	10
34623	6009454	5310-01-473-3373	113	8
34623	6009472	5330-01-174-8145	117	13
34623	6009792	5340-01-456-9885	142	27
34623	6009792	5340-01-456-9885	142A	21
34623	6009792	5340-01-456-9885	143A	13
34623	6009794	5340-01-457-0003	142	27
34623	6009794	5340-01-457-0003	142A	21
34623	6009794	5340-01-457-0003	143A	13
34623	6010942	2520-01-174-9580	117	11
34623	6011076	2540-01-548-9360	287A	7
34623	6011599	2540-01-539-0180	226A	9
34623	6011806	5340-01-473-1614	254	1
34623	6013001	3110-01-573-9774	200A	4
34623	6013002	9535-01-548-6632	202D	1
34623	6013019	9535-01-548-6633	202D	1
34623	6013083		204A	2
34623	6013088	5340-01-548-4859	204A	29
34623	6013091	2510-01-548-6642	204A	46
34623	6013322	2990-01-568-0107	35	1
34623	6013409	2930-01-565-7981	38A	14
34623	6013482	2510-01-547-9918	202E	6
34623	6013563	2510-01-548-1193	202E	6
34623	6013591	2540-01-560-2873	84	5
34623	6013654	5945-01-536-6091	274A	7
34623	6013654	5945-01-536-6091	288A	2
34623	6013826	5330-01-548-0887	207B	23
34623	6013827	5330-01-548-0890	207B	23
34623	6013830	5340-01-548-4829	207B	1

CAGE	PART NUMBER	STOCK NUMBER	FIG.	ITEM
34623	6013842		204B	19
34623	6014045	5340-01-548-0885	204B	27
34623	6014046	5340-01-548-1166	204B	27
34623	6014240	2590-01-566-0122	128A	5
34623	6014584	5340-01-548-2874	207B	31
34623	6014988	5305-01-548-4872	204A	11
34623	6014993	5305-01-548-0010	204B	1
34623	6015070	5340-01-548-2936	207A	18
34623	6015070	5340-01-548-2936	207B	32
34623	6015079	2510-01-547-9739	202D	11
34623	6015441	2540-01-560-2510	217A	4
34623	6015452	4720-01-536-2674	276D	5
34623	6015452	4720-01-536-2674	276E	3
34623	6015453	4720-01-536-2727	276D	7
34623	6015454	4720-01-548-7198	276D	2
34623	6015455	4720-01-536-3334	276D	1
34623	6015456	4720-01-536-3328	276D	8
34623	6015456	4720-01-536-3328	276E	13
34623	6015457	4720-01-536-3061	276E	11
34623	6015458		281A	3
34623	6015459		281A	3
34623	6015460	4720-01-536-3749	287A	1
34623	6015461	4120-01-537-4995	287B	10
34623	6015463	4720-01-536-3005	276E	6
34623	6015464	4720-01-536-2673	276E	12
34623	6015466	5340-01-537-4713	274A	6
34623	6015469	5340-01-536-3003	287B	1
34623	6015470	2510-01-537-0678	281C	1
34623	6015511		156	5
34623	6015512		158	54
34623	6015515		213A	24
34623	6015517		235A	2
34623	6015538	2510-01-560-2317	141	4
34623	6015539	2510-01-560-2321	141	17
34623	6015540		141	1
34623	6015552	5340-01-561-1772	208A	2
34623	6015553	5340-01-548-3174	287A	12
34623	6015554	5340-01-536-4022	281D	2
34623	6015556	5930-01-536-3012	276G	1
34623	6015557	5930-01-536-3033	276G	4
34623	6015562		230A	19
34623	6015563		230A	19
34623	6015568	5340-01-560-4274	223A	23
34623	6015581	4720-01-536-3751	276E	9
34623	6015582	4720-01-536-2999	276E	10

CAGE	PART NUMBER	STOCK NUMBER	FIG.	ITEM
34623	6015583	4720-01-536-2681	276E	5
34623	6015584	4720-01-536-4589	276E	4
34623	6015585	4720-01-536-2985	287B	8
34623	6015586	4720-01-536-3065	287B	9
34623	6015592	4720-01-536-2992	276D	6
34623	6015593	4710-01-536-4174	276G	6
34623	6015596	2930-01-536-3009	287C	1
34623	6015614	2540-01-536-3029	287A	2
34623	6015616	6685-01-539-7057	287A	4
34623	6015624	5310-01-536-3376	276G	7
34623	6015659	4810-01-536-3832	276F	1
34623	6015660	5310-01-536-2964	281D	1
34623	6015660	5310-01-536-2964	287B	5
34623	6015662	5365-01-539-4098	287B	6
34623	6015663	5305-01-539-4101	274A	4
34623	6015663	5305-01-539-4101	281A	2
34623	6015663	5305-01-539-4101	287B	7
34623	6015665	5340-01-536-3766	281A	1
34623	6015668	2540-01-550-0862	287A	9
34623	6015669	5340-01-536-3290	287B	4
34623	6015671	4720-01-536-2995	276E	7
34623	6015673	5340-01-536-2737	281A	1
34623	6015771		200A	7
34623	6015793	5365-01-568-1549	166B	23
34623	6015794	5365-01-568-0088	166B	3
34623	6015795	5365-01-567-8718	166B	4
34623	6016430	2540-01-548-1182	202D	21
34623	6016432	2510-01-547-9898	202D	18
34623	6016433	2510-01-547-9911	202D	23
34623	6016434	2510-01-548-0016	204A	36
34623	6016435	2590-01-547-9874	202D	24
34623	6016436	5340-01-548-1162	202D	13
34623	6016439	5340-01-548-1158	202D	13
34623	6016444	5340-01-548-0334	202D	16
34623	6016445	5340-01-548-0979	202D	16
34623	6016446	3040-01-548-0981	202D	20
34623	6016447	5340-01-548-4836	202D	20
34623	6016615	2540-01-555-0462	142A	22
34623	6016616	2540-01-555-0428	142A	22
34623	6016721	5340-01-548-1476	202C	6
34623	6016730	5310-01-548-3774	200E	19
34623	6016730	5310-01-548-3774	202D	10
34623	6016750	2530-01-420-8634	114	19
34623	6016751	2530-01-420-7895	114	19
34623	6017845	4730-01-564-6847	103A	1

CAGE	PART NUMBER	STOCK NUMBER	FIG.	ITEM
34623	6017845	4730-01-564-6847	117G	10
34623	6017845	4730-01-564-6847	117H	16
34623	6018512	5365-01-414-2895	119	31
34623	6018843	5340-01-548-6638	204A	22
34623	6018845	5340-01-548-6639	204A	20
34623	6019008	4710-01-565-7633	44A	9
34623	6019100	5340-01-548-1480	204A	35
34623	6019246	2510-01-547-9930	202D	14
34623	6019247	2510-01-547-9945	202D	25
34623	6019248	2510-01-547-9980	202D	26
34623	6019249	2510-01-548-1234	202D	27
34623	6019334	2540-01-548-2055	207B	7
34623	6019336	2540-01-548-2050	207B	7
34623	6019634	5307-01-548-4853	202C	10
34623	6019677	6150-01-539-7293	274C	1
34623	6019690	5330-01-547-9973	202D	28
34623	6019694	5330-01-548-3799	202D	15
34623	6019736		213A	14
34623	6019765	6150-01-539-7304	274H	1
34623	6019769		213A	22
34623	6019772	5340-01-547-9981	202C	7
34623	6019787	4130-01-537-4404	288A	1
34623	6019795	4710-01-536-2688	276E	8
34623	6019796	4710-01-536-4106	276D	4
34623	6019796	4710-01-536-4106	276E	2
34623	6019797	4720-01-536-6138	276D	3
34623	6019797	4720-01-536-6138	276E	1
34623	6019807		213A	1
34623	6019813	2510-01-560-3945	213A	22
34623	6019818		213A	19
34623	6019842	5340-01-536-4120	274B	2
34623	6019892	5365-01-548-5005	207B	24
34623	6019895	5365-01-548-0905	207B	24
34623	6019898	5310-01-548-4856	189Q	3
34623	6019898	5310-01-548-4856	202B	5
34623	6019898	5310-01-548-4856	202C	3
34623	6019898	5310-01-548-4856	202D	2
34623	6019906	5340-01-548-5058	207A	27
34623	6020176	2540-01-560-9297	213A	14
34623	6020177	2510-01-560-9358	213A	1
34623	6022071	5365-01-548-2564	207B	29
34623	6022264	5307-01-548-4869	204A	39
34623	6022482		196G	1
34623	6022739	4710-01-344-2035	274D	1
34623	6022739	4710-01-344-2035	274F	2

CAGE	PART NUMBER	STOCK NUMBER	FIG.	ITEM
34623	6022740		274F	3
34623	6022747	6150-01-548-6007	274G	3
34623	6022761	5340-01-548-0882	204A	44
34623	6022835		70A	1
34623	6022836		70A	1
34623	6022837		70A	1
34623	6022876	2930-01-565-8925	44A	6
0NM25	6022899	5330-01-548-2833	202D	15
34623	6022903	5365-01-548-2577	204A	26
34623	6022906	5305-01-548-2600	204A	9
34623	6022935		266M	2
34623	6022980	2510-01-548-6640	207B	6
34623	6022981	2510-01-548-6641	207B	6
34623	6022997	5310-01-548-4372	204B	3
34623	6023000		117	24
93334	6023054	5310-00-471-9243	104	2
34623	6023368		166B	19
34623	6023371		166B	10
34623	6023372	2540-01-569-0270	166B	10
34623	6023381	2590-01-568-1077	166B	30
34623	6023382	2590-01-567-8710	166B	30
34623	6023383	2510-01-567-8695	166B	1
34623	6023384	2510-01-567-8697	166B	1
34623	6023405	5340-01-565-8860	38A	1
34623	6023406	5310-01-565-8828	38A	12
34623	6023685		189P	1
34623	6023735		189Q	6
34623	6023763	5340-01-548-4281	202C	12
34623	6023771		189F	5
34623	6023772		202B	7
34623	6023775		202B	7
34623	6023955		189E	3
34623	6023974	4720-01-536-8716	276F	3
34623	6023975	4720-01-537-0552	276F	4
19207	6023991		217B	1
34623	6024128		189P	2
34623	6024155		202D	22
34623	6024170	4010-01-548-0021	204A	23
34623	6025205		202A	11
34623	6025464	3040-01-565-8358	44A	3
34623	6025527	5330-01-533-2947	BULK	69
34623	6025579		204A	1
34623	6026749	2530-01-554-8288	114	8
34623	6026749	2530-01-554-8288	120	8
34623	6027320		BULK	58

CAGE	PART NUMBER	STOCK NUMBER	FIG.	ITEM
34623	6027990		202B	20
34623	6027994		202B	19
34623	6028032		202B	20
34623	6028192	2530-01-554-4728	134	9
34623	6028423		202B	16
34623	6029035		274A	5
34623	6029071		167G	22
34623	6029072	2510-01-563-4601	167G	22
34623	6029099	5305-01-563-4892	167I	28
34623	6029110	5340-01-563-6494	167G	9
34623	6029328	5325-01-563-3457	167H	2
34623	6030053	5340-01-554-8744	189M	4
34623	6030053	5340-01-554-8744	189N	1
34623	6030239	2590-01-563-4401	167G	1
34623	6030241	5340-01-563-3809	167G	1
34623	6030287	5305-01-565-7316	44A	8
34623	6030301	2540-01-554-8545	189J	34
34623	6030337	2540-01-554-8488	189F	1
34623	6030338	9515-01-554-8505	195G	5
34623	6030343	2540-01-554-6770	189P	20
34623	6030365	2540-01-554-8525	189E	4
34623	6030366	2540-01-554-8484	189E	4
34623	6030380	2540-01-554-6785	189I	28
34623	6030404	2590-01-566-3551	142A	8
34623	6030412	2510-01-563-8322	167K	12
34623	6030541	5310-01-548-6832	276G	11
34623	6030542	5310-01-548-6846	276G	10
34623	6030573	2510-01-545-5890	167F	1
34623	6030574	2510-01-545-5887	167F	1
34623	6030575	2510-01-545-5891	167F	1
34623	6030576	2510-01-545-5893	167F	1
34623	6030591		167K	9
34623	6030592	2510-01-563-5209	167K	4
34623	6030593	2510-01-563-4407	167K	5
34623	6030593	2510-01-563-4407	170A	5
34623	6030594	2510-01-545-5898	167F	6
34623	6030594	2510-01-545-5898	167K	1
34623	6030595	2510-01-545-5899	167F	6
34623	6030595	2510-01-545-5899	167K	1
34623	6030596	2540-01-563-5107	167K	11
34623	6030597	5305-01-554-2331	167K	10
34623	6030597	5305-01-554-2331	170A	14
34623	6030613	3110-01-563-5247	167F	5
34623	6030616	2530-01-554-8307	114	16
34623	6030616	2530-01-554-8307	120	16

CROSS REFERENCE INDEXES
PART NUMBER

CAGE	PART NUMBER	STOCK NUMBER	FIG.	ITEM
34623	6030617	2530-01-554-8309	120	6
34623	6030618	2530-01-554-8315	120	6
34623	6030624	2530-01-554-8317	114	6
34623	6030626	2530-01-554-8340	114	6
34623	6030627	2530-01-554-8336	114	19
34623	6030629	2530-01-554-8270	114	19
34623	6030637	2540-01-554-9977	195H	8
34623	6030647	2590-01-566-2568	141A	15
34623	6030648	2590-01-566-4410	141A	15
34623	6030656	2540-01-554-6401	202A	7
34623	6030657	2540-01-554-8475	202A	7
34623	6030659	5310-01-563-3923	167H	9
34623	6030692		149	15
34623	6030693		149	15
34623	6030699	2540-01-554-8519	202B	9
34623	6030700	2540-01-554-8515	202B	9
34623	6030748		167K	9
34623	6030753	5365-01-554-6601	167I	18
34623	6030753	5365-01-554-6601	167T	54
34623	6030753	5365-01-554-6601	169J	50
34623	6030754	5365-01-554-8772	167I	2
34623	6030754	5365-01-554-8772	167T	37
34623	6030754	5365-01-554-8772	169J	36
34623	6030759	5355-01-554-2334	167K	10
34623	6030759	5355-01-554-2334	170A	14
34623	6030760	5330-01-563-3477	167K	7
34623	6030760	5330-01-563-3477	170A	6
34623	6030775	5340-01-566-0015	141A	3
34623	6030828		189I	18
34623	6030828		189J	10
34623	6030828		189K	9
34623	6030828		189L	18
34623	6030845	2540-01-554-8393	189J	24
34623	6030874	5340-01-554-6671	167H	24
34623	6030882		266J	16
34623	6030882		266L	7
34623	6030905	5340-01-563-3273	167I	5
34623	6030905	5340-01-563-3273	167T	39
34623	6030905	5340-01-563-3273	169J	37
34623	6030907	5310-01-554-7879	167F	17
34623	6030908	5365-01-554-8295	167I	12
34623	6030908	5365-01-554-8295	167T	53
34623	6030908	5365-01-554-8295	169J	48
34623	6030909	5365-01-555-0821	167I	3
34623	6030909	5365-01-555-0821	167T	43

CROSS REFERENCE INDEXES
PART NUMBER

CAGE	PART NUMBER	STOCK NUMBER	FIG.	ITEM
34623	6030909	5365-01-555-0821	169J	41
34623	6030910	5365-01-554-8442	167I	4
34623	6030910	5365-01-554-8442	167T	42
34623	6030910	5365-01-554-8442	167T	52
34623	6030910	5365-01-554-8442	169J	40
34623	6030911	2540-01-554-7188	189P	16
34623	6030912	2540-01-554-8458	189P	16
34623	6030937	2540-01-554-9913	195E	1
34623	6030943	2540-01-555-0038	195D	11
34623	6030944	2540-01-555-3018	195D	1
34623	6031156		266L	15
34623	6031217	2590-01-565-9310	141A	24
34623	6031245		266P	1
34623	6031264	5330-01-563-4688	167K	6
34623	6031463		167J	1
34623	6031464	2510-01-563-4519	167J	1
34623	6031465		167J	1
34623	6031466	2540-01-564-1627	167J	1
34623	6031467	2540-01-568-6763	167H	15
34623	6031467	2540-01-568-6763	167V	9
34623	6031468	2540-01-563-6892	167H	15
34623	6031468	2540-01-563-6892	167V	9
34623	6031488	4710-01-555-6995	266L	6
34623	6031502	2510-01-565-9285	143A	19
34623	6031522		266O	7
34623	6031528	9515-01-554-7194	195H	4
34623	6031548	4730-01-565-8363	39A	14
34623	6031562	2510-01-553-8748	167F	1
34623	6031563	2510-01-555-5347	167F	1
34623	6031568	2510-01-566-3852	142A	1
34623	6031571	5340-01-565-9172	142A	5
34623	6031640	2510-01-565-9762	143A	5
34623	6031663		189E	9
34623	6031708	2590-01-566-3545	142A	8
34623	6031722	3040-01-565-1351	167I	27
34623	6031729		167H	1
34623	6031730	2540-01-563-5542	167H	1
34623	6031732	3040-01-563-3761	167I	24
34623	6031732	3040-01-563-3761	167T	26
34623	6031732	3040-01-563-3761	169J	20
34623	6031733	3040-01-563-2196	167H	6
34623	6031734	2590-01-563-4560	167I	17
34623	6031734	2590-01-563-4560	167T	20
34623	6031734	2590-01-563-4560	169J	24
34623	6031739	2510-01-564-2280	167F	12

CROSS REFERENCE INDEXES
PART NUMBER

CAGE	PART NUMBER	STOCK NUMBER	FIG.	ITEM
34623	6031742	4710-01-565-7558	127A	9
34623	6031744	3040-01-563-3761	167I	25
34623	6031744	3040-01-563-3761	167T	19
34623	6031744	3040-01-563-3761	169J	19
34623	6031750	2510-01-563-4855	167F	12
34623	6031751	2540-01-563-5849	167I	26
34623	6031751	2540-01-563-5849	167T	16
34623	6031751	2540-01-563-5849	169J	16
34623	6031753		167F	12
34623	6031756	2510-01-563-4439	167F	12
34623	6031761	2590-01-563-5174	167F	11
34623	6031764	2590-01-563-4889	167I	27
34623	6031765	5340-01-563-3420	167F	11
34623	6031766	5365-01-563-3730	167F	13
34623	6031767		167F	14
34623	6031768	5340-01-563-3732	167F	10
34623	6031769	3040-01-563-5160	167I	29
34623	6031769	3040-01-563-5160	167T	33
34623	6031769	3040-01-563-5160	169J	31
34623	6032075	5340-01-554-6165	167H	35
34623	6032075	5340-01-554-6165	167U	5
34623	6032075	5340-01-554-6165	189E	9
34623	6032110	5340-01-554-6159	167H	31
34623	6032114	5340-01-554-6707	167H	31
34623	6032122	5340-01-554-8280	167H	26
34623	6032203	4710-01-566-1567	126A	28
34623	6032258	5365-01-554-6601	167I	1
34623	6032258	5365-01-554-6601	167T	38
34623	6032258	5365-01-554-6601	169J	35
34623	6032260	5365-01-554-8754	167I	1
34623	6032261	5365-01-554-8305	167I	3
34623	6032279	5365-01-554-6619	167G	20
34623	6032288	5340-01-554-8593	195H	1
34623	6032293	5305-01-554-6172	167G	21
34623	6032324	4710-01-566-1672	126A	26
34623	6032372	2590-01-565-9510	143A	22
34623	6032416	2590-01-565-9797	142A	25
34623	6032522	2540-01-554-6075	195E	2
34623	6032523	2540-01-554-7151	195D	17
34623	6032531	2540-01-554-8541	189P	20
34623	6032532		189P	5
34623	6032574	2540-01-554-5912	195D	8
34623	6032575	2540-01-554-9613	195J	1
34623	6032575	2540-01-554-9613	195K	1
34623	6032576	2540-01-554-9215	195J	1

CROSS REFERENCE INDEXES
PART NUMBER

CAGE	PART NUMBER	STOCK NUMBER	FIG.	ITEM
34623	6032576	2540-01-554-9215	195K	1
34623	6032577	2540-01-554-6039	195F	16
34623	6032580	2540-01-554-5909	195J	7
34623	6032581	2540-01-554-7145	195J	7
34623	6032582	2540-01-554-9185	195J	5
34623	6032586	2540-01-554-8629	195F	4
34623	6032587	2540-01-554-9407	195F	10
34623	6032588	2540-01-554-8387	189P	4
34623	6032616	5365-01-554-7830	195J	9
34623	6032616	5365-01-554-7830	195K	8
34623	6032796		266N	8
34623	6032807	2540-01-554-5962	195K	5
34623	6032808	2540-01-554-7148	195K	5
34623	6032845	4710-01-563-4476	266N	7
34623	6032848	4710-01-565-7197	103A	5
34623	6032849	4710-01-565-7581	103A	4
34623	6032857	5340-01-566-2601	101A	2
34623	6033067	2540-01-554-9596	195F	1
34623	6033083	4710-01-565-7234	117H	9
34623	6033126	4710-01-565-8003	40A	11
34623	6033127	2590-01-563-6206	266M	1
34623	6033318	2590-01-565-9341	141A	4
34623	6033359		266N	5
34623	6033365	2510-01-566-0773	143A	3
34623	6033379		149	21
34623	6033410	4010-01-566-1797	101A	5
34623	6033438	5340-01-554-6683	189M	15
34623	6033438	5340-01-554-6683	189N	4
34623	6033488	5330-01-554-8341	167F	19
34623	6033488	5330-01-554-8341	167S	2
34623	6033651	5340-01-554-6161	266L	14
34623	6034016	6150-01-560-3036	274E	1
34623	6034016	6150-01-560-3036	274G	2
34623	6034177		189M	5
34623	6034203	5340-01-554-8286	266K	4
34623	6034235		189I	25
34623	6034239		195E	9
34623	6034243	2540-01-554-8350	189N	10
34623	6034244	2540-01-554-8543	189M	11
34623	6034418	6150-01-554-5512	266O	14
34623	6034434	4210-01-554-1177	266P	KIT
34623	6034473	5340-01-563-4646	167I	11
34623	6034473	5340-01-563-4646	167T	39
34623	6034473	5340-01-563-4646	169J	49
34623	6034479	5365-01-563-2164	167I	10

CAGE	PART NUMBER	STOCK NUMBER	FIG.	ITEM
34623	6034644		156	5
34623	6034645		158	55
34623	6034686		170A	9
34623	6034687		170A	3
34623	6034688		170A	3
34623	6034710		189K	17
34623	6034710		189L	19
34623	6034720	2510-01-569-1386	170A	4
34623	6034722	2510-01-568-7896	170A	4
34623	6034739	5365-01-568-7444	170A	21
34623	6035056		170A	8
34623	6035059		167U	12
34623	6035175		167T	5
34623	6035175		169J	5
34623	6035176		167T	5
34623	6035176		169J	5
34623	6035257	4210-01-563-1731	266N	1
34623	6035273	5360-01-563-4873	167I	13
34623	6035273	5360-01-563-4873	167T	25
34623	6035273	5360-01-563-4873	169J	27
34623	6035375	2540-01-563-5043	167H	3
34623	6035375	2540-01-563-5043	167T	15
34623	6035375	2540-01-563-5043	169J	15
34623	6035376	5340-01-569-1336	167T	6
34623	6035376	5340-01-569-1336	169J	6
34623	6035377	5340-01-568-7857	167T	6
34623	6035377	5340-01-568-7857	169J	6
34623	6035561		167T	60
34623	6035652	2510-01-568-3982	167U	11
34623	6035666	2540-01-554-7228	195I	1
34623	6035667	2540-01-554-7161	195I	1
34623	6035685	5306-01-568-3377	167U	32
34623	6035716	2540-01-554-7223	195I	9
34623	6035794	2540-01-554-8544	195I	9
34623	6035816	5365-01-554-7832	195I	6
34623	6035840	4710-01-555-0263	266J	13
34623	6035841		266J	2
34623	6035842	5340-01-554-8594	266J	1
34623	6036045	4210-01-562-0854	266P	KIT
34623	6036845	4710-01-566-1660	126A	4
34623	6036848	4710-01-566-1676	126A	5
34623	6036851	2590-01-566-1785	128A	13
34623	6037075		189Q	7
34623	6037172	9330-01-566-4681	BULK	64
34623	6037175	5975-01-563-9506	266M	10

CROSS REFERENCE INDEXES
PART NUMBER

CAGE	PART NUMBER	STOCK NUMBER	FIG.	ITEM
34623	6037658	2530-01-554-3441	135A	1
34623	6037839		189J	9
34623	6038356		195G	5
34623	6038358		195F	14
34623	6038360	2510-01-567-5316	141A	10
34623	6038361	2510-01-565-9382	141A	31
34623	6038370		195H	8
34623	6038375		195H	8
34623	6038409	2930-01-566-7785	12A	9
34623	6038413		195G	1
34623	6038444	2540-01-569-0259	170A	1
34623	6038445	2540-01-569-0402	170A	1
34623	6038458	5305-01-569-0264	167U	26
34623	6038476	2990-01-568-8367	35	33
34623	6038477		189P	8
34623	6038537	2510-01-565-7327	12A	7
34623	6038644	4720-01-565-7987	12A	18
34623	6038679	2930-01-565-7209	38A	19
34623	6038710	2930-01-565-7991	38A	16
34623	6038808	4720-01-565-7612	40A	14
34623	6038831	2930-01-565-8887	38A	4
34623	6038833	2930-01-565-8878	38A	11
34623	6038851	5342-01-565-7602	12A	3
34623	6038852	5342-01-565-7609	12A	3
34623	6038872	5340-01-566-1548	126A	11
34623	6038874	2590-01-565-7328	38A	3
1WE80	6039006	2510-01-573-4728	201I	4
1WE80	6039008	5325-01-573-4721	201H	8
34623	6039195	2590-01-568-8343	167T	1
34623	6039195	2590-01-568-8343	169J	1
34623	6039226		167S	1
34623	6039227		167S	1
34623	6039228	5340-01-569-0279	167U	10
34623	6039229	5340-01-569-1330	167U	10
34623	6039247	4710-01-565-7219	117G	4
34623	6039248	4710-01-565-7598	117G	3
34623	6039250	2590-01-569-1313	167T	44
34623	6039250	2590-01-569-1313	169J	42
34623	6039254	5340-01-569-0271	167V	8
34623	6039262	5340-01-568-3976	167V	1
34623	6039294	5340-01-569-0628	167V	1
34623	6039295	5340-01-569-0641	167V	1
34623	6039304	5340-01-568-7430	167V	8
34623	6039305	2590-01-568-3971	167V	8
34623	6039306	2590-01-569-1518	167T	1

CAGE	PART NUMBER	STOCK NUMBER	FIG.	ITEM
34623	6039306	2590-01-569-1518	169J	1
34623	6039313	2540-01-569-0289	167V	5
34623	6039314	2540-01-568-4021	167V	6
34623	6039319	2540-01-569-0651	167V	5
34623	6039320	2540-01-569-0659	167V	5
34623	6039321	2510-01-568-3872	167V	5
34623	6039322	2540-01-568-3395	167V	6
34623	6039324		167S	1
34623	6039325		167S	1
34623	6039447	2590-01-569-3285	230B	3
34623	6039466	2540-01-570-2987	230B	6
34623	6039503		230B	1
34623	6039504		230B	1
34623	6039565	2590-01-566-3754	143A	18
1WE80	6039705	2510-01-573-4712	201G	5
34623	6039739	5310-01-568-8391	167T	7
34623	6039739	5310-01-568-8391	169J	7
34623	6040401	2530-01-565-9660	125A	6
34623	6040401	2530-01-565-9660	125B	8
34623	6040795	5340-01-568-3829	167U	7
34623	6041100	2510-01-568-7882	170A	10
34623	6041305	5305-01-565-8806	44A	4
34623	6041613	4720-01-565-9204	126A	12
34623	6041616	4710-01-566-2939	126A	29
34623	6041617	4710-01-565-9242	127A	6
34623	6041618	4720-01-566-3654	126A	7
34623	6041631	4720-01-565-8135	40A	4
34623	6041804	2510-01-568-7752	170A	15
34623	6041932	5340-01-566-3969	141A	2
34623	6041986	2530-01-562-8935	113A	1
34623	6041986	2530-01-562-8935	119A	1
34623	6042051	4710-01-565-9209	126A	24
34623	6042370	2590-01-568-4571	116A	3
34623	6042432	2510-01-565-9624	144A	1
34623	6042460	5360-01-566-3298	123A	26
34623	6042476		153	8
34623	6042487	2590-01-566-3923	127A	14
34623	6042520	2990-01-568-0722	35	4
34623	6042578	4710-01-565-9736	127A	13
34623	6042585	4710-01-565-9639	127A	11
34623	6042797	2590-01-566-2523	141A	26
34623	6042800	5340-01-568-4874	155A	4
34623	6042830	4710-01-565-8119	117G	1
34623	6042831	4710-01-565-7666	117G	5
34623	6042857	2590-01-565-7332	117G	18

CAGE	PART NUMBER	STOCK NUMBER	FIG.	ITEM
34623	6042882		138C	3
34623	6043025	4720-01-565-8134	40A	6
34623	6043068	2590-01-565-8851	100A	27
34623	6043073	5340-01-565-9513	209C	4
34623	6043102	2590-01-566-3013	143A	20
34623	6043134	4720-01-566-0977	12A	17
34623	6043156	2590-01-566-3934	142A	16
34623	6043241	5365-01-566-3566	126A	16
34623	6043257	4710-01-565-7642	117H	2
34623	6043340	2590-01-565-7336	117G	14
34623	6043342	4710-01-565-7659	117H	10
34623	6043382	2930-01-565-9993	38A	23
34623	6043383	2930-01-565-7623	38A	13
34623	6043522	5340-01-568-7843	141A	33
34623	6044065	4710-01-565-9718	127A	1
34623	6044183		44A	1
34623	6045022	5340-01-569-9478	200C	8
6W728	6430679	9515-01-536-1254	189J	12
6W728	6430680	9515-01-536-0928	189I	16
6W728	6431390	2540-01-532-8882	KITS	75
6W728	6431494	9515-01-536-3581	196F	9
6W728	6431499	9515-01-536-0927	196F	5
6W728	6431507	5340-01-536-9918	KITS	76
6W728	6431779	5340-01-535-4868	KITS	77
6W728	6431780	5340-01-535-6946	KITS	78
6W728	6432255	9515-01-536-1485	189B	13
6W728	6432255	9515-01-536-1485	189J	16
6W728	6432284	9515-01-536-1261	189J	4
6W728	6432285	9515-01-536-1114	189I	3
6W728	6432286	9515-01-536-3333	189J	28
6W728	6432287	9515-01-536-1070	189I	22
6W728	6432288	9515-01-536-3579	189I	2
6W728	6432309	9515-01-536-1262	189D	15
6W728	6432309	9515-01-536-1262	189L	9
6W728	6432310	9515-01-536-3375	189K	8
6W728	6432431	9515-01-536-3551	167C	13
6W728	6432491	9515-01-536-3556	202A	1
6W728	6432492	9515-01-536-0635	202A	1
6W728	6432584	9515-01-536-0618	167C	13
6W728	6432591	9515-01-536-1111	189C	12
6W728	6432591	9515-01-536-1111	189D	12
6W728	6432591	9515-01-536-1111	189K	12
6W728	6432591	9515-01-536-1111	189L	16
6W728	6432599	9515-01-536-0622	189L	20
6W728	6432600	9515-01-536-0617	189D	17

CAGE	PART NUMBER	STOCK NUMBER	FIG.	ITEM
6W728	6432600	9515-01-536-0617	189K	16
6W728	6432760	9515-01-536-3578	202A	2
6W728	6432775	5340-01-573-9486	200A	3
6W728	6432869	2540-01-542-5533	188G	11
70040	6472357	2910-01-168-7905	19	1
76760	6500318	5306-01-359-4529	102	1
34623	6500522	2530-01-554-4731	138B	3
34623	6501180	5342-01-475-6643	12	3
1EAW9	6501737	2540-01-573-9444	201L	33
96214	6632583	6150-01-573-2775	200G	6
19207	7044253	5360-00-704-4253	150	20
19207	7056640	5970-01-174-9449	49	3
19207	7056711	5940-00-705-6711	77	4
19207	7063812	5310-00-126-3842	133	8
19207	7064829	5940-00-520-2447	255	18
19207	7320533	5940-00-549-6583	66	18
19207	7331407	5342-00-678-1753	126	31
19207	7331407	5342-00-678-1753	127	18
19207	7355392	5340-00-408-2432	150	22
19207	7355393	3040-00-127-5322	150	21
19207	7355396	5310-00-735-5396	150	24
19207	7358626	5330-00-297-6329	52	14
19207	7385182	5340-00-738-5182	117G	15
7X677	7471001	3110-01-411-5784	94	15
19207	7524314	2540-00-525-7067	150	13
19207	7527645	5975-00-697-7769	76	18
19207	7529300	5365-01-129-0399	207	13
19207	7538146	5305-00-353-0969	59	5
19207	7539072	5330-00-753-9072	64	5
19207	7712510	5310-00-447-3196	266G	4
19207	7716634	5975-00-771-6634	76	11
19207	7716721	5310-00-595-7486	148	11
19207	7716721	5310-00-595-7486	149	11
19207	7720442	5310-00-772-0442	46	24
19207	7721654	5340-00-438-1833	255	4
19207	7722322	5365-00-772-2322	76	6
19207	7722333	5365-00-090-5426	76	12
19207	7722333	5365-00-090-5426	77	2
18876	7722344	5935-00-772-2344	76	19
19204	7723307	5935-00-772-3307	76	20
19207	7723308	5935-00-333-9414	76	7
19207	7723309	5310-00-393-6685	76	13
19207	7723309	5310-00-393-6685	77	3
16528	7728777	5940-00-983-4067	73	7
16528	7728777	5940-00-983-4067	75	6

CAGE	PART NUMBER	STOCK NUMBER	FIG.	ITEM
19207	7728780	5940-01-035-4212	73	9
19207	7728780	5940-01-035-4212	75	4
19207	7728780	5940-01-035-4212	264	14
19207	7731428	5935-00-773-1428	80	1
7X677	7809232	4820-01-039-3769	138	10
52788	7817725	2530-01-033-4237	136	12
24617	7828565	5330-00-843-9235	136	13
7X677	7830239	5305-01-162-9713	138	12
7X677	7830913	4320-01-155-5153	138	13
7X677	7834284	4820-01-191-4262	136	7
7X677	7846626	2530-01-123-8787	KITS	81
52788	7848088	5330-00-848-4439	138	11
52788	7848522	5330-01-044-0703	KITS	82
19207	7973326	9905-00-901-2942	243	7
19207	7982843	5310-01-255-2704	129	4
19207	7982907	5935-00-214-0904	46	7
19207	7982907	5935-00-214-0904	75	10
19207	8328424	5310-00-696-5172	51	24
19207	8328424	5310-00-696-5172	213A	13
19207	8329899	2540-00-040-2129	207	14
19207	8338561	5935-00-833-8561	75	11
19207	8338562	5970-00-833-8562	71	3
19207	8338562	5970-00-833-8562	249A	17
19207	8338564	5940-00-399-6676	71	4
19207	8338564	5940-00-399-6676	249A	16
19207	8338564	5940-00-399-6676	249B	17
19207	8338570	5310-00-298-8903	249B	18
19207	8380196	2540-01-023-5116	150	10
19207	8380199	2540-00-078-6633	150	15
19207	8396186	2590-00-801-2355	55	11
7X677	8623105	5325-01-171-3392	91	10
7X677	8623105	5325-01-171-3392	92	9
7X677	8623112	5325-00-007-3052	91	1
7X677	8623112	5325-00-007-3052	92	10
7X677	8623149	5325-01-150-7830	93	10
7X677	8623153	5325-01-158-2182	93	4
7X677	8623183		90	4
7X677	8623194		90	12
7X677	8623196		90	10
7X677	8623204		90	6
7X677	8623204		90	18
7X677	8623206		90	20
7X677	8623211	3120-01-155-4468	93	18
7X677	8623430	5330-01-150-6239	95	15
7X677	8623437	5325-01-160-4693	93	5

CROSS REFERENCE INDEXES
PART NUMBER

CAGE	PART NUMBER	STOCK NUMBER	FIG.	ITEM
7X677	8623489	5360-01-150-6086	95	5
7X677	8623664	5340-01-154-6559	95	8
7X677	8623666	5360-01-150-7829	95	9
7X677	8623849	2520-01-150-3931	92	15
7X677	8623920	3120-01-167-4172	KITS	84
7X677	8623921	3110-01-167-2443	KITS	85
7X677	8623922	3110-01-169-0734	KITS	86
7X677	8624196	3120-01-156-8763	92	14
7X677	8624209	5340-01-408-8522	94	25
7X677	8624391	5360-01-476-6291	95	6
7X677	8624781	3120-00-255-5697	92	12
7X677	8624784		90	5
7X677	8624784		90	19
7X677	8625221	5325-01-174-8626	90	21
7X677	8625401	3120-01-154-8516	90	25
7X677	8625402	3120-01-159-5773	90	25
7X677	8625403	3120-01-154-4369	90	25
7X677	8625404	3120-01-161-4033	90	25
7X677	8625405	3120-01-162-5787	90	25
7X677	8625406	3120-01-154-8517	90	25
7X677	8626173	5325-01-150-4982	90	23
7X677	8626372	3120-01-154-7174	90	15
7X677	8626372	3120-01-154-7174	90	24
7X677	8626423	5330-01-163-2614	95	3
7X677	8626807	3020-01-149-7941	90	8
7X677	8626816	5325-01-154-8562	90	1
7X677	8626817		90	11
7X677	8627334	2520-01-149-1868	93	3
7X677	8627657	5325-01-154-8561	90	3
7X677	8628202	3120-01-478-4269	92	1
7X677	8633173	2520-01-461-0092	93	1
7X677	8639743	5305-01-150-9781	11	25
7X677	8648178	5310-01-447-0968	89	3
7X677	8651654	4730-01-177-7501	88	3
7X677	8654701		88	18
7X677	8654716	5330-01-324-0906	98	6
7X677	8656613	5330-01-397-0374	88	16
7X677	8657163	5330-01-251-1607	89	7
7X677	8661271	3040-01-480-4797	94	23
7X677	8661568	5325-01-408-7971	94	8
7X677	8661571	2520-01-409-1758	94	18
7X677	8661572	5325-01-408-7970	94	16
7X677	8661577	2520-01-410-8241	94	27
7X677	8661578	5325-01-461-7157	94	28
7X677	8661579	2520-01-411-3959	94	21

CROSS REFERENCE INDEXES
PART NUMBER

CAGE	PART NUMBER	STOCK NUMBER	FIG.	ITEM
7X677	8661582	2520-01-409-1751	94	9
7X677	8661598	3040-01-410-8071	90	22
7X677	8661602	5330-01-379-1139	98	4
7X677	8661613	3040-01-410-8068	90	13
7X677	8661623	2520-01-461-0083	94	13
7X677	8661629	2520-01-461-0085	94	7
7X677	8661639	5330-01-470-6543	97	4
7X677	8661647		97	6
7X677	8661682		98	7
7X677	8661683		98	8
7X677	8661692	5315-01-460-9907	89	11
7X677	8661693	3040-01-460-9964	89	13
7X677	8661708	3040-01-447-3797	90	7
7X677	8661709	4330-01-411-2786	96	19
7X677	8661760	5330-01-414-6607	98	2
7X677	8661762	5306-01-461-3557	88	14
7X677	8661764	2520-01-461-0099	91	9
7X677	8661764	2520-01-461-0099	92	8
7X677	8661766	4810-01-460-9975	98	16
7X677	8661767	5360-01-408-7977	98	15
7X677	8661768	5315-01-461-5649	98	14
7X677	8661789	5331-01-462-7294	98	32
7X677	8661792	5306-01-411-1596	98	1
7X677	8661798	5360-01-460-9070	98	23
7X677	8661801		96	4
7X677	8661804		96	13
7X677	8661805		96	16
7X677	8661821		96	18
7X677	8661822		96	21
7X677	8661829	5330-01-478-6555	97	25
7X677	8661834	2520-01-461-2374	88	24
7X677	8661837	2520-01-478-6607	92	11
7X677	8661838	5315-01-461-8374	98	10
7X677	8661867		96	20
7X677	8661871		96	27
7X677	8661873		96	17
7X677	8661890		95	14
7X677	8661891	5360-01-460-9069	96	3
7X677	8661893	5330-01-460-8987	94	4
24617	8661894	5330-01-468-3604	94	1
7X677	8665830		88	18
7X677	8675508	3040-01-493-4036	92	7
61928	8675511	2520-01-413-5540	91	8
7X677	8675517	5330-01-460-8988	88	9
7X677	8675519	2520-01-461-0073	93	9

CROSS REFERENCE INDEXES
PART NUMBER

CAGE	PART NUMBER	STOCK NUMBER	FIG.	ITEM
7X677	8675520		93	2
7X677	8675522	2520-01-461-0074	93	8
7X677	8675523	5325-01-408-7969	94	11
7X677	8675524	5325-01-460-9908	88	10
7X677	8675529	5340-01-460-8207	88	22
7X677	8675533	5306-01-469-9903	97	3
7X677	8675535		96	9
7X677	8675537	5340-01-493-9134	97	17
7X677	8675538	5340-01-478-9995	97	19
7X677	8675539	5340-01-447-5839	82	3
7X677	8675557	2520-01-461-0076	91	2
7X677	8675558	5340-01-476-0352	91	14
7X677	8675611	3040-01-480-7536	90	14
7X677	8675612	2520-01-461-0107	90	14
7X677	8675634	5360-01-469-8077	97	22
7X677	8675728	5330-01-478-4797	95	18
7X677	8675729		93	15
7X677	8676000	5306-01-491-9414	95	20
7X677	8676074		96	22
7X677	8676222	5306-01-476-3501	97	14
7X677	8676418	5340-01-474-4002	97	21
7X677	8677091	3020-01-479-2069	92	13
7X677	8677571	3120-01-461-6679	98	31
7X677	8677572	3120-01-471-7844	98	31
7X677	8677573	3120-01-411-5783	98	31
7X677	8677574	3120-01-411-5787	98	31
7X677	8677575	3120-01-461-6677	98	31
7X677	8677582		91	7
7X677	8677582		92	4
7X677	8677583		91	6
7X677	8677583		92	6
7X677	8677743	5330-01-360-5271	88	19
7X677	8677782	5330-01-409-1665	98	30
7X677	8677887	5325-01-408-7972	94	10
7X677	8678122	5315-01-408-8020	89	8
7X677	8678257	4820-01-460-9991	98	13
7X677	8678258	5360-01-460-9068	98	12
7X677	8678294		95	11
7X677	8678337	4820-01-409-1218	96	24
7X677	8678342	4710-01-477-9034	97	15
7X677	8678347	5315-01-447-0492	89	4
7X677	8678523	5340-01-460-8364	96	29
7X677	8679439	5325-01-412-8806	94	12
7X677	8679465	5325-01-477-6608	98	22
7X677	8680235		88	8

CAGE	PART NUMBER	STOCK NUMBER	FIG.	ITEM
7X677	8680547	4820-01-460-8288	98	24
7X677	8680548	3120-01-461-6680	98	19
7X677	8680549	4820-01-461-0011	98	20
7X677	8680551	5360-01-460-9073	98	18
61928	8680816	2520-01-392-8435	91	11
61928	8680816	2520-01-392-8435	92	17
7X677	8680911	2520-01-410-8067	KITS	87
7X677	8680914	2520-01-174-8153	KITS	88
7X677	8680915	2520-01-410-8077	KITS	89
7X677	8680924	2520-01-411-2749	91	12
7X677	8681069	5360-01-460-9072	98	28
7X677	8681070	4820-01-460-9988	98	27
7X677	8681449	2520-01-461-0078	94	17
7X677	8681899		96	28
11862	8682194		98	5
7X677	8682802	2520-01-439-5265	94	20
7X677	8682855	2520-01-461-5133	98	25
7X677	8682856	5340-01-460-8361	98	21
7X677	8682857	2520-01-461-5648	98	29
7X677	8682858	5340-01-477-7052	98	11
7X677	8682888		88	20
7X677	8683075		93	17
61928	8683088	2520-01-444-2711	97	5
7X677	8683771	3020-01-480-7311	90	17
7X677	8684205		97	8
7X677	8684213		96	33
7X677	8684214		96	32
7X677	8684215	5340-01-460-8363	96	31
7X677	8684217	5340-01-460-8362	96	25
7X677	8684218		96	1
7X677	8684220	2520-01-409-2509	97	1
7X677	8684221	2520-01-398-4589	88	17
7X677	8685472		95	4
7X677	8685473		95	1
7X677	8685474		95	2
7X677	8685921	2520-01-481-8344	KITS	90
7X677	8686122		94	24
7X677	8686124	5306-01-461-3555	88	15
19207	8689221	5940-01-170-4956	255	15
19207	8701325	5310-00-655-9860	76	5
19207	8712289	5310-00-044-3340	47	6
19207	8724258	5935-00-686-2599	76	10
19207	8724494	5975-00-660-5962	46	8
19207	8724494	5975-00-660-5962	249A	18
19207	8724497	5310-00-656-0067	249A	22

CAGE	PART NUMBER	STOCK NUMBER	FIG.	ITEM
19207	8741435	5310-00-241-6921	59	7
19207	8741437	5305-00-832-5743	59	2
19207	8741442	5325-00-088-6147	59	10
19207	8741446	5325-00-832-5650	59	3
19207	8741447	6220-00-998-6142	59	6
19207	8741461	6220-00-443-0589	59	8
19207	8741491	6240-00-966-3831	59	4
19207	8741492	5935-00-807-4109	59	9
19207	8741492	5935-00-807-4109	225F	3
19207	8741492	5935-00-807-4109	249A	14
19207	8741492	5935-00-807-4109	252H	8
19207	8754124	5325-01-144-4871	65	8
19207	8754125	5930-01-153-8215	65	10
72582	8922216	5342-01-130-1141	20	12
72582	8928543	5315-01-304-9173	4	1
72582	8928543	5315-01-304-9173	8	18
18876	9083097		196C	6
18876	9129386	6685-00-618-1822	246	28
24617	9411507	5310-00-355-5645	48	7
3M915	9411807	5310-01-461-8043	63	13
3M915	9411807	5310-01-461-8043	81	17
24617	9411893	5310-00-251-4503	63	4
24617	9411893	5310-00-251-4503	223	19
24617	9411893	5310-00-251-4503	224	7
24617	9411893	5310-00-251-4503	236	7
24617	9411893	5310-00-251-4503	223A	4
24617	9411893	5310-00-251-4503	223A	12
24617	9411893	5310-00-251-4503	288A	7
34623	9412281	5315-01-173-3397	196D	19
34623	9412281	5315-01-173-3397	196D	46
7X677	9413349	5325-01-408-7973	97	2
7X677	9414224	5305-01-211-1439	52	3
24617	9414241	5305-01-361-5353	212	51
24617	9414241	5305-01-361-5353	237	18
24617	9414241	5305-01-361-5353	207B	3
24617	9414313	5305-01-380-9163	233	15
86403	9414722	5305-01-213-5024	232	14
86403	9414722	5305-01-213-5024	266F	4
86403	9414722	5305-01-213-5024	266I	9
86403	9414722	5305-01-213-5024	51A	12
24617	9414726	5305-01-447-9227	232	26
24617	9414920	5310-01-476-8589	166A	4
24617	9414920	5310-01-476-8589	166A	53
24617	9414920	5310-01-476-8589	167B	4
24617	9414920	5310-01-476-8589	167B	53

CROSS REFERENCE INDEXES
PART NUMBER

CAGE	PART NUMBER	STOCK NUMBER	FIG.	ITEM
24617	9415477	5305-00-489-0743	72	29
24617	9415477	5305-00-489-0743	79	22
24617	9415477	5305-00-489-0743	80	23
7X677	9415786	5305-01-187-9555	69	7
24617	9415857	5305-01-211-1450	27	4
24617	9415857	5305-01-211-1450	28	24
24617	9416128	5310-00-402-2778	55	5
24617	9416128	5310-00-402-2778	100A	20
24617	9416128	5310-00-402-2778	166B	17
24617	9416128	5310-00-402-2778	167T	57
24617	9416128	5310-00-402-2778	200E	9
24617	9416128	5310-00-402-2778	200F	16
24617	9416128	5310-00-402-2778	228A	28
24617	9416128	5310-00-402-2778	288A	8
3M915	9416383	5306-01-463-5232	81	18
24617	9416918	5310-01-012-8962	35	14
24617	9417028	5310-01-457-3171	45	6
24617	9417098	5310-01-408-6466	249D	8
24617	9417373	5310-01-361-1163	63	5
24617	9417373	5310-01-361-1163	139	18
24617	9417373	5310-01-361-1163	262	7
24617	9417373	5310-01-361-1163	265	4
24617	9417373	5310-01-361-1163	209A	1
24617	9417587	5310-01-525-0735	196G	13
24617	9417714	5310-01-217-5205	79	2
24617	9417714	5310-01-217-5205	161	29
24617	9417793	5310-01-211-3811	35	30
24617	9417793	5310-01-211-3811	101	99
7X677	9417793	5310-01-211-3811	137	5
7X677	9417793	5310-01-211-3811	250	18
24617	9417793	5310-01-211-3811	189G	16
24617	9418753	5310-01-465-4525	42	7
24617	9418753	5310-01-465-4525	142	4
24617	9418753	5310-01-465-4525	273	7
24617	9418753	5310-01-465-4525	302	4
24617	9418753	5310-01-465-4525	142A	2
24617	9418753	5310-01-465-4525	167F	4
24617	9418753	5310-01-465-4525	167U	21
24617	9418753	5310-01-465-4525	170A	18
24617	9418753	5310-01-465-4525	249D	10
24617	9418924	5310-01-132-8275	195E	5
24617	9418924	5310-01-132-8275	195E	8
24617	9418924	5310-01-132-8275	195F	11
34623	9419011	5306-01-266-8274	160	30
7X677	9419079	5305-01-211-7478	134	14

CROSS REFERENCE INDEXES
PART NUMBER

CAGE	PART NUMBER	STOCK NUMBER	FIG.	ITEM
7X677	9419079	5305-01-211-7478	154	4
7X677	9419143	5310-01-148-0240	65	4
7X677	9419143	5310-01-148-0240	233	2
7X677	9419293	5306-01-185-7052	221A	5
7X677	9419293	5306-01-185-7052	221B	5
24617	9419471	5310-01-432-6727	123	14
24617	9419471	5310-01-432-6727	157	10
24617	9419471	5310-01-432-6727	213	27
24617	9419471	5310-01-432-6727	266	10
24617	9419471	5310-01-432-6727	123A	5
24617	9419471	5310-01-432-6727	213A	31
24617	9419471	5310-01-432-6727	227D	15
24617	9419476	5310-00-984-3807	158	9
24617	9419477	5310-01-466-4852	256	8
7X677	9420352	5305-01-198-5510	117G	7
24617	9421077	5310-01-102-7356	122	2
24617	9421128	5310-01-457-4009	163	8
24617	9421128	5310-01-457-4009	164	15
24617	9421128	5310-01-457-4009	163A	8
24617	9421128	5310-01-457-4009	164A	15
7X677	9421294	5305-01-185-8674	205	5
7X677	9421294	5305-01-185-8674	205A	6
7X677	9421394	5310-01-199-2293	213	29
7X677	9421394	5310-01-199-2293	196G	10
24617	9421705	5305-01-381-2296	215	7
24617	9421888	5310-01-442-1109	266D	2
7X677	9422042	5306-01-207-7487	248	7
7X677	9422277	5310-01-126-9404	230	16
7X677	9422277	5310-01-126-9404	230A	16
24617	9422295	5310-01-119-3668	126	4
24617	9422295	5310-01-119-3668	215	3
24617	9422295	5310-01-119-3668	262	5
24617	9422295	5310-01-119-3668	123A	18
24617	9422295	5310-01-119-3668	126A	19
7X677	9422297	5310-01-126-9404	225A	14
24617	9422299	5310-01-150-4003	101	13
24617	9422299	5310-01-150-4003	108	3
24617	9422299	5310-01-150-4003	114	13
24617	9422299	5310-01-150-4003	120	13
24617	9422299	5310-01-150-4003	134	13
24617	9422299	5310-01-150-4003	153	7
24617	9422299	5310-01-150-4003	162	4
24617	9422299	5310-01-150-4003	207	12
24617	9422299	5310-01-150-4003	207	27
24617	9422299	5310-01-150-4003	101A	14

CROSS REFERENCE INDEXES
PART NUMBER

CAGE	PART NUMBER	STOCK NUMBER	FIG.	ITEM
24617	9422299	5310-01-150-4003	207B	42
24617	9422299	5310-01-150-4003	266C	8
24617	9422300	5310-01-315-3403	220A	8
24617	9422300	5310-01-315-3403	221B	15
24617	9422300	5310-01-315-3403	221C	8
24617	9422305	5310-01-130-4274	155	1
24617	9422307	5310-01-134-0206	150A	31
24617	9422771	5310-01-211-0691	262	10
7X677	9423534	5310-01-213-4192	163	29
7X677	9423534	5310-01-213-4192	117D	4
7X677	9423534	5310-01-213-4192	163A	30
24617	9423557	5306-01-360-1123	261	17
7X677	9423869	5310-01-186-1245	156	27
24617	9424215	5310-01-398-0319	12	1
24617	9424215	5310-01-398-0319	12A	27
7X677	9424258	5310-01-199-3440	212	39
7X677	9424320	5305-01-156-8692	124	18
7X677	9424320	5305-01-156-8692	125	17
3M915	9425170	5305-01-461-4396	232	32
24617	9425339	5305-01-315-7066	221	4
24617	9425488		266	2
24617	9426241	5305-01-206-7219	27	10
24617	9426241	5305-01-206-7219	29	18
24617	9426241	5305-01-206-7219	81	11
24617	9426241	5305-01-206-7219	170A	2
7X677	9428308	5310-01-212-2213	134	12
7X677	9428308	5310-01-212-2213	134	18
7X677	9428747	5305-01-204-4190	197	3
7X677	9428747	5305-01-204-4190	196C	16
7X677	9428795	5305-01-197-9417	266B	14
7X677	9428839	5310-01-408-9593	101	7
7X677	9428839	5310-01-408-9593	101A	6
7X677	9428851	5310-01-250-7835	36	12
7X677	9428851	5310-01-250-7835	38A	21
24617	9429047	5310-01-521-2727	196G	32
7X677	9429048	5310-01-209-7702	36	4
7X677	9429048	5310-01-209-7702	212	38
7X677	9429048	5310-01-209-7702	215	18
24617	9430397	5306-01-475-2270	12	14
24617	9430516	5305-01-411-4455	263	16
24617	9430677	5306-01-130-0457	266A	10
24617	9430677	5306-01-130-0457	266B	8
7X677	9430724	5305-01-198-3440	266B	7
7X677	9430761	5305-01-213-4149	135	5
24617	9438183		BULK	50

CROSS REFERENCE INDEXES
PART NUMBER

CAGE	PART NUMBER	STOCK NUMBER	FIG.	ITEM
7X677	9438257	4720-01-155-7784	BULK	18
7X677	9438257	4720-01-155-7784	BULK	55
7X677	9438373	4720-01-159-5796	BULK	17
7X677	9439046	4720-01-156-0549	BULK	72
7X677	9439363	4720-01-159-5796	21	3
72582	9442899	5310-01-135-4730	104	1
24617	9442937	5310-01-462-4393	25	49
24617	9442938	5310-01-315-3403	220	10
24617	9442938	5310-01-315-3403	220A	20
24617	9442938	5310-01-315-3403	221A	6
7X677	10024396	5307-01-188-4684	9	5
7X677	10044435	5360-01-165-1563	11	16
7X677	10049638	5305-01-410-8158	41	10
7X677	10054241	5330-01-096-7699	82	2
7X677	10114141	5330-01-112-1533	19	2
7X677	10137486	5330-01-150-5944	20	1
7X677	10137488	5330-01-149-0874	3	4
7X677	10137488	5330-01-149-0874	39	12
7X677	10137488	5330-01-149-0874	39A	15
7X677	10149629	2815-01-437-1016	3	2
7X677	10149663	2815-01-398-8487	7	13
7X677	10151497	5340-01-493-2555	21	25
7X677	10154626	2815-01-411-3965	7	13
7X677	10154638	2990-01-411-7898	9	8
7X677	10154688	2815-01-411-2138	4	8
7X677	10154689	3020-01-425-5380	8	8
7X677	10183926	5340-01-469-2648	3	2
7X677	10183956	4730-01-445-2358	39	15
7X677	10183956	4730-01-445-2358	39A	18
7X677	10183978		3	20
18876	10189683	5315-00-255-5580	204	6
7X677	10191640	5330-01-398-3777	9	7
19207	10192299	5340-01-197-2717	204	7
19207	10192302	5340-01-197-1444	204	12
7X677	10211661	5330-01-437-0547	15	4
7X677	10214034	2805-00-752-0158	7	8
7X677	10222654	5340-01-413-1776	9	4
7X677	10225180	5340-01-493-2538	21	23
7X677	10230567	2815-01-437-1017	3	2
7X677	10236743	2815-01-437-1014	15	5
7X677	10236744	2815-01-437-1015	15	5
7X677	10238373	2815-01-437-1027	16	3
7X677	10238374	2815-01-437-1021	16	1
7X677	10239025	2990-01-437-1020	26	5
7X677	10239026	2990-01-437-1022	26	6

CROSS REFERENCE INDEXES
PART NUMBER

CAGE	PART NUMBER	STOCK NUMBER	FIG.	ITEM
7X677	10243629		39	14
7X677	10243629		39A	17
3M915	10297095	5305-01-566-2879	12A	12
3M915	10297195	5310-01-566-1487	12A	13
34281	10371009	2530-01-185-6714	125	9
7X677	10478133	2920-01-397-7094	96	11
7X677	10478142	2520-01-411-6540	96	14
7X677	10478148	5950-01-480-5377	96	11
7X677	10483630	5331-01-494-2431	96	12
7X677	10483630	5331-01-494-2431	96	15
56161	10501759	5305-01-159-0065	138B	11
56161	10501762	5310-01-155-3857	72	11
19207	10918603	5310-00-877-5975	25	57
18876	11459081	8315-01-115-7617	BULK	32
24617	11500161	5310-01-416-5447	85	6
24617	11500206	5310-01-548-5182	126A	14
7X677	11500207	5310-01-206-7306	2	5
7X677	11500207	5310-01-206-7306	39	8
7X677	11500207	5310-01-206-7306	42	11
7X677	11500207	5310-01-206-7306	45	15
7X677	11500207	5310-01-206-7306	72	5
7X677	11500207	5310-01-206-7306	79	34
7X677	11500207	5310-01-206-7306	273	24
7X677	11500207	5310-01-206-7306	273A	6
7X677	11500207	5310-01-206-7306	39A	9
7X677	11500207	5310-01-206-7306	42A	9
24617	11500749	5310-01-165-3331	11	28
24617	11500749	5310-01-165-3331	21	19
7X677	11500815	5305-01-149-1938	8	17
7X677	11500815	5305-01-149-1938	41	7
7X677	11500815	5305-01-149-1938	126	9
7X677	11500815	5305-01-149-1938	126A	15
7X677	11500815	5305-01-149-1938	249B	8
24617	11500831	5306-01-165-4283	103	19
7X677	11500914	5306-01-149-4398	9	2
7X677	11500921	5306-01-150-1190	41	11
7X677	11500921	5306-01-150-1190	98	33
24617	11501619	5306-01-473-1895	42	10
24617	11501619	5306-01-473-1895	273	23
24617	11502685	5305-01-397-6850	3	6
24617	11502685	5305-01-397-6850	20	7
24617	11502685	5305-01-397-6850	26	4
24617	11503316	5305-01-150-5895	8	3
7X677	11503617	5305-01-150-1521	21	22
7X677	11503639	5310-01-155-2503	9	16

CROSS REFERENCE INDEXES
PART NUMBER

CAGE	PART NUMBER	STOCK NUMBER	FIG.	ITEM
24617	11503870	5306-01-474-6117	97	18
24617	11503962	5310-01-444-3084	72	10
24617	11504038	5305-01-148-7464	9	11
7X677	11504512	5306-01-148-3667	21	5
24617	11504594	5306-01-447-2568	42	13
24617	11504594	5306-01-447-2568	266	26
7X677	11504596	5306-01-243-4650	11	4
7X677	11504596	5306-01-243-4650	137	2
24617	11504617	5306-01-432-7900	42	12
24617	11504617	5306-01-432-7900	273	25
24617	11504617	5306-01-432-7900	273	26
24617	11504986	5306-01-152-4693	34	1
24617	11504986	5306-01-152-4693	63	11
7X677	11505074	5306-01-411-2342	85	7
73342	11505328	5305-01-360-1136	4	11
73342	11505328	5305-01-360-1136	42	15
73342	11505328	5305-01-360-1136	273	27
7X677	11505885	5325-01-196-5631	200H	30
24617	11506007	5310-01-512-9400	87	8
7X677	11508353	5306-01-253-7073	11	19
7X677	11508355	5306-01-149-4395	7	4
7X677	11508534	5306-01-230-3354	11	21
7X677	11508600	5306-01-165-5582	11	12
24617	11508687	5306-01-197-1492	89	1
24617	11508687	5306-01-197-1492	126	11
7X677	11508788	5310-01-462-4611	126	7
7X677	11508788	5310-01-462-4611	126A	13
7X677	11509669	5306-01-151-4925	19	6
7X677	11513606	5306-01-185-7048	110	15
7X677	11513606	5306-01-185-7048	137	10
7X677	11513606	5306-01-185-7048	125A	1
7X677	11513606	5306-01-185-7048	125B	1
7X677	11513697	5306-01-474-8959	96	10
7X677	11514308	5306-01-474-8837	88	12
7X677	11514578	5325-01-480-7331	95	17
7X677	11514603	5310-01-155-2503	62	9
7X677	11514603	5310-01-155-2503	85	4
7X677	11514603	5310-01-155-2503	128	7
7X677	11515262	5306-01-476-3500	97	16
7X677	11515763	5305-01-186-5381	17	1
7X677	11515763	5305-01-186-5381	88	25
7X677	11516230	4730-01-444-0701	39	13
34623	11516435	5340-01-568-5727	39A	16
19207	11595179	5120-00-880-4268	297	4
7X677	11609642	5310-01-147-4052	114	2

CAGE	PART NUMBER	STOCK NUMBER	FIG.	ITEM
7X677	11609642	5310-01-147-4052	120	2
7X677	11609642	5310-01-147-4052	130	2
7X677	11609642	5310-01-147-4052	142	23
7X677	11609642	5310-01-147-4052	144	5
7X677	11609642	5310-01-147-4052	145	8
7X677	11609642	5310-01-147-4052	149	18
7X677	11609642	5310-01-147-4052	141A	5
7X677	11609642	5310-01-147-4052	142A	17
7X677	11609642	5310-01-147-4052	144A	6
7X677	11609642	5310-01-147-4052	207A	32
7X677	11609642	5310-01-147-4052	207B	19
7X677	11609642	5310-01-147-4052	225A	23
19207	11613631	5945-00-789-3706	54	10
19207	11614131	5930-00-134-5036	51	12
19207	11614131	5930-00-134-5036	51A	15
19207	11630585	9905-01-181-9456	243	3
19207	11639541	6220-01-067-4718	57	5
19207	11639546	6220-00-179-4325	57	9
19207	11643398	9905-00-198-2728	238	2
19207	11668591	5935-01-184-6417	76	16
19207	11668979	5310-01-100-2067	60	5
04099	12012065	1010-01-447-2983	266D	10
04099	12012067	5315-01-447-2276	266D	13
19200	12012071	5325-01-447-2281	266D	12
77060	12078084	5935-01-443-9124	78	6
77060	12160490	5935-01-445-5599	78	2
77060	12160494	5935-01-445-5144	78	4
27767	12173602	2530-01-333-6068	124	5
19207	12273192	4730-00-871-6729	20	6
19207	12290948	2530-01-089-4992	66	16
19207	12301365	2540-01-200-1995	226	14
19207	12301365	2540-01-200-1995	249	24
19207	12301365	2540-01-200-1995	227C	12
19207	12301365	2540-01-200-1995	227C	24
7X677	12337836	5310-01-157-6773	7	12
7X677	12338062	5310-01-148-2687	102	35
19207	12338064	8145-01-231-3747	246	1
19207	12338065		246	9
19207	12338066		246	4
19207	12338067	5340-01-271-3059	246	7
19207	12338068	5340-01-264-6544	246	6
19207	12338070	5342-01-264-6543	246	22
19207	12338071	5340-01-265-3676	246	18
19207	12338073	5330-01-264-6537	246	5
19207	12338074	5340-01-264-6540	246	8

CROSS REFERENCE INDEXES
PART NUMBER

CAGE	PART NUMBER	STOCK NUMBER	FIG.	ITEM
19207	12338075	5340-01-264-6541	246	25
19207	12338076	5340-01-265-3674	246	26
19207	12338078	2520-01-268-1051	246	2
19207	12338084	5325-01-205-5378	236	17
19207	12338084	5325-01-205-5378	237	26
19207	12338084	5325-01-205-5378	237A	4
19207	12338085	5325-01-205-3203	237	31
19207	12338085	5325-01-205-3203	237A	8
19207	12338092	2590-00-454-3620	236	18
19207	12338092	2590-00-454-3620	237	28
19207	12338092	2590-00-454-3620	237A	5
19207	12338095	5310-01-208-7576	236	9
19207	12338095	5310-01-208-7576	237	12
19207	12338098	5325-01-208-5424	236	4
19207	12338098	5325-01-208-5424	237	7
7X677	12338119	5315-01-186-1352	3	14
19207	12338124	5310-01-413-2049	130	9
24617	12338130	5310-01-381-5328	216	6
19207	12338148	2510-01-187-7033	144	6
19207	12338148	2510-01-187-7033	144A	7
19207	12338152	2510-01-203-9883	145	9
19207	12338159	5340-01-214-2089	142	10
19207	12338159	5340-01-214-2089	142A	23
19207	12338163	5340-01-186-7173	2	13
19207	12338164	5365-01-205-5377	149	20
19207	12338164	5365-01-205-5377	256	17
19207	12338166	5340-01-192-3414	143	5
19207	12338170	5340-01-190-2248	112	18
19207	12338170	5340-01-190-2248	142	28
19207	12338170	5340-01-190-2248	142A	14
19207	12338172	5340-01-209-7767	118	10
19207	12338172	5340-01-209-7767	144	7
19207	12338172	5340-01-209-7767	145	6
19207	12338172	5340-01-209-7767	144A	17
19207	12338173	5340-01-210-7966	142	24
34623	12338174	2510-01-210-6942	145	10
19207	12338181	5340-01-186-7664	144	9
19207	12338181	5340-01-186-7664	144A	8
19207	12338183	2510-01-185-6114	2	12
19207	12338185	2590-01-186-0863	141	10
19207	12338185	2590-01-186-0863	141A	18
19207	12338189	2540-01-186-6039	150	4
19207	12338190	2540-01-203-5664	145	12
19207	12338195	5365-01-219-3528	150	3
19207	12338197	5340-01-204-2584	144	8

CAGE	PART NUMBER	STOCK NUMBER	FIG.	ITEM
19207	12338197	5340-01-204-2584	144A	16
19207	12338205	2510-01-185-6113	2	10
19207	12338221	2990-01-187-7030	35	9
19207	12338224	2510-01-210-6941	144	14
19207	12338224	2510-01-210-6941	144A	14
19207	12338245	2590-01-215-4325	141A	12
19207	12338245	2590-01-215-4325	142A	10
19207	12338270	3120-01-186-5527	114	20
19207	12338270	3120-01-186-5527	120	7
19207	12338270	3120-01-186-5527	120	20
19207	12338291	2530-01-188-8446	121	8
19207	12338291	2530-01-188-8446	123A	12
19207	12338295	2530-01-188-3520	121	7
19207	12338295	2530-01-188-3520	123A	6
19207	12338302	5340-01-209-7796	127	1
19207	12338314	2530-01-186-3740	154	10
19207	12338315	2510-01-187-7037	152	8
19207	12338317	5325-01-191-0595	153	4
19207	12338319	5340-01-190-0810	153	5
19207	12338322	5310-01-185-8689	153	12
34623	12338323	3040-01-186-3718	153	13
19207	12338324	5340-01-163-4773	119	40
34623	12338333	4710-01-189-0705	100	2
19207	12338337	2540-01-309-4459	35	5
19207	12338338	5325-01-187-1604	35	31
19207	12338339	5330-01-200-0466	35	19
19207	12338339	5330-01-200-0466	250	16
34623	12338340	5340-01-211-3137	35	32
19207	12338346	2990-01-211-8587	35	29
19207	12338356	3120-01-186-7714	33	24
19207	12338357	5330-01-185-0587	33	25
19207	12338362	5340-01-383-0462	33	4
19207	12338365	2540-01-185-9656	33	27
34623	12338369	2540-01-217-2669	33	21
19207	12338373	2940-01-188-3224	25	3
19207	12338377	2940-01-189-1809	25	55
19207	12338379	5330-01-188-0911	25	36
19207	12338381	4720-01-185-8152	25	7
19207	12338430	2590-01-212-5868	267	1
19207	12338435	5930-01-212-3373	64	6
19207	12338462	5330-01-211-5856	52	5
19207	12338463	6680-01-195-2146	267	10
19207	12338465	6210-01-208-4790	52	1
19207	12338466	2540-01-185-6117	51A	9
19207	12338467	2510-01-248-8875	52	6

CAGE	PART NUMBER	STOCK NUMBER	FIG.	ITEM
19207	12338468	5905-01-183-9636	233	1
19207	12338471	6620-01-181-1757	52	11
19207	12338472	6625-01-180-6542	52	10
19207	12338474	6680-01-298-0498	52	12
19207	12338475	9905-01-203-9996	238	17
19207	12338481	5340-01-266-9173	255	3
19207	12338549	4710-01-186-9617	28	8
19207	12338563	5340-01-186-8768	31	18
19207	12338567	2910-01-184-2159	28	9
19207	12338568	5340-01-186-9606	28	18
19207	12338571	5340-01-191-0748	28	32
19207	12338573	5340-01-191-0746	28	37
19207	12338574	5340-01-190-5100	28	38
19207	12338575	5340-01-193-0251	28	41
19207	12338585	5330-01-194-0473	28	10
19207	12338596	5930-01-183-6637	62	10
19207	12338599	5930-01-237-7322	62	1
19207	12338603	5945-01-193-7175	55	8
19207	12338605	5340-01-286-6191	60	11
19207	12338608	5340-01-183-7233	57	3
19207	12338608	5340-01-183-7233	58	3
19207	12338609	5340-01-189-7558	65	2
19207	12338611	6220-01-193-1970	59	1
19207	12338629	5340-01-220-3084	163	11
19207	12338635	5365-01-210-1584	164	3
19207	12338635	5365-01-210-1584	164A	3
19207	12338637	5365-01-246-8281	163	14
19207	12338637	5365-01-246-8281	163A	15
19207	12338650	5342-01-203-2822	157	22
19207	12338650	5342-01-203-2822	166A	48
19207	12338650	5342-01-203-2822	167B	48
19207	12338650	5342-01-203-2822	227D	27
19207	12338663	5340-01-192-2256	30	14
19207	12338663	5340-01-192-2256	99	10
19207	12338663	5340-01-192-2256	117G	16
19207	12338667	5340-01-253-3757	156	16
19207	12338667	5340-01-253-3757	158	40
19207	12338670	2510-01-411-2736	158	26
19207	12338709	6220-01-200-0897	156	10
19207	12338709	6220-01-200-0897	158	51
19207	12338711	5342-01-194-3128	156	6
19207	12338711	5342-01-194-3128	158	54
19207	12338716	2510-01-186-3107	158	34
19207	12338719	2510-01-262-6009	159	6
19207	12338726	5340-01-209-7794	55	10

CAGE	PART NUMBER	STOCK NUMBER	FIG.	ITEM
19207	12338734	2510-01-186-3106	156	21
19207	12338736	2510-01-262-6008	159	5
19207	12338738	2590-01-248-4873	145	12
19207	12338738	2590-01-248-4873	141A	27
19207	12338765	6160-01-470-4172	157	3
19207	12338777	5340-01-212-4714	12	27
19207	12338779	5340-01-210-2747	12	28
19207	12338779	5340-01-210-2747	12A	20
19207	12338780	4730-01-168-7872	13	5
19207	12338806	5365-01-213-4239	212	24
19207	12338806	5365-01-213-4239	210A	11
19207	12338810	2540-01-246-8289	210A	1
19207	12338813	5315-01-205-2988	212	36
19207	12338813	5315-01-205-2988	210A	18
19207	12338814	5340-01-207-0379	158	24
19207	12338818	2590-01-246-8288	210A	3
19207	12338824	5340-01-185-0404	212	42
19207	12338829	5340-01-188-1018	212	21
19207	12338829	5340-01-188-1018	210A	5
19207	12338830	2510-01-250-7597	213	1
19207	12338831	2540-01-214-1568	228	6
19207	12338831	2540-01-214-1568	228A	6
19207	12338833	5340-01-247-7912	210A	10
19207	12338835	5340-01-185-0401	212	44
19207	12338835	5340-01-185-0401	210A	30
34623	12338842	5342-01-187-7029	25	31
19207	12338843	2590-01-188-3225	212	50
19207	12338845	5340-01-185-7024	212	18
19207	12338849	2540-01-192-4500	158	30
19207	12338852	2590-01-189-1067	212	52
19207	12338852	2590-01-189-1067	210A	33
19207	12338853	5340-01-332-7515	165	8
19207	12338860	5330-01-209-5997	211	8
19207	12338860	5330-01-209-5997	212	53
19207	12338860	5330-01-209-5997	210B	9
19207	12338866	5360-01-260-0700	122	10
19207	12338866	5360-01-260-0700	123A	15
19207	12338869	5340-01-209-7807	257	2
19207	12338879	5365-01-212-2325	162	15
19207	12338880	2510-01-209-0502	160	22
19207	12338884	5340-01-211-7436	161	13
19207	12338885	5340-01-191-3222	161	17
19207	12338886	5365-01-212-4736	160	20
19207	12338889	2540-01-212-5814	160	21
19207	12338891	2540-01-209-4590	160	25

CROSS REFERENCE INDEXES
PART NUMBER

CAGE	PART NUMBER	STOCK NUMBER	FIG.	ITEM
19207	12338893	5315-01-186-5633	162	5
19207	12338894	5315-01-213-5545	160	24
19207	12338895	3120-01-186-7715	163	21
19207	12338895	3120-01-186-7715	163A	22
19207	12338899	5340-01-185-8619	161	8
19207	12338900	5340-01-186-1388	162	8
19207	12338902	2590-01-261-5484	160	13
19207	12338903	5365-01-210-1629	161	7
19207	12338904	2590-01-261-2636	160	6
19207	12338905	2510-01-185-6715	160	31
19207	12338906	5340-01-209-7834	161	27
19207	12338907	2590-01-261-2637	160	12
19207	12338909	2540-01-185-9530	160	18
19207	12338909	2540-01-185-9530	201G	4
19207	12338911	5330-01-192-8916	161	16
19207	12338912	5330-01-255-0207	160	5
19207	12338913	5340-01-186-7229	163A	23
19207	12338915	2510-01-185-6118	163	17
19207	12338915	2510-01-185-6118	163A	18
19207	12338918	5330-01-255-0208	160	11
19207	12338950	2540-01-210-2787	165	28
19207	12338957	4720-01-212-3531	139	12
19207	12338972	5340-01-214-4675	261	10
19207	12338976	5342-01-214-7809	262	8
19207	12338977	5340-01-185-8724	208	5
19207	12338997	5331-01-216-7393	267	4
19207	12338998	5331-01-216-7392	267	3
34623	12339002	5331-01-195-8889	267	16
19207	12339006	5340-01-197-5477	157	16
19207	12339006	5340-01-197-5477	117F	9
19207	12339006	5340-01-197-5477	227D	20
19207	12339009	5340-01-255-9510	157	9
19207	12339009	5340-01-255-9510	227D	14
19207	12339013	5306-01-190-2193	68	4
19207	12339017	5342-01-282-4853	68	8
19207	12339018	4710-01-254-7272	213	14
19207	12339018	4710-01-254-7272	213A	15
19207	12339019	2510-01-250-7593	213	22
19207	12339030	5340-01-260-9027	166	8
19207	12339030	5340-01-260-9027	227A	8
19207	12339035	6160-01-184-0728	68	5
19207	12339039	2510-01-251-9995	213	19
19207	12339050	5306-01-465-1564	108	12
19207	12339053	7690-01-204-0077	238	1
19207	12339058	7690-01-565-9187	226A	10

CAGE	PART NUMBER	STOCK NUMBER	FIG.	ITEM
19207	12339063	7690-01-204-0076	238	18
19207	12339064	7690-01-197-5500	240	4
19207	12339064	7690-01-197-5500	243	1
19207	12339065	7690-01-209-0864	240	1
19207	12339087	9905-01-187-9468	239	1
19207	12339100	9905-01-203-9994	238	4
19207	12339105	9905-01-185-7977	238	23
19207	12339106	9905-01-193-4065	238	5
19207	12339107	9905-01-185-3143	242	1
19207	12339109	9905-01-205-8635	238	15
19207	12339109	9905-01-205-8635	251	1
19207	12339114	5315-01-185-8781	130	1
19207	12339132	2510-01-185-6112	2	4
19207	12339133	2510-01-185-6115	2	1
19207	12339142	5340-01-182-1074	34	2
19207	12339159	4720-01-188-1370	40	12
19207	12339159	4720-01-188-1370	40A	13
19207	12339160	4720-01-188-3909	40	2
19207	12339178	5342-01-190-7735	87	13
19207	12339179	5342-01-189-9982	2	7
19207	12339183	5360-01-186-4845	130	3
19207	12339186	2540-01-257-3877	149	3
19207	12339187	5340-01-207-0717	157	19
19207	12339187	5340-01-207-0717	247	10
19207	12339187	5340-01-207-0717	227D	33
19207	12339188		158	13
19207	12339194	2590-01-247-7910	158	7
19207	12339201	2510-01-307-0152	232	39
19207	12339204	5310-01-189-8476	126	29
19207	12339204	5310-01-189-8476	127	16
14438	12339206	5310-01-439-1154	152	3
19207	12339207	5307-01-188-1229	153	14
19207	12339208	2910-01-210-5872	30	1
19207	12339222	2510-01-192-5947	158	32
19207	12339223	4010-01-194-8546	208	8
19207	12339223	4010-01-194-8546	208A	10
19207	12339235	4730-01-184-6971	126	30
19207	12339235	4730-01-184-6971	127	17
19207	12339240	5305-01-189-3769	43	2
19207	12339251	4720-01-189-2218	233	39
19207	12339251	4720-01-189-2218	103A	11
19207	12339251	4720-01-189-2218	249A	30
19207	12339252	2590-01-186-8704	275	17
19207	12339261	5340-01-189-7554	232	21
19207	12339263	4710-01-210-3504	233	6

CAGE	PART NUMBER	STOCK NUMBER	FIG.	ITEM
34623	12339296	5325-01-194-0562	29	24
34623	12339297	5325-01-210-2870	28	4
19207	12339301	5340-01-190-0807	108	1
19207	12339308	5310-01-188-1093	133	5
19207	12339310	5315-01-201-3592	133	6
19207	12339313	5310-01-188-6861	55	6
19207	12339318	6150-01-477-3659	66	19
19207	12339319	6150-01-477-3656	66	10
19207	12339320		66	24
19207	12339327	5999-01-183-9530	228	20
19207	12339327	5999-01-183-9530	228A	20
19207	12339331	5975-01-484-1150	74	14
19207	12339333	5340-01-209-7387	72	9
19207	12339334	5975-01-207-1706	71	2
19207	12339338	5935-01-212-9631	79	13
19207	12339358	2590-01-196-5228	11	1
19207	12339369	5360-01-198-3525	166A	43
19207	12339369	5360-01-198-3525	167B	43
19207	12339379	5365-01-253-8980	166A	51
19207	12339379	5365-01-253-8980	166B	15
19207	12339379	5365-01-253-8980	167B	51
19207	12339380	5355-01-252-6504	166A	38
19207	12339380	5355-01-252-6504	167B	38
19207	12339386	5340-01-421-1782	166B	33
19207	12339396	4730-01-148-2758	39	17
19207	12339396	4730-01-148-2758	41	1
19207	12339396	4730-01-148-2758	39A	20
19207	12339402	5325-01-209-7843	133	4
19207	12339402	5325-01-209-7843	233	26
19207	12339410	4730-01-187-6929	13	4
34623	12339413	5305-01-285-4923	48	11
78553	12339425	5310-01-253-6439	35	21
78553	12339425	5310-01-253-6439	161	14
78553	12339425	5310-01-253-6439	162	10
19207	12339426	5310-01-448-3219	232	27
19207	12339428	5305-01-211-1470	165	29
19207	12339433	5310-01-218-3190	160	9
19207	12339434	5306-01-286-7182	162	21
19207	12339435	5306-01-186-7129	163A	21
19207	12339438	5340-01-266-6398	213	15
19207	12339438	5340-01-266-6398	213A	16
19207	12339450	2510-01-199-1499	166A	32
19207	12339450	2510-01-199-1499	167B	32
19207	12339450	2510-01-199-1499	167E	10
19207	12339462	5330-01-196-7969	166A	26

CROSS REFERENCE INDEXES
PART NUMBER

CAGE	PART NUMBER	STOCK NUMBER	FIG.	ITEM
19207	12339492	5360-01-210-2852	34	3
19207	12339501	5310-01-198-7585	131	7
19207	12339501	5310-01-198-7585	131A	7
19207	12339504	2540-01-212-4959	228A	2
19207	12339505		228A	5
19207	12339509	2510-01-289-2233	210A	34
19207	12339514	9340-01-185-3757	212	54
19207	12339519	5305-01-199-3371	208	14
19207	12339519	5305-01-199-3371	201G	15
19207	12339519	5305-01-199-3371	208A	16
19207	12339519	5305-01-199-3371	227A	5
19207	12339544	5315-01-289-6212	207	11
19207	12339544	5315-01-289-6212	207	24
19207	12339545	5340-01-214-4992	207	6
19207	12339545	5340-01-214-4992	207	23
19207	12339545	5340-01-214-4992	207B	41
19207	12339546	2540-01-209-6049	207	3
19207	12339546	2540-01-209-6049	207	20
19207	12339546	2540-01-209-6049	207B	38
19207	12339547	5360-01-194-6070	207	4
19207	12339547	5360-01-194-6070	207	21
19207	12339547	5360-01-194-6070	207B	39
19207	12339548	5305-01-197-1594	207	2
19207	12339548	5305-01-197-1594	207	19
19207	12339548	5305-01-197-1594	207B	37
19207	12339558	9558-01-548-1659	207A	7
19207	12339558	9558-01-548-1659	207B	15
19207	12339559	5307-01-254-2504	200	37
19207	12339559	5307-01-254-2504	202	7
19207	12339560	5310-01-212-2303	200	3
19207	12339560	5310-01-212-2303	196D	27
19207	12339560	5310-01-212-2303	202C	8
19207	12339561	2540-01-192-5949	200	4
19207	12339561	2540-01-192-5949	202	3
19207	12339561	2540-01-192-5949	196D	28
19207	12339561	2540-01-192-5949	202C	4
19207	12339562	2540-01-194-0197	196D	26
19207	12339563	5340-01-203-9391	202C	7
19207	12339571	5340-01-211-0838	196D	29
19207	12339571	5340-01-211-0838	202C	5
19207	12339579	5342-01-194-5806	205	28
19207	12339579	5342-01-194-5806	204A	37
19207	12339579	5342-01-194-5806	205A	26
34623	12339581	5340-01-197-8239	204B	23
19207	12339591	5340-01-548-0910	204B	2

CAGE	PART NUMBER	STOCK NUMBER	FIG.	ITEM
34623	12339594	5330-01-197-8298	204	15
34623	12339595	5330-01-195-9083	204	2
19207	12339599	5310-01-197-1100	182	25
19207	12339599	5310-01-197-1100	207A	40
19207	12339601	5340-01-460-5002	207A	41
19207	12339601	5340-01-460-5002	207B	45
19207	12339602	3120-01-200-4105	204	34
19207	12339605	5340-01-197-2642	206	20
19207	12339605	5340-01-197-2642	207A	28
19207	12339609	5307-01-449-3769	204	36
19207	12339609	5307-01-449-3769	206	6
19207	12339611	5340-01-197-2716	206	22
19207	12339611	5340-01-197-2716	207A	38
19207	12339612	2510-01-189-9741	204	16
19207	12339621	5340-01-197-6753	204A	3
19207	12339625	2510-01-249-1583	204	22
19207	12339642	2590-01-188-7394	201N	1
19207	12339642	2590-01-188-7394	207A	9
19207	12339650	2510-01-249-1580	204	20
19207	12339660	5340-01-456-6557	27	11
19207	12339662	5307-01-190-7650	87	11
19207	12339663	5315-01-190-5908	208	21
19207	12339663	5315-01-190-5908	208A	23
19207	12339672	5340-01-197-6715	200H	24
19207	12339680	2590-01-188-5079	201	1
19207	12339680	2590-01-188-5079	200H	31
19207	12339681	5340-01-197-3478	200H	36
19207	12339682		200H	35
19207	12339692	2910-01-186-6038	28	15
19207	12339694	5310-01-215-5356	158	31
19207	12339694	5310-01-215-5356	232	22
19207	12339724	5310-01-194-6459	200	24
19207	12339724	5310-01-194-6459	196D	36
19207	12339724	5310-01-194-6459	204A	25
19207	12339724	5310-01-194-6459	207B	48
19207	12339725	5315-01-204-2328	166A	39
19207	12339725	5315-01-204-2328	167B	39
19207	12339726	5315-01-203-8543	166A	41
19207	12339726	5315-01-203-8543	167B	41
19207	12339730	5310-01-254-4284	166A	3
19207	12339730	5310-01-254-4284	167B	3
19207	12339731	5340-01-198-2240	166A	8
19207	12339731	5340-01-198-2240	166B	25
19207	12339731	5340-01-198-2240	167B	8
19207	12339735	2510-01-303-5769	52	8

CAGE	PART NUMBER	STOCK NUMBER	FIG.	ITEM
19207	12339765	5340-01-195-5397	201K	29
19207	12339767	5365-01-196-2699	201K	30
19207	12339777	2590-01-194-0309	201K	14
19207	12339832	5340-01-238-9543	25	56
34623	12339833	4710-01-209-6746	250	5
19207	12339840	4720-01-194-5334	250	23
19207	12339844	4710-01-202-8245	252	1
19207	12339846	6680-01-185-3202	252	3
19207	12339848	5340-01-185-7959	250	9
19207	12339856	2590-01-213-1628	261	21
34623	12339857	2590-01-213-1629	261	15
19207	12339875	2540-01-213-8057	261	1
34623	12339878	2930-01-426-7711	37	2
34623	12339884	4730-01-478-4260	249A	6
34623	12339884	4730-01-478-4260	249C	1
34623	12339884	4730-01-478-4260	249D	4
19207	12339888	4730-01-186-5994	31	16
19207	12339890	5340-01-187-0892	27	2
19207	12339890	5340-01-187-0892	112	21
19207	12339894	4820-01-210-3488	28	5
19207	12339904	5340-01-470-7135	157	4
19207	12339905	5340-01-470-7160	157	6
19207	12339908	2510-01-209-1881	213	13
19207	12339911	2940-01-188-5117	25	17
19207	12339945	5340-01-367-2070	208	15
19207	12339945	5340-01-367-2070	208A	17
19207	12339963	3040-01-192-3673	267	17
19207	12339974	4730-01-185-9453	37	8
34623	12339977	4720-01-515-9683	37	13
19207	12339978	4730-01-185-5348	25	38
19207	12339978	4730-01-185-5348	107	3
19207	12339978	4730-01-185-5348	112	29
19207	12339978	4730-01-185-5348	118	17
19207	12339978	4730-01-185-5348	251	5
19207	12339978	4730-01-185-5348	101A	17
19207	12339978	4730-01-185-5348	116A	18
19207	12339978	4730-01-185-5348	117H	1
19207	12339978	4730-01-185-5348	44A	2
19207	12339981		251	4
34623	12339982	4810-01-192-5817	139	5
19207	12339996	5340-01-197-2382	250	20
19207	12339997	2590-01-192-4425	251	11
19207	12339999	5340-01-189-7739	208	20
19207	12339999	5340-01-189-7739	208A	22
19207	12340003	5340-01-196-8158	205	22

CAGE	PART NUMBER	STOCK NUMBER	FIG.	ITEM
19207	12340003	5340-01-196-8158	204B	11
19207	12340003	5340-01-196-8158	205A	19
34623	12340029	4720-01-212-6403	233	27
19207	12340031	2540-01-196-5313	212	8
19207	12340045	5365-01-271-2491	208	27
19207	12340045	5365-01-271-2491	262	4
19207	12340045	5365-01-271-2491	208A	30
19207	12340046	4720-01-360-2380	37	6
34623	12340051	2540-01-188-3229	222	5
19207	12340053	5315-01-197-3122	200H	23
19207	12340058	5310-01-253-8437	101	12
19207	12340058	5310-01-253-8437	220	11
19207	12340058	5310-01-253-8437	221	6
19207	12340058	5310-01-253-8437	101A	13
19207	12340058	5310-01-253-8437	195H	5
19207	12340058	5310-01-253-8437	221A	7
19207	12340061	2930-01-256-5350	37	3
19207	12340074	2530-01-189-0897	65	9
19207	12340088	5330-01-202-8360	196B	19
19207	12340088	5330-01-202-8360	196G	34
19207	12340091	2510-01-254-1056	196G	16
19207	12340094	5342-01-268-0921	196G	9
19207	12340098	5365-01-253-8975	196G	21
19207	12340104	2510-01-257-3747	196C	28
19207	12340111	3040-01-198-7473	196B	10
19207	12340116	2510-01-252-6240	210	7
19207	12340116	2510-01-252-6240	196D	3
19207	12340117	5330-01-270-1353	196C	26
19207	12340122	5330-01-258-4664	196G	17
19207	12340123	2590-01-258-9491	196G	15
19207	12340126	2510-01-253-2839	196G	28
19207	12340130	5340-01-253-5479	223A	21
19207	12340131	2540-01-202-8545	235	18
19207	12340131	2540-01-202-8545	235A	17
19207	12340132	5365-01-198-3463	208	35
19207	12340152	1010-01-252-6300	196G	4
19207	12340155	2510-01-197-8572	223	7
19207	12340155	2510-01-197-8572	223A	22
19207	12340164	5340-01-247-7918	219	13
19207	12340167	5975-01-197-5505	235	1
19207	12340167	5975-01-197-5505	235A	1
19207	12340170	2540-01-246-8292	223	18
19207	12340170	2540-01-246-8292	223A	3
19207	12340201	5340-01-254-7189	226	19
19207	12340201	5340-01-254-7189	227C	16

CROSS REFERENCE INDEXES
PART NUMBER

CAGE	PART NUMBER	STOCK NUMBER	FIG.	ITEM
19207	12340201	5340-01-254-7189	227C	30
19207	12340204	5330-01-321-8622	249	14
19207	12340204	5330-01-321-8622	BULK	28
19207	12340239	5340-01-204-3862	227	3
19207	12340239	5340-01-204-3862	247	2
19207	12340239	5340-01-204-3862	227D	4
19207	12340252	2530-01-196-4724	165	1
34623	12340255	5325-01-257-0801	204	23
19207	12340258	5340-01-332-7599	232	16
19207	12340263	5310-01-269-0786	36	10
19207	12340264	5340-01-197-3461	36	11
19207	12340293	2590-01-197-4899	200	13
19207	12340293	2590-01-197-4899	196G	54
19207	12340293	2590-01-197-4899	200C	14
19207	12340301	2540-01-192-9718	196D	21
19207	12340310	3120-01-188-5082	197	2
19207	12340310	3120-01-188-5082	196C	14
19207	12340310	3120-01-188-5082	196G	50
19207	12340311	2510-01-189-9828	196C	25
19207	12340313	2590-01-204-7836	196G	56
19207	12340313	2590-01-204-7836	200C	9
34623	12340331	4730-01-394-8345	44A	21
19207	12340334	2540-01-185-3113	196D	24
19207	12340336		196B	15
19207	12340337	4710-01-189-9727	196B	22
19207	12340337	4710-01-189-9727	196G	52
19207	12340338	2540-01-192-5937	196D	41
19207	12340360	2540-01-174-7696	164	19
19207	12340362	5935-01-238-0543	77	8
19207	12340364	5340-01-197-5470	236	1
19207	12340364	5340-01-197-5470	237	4
34623	12340395	5331-00-580-6586	139	7
34623	12340395	5331-00-580-6586	140	8
34623	12340395	5331-00-580-6586	138A	27
34623	12340395	5331-00-580-6586	252D	8
34623	12340395	5331-00-580-6586	252F	6
19207	12340487	1015-01-200-0869	219	4
19207	12340487	1015-01-200-0869	235	9
19207	12340514	5305-01-188-5133	86	2
19207	12340515	5305-01-215-5174	10	1
19207	12340515	5305-01-215-5174	72	13
33729	12340526	5325-01-437-4175	227B	7
19207	12340570	6625-01-192-7498	66	28
19207	12340608	2510-01-325-8741	249	10
19207	12340608	2510-01-325-8741	249	16

CAGE	PART NUMBER	STOCK NUMBER	FIG.	ITEM
19207	12340628	5340-01-206-5040	200E	24
19207	12340628	5340-01-206-5040	201K	38
19207	12340638	2540-01-202-8547	165	16
31272	12340648	5340-01-434-2864	198	22
31272	12340648	5340-01-434-2864	199	4
34623	12340648	5340-01-434-2864	197A	17
34623	12340648	5340-01-434-2864	200B	11
34623	12340648	5340-01-434-2864	200C	7
34623	12340648	5340-01-434-2864	200F	26
19207	12340652	7690-01-256-4908	238	24
19207	12340660	2540-01-422-0253	228A	1
19207	12340664	5342-01-205-5381	72	28
19207	12340665	5340-01-213-4665	80	24
19207	12340666	5340-01-443-6908	80	25
19207	12340679	2540-01-196-1291	227D	13
19207	12340682	2540-01-199-6759	227	1
19207	12340682	2540-01-199-6759	227D	2
34623	12340697	9330-01-197-5458	248	13
19207	12340708	5340-01-466-5243	248	4
19207	12340710	5340-01-198-0686	249	6
19207	12340710	5340-01-198-0686	249	17
19207	12340713	2540-01-206-4115	227	2
19207	12340713	2540-01-206-4115	247	1
19207	12340713	2540-01-206-4115	227D	3
19207	12340747	2540-01-199-6760	227A	2
19207	12340780	5340-01-259-8579	208	18
19207	12340780	5340-01-259-8579	208A	20
19207	12340792	5305-01-264-5874	158	50
19207	12340799	4720-01-214-5757	25	37
19207	12340814	7690-01-204-7785	245	1
19207	12340814	7690-01-204-7785	204A	38
19207	12340828	4710-01-251-3073	213A	20
19207	12340840		51	5
19207	12340840		51A	5
19207	12340842	4210-01-259-5634	225	1
19207	12340869	5340-01-460-5291	158	24
19207	12340904	7690-01-190-8501	245	2
19207	12340909	7690-01-188-5144	240	5
19207	12340910	9905-01-204-7776	238	9
19207	12340917	7690-01-256-4909	238	25
19207	12340925	7690-01-291-2974	238	6
34623	12341027	2990-01-383-5689	250	11
19207	12341348	5330-01-458-3810	205	3
19207	12341348	5330-01-458-3810	205A	4
19207	12341640	5365-01-477-2843	213	30

CROSS REFERENCE INDEXES
PART NUMBER

CAGE	PART NUMBER	STOCK NUMBER	FIG.	ITEM
19207	12341640	5365-01-477-2843	213A	29
19207	12341798	5340-01-271-5866	189P	12
19207	12341856	5310-01-286-6077	48	10
19207	12341856	5310-01-286-6077	87	7
19207	12341856	5310-01-286-6077	153	9
19207	12341856	5310-01-286-6077	162	26
19207	12341856	5310-01-286-6077	200	20
19207	12341856	5310-01-286-6077	220	3
19207	12341856	5310-01-286-6077	221	1
19207	12341856	5310-01-286-6077	189I	6
19207	12341856	5310-01-286-6077	189J	2
19207	12341856	5310-01-286-6077	189K	2
19207	12341856	5310-01-286-6077	189L	1
19207	12341856	5310-01-286-6077	189M	8
19207	12341856	5310-01-286-6077	189N	3
19207	12341856	5310-01-286-6077	189P	7
19207	12341856	5310-01-286-6077	195D	5
19207	12341856	5310-01-286-6077	195E	15
19207	12341856	5310-01-286-6077	195F	2
19207	12341856	5310-01-286-6077	195I	11
19207	12341856	5310-01-286-6077	195J	12
19207	12341856	5310-01-286-6077	195K	9
19207	12341856	5310-01-286-6077	220A	3
19207	12341856	5310-01-286-6077	221A	3
19207	12341856	5310-01-286-6077	221B	1
19207	12341856	5310-01-286-6077	221C	3
19207	12341886	5640-01-309-3866	213	9
34623	12341886	5640-01-309-3866	213A	10
19207	12341887	5640-01-309-3870	159	3
34623	12341887	5640-01-309-3870	159	3
19207	12341887	5640-01-309-3870	213	31
19207	12341887	5640-01-309-3870	213A	30
19207	12341888	5640-01-309-3867	159	1
34623	12341888	5640-01-309-3867	159	1
19207	12341888	5640-01-309-3867	213	5
34623	12341888	5640-01-309-3867	213A	7
19207	12341889	5640-01-309-3868	159	2
34623	12341889	5640-01-309-3868	159	2
19207	12341889	5640-01-309-3868	213	10
34623	12341889	5640-01-309-3868	213A	11
19207	12341891	5340-01-287-5825	213	3
19207	12341891	5340-01-287-5825	213A	4
19207	12341893	2530-01-285-8381	133	23
19207	12341897	5310-01-289-5455	122	5
19207	12341897	5310-01-289-5455	123A	20

CAGE	PART NUMBER	STOCK NUMBER	FIG.	ITEM
19207	12341900	5340-01-301-7929	116	10
19207	12341900	5340-01-301-7929	144A	10
19207	12341902	2530-01-291-4597	122	4
19207	12341902	2530-01-291-4597	123A	23
19207	12341968	5365-01-277-2387	261	14
19207	12341969	5340-01-265-8905	261	20
19207	12342076	5340-01-292-5402	45	3
19207	12342096	4730-01-311-4294	29	23
19207	12342105	5330-01-315-1609	88	30
19207	12342107	5340-01-314-5602	88	29
34623	12342130	2540-01-314-9379	230	4
19207	12342130	2540-01-314-9379	230A	4
19207	12342130	2540-01-314-9379	265F	3
19207	12342131	2540-01-314-1188	230	6
19207	12342132	5340-01-315-3611	230	14
19207	12342132	5340-01-315-3611	230B	7
19207	12342133	5307-01-316-2986	230	18
19207	12342133	5307-01-316-2986	230B	8
19207	12342134	5340-01-316-1507	230	21
19207	12342136	5340-01-316-2959	230	19
19207	12342138	2540-01-314-2101	230A	9
19207	12342165	7690-01-315-8539	238	3
19207	12342287	4010-01-466-0849	265	5
19207	12342287	4010-01-466-0849	200F	4
19207	12342287	4010-01-466-0849	201F	5
19207	12342287	4010-01-466-0849	201H	5
19207	12342287	4010-01-466-0849	205C	8
19207	12342306	5340-01-315-7223	69	10
19207	12342338	5305-01-315-8649	66	33
34623	12342339	5305-01-185-8657	124	17
34623	12342339	5305-01-185-8657	125	1
34623	12342342	2530-01-333-8263	124	5
19207	12342354	4030-01-316-1551	148	12
19207	12342354	4030-01-316-1551	149	12
19207	12342371	2590-01-336-3271	183	26
19207	12342372	5340-01-334-4241	220	15
19207	12342381	5340-01-333-5851	200	21
19207	12342381	5340-01-333-5851	220	8
19207	12342387	2510-01-358-1178	148	7
19207	12342387	2510-01-358-1178	253	1
19207	12342388	2510-01-357-8789	148	7
19207	12342388	2510-01-357-8789	253	1
19207	12342389	2510-01-358-1176	253	24
19207	12342390	2510-01-358-1177	253	24
34623	12342404	2590-01-316-0084	148	15

CAGE	PART NUMBER	STOCK NUMBER	FIG.	ITEM
34623	12342408	2510-01-350-4949	161	3
34623	12342441	2540-01-395-8785	249	1
19207	12342442	2540-01-197-5528	249	4
19207	12342455	2510-01-335-7363	213	7
19207	12342455	2510-01-335-7363	213A	8
19207	12342501	2540-01-186-0969	228	10
19207	12342501	2540-01-186-0969	228A	10
19207	12342545	5307-01-408-4029	42	20
19207	12342545	5307-01-408-4029	273	16
19207	12342646	5340-01-378-5201	66	16
19207	12342647	5340-01-378-7525	66	17
19207	12342654	5935-01-415-4322	71	18
19207	12342658	5340-01-358-6697	70	3
19207	12342661	2540-01-411-7519	263	10
19207	12342662	5340-01-406-6964	263	13
19207	12342663	5340-01-406-6965	263	8
19207	12342664	5340-01-406-7418	263	6
19207	12342665	5340-01-407-7192	263	17
19207	12342675	5305-01-449-1001	182	22
19207	12342675	5305-01-449-1001	207A	36
19207	12342679	5340-01-380-4561	121	1
19207	12342679	5340-01-380-4561	123A	1
19207	12342680	5310-01-382-5031	113	26
19207	12342680	5310-01-382-5031	119	26
19207	12342681	5930-01-347-9216	228	12
19207	12342681	5930-01-347-9216	228A	12
19207	12342682	5355-01-353-6934	228	14
19207	12342682	5355-01-353-6934	228A	14
9C234	12342683	2590-01-394-9672	220	4
19207	12342711	3120-01-413-6106	46	23
19207	12342712	5935-01-415-4392	71	17
19207	12342747	4710-01-358-6397	27	25
19207	12342747	4710-01-358-6397	249D	3
19207	12342748	4710-01-358-2127	27	23
19207	12342772	3120-01-382-4194	46	16
19207	12342794	5331-01-346-3806	131	12
19207	12342794	5331-01-346-3806	131A	13
19207	12342808	2930-01-385-9108	233	20
19207	12342809	5340-01-381-2248	233	17
92878	12342810	6105-00-512-9225	233	14
19207	12342864	5310-01-415-5245	71	19
19207	12342869	2940-01-188-3387	25	24
34623	12342872	5330-01-452-2474	25	23
34623	12342875	2530-01-383-5740	133	10
19207	12342876	2530-01-384-7154	133	14

CAGE	PART NUMBER	STOCK NUMBER	FIG.	ITEM
19207	12342886	5330-01-381-1810	228	35
19207	12342886	5330-01-381-1810	228A	35
19207	12342900	4710-01-358-1943	126	22
19207	12342901	4710-01-357-9968	127	7
19207	12342917	5935-01-384-2610	69	1
19207	12342920	5935-01-397-3813	69	5
19207	12342924	5935-01-396-3991	69	14
19207	12342925	5310-01-406-9129	69	16
19207	12342943	4910-01-185-7966	298	2
19207	12342947	4730-01-399-0241	140	17
34623	12342949	4710-01-412-0273	27	1
34623	12342950	4710-01-413-1360	27	5
9C234	12342954	2590-01-396-1422	218	1
9C234	12342955	2590-01-396-1424	218	1
34623	12342960	2540-01-395-7999	149	4
19207	12342965	5340-01-394-2408	123	15
19207	12342966	5340-01-394-8496	123	15
19207	12343053	2540-01-383-5660	215	22
19207	12343054	7690-01-382-8471	238	14
19207	12343059	6160-01-384-3922	216	3
19207	12343059	6160-01-384-3922	217B	3
34623	12343061	2540-01-411-2130	230	4
34623	12343061	2540-01-411-2130	230A	4
19207	12343061	2540-01-411-2130	265F	3
19207	12343062	5340-01-408-6456	230	21
19207	12343063	5340-01-408-6460	230	19
19207	12356704	5930-01-183-6757	64	7
19207	12360865	5961-01-305-8848	57	8
19207	12367450	5340-01-329-8582	265D	17
7X677	12369198	2815-01-399-1020	6	1
7X677	12369199	2815-01-412-6760	6	1
19207	12375837	6220-01-372-3883	58	4
19207	12375838		58	5
19207	12375841	6220-01-359-2870	58	10
34623	12380007	3020-01-482-1834	42	18
34623	12380007	3020-01-482-1834	42A	4
34623	12380024	3020-01-480-8698	42	17
34623	12380024	3020-01-480-8698	42A	3
19207	12446700	2540-01-383-5232	213	2
19207	12446701	2540-01-384-1012	213	22
19207	12446702	2540-01-384-1028	213	23
19207	12446706	5340-01-473-4800	225	4
34623	12446709	2540-01-447-3457	215	5
34623	12446714	2540-01-381-8988	215	14
19207	12446724	5340-01-387-0090	215	1

CAGE	PART NUMBER	STOCK NUMBER	FIG.	ITEM
19207	12446730	5340-01-457-1778	196B	17
19207	12446730	5340-01-457-1778	196G	38
19207	12446735	5365-01-380-7340	216	4
19207	12446735	5365-01-380-7340	217B	4
19207	12446736	5365-01-382-1178	162	18
19207	12446736	5365-01-382-1178	216	12
19207	12446736	5365-01-382-1178	217B	13
19207	12446737	6160-01-384-0325	216	2
19207	12446737	6160-01-384-0325	217B	2
34623	12446747	2540-01-381-2079	215	16
9C234	12446748	2540-01-381-5397	215	11
19207	12446751	4820-01-431-2499	31	10
19207	12446765	5340-01-476-4374	232	3
19207	12446770	5340-01-457-0459	163	30
19207	12446770	5340-01-457-0459	163A	31
19207	12446772	2590-01-421-8480	223	12
19207	12446772	2590-01-421-8480	223A	8
19207	12446803	2530-01-411-2729	133	7
19207	12446811	3990-01-411-6575	203	7
19207	12446812	5340-01-415-8672	203	2
34623	12446819	2540-01-410-8793	234	4
19200	12446824	5340-01-414-0701	68	1
34623	12446860	2540-01-410-8794	230A	7
34623	12446878	2510-01-414-7846	210A	4
19207	12446879	2510-01-413-3360	212	12
19207	12446899	5340-01-408-6462	203	5
19207	12446900	5340-01-408-6458	203	6
19207	12446907	2510-01-456-7889	204	3
19207	12446908	2510-01-546-6530	205A	1
34623	12446928	2590-01-410-9968	156	2
19207	12446954	5310-01-472-3763	215	8
19207	12446968	2590-01-473-2700	216	16
19207	12446987	3990-01-432-5370	158	19
19207	12446987	3990-01-432-5370	182	13
19207	12446987	3990-01-432-5370	183	11
19207	12446987	3990-01-432-5370	207A	15
19207	12446987	3990-01-432-5370	207B	33
19207	12446988	2510-01-410-7169	158	27
19207	12446989	5340-01-408-8523	149	15
19207	12446990	5340-01-408-8529	149	15
19207	12447003	7690-01-476-6510	51	7
19207	12447003	7690-01-476-6510	238	10
19207	12447003	7690-01-476-6510	51A	8
19207	12447005	2510-01-510-0981	51	1
19207	12447005	2510-01-510-0981	51A	1

CROSS REFERENCE INDEXES
PART NUMBER

CAGE	PART NUMBER	STOCK NUMBER	FIG.	ITEM
19207	12447007	2540-01-474-3217	233	12
34623	12447012	2540-01-444-6642	232	25
19207	12447013	5340-01-470-2069	232	23
19207	12447027	5305-01-449-1983	133	31
34623	12447046	2540-01-447-2236	232	13
19207	12447047	2540-01-474-8562	232	30
19207	12447047	2540-01-474-8562	287A	6
34623	12447050	2540-01-444-5340	232	40
34623	12447050	2540-01-444-5340	287A	8
19207	12447051	5340-01-484-7646	143A	14
19207	12447053	2510-01-412-4969	141	13
19207	12447053	2510-01-412-4969	141A	21
19207	12447058	3120-01-440-0043	253	9
19207	12447076	4820-01-456-6257	100	22
19207	12447076	4820-01-456-6257	100A	29
34623	12447077	4730-01-409-1204	100	21
34623	12447077	4730-01-409-1204	139	10
34623	12447077	4730-01-409-1204	100A	18
34623	12447077	4730-01-409-1204	138A	28
19207	12447078	2540-01-411-3946	130	10
19207	12447083	6220-01-408-7785	54	1
19207	12447084	6220-01-445-5058	54	12
34623	12447088	2590-01-444-3399	253	15
19207	12447091	2540-01-412-8610	148	8
19207	12447091	2540-01-412-8610	256	4
19207	12447092	2590-01-412-7564	148	18
34623	12447093	2590-01-412-9560	148	18
19207	12447104	2590-01-448-6351	253	8
19207	12447104	2590-01-448-6351	256	11
19207	12447109	2920-01-420-9968	46	1
34623	12447130	2540-01-444-6615	232	41
34623	12447143	2540-01-465-9030	266A	9
34623	12447143	2540-01-465-9030	266B	13
19207	12447146	5340-01-466-1982	266B	10
19207	12447148	5340-01-466-4086	266B	20
19207	12447149	5310-01-465-9727	266B	19
34623	12447150	2590-01-466-3866	266C	7
19207	12447151	2590-01-466-3824	266C	4
19207	12447164	9515-01-478-6343	266B	5
19207	12447165	5340-01-412-0867	127	6
19207	12447165	5340-01-412-0867	99A	9
34623	12447166	4710-01-413-8230	127	3
34623	12447171	2590-01-448-1105	259	1
19207	12447172	5330-01-447-4762	87	4
34623	12447175	2520-01-464-1772	87	1

CAGE	PART NUMBER	STOCK NUMBER	FIG.	ITEM
19207	12447176	3040-01-409-2502	85	3
19207	12447177	5307-01-450-3072	101	11
19207	12447177	5307-01-450-3072	141	8
19207	12447177	5307-01-450-3072	101A	12
19207	12447177	5307-01-450-3072	141A	23
34623	12447178	3040-01-410-8054	85	5
34623	12447180	3040-01-439-3662	101	4
34623	12447182	3040-01-410-9965	85	8
7X677	12456133	5331-01-472-8177	26	2
7X677	12456409	5330-01-398-3727	KITS	10
7X677	12458122	2910-01-399-1848	18	1
19207	12460066		85	11
19207	12460067	3040-01-409-2501	106	4
19207	12460070	6150-01-413-7946	67	1
19207	12460083	5340-01-413-2689	35	16
34623	12460087	2990-01-411-2728	35	1
34623	12460090	2990-01-411-3947	35	18
19207	12460093	5340-01-413-4486	88	25
19207	12460095	5330-01-413-2118	88	27
34623	12460102	2910-01-412-0047	28	31
34623	12460104	2910-01-411-2124	28	1
34623	12460105	2910-01-447-3911	28	13
19207	12460116	5945-01-413-0886	56	14
19207	12460116	5945-01-413-0886	282A	3
19207	12460120	6150-01-412-7774	301	10
19207	12460130	5340-01-442-4876	78	1
19207	12460132	5935-01-412-9146	71	9
19207	12460136	5120-01-408-8173	301	12
19207	12460137	6150-01-410-8215	301	11
19207	12460143	2510-01-444-3360	28	21
34623	12460146	3040-01-409-2500	85	9
19207	12460151	2530-01-413-1365	114	6
19207	12460159	5305-01-412-5994	114	11
19207	12460167	2530-01-414-7844	114	6
19207	12460176	2530-01-493-5859	131	1
19207	12460199	5340-01-448-1213	267	5
19207	12460208	5365-01-457-8947	196B	23
19207	12460218	5340-01-466-2611	264	17
19207	12460219	5340-01-466-2606	264	19
19207	12460223	5305-01-471-7623	264	16
34623	12460224	2540-01-439-7308	33	22
19207	12460228	5980-01-438-7452	52	2
34623	12460229	3040-01-444-5640	55	4
19207	12460230	2540-01-410-8789	55	3
19207	12460232	2530-01-423-1796	135	1

CAGE	PART NUMBER	STOCK NUMBER	FIG.	ITEM
19207	12460233	2590-01-455-9123	232	12
19207	12460235	2510-01-433-4421	144	12
19207	12460235	2510-01-433-4421	144A	11
19207	12460243	2540-01-432-9894	146	8
19207	12460243	2540-01-432-9894	147	8
19207	12460267	4710-01-434-3159	127	21
34623	12460268	2540-01-432-9899	146	11
19207	12460270	5340-01-432-4870	146	5
34623	12460273	5342-01-446-8954	45	4
19207	12460283	2510-01-466-3752	143	11
19207	12460284	2510-01-457-0949	144	20
19207	12460285	2510-01-413-8045	143	14
19207	12460290	5340-01-457-5571	196D	11
19207	12460300	5340-01-456-6554	25	43
19207	12460300	5340-01-456-6554	264	3
19207	12460301	4710-01-434-3037	126	34
19207	12460305	4730-01-481-6278	139	3
19207	12460307	5340-01-491-7144	264	6
34623	12460314	6680-01-416-0636	252	4
19207	12460329	5340-01-451-5903	266	14
19207	12460329	5340-01-451-5903	207B	11
19207	12460330	5342-01-459-4992	266	1
19207	12460330	5342-01-459-4992	204A	30
19207	12460331	5340-01-469-5774	266	7
19207	12460331	5340-01-469-5774	204A	34
19207	12460352	2530-01-420-7892	120	6
19207	12460361	5340-01-560-4377	167	17
19207	12460361	5340-01-560-4377	167A	13
34623	12460374	2520-01-267-7371	117	10
34623	12460375	2520-01-297-5200	117	8
19207	12460385	5365-01-469-6343	232	31
34623	12460386	2540-01-463-3097	232	33
19207	12460427	2990-01-473-9420	249B	6
19207	12460430	5340-01-473-6897	249B	25
19207	12460434	2540-01-455-9308	232	42
19207	12460437	4710-01-474-6875	249E	3
19207	12460438	4730-01-474-6940	249D	6
19207	12460477		1	2
19207	12460499		266A	3
19207	12460500		266A	11
19207	12460501		266A	5
19207	12460506	5340-01-457-0804	209A	4
34623	12460507	5340-01-472-8534	84	12
34623	12460509	4720-01-443-3033	126	26
34623	12460511	4720-01-443-8487	127	25

CROSS REFERENCE INDEXES
PART NUMBER

CAGE	PART NUMBER	STOCK NUMBER	FIG.	ITEM
34623	12460514	5340-01-433-0931	63	7
19207	12460518	5930-01-433-3142	63	6
34623	12460527	5330-01-433-5054	163A	2
34623	12460527	5330-01-433-5054	164A	6
19207	12460543	5340-01-474-3279	235	12
19207	12460544	5340-01-474-0954	235A	10
19207	12460549	4720-01-455-7830	14	6
34623	12460550	2540-01-466-6114	265	1
19207	12460559	2540-01-433-2545	142	13
34623	12460560	5325-01-445-6437	142	13
19207	12460941	4730-01-475-1191	249A	3
34623	12469024	5340-01-433-2746	142	14
34623	12469025	5330-01-456-8882	163A	1
34623	12469025	5330-01-456-8882	164A	10
19207	12469026	5340-01-434-2834	163	33
19207	12469026	5340-01-434-2834	163A	35
34623	12469027	5340-01-432-4879	164	17
34623	12469027	5340-01-432-4879	164A	16
19207	12469040	7690-01-475-1202	249C	6
19207	12469051		1	2
19207	12469052	5340-01-475-3147	249E	5
19207	12469054	4710-01-475-1227	249A	5
34623	12469055	5365-01-456-0730	28	19
34623	12469056	5365-01-456-5637	28	36
19207	12469058		249A	8
19207	12469061	4720-01-470-3076	140	24
19207	12469066	7690-01-474-5928	225F	8
19207	12469066	7690-01-474-5928	252H	5
19207	12469071	4720-01-455-7664	25	59
19207	12469072	2510-01-458-9496	25	53
19207	12469074	4720-01-455-7861	25	9
34623	12469075	2590-01-455-8986	25	42
19207	12469089		1	2
19207	12469106	3020-01-476-6520	137	4
19207	12469107	5340-01-481-0558	42	21
19207	12469107	5340-01-481-0558	273	12
19207	12469108	3020-01-458-0176	42	5
19207	12469108	3020-01-458-0176	273	5
19207	12469108	3020-01-458-0176	42A	5
19207	12469132	4710-01-432-9470	10	2
34623	12469143	6150-01-432-8489	75	1
34623	12469144	2590-01-443-0361	87	6
34623	12469145	6680-01-432-6884	87	10
34623	12469156	5977-01-193-9931	65	11
19207	12469169	5340-01-498-7964	149	8

CROSS REFERENCE INDEXES
PART NUMBER

CAGE	PART NUMBER	STOCK NUMBER	FIG.	ITEM
19207	12469177	2510-01-464-6652	166	1
19207	12469178	2510-01-464-6660	166	1
34623	12469187	5342-01-433-2737	273	13
34623	12469188	3040-01-445-9110	267	15
19207	12469190	2590-01-433-4219	29	22
19207	12469194	2540-01-518-3339	232	18
19207	12469209	2540-01-436-8436	217	4
19207	12469211		207	26
19207	12469212		207	7
34623	12469215	4730-01-491-8047	140	4
34623	12469216	4820-01-473-3580	126	13
34623	12469216	4820-01-473-3580	140	3
34623	12469217	5340-01-473-4031	126	14
34623	12469217	5340-01-473-4031	140	2
19207	12469224	4720-01-488-6218	117E	1
19207	12469225	4720-01-488-6220	140	19
19207	12469225	4720-01-488-6220	117E	8
19207	12469257	2510-01-432-3338	160	1
19207	12469270	5330-01-548-3654	207A	8
19207	12469270	5330-01-548-3654	207B	16
19207	12469273	7690-01-518-8174	238	8
19207	12469274	7690-01-518-8437	238	7
19207	12469280	5310-01-495-9438	161	22
34623	12469287	6150-01-433-1568	71	1
19207	12469288	2590-01-569-0708	39A	8
19207	12469290		78	7
34623	12469293	5340-01-485-6012	196G	22
19207	12469320	5340-01-493-7444	196G	46
34623	12469343	5340-01-501-0316	214	4
19207	12469345	2990-01-560-2546	35	4
19207	12469346	2590-01-560-2737	35	22
19207	12469350	2990-01-433-4422	35	25
19207	12469353	2990-01-497-1042	35	20
19207	12469359		252A	4
19207	12469361	2990-01-496-4023	250	10
19207	12469372	5340-01-475-3485	12	2
19207	12469372	5340-01-475-3485	12A	26
19207	12469373	5340-01-475-3480	12	2
19207	12469373	5340-01-475-3480	12A	26
19207	12469374	5340-01-565-7323	12A	8
19207	12469376	2510-01-560-3958	12	17
34623	12469377	5340-01-488-5609	36	3
19207	12469380	4710-01-473-1708	100	8
19207	12469380	4710-01-473-1708	100A	1
34623	12469381	5340-01-473-2704	36	3

CROSS REFERENCE INDEXES
PART NUMBER

CAGE	PART NUMBER	STOCK NUMBER	FIG.	ITEM
19207	12469382	5365-01-488-5615	36	2
19207	12469385	5340-01-485-5962	225A	13
19207	12469386	5340-01-485-7254	225G	4
19207	12469387	5340-01-485-5977	225G	5
34623	12469397	5310-01-498-7962	214	2
34623	12469398	5305-01-498-8398	214	3
19207	12469405	2540-01-196-4920	149	7
34623	12469411	5340-01-432-4878	142	16
34623	12469424	5330-01-486-4417	196G	61
34623	12469426	5310-01-457-3292	200F	21
19207	12469429	1005-01-485-6411	196C	10
34623	12469441	7690-01-433-1610	244	6
19207	12469455	5340-01-486-6138	225A	21
19207	12469461	4730-01-560-3024	126	16
19207	12469461	4730-01-560-3024	126A	2
19207	12469463	5340-01-488-5619	126A	17
19207	12469464	4710-01-488-5621	126A	35
19207	12469465	4710-01-488-5625	126A	1
34623	12469466	5340-01-488-5630	126	6
19207	12469471	3020-01-488-5635	138B	12
34623	12469472	3020-01-488-5638	43	3
34623	12469473	5365-01-488-5640	273A	8
34623	12469473	5365-01-488-5640	42A	11
34623	12469473	5365-01-488-5640	42B	7
19207	12469474	5340-01-488-5643	45A	5
34623	12469475	5340-01-488-6073	45A	1
19207	12469476	5340-01-497-2269	42A	6
34623	12469478	4710-01-488-6143	138A	1
34623	12469479	4710-01-488-6076	233	8
34623	12469486	5340-01-491-2205	42B	5
34623	12469489	4720-01-488-6156	138B	14
34623	12469491	4730-01-488-6163	233	42
34623	12469497	5340-01-488-6179	45A	6
34623	12469498	5340-01-488-6181	273A	5
34623	12469498	5340-01-488-6181	42A	8
19207	12469499	4720-01-488-6230	117F	1
19207	12469500	4720-01-488-6232	117F	2
19207	12469505	4710-01-536-3017	117D	1
19207	12469506	4710-01-488-6236	117D	2
19207	12469507	4710-01-488-6237	117E	4
19207	12469508	4710-01-488-6243	117E	9
19207	12469509	4710-01-488-6241	117B	4
19207	12469510	4710-01-488-6311	117B	3
19207	12469511	4720-01-488-6424	117C	1
19207	12469512	4720-01-488-6426	117A	2

CROSS REFERENCE INDEXES
PART NUMBER

CAGE	PART NUMBER	STOCK NUMBER	FIG.	ITEM
19207	12470152	1005-01-485-4456	196G	39
19207	12479192	6110-01-491-2158	54	8
19207	12480587	5340-01-566-3111	226A	5
19207	12480625	2590-01-571-7308	205C	4
19207	12480647		239	3
19207	12480656	5310-01-541-6845	113	6
19207	12480702	5340-01-543-1652	167B	52
19207	12480703	5340-01-543-1611	171	7
19207	12480703	5340-01-543-1611	166A	52
19207	12480725	2540-01-314-1189	230	7
19207	12480725	2540-01-314-1189	230A	7
19207	12480725	2540-01-314-1189	230B	11
19207	12480726	2540-01-314-1190	230	7
19207	12480726	2540-01-314-1190	230B	11
19207	12480727	2540-01-314-2101	230	9
19207	12480727	2540-01-314-2101	230B	12
19207	12480750	5305-01-542-4936	220A	12
19207	12480750	5305-01-542-4936	221B	14
19207	12480750	5305-01-542-4936	221C	9
19207	12480755	5310-01-541-9570	220A	7
19207	12480755	5310-01-541-9570	221B	10
19207	12480755	5310-01-541-9570	221C	15
19207	12480907	6150-01-555-7011	267A	12
19207	12480908	6150-01-555-7025	267A	11
19207	12480909	6150-01-555-7019	267A	9
19207	12480918	5340-01-565-7500	267A	10
34623	12480921	6680-01-554-4738	267A	13
34623	12480922	6115-01-554-4741	267A	7
19207	12484846	2540-01-500-3446	266D	3
19207	12484847	2540-01-500-0309	265E	7
19207	12484848	5340-01-500-5572	266D	9
19207	12484852	1005-01-500-3744	266D	4
19207	12484854	5340-01-500-5580	266E	3
19207	12485221	2540-01-545-7418	167E	13
19207	12485221	2540-01-545-7418	167H	16
19207	12485221	2540-01-545-7418	167T	30
19207	12485221	2540-01-545-7418	169J	28
19207	12489164	5340-01-525-1088	196G	3
19207	12506595	9905-01-567-4342	238	12
19207	12506596		238	16
19207	12506597	9905-01-567-3826	239	3
19207	12506598	9905-01-566-7762	238	12
19207	12506600	9905-01-566-7763	239	3
19207	12506602	9905-01-566-7761	239	3
19207	12506603	9905-01-566-7760	238	12

CAGE	PART NUMBER	STOCK NUMBER	FIG.	ITEM
19207	12506604	9905-01-567-4341	238	12
19207	12506605	9905-01-567-3824	239	3
19207	12506607	9905-01-567-3825	239	3
19207	12506608	9905-01-567-4340	238	12
19207	12506610	9905-01-567-3827	239	3
19207	12506611	9905-01-567-4343	238	12
19207	12506621		159	6
19207	12506639		156	18
19207	12506640		158	39
19207	12506645		157	24
19207	12506672	9905-01-555-8180	239	3
19207	12506674	7690-01-554-9199	238	12
19207	12506698	5305-01-573-9435	201L	39
19207	12506751		158	55
19207	12506760		159	5
19207	12506796		156	5
19207	12506889		225K	6
19207	12506890		225K	9
19207	12506891		225K	2
19207	12506911		225K	8
19207	12506912		225K	1
19207	12506923	5340-01-455-9885	142	18
19207	12506927	2530-01-558-2138	131A	1
19207	12506957		159	5
19207	12506958		157	24
7X677	12517006	3120-01-155-3517	6	8
01212	12517007	3120-01-165-4826	6	8
19207	12518361		141A	1
19207	12518385	5340-01-571-6258	209B	3
19207	12518386	2510-01-570-9641	209B	2
19207	12518390		209B	1
19207	12518392	2540-01-570-8995	201L	35
19207	12518417	5340-01-570-8969	205C	13
19207	12518418		205B	3
19207	12518419		205B	2
19207	12518420		205C	19
19207	12518421		205C	4
19207	12518423		205B	1
19207	12518425		205C	9
19207	12518432	2510-01-573-4328	201G	19
19207	12518435	5340-01-573-7882	201J	7
19207	12518459		201G	6
19207	12518464	2510-01-571-1368	201I	8
19207	12518473	2540-01-573-3780	201H	1
19207	12518474	2540-01-574-1950	201E	1

CROSS REFERENCE INDEXES
PART NUMBER

CAGE	PART NUMBER	STOCK NUMBER	FIG.	ITEM
19207	12518475		201D	1
19207	12518484		201J	8
19207	12518485		201J	1
19207	12518495		201F	3
19207	12518506		117G	6
19207	12518507		117H	5
19207	12518509		117G	2
19207	12518523	5365-01-571-8456	200A	6
19207	12518524	5365-01-573-8386	200B	12
19207	12518529		200B	1
19207	12518532		200B	3
19207	12518534	5365-01-571-7724	200C	17
19207	12518538		200D	1
19207	12518540	7690-01-571-4456	238A	6
19207	12518541	7690-01-571-6112	238A	4
19207	12518542	7690-01-571-4565	238A	1
19207	12518543	7690-01-571-7693	238A	3
19207	12518544	7690-01-571-3990	238A	2
19207	12518552	9905-01-571-8855	238	12
19207	12518554	9905-01-571-8856	239	3
19207	12518557	2530-01-563-8620	131A	1
19207	12518562	7690-01-571-5878	238A	5
19207	12518566	2540-01-573-2494	201G	14
19207	12518567	5365-01-573-3381	201G	22
19207	12518571		200H	1
19207	12518573	5340-01-573-9427	201P	1
19207	12518575	5340-01-571-6219	201M	7
19207	12518576	5340-01-571-8413	200G	13
19207	12518580		201M	10
19207	12518584	5340-01-570-9322	200H	5
19207	12518591	2590-01-570-9001	201M	8
19207	12518592		201M	4
19207	12518593	5340-01-570-9317	201G	7
19207	12518597		201L	1
19207	12518601	5365-01-571-5850	201L	41
19207	12518602		201L	2
19207	12518609	2590-01-571-8884	201O	1
19207	12518615	1450-01-573-2660	201K	1
19207	12518629	5340-01-573-9422	201K	43
19207	12518630	5340-01-571-8529	201K	37
19207	12518637	2510-01-573-6414	201K	21
19207	12518641	2590-01-573-8363	201K	23
19207	12518644		201K	44
19207	12518645		201K	46
19207	12518646	2510-01-574-4191	201K	5

CAGE	PART NUMBER	STOCK NUMBER	FIG.	ITEM
19207	12518653	2510-01-571-8433	201K	2
19207	12518655	2590-01-574-2934	201K	15
19207	12518660	4010-01-571-8807	201K	31
19207	12518670	5365-01-571-7848	200F	19
19207	12518671		200F	1
19207	12518673		200F	2
19207	12518678	2590-01-571-8477	200F	5
19207	12518679	5340-01-570-9622	200F	8
19207	12518680	2510-01-573-2854	200E	27
19207	12518683	2510-01-573-2854	200E	8
19207	12518684	5340-01-571-7747	200E	22
19207	12518712		201G	16
19207	12518720		113	33
19207	12518720		119	33
19207	12518725	5340-01-574-8286	201H	6
19207	12518728	5340-01-571-5549	200E	15
19207	12518730	2510-01-573-3898	200E	7
19207	12518731	5340-01-573-2730	200B	10
19207	12518734		200E	1
19207	12528644	5365-01-571-9831	200F	27
19207	12528651	5530-01-573-9469	201L	38
19207	12528770		149	20
19207	12528855		163	17
19207	12528859		65	2
19207	12528940		117H	4
19207	12528943		117H	3
19207	12529038		101A	18
19207	12529039		112	9
19207	12529075		116A	19
24617	12531692	3120-01-459-3844	4	2
7X677	12531693	3120-01-477-3639	4	2
7X677	12531694	3110-01-477-3640	4	2
7X677	12531695	3110-01-477-3642	4	3
7X677	12531696	3110-01-477-3645	4	3
7X677	12531697	3110-01-477-3643	4	3
7X677	12531698	3110-01-477-3644	4	4
7X677	12531699	3110-01-477-3646	4	4
7X677	12531700	3110-01-477-3647	4	4
7X677	12531702	3120-01-152-8201	4	2
7X677	12531703	3120-01-153-7545	4	2
7X677	12531704	5330-01-437-9216	KITS	9
7X677	12532429	2950-01-439-8169	26	3
7X677	12548430	4710-01-161-0138	20	13
7X677	12548430	4710-01-161-0138	BULK	37
7X677	12550059	2815-01-412-8161	6	2

CAGE	PART NUMBER	STOCK NUMBER	FIG.	ITEM
7X677	12550062	2815-01-412-8162	6	2
7X677	12550114	2990-01-439-8249	17	2
7X677	12550863	5310-01-462-4459	20	17
24617	12550985	2815-01-469-2644	3	2
7X677	12551591	5330-01-434-8611	39	2
7X677	12551591	5330-01-434-8611	39A	2
7X677	12551755	2815-01-430-2599	11	22
7X677	12552171	5306-01-486-2891	3	25
7X677	12553066	5307-01-438-2319	15	1
7X677	12553121		3	9
7X677	12553155	5340-01-437-4983	26	7
7X677	12553484	2930-01-444-6649	41	4
7X677	12553488	5330-01-476-3866	41	3
34623	12553673	4710-01-502-5609	3	31
7X677	12553853	2815-01-494-9210	3	1
7X677	12554091	2930-01-460-7507	39	18
7X677	12554091	2930-01-460-7507	39A	21
7X677	12554092	2815-01-455-8424	63	12
7X677	12554094	4710-01-460-9630	20	9
7X677	12554344	5306-01-438-2322	15	2
7X677	12554488	2990-01-426-4425	63	8
11862	12554629		20	5
7X677	12554808	5325-01-549-9716	21	12
7X677	12554835	4710-01-446-9570	21	1
7X677	12555490		3	9
7X677	12555504	4930-01-477-3638	3	26
7X677	12555733		15	6
24617	12556031	5330-01-485-6499	3	8
7X677	12556822	2815-01-435-1707	3	1
7X677	12558081	5365-01-162-3797	3	13
7X677	12559337	6685-01-444-9478	39	1
7X677	12559337	6685-01-444-9478	39A	1
7X677	12559372		3	9
7X677	12559800	4730-01-493-3828	11	11
7X677	12559801	5340-01-493-2569	11	18
7X677	12560223	5330-01-472-8179	19	4
7X677	12560960	2815-01-147-4200	7	18
7X677	12561306	5330-01-484-1471	26	8
7X677	12561421		3	9
7X677	12564564	2815-01-148-9533	9	1
7X677	12567769	2815-01-512-2230	11	9
7X677	12584002	3110-01-413-8094	102	6
34281	12821501	2530-01-462-8079	124	22
34281	12821501	2530-01-462-8079	125	12
34281	12821801	2530-01-462-8068	125	12

CAGE	PART NUMBER	STOCK NUMBER	FIG.	ITEM
19200	13014372	2540-01-550-7387	265D	15
19200	13014373	2540-01-550-7253	265D	15
19200	13014374	2540-01-550-7386	265B	4
19200	13014375	2590-01-563-4687	265D	11
19200	13014376	5340-01-563-8469	265C	9
19200	13014377	3120-01-564-2279	265E	8
19200	13014378	2540-01-563-4524	265E	12
19200	13014379	2590-01-563-2401	265E	9
19200	13014380	2590-01-563-3670	265E	13
19200	13014381	2590-01-563-4901	265E	14
19200	13014382	2540-01-563-6583	265D	7
19200	13014383	2540-01-563-3917	265C	9
19200	13014384	6650-01-550-7534	265A	8
19200	13014388	2590-01-563-3359	265B	16
19200	13014389	2590-01-563-2468	265H	1
19200	13014390	6650-01-550-7525	265A	4
19200	13014393	6650-01-550-7555	265A	4
19200	13014395	2590-01-563-3664	265E	5
19200	13014397	2590-01-563-4933	265E	5
19200	13014398	2590-01-563-5219	265A	11
19200	13014399	2590-01-564-2161	265A	7
19200	13014402	5340-01-564-2281	265F	6
19200	13014403	5325-01-563-3845	265B	9
19200	13014404	5975-01-563-3002	265D	14
19200	13014405	2590-01-563-2960	265D	9
19200	13014407	2540-01-563-5854	266D	14
19200	13014411	2590-01-563-6505	265A	3
19200	13014412	2590-01-563-5835	265A	12
19200	13014413	2540-01-550-7246	265L	1
19200	13014414	9905-01-563-9863	265B	8
19200	13014416		265D	16
19200	13014420	2540-01-564-2115	265E	1
19200	13015465	2540-01-563-3748	265L	5
19200	13015468	2540-01-560-5014	265L	4
19200	13015469	2540-01-563-3696	265L	3
19200	13015470	2540-01-563-3475	265L	2
19200	13015473	2510-01-563-5000	265L	6
19200	13015474	2540-01-564-1622	265L	9
19200	13015481	2540-01-563-4661	265L	10
19200	13015487	2590-01-563-5079	265L	8
19200	13015488	5340-01-563-3719	265L	7
19200	13018185	2540-01-558-5467	265L	KIT
18876	13493198	6150-01-457-2964	200G	4
7X677	14003948	5305-01-164-6320	9	9
7X677	14003974	2805-01-142-2631	7	15

CAGE	PART NUMBER	STOCK NUMBER	FIG.	ITEM
7X677	14022640	2815-01-147-4201	7	19
7X677	14022643	5365-01-150-1386	8	15
7X677	14022644	3120-01-152-2612	8	16
7X677	14022645	3020-01-149-5915	8	7
7X677	14022647	3020-01-155-5779	8	6
7X677	14022648	5310-01-149-0870	8	4
7X677	14022649	5330-01-156-5147	11	7
7X677	14022650	5342-01-160-4397	11	5
7X677	14022652	3020-01-148-8846	8	2
7X677	14022653	3020-01-148-9547	8	5
7X677	14022663		3	24
7X677	14022670	5315-01-149-9712	3	27
7X677	14022672	5305-01-148-3686	4	10
7X677	14022699	3040-01-163-7208	11	8
7X677	14022700	4730-01-150-0879	13	6
7X677	14025512	5360-01-175-7269	7	11
7X677	14025515	5365-01-154-1484	7	9
7X677	14025517	5340-01-166-5640	3	3
7X677	14025523	2815-01-150-2198	6	4
7X677	14025525		6	6
7X677	14025526	5306-01-165-2425	6	5
7X677	14025527	5310-01-165-3333	6	7
7X677	14025557	5330-01-150-1215	18	2
7X677	14028918	2930-01-147-4198	39	3
7X677	14028918	2930-01-147-4198	39A	3
7X677	14028922	5306-01-149-6278	16	2
7X677	14028942	5325-01-151-6117	11	3
7X677	14032383	5340-01-462-3446	20	4
7X677	14033818	5307-01-154-9586	9	3
7X677	14033820	2815-01-148-6966	9	13
7X677	14033824	5340-01-159-6626	21	18
7X677	14033895	5340-01-151-9957	21	4
7X677	14033927	2815-01-163-7189	7	14
7X677	14033946	5307-01-150-1227	39	5
7X677	14033946	5307-01-150-1227	39A	7
7X677	14037958	5330-01-159-2811	102	25
7X677	14037981	5325-01-157-6764	103	41
7X677	14042575	2805-00-155-7263	7	7
7X677	14045230	5306-01-492-5668	8	1
7X677	14045263	5307-01-150-1549	9	15
7X677	14045274	5340-01-164-6436	3	5
7X677	14048454	3120-01-152-5945	8	12
7X677	14048455	3120-01-152-8200	8	11
7X677	14048456	3120-01-157-0914	8	10
7X677	14048457	3120-01-152-5946	8	9

CROSS REFERENCE INDEXES
PART NUMBER

CAGE	PART NUMBER	STOCK NUMBER	FIG.	ITEM
7X677	14050422	5306-01-185-7050	26	1
7X677	14050425	5315-01-151-4180	19	5
7X677	14050444	4730-01-164-7028	25	12
7X677	14050658	2815-01-163-7190	7	14
7X677	14053400	3120-01-173-3728	4	3
7X677	14055002	3120-01-152-1989	4	4
7X677	14055003	3120-01-177-3064	4	4
7X677	14055004	3120-01-181-7938	4	4
7X677	14056165	5306-01-148-3666	39	10
7X677	14056165	5306-01-148-3666	39A	11
7X677	14057296	2815-01-172-6780	7	3
7X677	14060130	5305-01-243-3759	45	16
7X677	14066301	5342-01-166-1534	21	16
7X677	14066307	5307-01-150-5992	11	26
7X677	14066308	2815-01-148-6971	8	14
7X677	14066310	2815-01-166-0621	3	19
7X677	14071059	2590-01-147-4285	11	2
7X677	14071080	5307-01-178-7445	41	9
7X677	14077157	2815-01-148-3771	5	1
7X677	14077192	5306-01-149-9668	3	21
7X677	14077194	5306-01-410-8159	3	7
7X677	14098632	4710-01-412-8611	21	10
7X677	14098633	4710-01-412-8615	21	20
7X677	14098634	4710-01-412-1669	21	11
7X677	14098635	4710-01-411-8488	21	15
7X677	14098636	4710-01-411-8489	21	13
7X677	14098637	4710-01-412-1667	21	17
34623	14098638	4710-01-411-8492	21	14
92867	15541800	2590-01-265-3185	123	3
92867	15541802	2590-01-323-5153	123	8
7X677	15728527	5306-01-455-8016	35	34
92867	15844902	2530-01-566-1790	123A	27
92867	15844903	2530-01-566-0648	123A	24
16764	16196390	5940-01-430-2764	56	6
7X677	16244697	5962-01-431-5121	56	8
1LW55	16251212	5962-01-440-0369	56	8
0NJT4	16266438	5962-01-470-4621	56	8
7X677	18009096	3120-01-152-4239	4	2
7X677	19439511	5310-01-444-0605	126	8
15946	22515630	5307-01-150-9538	21	6
15946	22515630	5307-01-150-9538	25	15
7X677	22548601	5307-01-150-5993	9	6
7X677	23500006	5307-01-187-0519	11	17
7X677	23500008	2910-01-189-8851	11	11
72825	23500024		20	11

CAGE	PART NUMBER	STOCK NUMBER	FIG.	ITEM
7X677	23500032	5307-01-207-9004	41	8
7X677	23500074	2815-01-148-9540	7	1
7X677	23500075	3040-01-192-4466	7	2
7X677	23500076	3040-01-212-7616	7	5
7X677	23500111	3120-01-175-3813	4	3
7X677	23500298	5325-01-234-0447	6	3
7X677	23500801	5306-01-422-8649	63	9
7X677	23500805	2990-01-411-6556	9	14
72582	23502073	2815-01-168-7871	11	9
7X677	23502552	5330-01-315-7047	7	10
7X677	23502571		3	23
7X677	23502575	5306-01-438-2320	3	22
7X677	23502587	5330-01-378-8572	11	27
7X677	23502596	2815-01-411-3964	4	6
7X677	23503124	5325-01-160-4618	21	21
7X677	23503969	5330-01-378-8577	4	5
7X677	23503994	2815-01-150-0673	7	17
7X677	23504011	5310-01-147-8744	4	9
72582	23521131	5310-01-250-7679	11	20
7X677	24200173	3040-01-447-7995	89	2
7X677	24200224	4730-01-460-5520	89	12
7X677	24200347	2590-01-460-8316	89	14
7X677	24200357	4320-01-456-6258	98	34
6X677	24200374	4710-01-477-3662	88	6
7X677	24200418	4820-01-474-8911	KITS	15
7X677	24200436	5360-01-476-2692	97	7
7X677	24200625		97	23
7X677	24200789	2520-01-459-5454	KITS	16
7X677	24200999		89	6
7X677	24201001		89	5
7X677	24201115	5330-01-456-2744	97	10
7X677	24201116	2520-01-456-6256	97	20
7X677	24201388	5330-01-456-7886	96	5
7X677	24201389		96	8
7X677	24201390		96	6
7X677	24202092	2520-01-456-5014	94	6
7X677	24202111	5330-01-410-7229	KITS	17
7X677	24202229	3040-01-480-7593	90	16
7X677	24202282	5340-01-456-2741	95	19
7X677	24202346		90	9
7X677	24202357	5331-01-480-0748	94	26
7X677	24202358	5331-01-414-4161	94	22
7X677	24202359		92	5
7X677	24202360	5330-01-478-5994	93	13
7X677	24202361	5330-01-478-3900	93	14

CAGE	PART NUMBER	STOCK NUMBER	FIG.	ITEM
7X677	24202552	2520-01-474-8868	93	12
7X677	24202577	5315-01-456-2737	95	7
7X677	24202578	5315-01-456-2739	95	7
7X677	24202579	5315-01-456-6254	95	7
7X677	24202580	5315-01-456-2738	95	7
7X677	24202581	5315-01-456-2740	95	7
7X677	24202582	5315-01-456-7882	95	7
7X677	24202583	5315-01-456-2743	95	7
7X677	24202611	5360-01-461-4931	89	9
7X677	24202631	3040-01-480-7595	91	15
7X677	24202646	2520-01-150-3932	91	3
7X677	24202646	2520-01-150-3932	92	16
7X677	24202681		98	17
7X677	24202928		95	12
7X677	24202957		96	2
11862	24202959		96	23
7X677	24202963	2520-01-456-7888	97	9
7X677	24202966	2520-01-456-7883	93	7
7X677	24202976	2520-01-460-4961	93	11
7X677	24202985	3040-01-456-7881	95	16
7X677	24202986	5365-01-456-2742	95	10
7X677	24202987	5360-01-456-2745	95	13
7X677	24203366		88	2
7X677	24203377		88	20
7X677	24203384		91	12
7X677	24203397	3020-01-480-7299	90	8
7X677	24203398	3020-01-480-7630	90	17
7X677	24203399	3020-01-480-7321	90	17
7X677	24203400	3040-01-480-7309	90	13
7X677	24203499		92	3
7X677	24203511		93	16
61928	24203876	2990-01-399-1023	88	11
7X677	24204253	5330-01-478-5993	97	10
7X677	24204266		96	2
7X677	24204268	5330-01-473-8584	97	8
7X677	24204270	2520-01-475-9665	97	9
7X677	24204275	4710-01-477-9032	97	15
7X677	24204276	5340-01-491-7497	97	17
7X677	24204278	2520-01-482-4280	KITS	18
7X677	24204287	2520-01-409-1767	94	19
7X677	24204291	3040-01-480-7591	90	22
7X677	24204303	2520-01-465-8809	98	9
7X677	24204304		98	17
7X677	24204441	5330-01-398-3724	KITS	19
7X677	24204449		KITS	20

CAGE	PART NUMBER	STOCK NUMBER	FIG.	ITEM
7X677	24204472	1005-00-049-9324	KITS	21
7X677	24204497	2520-01-456-2736	93	6
7X677	24204835	2520-01-460-8323	86	1
7X677	24204957	2520-01-478-6604	92	7
7X677	24204961	2520-01-474-8871	91	8
7X677	24204962		90	10
7X677	24205102	4730-01-177-7501	88	5
7X677	24205103	5340-01-474-4011	88	4
7X677	24205103	5340-01-474-4011	100	24
7X677	24205103	5340-01-474-4011	100A	16
7X677	24205123	5330-01-480-2502	88	21
72590	24205225		88	1
7X677	24205250	3040-01-462-1286	KITS	22
24617	24205251	5330-01-442-2874	KITS	23
7X677	24205348	2520-01-460-8301	KITS	24
7X677	24205551	2520-01-149-7861	KITS	25
7X677	24205552	2520-01-474-7051	KITS	26
7X677	24205560	2520-01-481-8479	91	11
7X677	24205560	2520-01-481-8479	92	17
7X677	24205722		93	15
7X677	24205778		98	5
7X677	24205786		98	7
7X677	24205833	5331-01-477-6762	98	32
7X677	24206024		97	24
7X677	24206749	5340-01-408-8525	KITS	27
7X677	24207013	4730-01-560-3083	88	7
7X677	24207168		88	2
7X677	24207180		93	17
7X677	24207247	3040-01-480-7297	90	7
7X677	24207501		92	4
72590	24208605		88	1
7X677	24208848	3110-01-478-4266	KITS	28
7X677	24208849	2520-01-481-8460	KITS	29
7X677	24208852	4320-01-485-7480	98	3
7X677	24209112	2520-01-488-7016	97	12
7X677	24209225		91	5
7X677	24209244		91	13
7X677	24209475	3020-01-480-7302	90	8
7X677	24210468		88	17
7X677	24210605	5330-01-324-0906	98	6
7X677	24210864	5950-01-480-5374	96	30
7X677	24210954	3010-01-480-7597	KITS	30
7X677	24210955	5330-01-480-0752	KITS	31
7X677	24210956	4330-01-496-5720	KITS	32
7X677	24211287	4320-01-485-7480	98	3

CROSS REFERENCE INDEXES
PART NUMBER

CAGE	PART NUMBER	STOCK NUMBER	FIG.	ITEM
72590	24211292		88	1
7X677	24212051		90	9
7X677	24213991	5365-01-480-6812	88	23
72590	24214094		88	1
72590	24214664		88	1
7X677	24219329	2520-01-480-7553	86	1
7X677	24220158	5945-01-478-7862	96	26
7X677	24222077	5930-01-456-7880	97	13
7X677	24222158	2520-01-410-8079	94	5
7X677	24222160	3010-01-460-8309	94	14
7X677	24222173	2520-01-410-8078	92	2
7X677	24222184	2835-01-478-4268	94	2
7X677	24230288	5950-01-480-5380	96	14
7X677	24230344	6150-01-470-2011	82	1
7X677	24242073	2520-01-459-8532	97	12
7X677	25014006	4820-01-436-9135	3	17
7X677	25042462	2990-01-147-9284	14	9
70040	25043364	4820-01-192-7678	251	18
70040	25055210	4730-01-189-8854	28	11
7X677	25161285	4820-01-440-7461	3	18
7X677	26045801	2815-01-480-7632	11	6
7X677	26056747	2530-01-123-8787	KITS	34
7X677	26095243	6680-01-152-2845	138	1
73342	29505789	5365-01-378-1755	11	23
73342	29520052	5310-01-143-0512	101	8
73342	29520052	5310-01-143-0512	101A	9
73342	29530330	2520-00-172-1947	91	4
0ZM57	70061338		150A	3
0ZM57	70061342	5315-01-542-3872	150A	28
0ZM57	70061343	5315-01-542-4594	150A	24
82654	75000317	2590-01-176-1177	BULK	49
61928	88894036	2930-01-493-6007	41	2
0ZM57	90171135		150A	14
92867	95001418	5340-01-213-5600	122	1
92867	95001418	5340-01-213-5600	123A	10
81300	6496610019	4720-01-186-2358	BULK	16
73002	9781210307	4720-01-505-4702	138A	30
34623	0 204 022 603	2530-01-357-9708	129	1
53867	0 204 032 538	2530-01-357-9776	128	1
60602	000-49005-1224	5340-01-290-8360	33	10
6W728	01-02043		276B	1
6W728	01-02078	4730-01-460-4960	288	15
6W728	01-02420	4720-01-460-9071	BULK	9
6W728	01-02420-AR		281	14
6W728	01-02420-AR		284	10

CAGE	PART NUMBER	STOCK NUMBER	FIG.	ITEM
6W728	01-02420-AR		288	14
6W728	01-02694	5975-01-500-1773	276C	7
6W728	01-04114	4730-01-460-2425	284	12
6W728	01-04776	2540-01-420-7902	275	5
6W728	01-04783	2540-01-420-7906	275	4
6W728	01-05082	2540-01-460-4953	287	2
6W728	01-05083	4940-01-461-7809	288	12
6W728	01-05086	2540-01-460-4952	286	13
6W728	01-05098	2510-01-460-4959	281	11
6W728	01-05132	5325-01-465-3881	281	7
6W728	01-05133	2540-01-460-4957	288	18
1FP59	012333-3	5310-00-637-9541	249C	2
53867	02040C2314	2530-01-566-2481	129	1
53867	02040C2315	2530-01-568-5097	128A	6
6W728	03-00333	4130-01-460-5782	282	1
70082	0462A	2540-01-487-3616	230A	7
6W728	07-00260	4130-01-460-2456	279A	2
6W728	07-00453	4130-01-512-6676	274	4
09647	07687-2	6150-01-361-8129	70	15
6W728	08-00124	5340-01-475-4027	285	4
6W728	08-00257	4820-01-422-5523	285	3
34281	091247-01	5310-01-185-8690	124	19
34281	091247-01	5310-01-185-8690	125	16
34281	092554-01	5330-01-184-5421	124	12
34281	092554-01	5330-01-184-5421	125	8
6W728	1000011-000	5365-01-513-4522	201A	6
6W728	1000011-000	5365-01-513-4522	201C	9
6W728	1000028-002	4720-01-560-3940	249J	2
6W728	1000039-002	2540-01-513-4066	249G	10
6W728	1000049-003-1.75		265K	6
6W728	1000070-002	5340-01-560-3070	249I	17
6W728	1000074-022		229	3
6W728	1000078-002	5340-01-499-1716	269A	13
6W728	1000079-002	5340-01-560-2658	249G	16
6W728	1000088-002	5340-01-499-1827	269A	7
6W728	1000090-003	5340-01-513-4912	249G	12
6W728	1000090-006	5340-01-513-4910	249G	13
6W728	1000090-007	5340-01-513-4908	249G	11
6W728	1000109-033	5305-01-513-5713	249I	4
6W728	1000109-033	5305-01-513-5713	249J	10
6W728	1000111-007		BULK	44
6W728	1000111-007-12		249I	1
6W728	1000125-010	2815-01-513-4025	249G	6
6W728	1000125-011	2815-01-513-4050	249G	1
6W728	1000125-012	2815-01-513-4054	249G	15

CAGE	PART NUMBER	STOCK NUMBER	FIG.	ITEM
6W728	1000125-013	2815-01-513-4060	249G	17
6W728	1000125-014	2815-01-513-4065	249G	8
6W728	1000125-015	5330-01-560-3105	249G	18
6W728	1000138-000	2540-01-500-2113	269A	16
6W728	1000139-000	2540-01-500-2122	269A	15
6W728	1000143-002	5340-01-499-1451	269A	5
6W728	1000176-000	2540-01-500-2092	269A	3
6W728	1000204-002	5340-01-499-1758	269A	14
6W728	1000205-002	5340-01-513-4907	269A	10
6W728	1000214-001		BULK	43
6W728	1000214-018		170	3
6W728	1000214-024		170	23
6W728	1000319-002	5340-01-530-0943	171	11
6W728	1000320-002	5340-01-519-3845	171	11
6W728	1000321-002	2510-01-520-3995	171	15
6W728	1000322-002	5340-01-521-4569	171	16
6W728	1000324-002	5340-01-560-3210	198A	4
6W728	1000325-002	5310-01-557-8296	198A	6
6W728	1000325-002	5310-01-557-8296	265H	9
6W728	1000326-000	5340-01-560-2707	198A	5
6W728	1000349-000	5305-01-560-2360	169	8
6W728	1000349-000	5305-01-560-2360	167E	11
6W728	100035-002	5340-01-518-2955	276C	4
6W728	1000371-000	5330-01-560-3987	197	16
6W728	1000440-002	5340-15604466	249G	3
6W728	1000440-002	5340-15604466	249J	5
6W728	1000441-002	4720-01-560-3459	249J	11
6W728	1000443-200M1	5340-01-556-1397	192	23
6W728	1000443-200M1	5340-01-556-1397	193	20
6W728	1000443-200M1	5340-01-556-1397	194	6
6W728	1000443-200M1	5340-01-556-1397	194	7
6W728	1000443-200M1	5340-01-556-1397	195	16
77820	10-042622-23S	5935-00-614-3959	76	4
39BV2	100-AA	2640-00-050-1229	131	9
39BV2	100-AA	2640-00-050-1229	131A	10
28891	101450-S02	5940-01-214-4563	73	10
1S0R6	103700-09	2530-01-484-9574	125	2
1S0R6	103700-10	2530-01-484-9573	125	2
34281	103705-01		125	7
34281	103706-02		125	7
34281	103712-01	2530-01-185-7998	124	14
34281	103712-01	2530-01-185-7998	125	10
77820	10-40704-28	5310-00-771-6722	167H	10
34281	104534-01	2530-01-185-6713	124	20
34281	104534-01	2530-01-185-6713	125	15

CAGE	PART NUMBER	STOCK NUMBER	FIG.	ITEM
34281	104870-01	2530-01-179-7511	KITS	7
54786	105600-001	5340-01-446-3124	215	23
54786	105610-1	5340-01-449-9309	216	13
54786	105610-1	5340-01-449-9309	217	2
54786	105610-1	5340-01-449-9309	217A	2
01989	1062X6X4	4730-01-184-4760	112	28
79470	1064X4	4730-01-003-5105	99	4
79470	1064X4	4730-01-003-5105	112	26
79470	1064X4	4730-01-003-5105	118	12
79470	1064X4	4730-01-003-5105	251	7
79470	1064X4	4730-01-003-5105	258	1
79470	1065X4	4730-01-058-0900	118	11
01276	1069X4X1	4730-01-195-3803	252	7
79470	1069X6	4730-00-041-2526	39	19
79470	1069X6	4730-00-041-2526	39A	22
79470	1069X6X2	4730-01-070-7680	251	3
01989	1077X4	4730-01-192-8086	112	19
01276	1077X4	4730-01-192-8086	44A	22
81343	10-8 430260C	4370-01-399-4206	117H	3
34281	108037-01	5365-01-186-7233	125	3
81343	10-8070102BA	4730-00-444-8489	13	9
81343	10-8070302C	4730-01-206-4810	13	10
51377	1090-06404-01	2930-01-168-7870	44	1
19200	10910174-16	5310-00-987-1294	189F	2
19200	10910174-16	5310-00-987-1294	189G	9
19200	10910174-16	5310-00-987-1294	189H	3
19200	10910174-16	5310-00-987-1294	189I	5
19200	10910174-16	5310-00-987-1294	189J	7
19200	10910174-16	5310-00-987-1294	189K	4
19200	10910174-16	5310-00-987-1294	189L	5
19200	10910174-16	5310-00-987-1294	189M	2
19200	10910174-16	5310-00-987-1294	189N	8
19200	10910174-16	5310-00-987-1294	189O	6
19200	10910174-16	5310-00-987-1294	189O	12
19200	10910174-16	5310-00-987-1294	189P	9
19200	10910174-16	5310-00-987-1294	195D	6
19200	10910174-16	5310-00-987-1294	195E	11
19200	10910174-16	5310-00-987-1294	195F	5
19200	10910174-16	5310-00-987-1294	195F	17
19200	10910174-16	5310-00-987-1294	195G	6
19200	10910174-16	5310-00-987-1294	195H	2
19200	10910174-16	5310-00-987-1294	195I	2
19200	10910174-16	5310-00-987-1294	195J	2
19200	10910174-16	5310-00-987-1294	195K	2
19200	10910174-16	5310-00-987-1294	202B	12

CROSS REFERENCE INDEXES
PART NUMBER

CAGE	PART NUMBER	STOCK NUMBER	FIG.	ITEM
19200	10910174-16	5310-00-987-1294	207B	22
19207	10910174-19	5310-00-964-3415	167H	33
19207	10910174-19	5310-00-964-3415	167U	4
19207	10910174-19	5310-00-964-3415	189E	6
19207	10910174-19	5310-00-964-3415	189N	5
19207	10910174-19	5310-00-964-3415	195D	16
19200	10910174-20	5310-00-058-1305	189E	15
19200	10910174-20	5310-00-058-1305	189J	23
19200	10910174-20	5310-00-058-1305	189N	15
19200	10910174-20	5310-00-058-1305	189O	21
19200	10910174-20	5310-00-058-1305	202A	3
19200	10910174-20	5310-00-058-1305	202B	2
19200	10910174-3	5310-00-877-5972	189I	26
19200	10910174-3	5310-00-877-5972	189O	3
19200	10910174-3	5310-00-877-5972	189P	19
19200	10910174-3	5310-00-877-5972	195F	7
19200	10910174-3	5310-00-877-5972	195G	2
19207	10910174-5	5310-00-866-4417	148	20
19207	10910174-5	5310-00-866-4417	253	5
19207	10910174-5	5310-00-866-4417	125A	15
19207	10910174-5	5310-00-866-4417	141A	13
19207	10910174-5	5310-00-866-4417	142A	15
34281	109413-01	4820-01-186-0822	127A	7
34821	109433-01		124	6
34281	109457-01	5305-01-276-4855	124	1
6W728	11-00257	6685-01-421-3549	284	7
6W728	11-00383		276B	5
6W728	11-00527	5930-01-420-7197	275	2
6W728	11-00576	5930-01-472-7762	273	22
6W728	11-00576	5930-01-472-7762	273A	22
6W728	11-00623	5930-01-521-0167	274	1
81851	1101001303M0359	5365-01-565-7625	123A	13
55026	1-112757	5940-00-050-7106	73	11
62161	1118BAC1048		299	8
29510	1125218C1	4720-00-065-8682	BULK	71
19207	11608950-14	4730-01-461-9362	25	19
19207	11608950-14	4730-01-461-9362	117E	5
19207	11608950-18	4730-01-296-9318	25	54
19207	11608950-18	4730-01-296-9318	250	22
19207	11608950-21	4730-01-545-9713	37	1
19207	11608950-6	4730-00-278-2523	275	15
19207	11614131-1	5930-00-134-5036	51	17
19207	11614131-1	5930-00-134-5036	51A	20
19207	11639519-1	5331-00-463-0200	57	10
19207	11639519-2	5331-00-462-0907	58	11

CAGE	PART NUMBER	STOCK NUMBER	FIG.	ITEM
19207	11655788-2	5120-00-240-8702	299	4
34281	120100-07		124	7
34281	120100-08		124	8
34281	120100-09		124	13
34281	120100-10		124	11
6W728	12-01393	6150-01-421-3550	275	1
6W728	12-01576	6150-01-460-2427	284	6
71468	120-1805-000	5935-01-153-9320	71	16
71468	120-1809-000	5935-01-152-6814	78	10
77060	12084912-L	5940-01-442-6298	78	3
51377	1210-09167-51	2930-01-565-8355	44A	16
34281	1215567-01	5340-01-265-8883	124	2
34271	121743-01		124	15
72794	1219-7250-Z3Y	5325-00-449-3001	165	5
72794	121J-740-C3C	5325-01-264-1522	166	3
19207	12258932-6	6685-01-167-4298	64	1
19207	12269868-2		69	8
19207	12296696-2	5305-01-271-1806	150	11
72794	122J-R7100-C3C	5325-01-191-7555	165	19
72794	122J-R790-Z3C	5325-01-255-1126	222	8
19207	12301363-1	2540-01-200-1994	226	9
19207	12301363-2	2540-01-203-7721	226	9
19207	12301363-2	2540-01-203-7721	249	20
19207	12301363-2	2540-01-203-7721	227C	9
19207	12331924-6		215	6
19207	12338072-1	7690-01-484-4111	243	6
19207	12338086-3	5995-01-201-7495	237	1
19207	12338089-3	5995-01-201-4129	237	2
34623	12338099-1	6150-01-207-8120	236	5
34623	12338099-1	6150-01-207-8120	237	9
19207	12338149-1	2510-01-189-0891	143A	15
19207	12338149-2	2510-01-187-7031	143A	15
19207	12338150-6	2590-01-395-2228	111	3
9C234	12338150-7	2590-01-395-2229	111	6
19207	12338151-6	5340-01-461-7851	116	6
34623	12338151-7	2590-01-394-8134	116	3
34623	12338155-1	2510-01-185-6647	143	18
19207	12338155-1	2510-01-185-6647	143A	11
34623	12338155-2	2510-01-185-6648	143	18
19207	12338155-2	2510-01-185-6648	143A	11
19207	12338186-52	5365-01-216-0364	200	38
19207	12338186-52	5365-01-216-0364	202	5
19207	12338186-52	5365-01-216-0364	196D	30
19207	12338186-52	5365-01-216-0364	202C	9
19207	12338186-69	5365-01-466-0850	266B	15

CAGE	PART NUMBER	STOCK NUMBER	FIG.	ITEM
19207	12338186-70		266A	4
19207	12338186-88	5365-01-488-5594	42B	8
19207	12338186-89	5365-01-495-5340	265	11
19207	12338191-1	2540-01-187-7034	142	25
19207	12338191-1	2540-01-187-7034	142A	19
19207	12338191-2	2540-01-188-3239	142	25
19207	12338191-2	2540-01-188-3239	142A	19
19207	12338225-1	5305-01-264-3602	148	13
19207	12338225-1	5305-01-264-3602	149	10
19207	12338226-2	5365-01-209-7832	145	3
19207	12338226-2	5365-01-209-7832	142A	9
19207	12338316-2	5360-01-179-4106	151	1
19207	12338316-4	5360-01-432-4721	151	1
19207	12338316-5	5360-01-457-8018	151	1
34623	12338330-1	4720-01-545-1965	100	1
34623	12338330-1	4720-01-545-1965	100A	5
19207	12338330-12		140	12
19207	12338330-14		100	9
19207	12338330-14		100A	4
34623	12338330-2	4720-01-409-2499	100	11
34623	12338330-2	4720-01-409-2499	100A	28
19207	12338330-4	4720-01-409-2506	100	7
19207	12338330-4	4720-01-409-2506	100A	6
19207	12338343-1	5340-01-212-3553	35	26
19207	12338343-2	5340-01-484-7760	35	3
19207	12338376-2-AR		166B	34
19207	12338428-2	6680-01-442-9413	267	2
19207	12338442-2	2520-01-249-1434	85	10
19207	12338442-2	2520-01-249-1434	106	3
19207	12338466-1	2510-01-534-2358	51	9
19207	12338521-1	5365-01-413-0275	208	23
19207	12338521-1	5365-01-413-0275	208	37
19207	12338521-1	5365-01-413-0275	208A	25
19207	12338548-2	4710-01-359-2956	28	6
19207	12338548-2	4710-01-359-2956	249D	1
19207	12338551-2	4720-01-212-8269	29	20
19207	12338557-1	5330-01-186-7757	28	35
19207	12338557-2	5330-01-187-5148	28	42
19207	12338558-1	5342-01-246-1120	29	25
19207	12338560-3		27	7
19207	12338561-2		27	20
19207	12338591-1	4720-01-394-3747	140	16
19207	12338696-1	5340-01-314-4951	80	4
19207	12338736-2		159	5
19207	12338736-3		159	5

CROSS REFERENCE INDEXES
PART NUMBER

CAGE	PART NUMBER	STOCK NUMBER	FIG.	ITEM
19207	12338740-1	2510-01-262-6007	157	12
19207	12338807-4		210A	6
19207	12338822-1	5342-01-186-7382	212	35
19207	12338822-1	5342-01-186-7382	210A	22
19207	12338822-2	5342-01-185-0116	212	55
19207	12338822-2	5342-01-185-0116	210A	35
19207	12338834-1	5340-01-185-6998	212	27
19207	12338834-2	5340-01-186-7594	212	11
19207	12338836-1	5340-01-186-7593	212	25
19207	12338836-2	5340-01-185-6997	212	10
19207	12338838-1	2590-01-262-7706	213	26
19207	12338838-2	2590-01-263-3254	213A	27
19207	12338839-1	5340-01-314-5957	180	6
19207	12338839-1	5340-01-314-5957	203	9
19207	12338839-1	5340-01-314-5957	205	7
19207	12338839-1	5340-01-314-5957	209	5
19207	12338839-1	5340-01-314-5957	212	14
19207	12338839-1	5340-01-314-5957	215	21
19207	12338839-1	5340-01-314-5957	223	15
19207	12338839-1	5340-01-314-5957	223	20
19207	12338839-1	5340-01-314-5957	224	3
19207	12338839-1	5340-01-314-5957	201J	2
19207	12338839-1	5340-01-314-5957	201L	6
19207	12338839-1	5340-01-314-5957	201O	4
19207	12338839-1	5340-01-314-5957	204A	4
19207	12338839-1	5340-01-314-5957	204B	10
19207	12338839-1	5340-01-314-5957	205C	15
19207	12338839-1	5340-01-314-5957	205C	18
19207	12338839-1	5340-01-314-5957	223A	5
19207	12338839-1	5340-01-314-5957	223A	11
19207	12338839-1	5340-01-314-5957	223A	17
19207	12338839-1	5340-01-314-5957	227A	4
19207	12338839-3	5340-01-434-1809	198	2
19207	12338839-3	5340-01-434-1809	205	33
19207	12338839-3	5340-01-434-1809	222	2
19207	12338839-3	5340-01-434-1809	223	6
19207	12338839-3	5340-01-434-1809	223	11
19207	12338839-3	5340-01-434-1809	224	9
19207	12338839-3	5340-01-434-1809	279	4
19207	12338839-3	5340-01-434-1809	196G	19
19207	12338839-3	5340-01-434-1809	197A	3
19207	12338839-3	5340-01-434-1809	200E	13
19207	12338839-3	5340-01-434-1809	200F	15
19207	12338839-4	5340-01-197-8673	208	13
19207	12338839-4	5340-01-197-8673	227	10

CROSS REFERENCE INDEXES
PART NUMBER

CAGE	PART NUMBER	STOCK NUMBER	FIG.	ITEM
19207	12338839-4	5340-01-197-8673	248	3
19207	12338839-4	5340-01-197-8673	201G	25
19207	12338839-4	5340-01-197-8673	208A	15
19207	12338839-4	5340-01-197-8673	227D	23
19207	12338839-6	5340-01-197-8674	208	34
19207	12338839-6	5340-01-197-8674	209B	7
19207	12338839-8	2510-01-199-5748	178	2
19207	12338839-8	2510-01-199-5748	227D	17
19207	12338841-1	2510-01-198-7413	212	34
19207	12338841-1	2510-01-198-7413	210A	23
19207	12338841-2	5340-01-203-8608	212	4
19207	12338945-1	2540-01-247-7915	165	34
19207	12338945-2	2540-01-247-7914	165	34
34623	12338952-1	5342-01-249-3502	165	31
19207	12338974-1	5340-01-260-9874	208	3
19207	12338974-1	5340-01-260-9874	208A	3
19207	12338974-2	5340-01-260-5792	208	3
19207	12338974-2	5340-01-260-5792	208A	3
19207	12338975-1	5340-01-186-1280	208	6
19207	12338975-1	5340-01-186-1280	208A	8
19207	12338975-2	5340-01-186-1281	208	6
19207	12338975-2	5340-01-186-1281	208A	8
19207	12338978-2	2540-01-209-6875	262	9
19207	12338981-1	2510-01-173-9316	208	10
19207	12338981-2	2510-01-378-5615	208	10
19207	12338981-2	2510-01-378-5615	208A	12
19207	12339015-1	2590-01-251-3070	213	16
19207	12339015-1	2590-01-251-3070	249J	9
19207	12339015-2	2590-01-251-3071	213A	6
19207	12339015-4	2590-01-251-3068	213	18
34623	12339015-4	2590-01-251-3068	213A	18
19207	12339015-5	2590-01-257-8788	213A	17
19207	12339025-1	5330-01-252-5377	156	25
34623	12339029-2	2540-01-192-5948	209	8
19207	12339031-1	5340-01-470-5892	157	15
19207	12339031-2	5340-01-433-6262	157	15
19207	12339036-1	2510-01-383-5444	70	6
19207	12339048-1	2590-01-197-5446	158	49
19207	12339147-2	4710-01-179-4346	252	5
19207	12339155-1	4720-01-186-6018	37	5
19207	12339155-3-15		249A	28
19207	12339155-3-25		249A	1
19207	12339166-1	2510-01-210-6939	38	1
19207	12339166-2	2990-01-210-4276	38	1
19207	12339196-1	2540-01-335-4482	158	3

CAGE	PART NUMBER	STOCK NUMBER	FIG.	ITEM
19207	12339203-1	6220-01-429-4596	52	13
34623	12339210-2	2520-01-214-2565	133	18
19207	12339227-1	2510-00-933-2893	208	7
19207	12339227-1	2510-00-933-2893	208A	9
19207	12339227-2	2510-00-933-2895	208	7
19207	12339227-2	2510-00-933-2895	208A	9
19207	12339228-9	5330-01-193-2338	208	9
19207	12339228-9	5330-01-193-2338	208A	11
34623	12339229-1	4010-01-217-7086	262	3
34623	12339229-2	4010-01-215-7466	262	3
19207	12339232-1	9515-01-185-3118	209	7
19207	12339244-1	5342-01-189-5452	155	5
19207	12339244-3	5340-01-209-7802	155	11
19207	12339247-1	5342-01-186-7236	155	6
19207	12339247-3	5342-01-406-6962	155	12
19207	12339248-1	5365-01-214-4987	155	13
19207	12339248-2	5310-01-252-7285	155	7
19207	12339248-2	5310-01-252-7285	155	15
19207	12339248-2	5310-01-252-7285	155A	3
19207	12339248-3	5310-01-476-9321	155	7
19207	12339248-3	5310-01-476-9321	155A	5
19207	12339249-1	5365-01-264-4023	155	4
19207	12339249-4		155	4
19207	12339251-1	4720-01-474-9105	249A	4
34623	12339265-3	4720-01-279-5149	275	16
34623	12339292-1	2910-01-184-5498	232	5
19207	12339293-1		233	4
19207	12339293-5.5		233	5
19207	12339294-2	5310-01-472-7476	225	5
19207	12339347-1	6150-01-185-8240	228	18
19207	12339347-1	6150-01-185-8240	228A	18
19207	12339347-2	6150-01-210-3596	228	18
19207	12339347-2	6150-01-210-3596	228A	18
19207	12339353-1	4820-01-359-9489	126	19
19207	12339353-1	4820-01-359-9489	126A	31
19207	12339355-2	5320-01-264-5978	158	14
19207	12339355-2	5320-01-264-5978	163	15
19207	12339355-2	5320-01-264-5978	163A	16
19207	12339374-1	2510-01-188-7381	166A	40
19207	12339374-1	2510-01-188-7381	167B	40
19207	12339374-2	2510-01-189-9748	166A	40
19207	12339374-2	2510-01-189-9748	167B	40
19207	12339376-1	7510-01-560-4927	BULK	73
19207	12339376-1-AR		215	13
19207	12339376-2		BULK	34

CROSS REFERENCE INDEXES
PART NUMBER

CAGE	PART NUMBER	STOCK NUMBER	FIG.	ITEM
19207	12339377-1	2540-01-201-2356	166A	9
19207	12339377-1	2540-01-201-2356	166B	11
19207	12339377-2	2540-01-201-2357	166A	9
19207	12339377-2	2540-01-201-2357	166B	11
19207	12339378-1	2510-01-199-1498	167B	9
19207	12339378-2	5340-01-197-4901	167B	9
19207	12339387-2	2540-01-198-7581	166A	29
19207	12339387-2	2540-01-198-7581	167E	8
19207	12339397-1	5305-00-051-4075	158	5
19207	12339397-3	5310-01-231-7455	25	44
19207	12339397-4	5340-01-213-4662	161	15
19207	12339397-6	5310-01-388-6205	25	46
19207	12339404-1	5340-01-203-0324	166A	18
19207	12339404-1	5340-01-203-0324	167B	18
19207	12339404-2	5340-01-195-9107	166A	18
19207	12339404-2	5340-01-195-9107	167B	18
19207	12339406-4	5307-01-465-5796	39	11
19207	12339406-4	5307-01-465-5796	39A	13
19207	12339409 R91	5330-01-525-7057	13	3
19207	12339416-1	2510-01-196-5316	166A	15
19207	12339416-1	2510-01-196-5316	167B	15
19207	12339416-2	5342-01-195-8039	166A	15
19207	12339416-2	5342-01-195-8039	167B	15
19207	12339419-2		166	7
19207	12339420-1	2590-01-253-3905	222	7
19207	12339448-1	5340-01-199-3498	139	2
19207	12339448-1	5340-01-199-3498	166A	6
19207	12339448-1	5340-01-199-3498	166B	2
19207	12339448-1	5340-01-199-3498	167B	6
19207	12339448-2	5340-01-197-8675	166B	2
19207	12339448-3	5340-01-204-2458	166A	6
19207	12339448-3	5340-01-204-2458	166B	22
19207	12339448-3	5340-01-204-2458	167B	6
34623	12339448-4	5340-01-201-9076	166A	6
19207	12339448-4	5340-01-201-9076	166B	22
19207	12339448-4	5340-01-201-9076	167B	6
34623	12339451-1	3040-01-195-4173	166A	33
34623	12339451-1	3040-01-195-4173	167E	9
34623	12339451-2	3040-01-196-1493	166A	33
34623	12339451-2	3040-01-196-1493	167E	9
19207	12339452-1	3040-01-200-1015	167B	33
19207	12339452-1	3040-01-200-1015	167E	9
34623	12339454-1	2540-01-199-5812	167B	29
34623	12339454-1	2540-01-199-5812	167E	8
19207	12339463-1	5330-01-198-8789	167B	26

CAGE	PART NUMBER	STOCK NUMBER	FIG.	ITEM
19207	12339463-2	5330-01-196-7968	167B	26
19207	12339473-1	2510-01-254-1501	166A	1
19207	12339473-2	2510-01-257-3904	166A	1
19207	12339480-1	2510-01-257-3903	167B	1
19207	12339480-2	2510-01-254-1500	167B	1
19207	12339491-1	5342-01-250-1098	20	15
19207	12339505-MO		228	5
19207	12339610-1	2540-01-252-8460	182	21
19207	12339610-1	2540-01-252-8460	207A	31
34623	12339610-2	2540-01-252-3386	182	21
34623	12339610-2	2540-01-252-3386	207A	31
19207	12339616-1	5330-01-195-9049	206	23
19207	12339646-1	2540-01-192-4504	205	9
19207	12339646-2	2540-01-192-9721	205	9
19207	12339649-1	2510-01-249-1582	204	21
19207	12339649-2	2510-01-249-1581	204	21
19207	12339661-1	5340-01-332-7602	212	6
19207	12339661-1	5340-01-332-7602	210A	37
19207	12339679-1	2590-01-189-9736	198	9
19207	12339679-1	2590-01-189-9736	201	10
19207	12339679-1	2590-01-189-9736	196C	21
19207	12339679-1	2590-01-189-9736	200F	22
19207	12339679-1	2590-01-189-9736	200H	4
19207	12339679-2	2590-01-188-5080	201	8
19207	12339698-3	2510-01-335-7799	156	18
34623	12339698-4	2510-01-361-8213	158	39
19207	12339701-1	2510-01-335-4171	156	5
19207	12339707-1	2510-01-335-4170	158	55
19207	12339728-2	5310-01-203-3217	166A	20
19207	12339728-2	5310-01-203-3217	167B	20
19207	12339728-3	5310-01-198-3487	166A	13
19207	12339728-3	5310-01-198-3487	167B	13
19207	12339817-2	5340-01-198-2255	224	2
19207	12339862-2	5310-01-211-0698	261	2
19207	12339880-2	5340-01-199-6103	205	18
19207	12339880-2	5340-01-199-6103	204B	18
19207	12339880-2	5340-01-199-6103	205A	15
19207	12339884-1	4730-00-024-3971	37	4
19207	12339884-1	4730-00-024-3971	139	2
19207	12339884-1	4730-00-024-3971	117E	2
19207	12339884-1	4730-00-024-3971	117F	7
19207	12339902-1	2590-01-196-7281	123	9
19207	12339902-1	2590-01-196-7281	BULK	68
2L480	12339902-12	2590-01-565-7676	40	5
2L480	12339902-12	2590-01-565-7676	201M	17

CROSS REFERENCE INDEXES
PART NUMBER

CAGE	PART NUMBER	STOCK NUMBER	FIG.	ITEM
2L480	12339902-12	2590-01-565-7676	40A	3
19207	12339902-14		273	14
19207	12339902-14		201O	11
19207	12339902-2	2590-01-519-7840	BULK	21
19207	12339961-1	5340-01-196-8028	208	11
19207	12339961-1	5340-01-196-8028	208A	13
19207	12339964-2	4730-01-195-3803	129	8
19207	12339979-1	4730-01-545-8308	128A	3
19207	12339979-2	4730-01-211-0896	30	7
34623	12339981-2		251	17
19207	12339981-6		30	6
19207	12339981-8		112	7
19207	12339981-9		112	1
19207	12339988-1	5340-01-246-8282	156	24
19207	12339988-2	5340-01-248-7646	158	43
19207	12339998-13	5310-01-198-1722	223	25
19207	12339998-14	5310-01-198-1723	208	12
19207	12339998-14	5310-01-198-1723	212	20
19207	12339998-14	5310-01-198-1723	233	28
19207	12339998-14	5310-01-198-1723	208A	14
19207	12339998-14	5310-01-198-1723	223A	18
19207	12339998-14	5310-01-198-1723	227A	6
19207	12340001-1	5306-01-548-5059	204A	24
19207	12340001-1	5306-01-548-5059	207B	47
19207	12340001-2	5306-01-199-1314	206	3
19207	12340001-2	5306-01-199-1314	207A	3
19207	12340039-1	2540-01-197-4900	167B	22
19207	12340078-5		268	2
19207	12340090-1	2510-01-257-1572	196D	17
19207	12340090-1	2510-01-257-1572	196D	45
19207	12340090-2	2510-01-266-8013	196D	18
19207	12340090-2	2510-01-266-8013	196D	44
19207	12340099-1	5365-01-195-4949	210	8
19207	12340099-1	5365-01-195-4949	196D	5
19207	12340099-4	5365-01-255-4633	196D	5
19207	12340099-5	5365-01-255-4634	196D	5
19207	12340103-2	2590-01-205-8607	196B	20
19207	12340103-3	2590-01-460-8320	196D	32
19207	12340103-4		196D	32
19207	12340115-1	5365-01-254-4394	196D	13
19207	12340115-1	5365-01-254-4394	196G	58
19207	12340115-2	5365-01-457-3364	196D	13
19207	12340115-2	5365-01-457-3364	196G	59
19207	12340158-2	2590-01-247-7920	223	4
19207	12340158-2	2590-01-247-7920	223A	19

CROSS REFERENCE INDEXES
PART NUMBER

CAGE	PART NUMBER	STOCK NUMBER	FIG.	ITEM
19207	12340182-1	5340-01-208-7670	227D	26
19207	12340193-1	5340-01-205-9021	226	17
19207	12340193-1	5340-01-205-9021	249	26
19207	12340193-1	5340-01-205-9021	227C	13
19207	12340193-1	5340-01-205-9021	227C	25
19207	12340193-2	5340-01-205-9022	226	17
19207	12340193-2	5340-01-205-9022	249	24
19207	12340193-2	5340-01-205-9022	249	26
19207	12340193-2	5340-01-205-9022	227C	13
19207	12340193-2	5340-01-205-9022	227C	25
19207	12340212-3	5325-01-357-1080	226	18
19207	12340212-3	5325-01-357-1080	227C	33
19207	12340214-1	5340-01-256-9318	226	20
19207	12340214-1	5340-01-256-9318	227C	17
19207	12340214-1	5340-01-256-9318	227C	32
19207	12340214-2	5340-01-255-9919	226	20
19207	12340214-2	5340-01-255-9919	227C	17
19207	12340214-2	5340-01-255-9919	227C	32
19207	12340222-1	2590-01-196-1290	227D	7
19207	12340222-2	2590-01-196-5314	227D	7
19207	12340231-10	2510-01-450-5480	226	7
19207	12340231-10	2510-01-450-5480	227C	19
19207	12340231-11	2510-01-450-5479	226	7
19207	12340231-11	2510-01-450-5479	227C	19
19207	12340231-3	2510-01-330-6174	226	7
19207	12340231-3	2510-01-330-6174	227C	19
19207	12340231-4	2510-01-330-6175	226	7
19207	12340231-4	2510-01-330-6175	227C	19
34623	12340231-5	2510-01-407-6037	226	7
34623	12340231-5	2510-01-407-6037	227C	19
34623	12340231-6	2510-01-407-6036	226	7
34623	12340231-6	2510-01-407-6036	227C	19
19207	12340245-3	2510-01-330-6176	227C	5
19207	12340245-4	2510-01-330-6576	227C	5
34623	12340245-5	2510-01-412-6761	227C	5
34623	12340245-6	2510-01-413-8872	227C	5
19207	12340245-7	2510-01-450-5482	227C	5
19207	12340245-8	2510-01-450-5483	227C	5
19207	12340257-1	5310-01-198-3428	166A	27
19207	12340257-1	5310-01-198-3428	167B	27
19207	12340259-15	5310-01-542-4808	220A	1
19207	12340259-15	5310-01-542-4808	221B	2
19207	12340259-3	5306-01-315-7086	220	13
19207	12340259-3	5306-01-315-7086	221	7
19207	12340259-3	5306-01-315-7086	221A	8

CAGE	PART NUMBER	STOCK NUMBER	FIG.	ITEM
19207	12340259-4	5306-01-315-7088	200	19
19207	12340259-4	5306-01-315-7088	220	7
19207	12340259-4	5306-01-315-7088	220A	19
19207	12340259-4	5306-01-315-7088	221A	9
19207	12340259-6	5306-01-316-1456	220	12
19207	12340259-6	5306-01-316-1456	221	8
19207	12340259-7	5306-01-316-2433	220	1
19207	12340259-7	5306-01-316-2433	221	2
19207	12340259-7	5306-01-316-2433	221A	2
19207	12340310-1		196C	15
19207	12340342-3		196D	43
19207	12340342-4		196D	16
19207	12340342-5	4710-01-333-5995	196D	42
9C234	12340342-6	4710-01-335-7523	196D	15
19207	12340352-1	5306-01-323-5535	166A	50
19207	12340352-1	5306-01-323-5535	166B	26
19207	12340352-1	5306-01-323-5535	167B	50
19207	12340352-2	5306-01-323-5534	157	21
19207	12340507-4	5340-01-258-4529	223	21
19207	12340507-9	5340-01-275-8567	201B	30
19207	12340517-1	5340-01-414-1454	227B	5
19207	12340517-1	5340-01-414-1454	227C	3
19207	12340529-14	5340-01-260-9940	201K	20
19207	12340529-14	5340-01-260-9940	201L	3
19207	12340531-3	2590-01-194-6990	233	36
19207	12340531-4	2590-01-212-4956	233	37
19207	12340571-1	5340-01-460-5306	112	16
19207	12340571-2	5340-01-229-3632	12	19
19207	12340571-2	5340-01-229-3632	12A	15
19207	12340663-1	5340-01-213-4667	72	27
19207	12340676-11	2540-01-330-6177	227C	1
19207	12340676-21	2540-01-412-2661	227C	1
19207	12340676-31	2540-01-450-4019	227C	1
19207	12340700-1		248	17
19207	12340700-10		248	10
19207	12340700-11		248	11
19207	12340700-11		248	24
19207	12340700-12		248	5
34623	12340700-2		248	18
34623	12340700-3		248	18
19207	12340700-4		248	16
19207	12340700-7		248	9
19207	12340700-8		248	21
19207	12340708-1		248	6
19207	12340736-13	2540-01-450-4021	226	1

CAGE	PART NUMBER	STOCK NUMBER	FIG.	ITEM
19207	12340736-18	2540-01-450-4017	226	1
19207	12340736-8	2540-01-330-6173	226	1
19207	12340737-2	2540-01-330-6171	226	4
34623	12340737-3	2540-01-407-9241	226	4
19207	12340761-2	2540-01-330-6169	227B	1
19207	12340761-3	2540-01-450-7686	227B	1
19207	12340761-9	2540-01-450-4015	227B	1
19207	12340764-1	2540-01-199-6761	227A	3
19207	12340764-2	2540-01-200-6611	227A	1
19207	12340832-3	2590-01-212-1057	204	30
19207	12340845-2	5306-01-263-8889	45	9
19207	12340845-2	5306-01-263-8889	44A	7
19207	12340845-2	5306-01-263-8889	45A	7
19207	12340845-3	5306-01-270-5448	45	10
19207	12340845-3	5306-01-270-5448	273	15
19207	12340845-3	5306-01-270-5448	273A	17
19207	12340845-3	5306-01-270-5448	42A	7
19207	12340845-3	5306-01-270-5448	45A	8
19207	12340846-1	5340-01-185-8820	196G	26
19207	12341967-1	5365-01-265-8937	261	16
34623	12341967-2	5365-01-265-8938	261	16
19207	12341967-3	5365-01-265-8939	261	16
19207	12342287-2	4010-01-500-5006	196G	47
19207	12342287-2	4010-01-500-5006	201J	9
19207	12342287-2	4010-01-500-5006	201K	13
19207	12342287-3	4010-01-533-5191	196G	49
19207	12342475-1	2540-01-330-6172	227C	2
19207	12342475-2	2540-01-413-1356	227C	2
19207	12342475-6	2540-01-450-5477	227C	2
19207	12342499-1	5305-01-259-6322	74	4
19207	12342499-1	5305-01-259-6322	213	4
19207	12342499-1	5305-01-259-6322	227	3
19207	12342499-2	5305-01-264-5809	123	10
19207	12342499-2	5305-01-264-5809	202D	17
19207	12342499-2	5305-01-264-5809	210A	31
19207	12342499-2	5305-01-264-5809	267A	3
19207	12342499-3	5305-01-006-5736	70	5
19207	12342499-3	5305-01-006-5736	79	7
19207	12342499-3	5305-01-006-5736	80	8
19207	12342499-3	5305-01-006-5736	81	5
19207	12342499-3	5305-01-006-5736	201L	36
19207	12342499-3	5305-01-006-5736	213A	5
19207	12342499-3	5305-01-006-5736	225C	3
19207	12342499-3	5305-01-006-5736	281C	2
19207	12342499-3	5305-01-006-5736	281D	3

CAGE	PART NUMBER	STOCK NUMBER	FIG.	ITEM
19207	12342499-3	5305-01-006-5736	287A	3
19207	12342499-3	5305-01-006-5736	70A	2
19207	12342499-3	5305-01-006-5736	70A	10
19207	12342500-1	9905-01-478-4267	231	4
19207	12342500-2	9905-01-485-2102	231	2
19207	12342501-1		228	11
19207	12342501-1		228A	11
19207	12342638-1	2640-01-419-6202	131	5
19207	12342638-1	2640-01-419-6202	131A	5
34623	12342951-1	4730-01-412-5216	27	8
19207	12342951-2	4730-01-412-5213	27	21
19207	12342951-2	4730-01-412-5213	31	23
19207	12342953-2	4820-01-456-0172	31	24
19207	12345009-1	4730-00-908-3194	37	7
19207	12345009-1	4730-00-908-3194	40A	12
19207	12349495-1	2530-01-460-2439	137	1
19207	12356703-1	5980-01-187-0791	51	3
19207	12356703-1	5980-01-187-0791	51A	3
19207	12356703-3	6220-01-273-0500	52	4
19207	12356703-4	5980-01-474-6679	249C	8
19207	12356764-1	5360-01-315-7212	226	11
19207	12356764-1	5360-01-315-7212	249	21
19207	12356764-1	5360-01-315-7212	227C	10
19207	12356764-1	5360-01-315-7212	227C	22
19207	12356764-2	5360-01-315-7211	226	11
19207	12356764-2	5360-01-315-7211	249	21
19207	12356764-2	5360-01-315-7211	227C	10
19207	12356764-2	5360-01-315-7211	227C	22
80813	1-236-005	5355-01-298-8571	166A	44
80813	1-236-005	5355-01-298-8571	167B	44
19207	12360850-1	6220-01-284-2709	58	8
19207	12360870-2	6220-01-297-3217	58	9
19207	12387279-10	5310-01-380-1614	209B	5
19207	12387279-10	5310-01-380-1614	209B	11
19207	12387279-11	5310-01-420-0054	201K	28
19207	12387279-42	5310-01-389-9681	201K	39
19207	12387279-42	5310-01-389-9681	201L	37
19207	12387279-52	5310-01-465-0709	201G	10
19207	12387279-52	5310-01-465-0709	205C	6
19207	12387279-52	5310-01-465-0709	209B	10
19207	12414507-006	4730-01-329-9151	40	1
19207	12446845-1	6220-01-418-4404	61	1
19207	12446845-2	5980-01-443-9093	61	1
19207	12446871-10	5325-01-460-8350	167C	14
19207	12446871-10	5325-01-460-8350	209A	5

CAGE	PART NUMBER	STOCK NUMBER	FIG.	ITEM
19207	12446871-10	5325-01-460-8350	249B	24
19207	12446871-2	5310-01-411-3422	207A	24
19207	12446871-2	5310-01-411-3422	228A	41
19207	12446953-2		163	27
19207	12446953-4	2540-01-475-0629	163	27
19207	12446953-4	2540-01-475-0629	163A	28
19207	12446953-5		163	27
19207	12446991-3	2541-01-486-4915	149	21
19207	12447010-1	4720-01-474-9148	232	6
34623	12447010-2	4720-01-444-6433	232	10
19207	12447010-3	4720-01-445-5690	232	9
34623	12447010-5	4720-01-474-2666	232	38
34623	12447029G1	2510-01-411-0652	212	46
34623	12447029G1	2510-01-411-0652	210A	25
19207	12447057-1	3120-01-448-6269	253	10
19207	12447057-2	3120-01-448-6268	253	13
19207	12447060-1	3040-01-477-9645	253	12
34623	12447060-2	3040-01-444-3350	253	14
34623	12447073-4		100	5
34623	12447073-4		100A	17
19207	12447089-1	5340-01-413-0282	148	16
19207	12447089-2	5340-01-412-7514	149	9
19207	12447123-1	5340-01-430-9240	227D	25
19207	12447124-1	5340-01-430-9239	227D	25
34623	12447163-1	2510-01-520-7983	266B	5
19207	12448438-18	5306-01-488-6213	116A	10
19207	12448438-18	5306-01-488-6213	117A	6
9C234	12460092-1	6220-01-413-9828	83	6
9C234	12460092-2	6220-01-412-6420	83	5
19207	12460097-1	5935-01-442-8569	77	9
19207	12460108-5		28	17
19207	12460145-1	5306-01-411-2338	28	27
19207	12460145-1	5306-01-411-2338	266C	6
19207	12460145-2	5305-01-412-5995	266C	5
34623	12460161-3	5340-01-236-2112	204	38
19207	12460269-1	4710-01-434-3151	126	27
19207	12460269-1	4710-01-434-3151	127	20
19207	12460269-2	4710-01-472-7011	126	40
19207	12460269-2	4710-01-472-7011	127	23
19207	12460359-1		167	11
19207	12460359-2	2510-01-560-9327	167A	11
19207	12460360-1		167	11
19207	12460360-2	2510-01-560-2683	167A	11
34623	12460399-1	2520-01-498-9279	56	1
19207	12460407-1	2540-01-481-9178	56	5

CAGE	PART NUMBER	STOCK NUMBER	FIG.	ITEM
19207	12460407-2	2540-01-481-9194	56	4
19207	12460530-1	2540-01-461-8220	163	27
19207	12460531-1	2540-01-461-1460	164	19
19207	12460531-2	2540-01-520-4910	164A	19
19207	12460542-2	5340-01-433-0936	235	5
34623	12469064-1	6150-01-486-3606	252G	1
34623	12469064-1	6150-01-486-3606	252H	6
19207	12469064-2	6150-01-486-3605	225F	4
19207	12469065-1	6150-01-473-1169	225F	1
19207	12469065-1	6150-01-473-1169	252H	1
19207	12469073-1	2590-01-495-0534	25	13
34623	12469073-2	2590-01-458-2609	25	8
19207	12469090-1	5365-01-560-3060	155	9
19207	12469090-2	5365-01-560-3999	155	3
19207	12469090-3		155	3
19207	12469158-2	2920-01-469-6903	62	2
19207	12469210-2	2510-01-473-4043	207	18
19207	12469228-2		157	24
19207	12469228-3		157	24
19207	12469402-2	2510-01-462-4978	141	4
19207	12469404-1	2510-01-440-5301	141	17
19207	12469408-1	5340-01-564-8809	145	4
34623	12469412B1	5340-01-433-2733	142	16
19207	12469415-1	5365-01-502-6900	142	17
19207	12469415-2	5365-01-502-6879	142	17
19207	12469415-2	5365-01-502-6879	141A	11
19207	12469418-1	5306-01-546-3599	142	5
19207	12469418-1	5306-01-546-3599	142A	3
34623	12469440-4		139	9
34623	12469440-4		138A	25
19207	12469440-5		138A	20
19207	12469447-1		1	2
0LJJ1	12470153-1	3110-01-480-5857	196D	9
0LJJ1	12470153-1	3110-01-480-5857	196G	63
19207	12480523-1	5340-01-494-6794	265	9
19207	12480523-2	5340-01-495-7546	265	9
34623	12480595-1	2590-01-539-0647	226A	4
7X677	12514591-RB-12532530	5330-01-378-8646	KITS	8
19200	1-2525-18NP	5305-01-568-4513	167T	21
19200	1-2525-18NP	5305-01-568-4513	169J	21
45152	125508A	2540-00-078-6633	150	7
45152	126488A	5999-01-150-8808	76	8
45152	126488A	5999-01-150-8808	77	12
72794	127H7	5325-01-266-8414	165	33
72794	127H7	5325-01-266-8414	166	2

CAGE	PART NUMBER	STOCK NUMBER	FIG.	ITEM
96881	12L18F	3120-00-485-1017	130	8
19728	12X-198		50	80
19728	12X-201	5310-00-043-2646	50	58
94135	12Z3038PC20	5310-00-013-1044	266O	9
94135	12Z3038PC20	5310-00-013-1044	266P	7
18876	13048915-1	5342-01-104-7700	201	2
18876	13048915-1	5342-01-104-7700	200H	32
70082	1305A	2540-01-487-3626	230A	7
97403	13207E6498-2	5935-00-691-5591	249A	21
62161	1351BAC10SL		299	9
39428	1381A33	2510-01-571-7763	200E	6
19728	13X-5549		50	5
6W728	14-00693	5340-01-421-0460	283	4
6W728	14-00693	5340-01-421-0460	286	7
6W728	14-01663	2590-01-421-6754	286	9
6W728	14-02043	5975-01-513-4184	276B	3
7X677	14066305-AR		21	9
04729	1443-M09-F09-440	5340-01-195-1575	66	3
0LB15	1493B-SA	2530-01-411-2735	133	9
01212	1496M	3120-01-417-8084	KITS	11
96881	14L14F	2530-00-753-7285	133	21
19220	1-5073-U	5340-01-197-1238	205	4
19220	1-5073-U	5340-01-197-1238	204B	4
19220	1-5073-U	5340-01-197-1238	205A	5
04XS7	150-9841		125A	12
04XS7	150-9841		125B	4
19220	1-5631-13-71		167I	19
19200	1-5631-13-71	5340-01-563-2356	167T	27
19200	1-5631-13-71	5340-01-563-2356	169J	22
5A910	1620289-383G	5306-01-462-1445	56	2
19220	16386(71)	5340-01-197-2736	205	17
19220	16386(71)	5340-01-197-2736	204B	14
19220	16386(71)	5340-01-197-2736	205A	14
59150	1675-182	4730-01-189-4600	268	3
19220	16874-63A-75	3040-01-564-2313	167R	6
19220	16874-63A-75	3040-01-564-2313	169I	1
19220	16874-63B-75	3040-01-564-8733	167R	6
19220	16874-63B-75	3040-01-564-8733	169I	1
19220	16874-64-75	3040-01-564-2311	167R	3
19220	16874-FBL-75	2540-01-564-2774	167P	18
19220	16874-FBR-75		167P	18
19220	16874-FT-75		167R	4
19220	16874-FTL-75	2540-01-564-2326	167P	3
19220	16874-FTR-75	2540-01-564-0857	167P	3
19220	16874-RBL-75	2540-01-564-1246	169F	12

CROSS REFERENCE INDEXES
PART NUMBER

CAGE	PART NUMBER	STOCK NUMBER	FIG.	ITEM
19220	16874-RBR-75	2540-01-564-3312	169F	12
19220	16874-RTL-75	2540-01-564-1236	169F	1
19220	16874-RTR-75	2540-01-564-1238	169F	1
19220	16875-52L-75	5340-01-560-2991	167P	19
19220	16875-52L-75	5340-01-560-2991	169F	10
19220	16875-52R-75	5340-01-560-3007	167P	19
19220	16875-52R-75	5340-01-560-3007	169F	10
19220	16875-58L-75	3040-01-564-2366	167P	7
19220	16875-58R-75		167P	7
19220	16877-FB-75		167R	5
19220	16877-FT-75	5342-01-564-1200	167R	4
19220	16877-RT-75	5342-01-565-3848	169I	12
6W728	17-00001	2540-01-460-2450	207	37
6W728	17-00002	2540-01-460-2434	207	38
6W728	17-00003	2540-01-460-2437	207	39
6W728	17-00004	2540-01-460-2451	207	35
6W728	17-00005	2540-01-460-2448	207	34
59150	1775-826	4720-01-188-3190	BULK	14
3M915	17C836R	5306-01-360-0926	261	4
21877	1851863-4	5310-01-117-3446	201K	35
71286	18L13-1-1AA	5340-01-190-0815	201K	3
01276	191321-8-6S	4730-01-528-0977	140	9
01276	191321-8-6S	4730-01-528-0977	138C	12
61423	192579-0022	5340-01-555-2871	266L	19
61423	192579-0022	5340-01-555-2871	266N	4
62380	19562D	2990-01-475-3969	249D	12
96139	19WP51-2AC	5930-01-562-4762	51A	6
19728	19X-3437		50	78
19728	19X-4632		50	65
50022	1AF00019	2930-01-448-9439	36	1
50022	1AF00019	2930-01-448-9439	38A	5
K6019	200 B 8332	2530-01-491-2681	138B	3
6W728	20-01460	4710-01-420-3832	284	16
6W728	20-01487	4710-01-420-5181	285	5
6W728	20-01732	4720-01-456-8970	276A	7
6W728	20-01836	4710-01-456-3627	279A	3
6W728	20-01848	4720-01-460-2436	276A	10
6W728	20-01851	4710-01-460-2435	276A	9
6W728	20-01852	4710-01-460-3301	276A	8
6W728	20-02413	4720-01-499-7635	276A	14
6W728	20-02413	4720-01-499-7635	279A	8
6W728	20-02415	4720-01-507-8678	276A	6
6W728	20-02416	4720-01-507-8679	276A	11
6W728	20-02417	4720-01-507-8681	276A	5
6W728	20-02418	4720-01-499-7648	276A	3

CROSS REFERENCE INDEXES
PART NUMBER

CAGE	PART NUMBER	STOCK NUMBER	FIG.	ITEM
6W728	20-02506	4720-01-516-9679	276A	12
6W728	20-02507	4710-01-516-9676	276A	4
6W728	20-02508	4710-01-516-9686	276A	13
62323	2005160-3	2540-01-542-5419	KITS	12
62323	2005170-1	5340-01-542-6993	220A	9
62323	2005170-3	5340-01-542-6996	220A	9
62323	2005174-1	2540-01-541-9228	220A	2
62323	2005174-1	2540-01-541-9228	221B	3
99449	2005174-1	2540-01-541-9228	221C	1
99449	2005175-1	2540-01-542-3809	220A	15
62323	2005175-1	2540-01-542-3809	221B	12
99449	2005175-1	2540-01-542-3809	221C	5
99449	2005175-3	2540-01-541-9465	220A	15
99449	2005175-3	2540-01-541-9465	221B	12
99449	2005175-3	2540-01-541-9465	221C	5
62323	2005176-1	5340-01-542-2001	221B	7
62323	2005176-1	5340-01-542-2001	221C	11
62323	2005176-3	5340-01-542-2001	220A	13
62323	2005187-1	5340-01-542-5867	KITS	13
62323	2005193-1	5365-01-542-2010	220A	17
62323	2005193-1	5365-01-542-2010	221B	6
62323	2005193-1	5365-01-542-2010	221C	14
62323	2005194-1	5340-01-542-4794	220A	16
62323	2005194-1	5340-01-542-4794	221B	8
62323	2005194-1	5340-01-542-4794	221C	12
62323	2005199-3	5340-01-542-1716	221C	7
99449	2005200-1	5340-01-542-2540	221B	13
99449	2005207-1	5340-01-542-3351	220A	4
62323	2005207-2	5340-01-542-4800	220A	4
79470	200X6	4730-00-289-1254	62	7
06853	203754N	4730-01-049-1559	29	10
0GZB7	2061-8-6S		252F	14
52854	207-320401-00	5340-01-185-4959	212	5
52854	207-320401-00	5340-01-185-4959	210A	38
0AKY3	20-8021	3030-01-466-9476	43	5
0AKY3	20-9646	3030-01-488-5606	43	5
0AKY3	20-9646	3030-01-488-5606	44A	30
01276	2096-4S	4730-01-187-6892	62	5
29372	20L01-1-1AF	5340-01-197-1294	216	8
29372	20L01-1-1AF	5340-01-197-1294	217B	9
71286	20L02-1-1AA	5340-01-087-4612	216	10
71286	20L02-1-1AA	5340-01-087-4612	217B	11
71286	20L56-1-1-AB	5340-01-408-8508	171	13
19728	20X-4222		50	14
6W728	21-00006	5999-01-428-6813	288	11

CROSS REFERENCE INDEXES
PART NUMBER

CAGE	PART NUMBER	STOCK NUMBER	FIG.	ITEM
6W728	21-00103	4730-01-420-4992	284	15
6W728	21-00445	4730-01-460-9074	281	13
6W728	21-00445	4730-01-460-9074	284	11
6W728	21-00445	4730-01-460-9074	288	13
6W728	21-00607	9320-01-475-1646	288	9
6W728	21-00636	5330-01-517-2180	274	12
6W728	21-00713	5330-01-456-8995	284	9
6W728	21-00748	5340-01-460-2457	279A	9
41024	21022103-150IN		226	12
41024	21022103-150IN.		227C	7
41024	21022103-150IN.		227C	28
96652	21-04	5315-01-190-0430	123A	25
95019	211121X	5340-01-188-1017	108	16
95019	211415X	3130-01-203-9870	108	11
02697	2-161N674-70	5331-00-561-0273	225I	5
02697	2-161N674-70	5331-00-561-0273	225I	16
56878	21FAF616	5310-00-458-2382	261	9
56878	21NE-040	5310-01-066-6759	31	19
56878	21NE-040	5310-01-066-6759	165	4
56878	21NE-040	5310-01-066-6759	208	17
56878	21NE-040	5310-01-066-6759	208	33
56878	21NE-040	5310-01-066-6759	208A	19
81343	2-2 130137B	4730-00-278-3721	140	18
6W728	22-00005	5306-01-420-6034	273	19
6W728	22-00005	5306-01-420-6034	273A	18
6W728	22-00005	5306-01-420-6034	276B	4
6W728	22-00080	5306-01-462-3335	286	18
6W728	22-00080	5306-01-462-3335	288	3
6W728	22-00090	5310-01-463-3652	281	2
02697	2-208N674-70	5331-01-013-3723	225I	7
04XS7	220-9968		125A	10
04XS7	220-9968		125B	6
04XS7	220-9969		125A	11
04XS7	220-9969		125B	7
70411	220C-J	4820-01-192-8030	251	2
02697	2-236N304-75	5331-00-579-6861	225H	3
44MG9	22405A		249A	39
93061	224-4-4-5/32	4730-01-003-5105	255	8
93061	224-4-4-5/32	4730-01-003-5105	116A	1
93061	224-4-4-5/32	4730-01-003-5105	128A	1
93061	224-4-4-5/32	4730-01-003-5105	44A	28
93061	224-4-4-5/32	4730-01-003-5105	99A	5
91816	2269B-2MM-.5	4820-01-430-4132	27	9
91816	2269B-2MM-3	4820-01-173-6883	27	22
93061	229-6-2	4730-01-070-7680	25	39

CROSS REFERENCE INDEXES
PART NUMBER

CAGE	PART NUMBER	STOCK NUMBER	FIG.	ITEM
93061	229-6-2	4730-01-070-7680	251	3
03350	22FT832	5310-00-582-5765	22	4
6W728	2-300-9	5360-01-445-6259	169	4
6W728	2-300-9	5360-01-445-6259	167E	12
19220	2-300-P5	5360-01-282-9316	166A	23
19220	2-300-P5	5360-01-282-9316	166B	14
19220	2-300-P5	5360-01-282-9316	167B	23
06032	2310-0143-001	5310-01-121-1703	141	3
06032	2310-0143-001	5310-01-121-1703	144	2
06032	2310-0143-001	5310-01-121-1703	150	2
06032	2310-0143-001	5310-01-121-1703	256	3
06032	2310-0143-001	5310-01-121-1703	261	3
06032	2310-0143-001	5310-01-121-1703	263	11
95019	2-3-11491KX		108	18
56365	23601-00160	5310-00-168-6412	279	2
80045	23MS35338-46	5310-00-637-9541	12	26
80045	23MS35338-46	5310-00-637-9541	45	12
80045	23MS35338-46	5310-00-637-9541	200B	8
80045	23MS35338-46	5310-00-637-9541	200C	3
80045	23MS35338-46	5310-00-637-9541	200D	10
80045	23MS35338-46	5310-00-637-9541	266J	4
80045	23MS35338-46	5310-00-637-9541	266J	20
80045	23MS35338-46	5310-00-637-9541	266L	12
02768	242-180602-90-0101	5340-01-208-8688	25	29
60250	244-7935		124A	10
45152	2477HX	5305-00-855-0957	196D	40
95019	2-5-668X		109	5
95019	2-5-848X		108	8
95019	2-5-848X		108	20
95019	2-6-1318X		108	7
95019	2-6-288X		108	19
96547	263005026TPH-1	5305-01-522-7214	167T	24
96547	263005026TPH-1	5305-01-522-7214	167T	31
96547	263005026TPH-1	5305-01-522-7214	169J	23
96547	263005026TPH-1	5305-01-522-7214	169J	30
97789	27-300	2530-01-261-8011	131	16
97789	27-300	2530-01-261-8011	131A	16
81860	28787-3	5342-01-565-7965	38A	22
19220	29-300-UL	2540-01-197-4900	166B	12
19220	29-300-UR	2540-01-196-5317	166B	12
41387	2938-2	5331-00-580-6586	225D	3
62826	299-0069	2520-01-474-4012	110	1
62826	299-070	2520-01-474-3901	110	1
11083	2D1959	6240-00-019-3093	57	6
11083	2D1959	6240-00-019-3093	58	6

CROSS REFERENCE INDEXES
PART NUMBER

CAGE	PART NUMBER	STOCK NUMBER	FIG.	ITEM
04XS7	300-10467		125A	9
04XS7	300-10467		125B	9
51377	3018-01265-01	5331-01-192-8892	44	5
51377	3018-01339-01	5330-01-247-8438	44	6
51377	3018-01425-01	5330-01-252-0461	44	12
51377	3029-01371-01	5310-01-194-0481	44	2
75418	3030-00364-01	5310-01-190-4607	43	7
75418	3030-00364-01	5310-01-190-4607	44	14
7Z588	30448-D	5315-01-409-1662	267	22
51377	3051-01405-01	5307-01-190-5854	44	11
77237	30H-18	5340-01-017-4630	27	3
6W728	31-00153	4720-01-431-0721	BULK	10
6W728	31-00153-19		284	14
6W728	31-00554-12		249I	20
6W728	31-00554-15		249F	3
6W728	31-00554-3		249I	22
6W728	31-00554-32		249I	14
02769	310-8	5340-00-809-1492	79	24
04XS7	310-9951		125A	5
04XS7	310-9951		125B	10
10001	3176207-C-087	5305-01-076-0334	197	20
6W728	32-00372	4140-01-456-5685	281	4
96214	3238482-2	5340-01-571-8473	201M	3
85757	3250-061	4720-01-014-4915	BULK	45
60250	328-7904	2530-01-566-6740	KITS	39
6W728	33-00220	5325-01-516-6126	279A	4
6W728	33-00748	5325-01-462-6391	276C	1
6W728	33-00748	5325-01-462-6391	279A	5
6W728	33-00777	5331-01-420-1795	285	7
6W728	33-00778	5331-01-419-7754	274	3
6W728	33-00778	5331-01-419-7754	285	6
6W728	33-00778	5331-01-419-7754	276A	1
6W728	33-00778	5331-01-419-7754	279A	1
6W728	33-00779	5331-01-460-2442	274	2
6W728	33-00779	5331-01-460-2442	276G	5
6W728	33-00780	5331-01-421-4960	285	2
6W728	33-00781	5331-01-419-7755	276A	2
6W728	33-00781	5331-01-419-7755	279A	7
6W728	33-00811	5310-01-420-4522	273	22
6W728	33-00811	5310-01-420-4522	273A	21
6W728	33-00822	5310-01-419-5091	273	21
6W728	33-00822	5310-01-419-5091	273A	20
6W728	33-00971	5975-01-516-8350	276B	2
01347	330-10-10R	4820-01-005-2994	246	3
6W728	33-01016	5330-01-513-4894	279A	6

CAGE	PART NUMBER	STOCK NUMBER	FIG.	ITEM
04XS7	330-9950		125A	13
04XS7	330-9950		125B	5
73957	3-32X3-4LG	5315-00-828-5487	11	13
95019	3-3-5571X		109	2
87373	33982-6-6	4730-01-221-7320	100A	3
19220	3-400-L (25)	5340-01-198-5455	205	18
19220	3-400-L (25)	5340-01-198-5455	204B	13
19220	3-400-L (25)	5340-01-198-5455	205A	15
79470	3400X2W	4730-00-639-9730	107	4
62226	34068-02	5355-01-481-5517	215	15
95019	3-4-11931	2520-01-432-3492	117	10
95105	343-0586-000	5305-00-984-6208	209	11
19220	34-4974-51X	5340-01-259-8600	205	23
19220	34-4974-51X	5340-01-259-8600	204B	21
19220	34-4974-51X	5340-01-259-8600	205A	20
0GZB7	34-50160		225K	11
60038	3490-3420	3110-00-100-5920	113	29
60038	3490-3420	3110-00-100-5920	119	29
6W728	35-02005	4130-01-459-0475	273	20
6W728	35-02005	4130-01-459-0475	273A	19
62380	35283A	5305-01-475-3402	249A	36
02768	354-280308-00-2099	5325-01-197-3460	121	9
02768	354-280308-00-2099	5325-01-197-3460	232	20
60602	35745-44	2590-01-199-5423	33	16
60602	35752-12		33	12
95019	3-6-238X		109	4
24975	36-630	5330-01-190-7510	KITS	40
72447	3-70-89	5340-01-389-2417	109	8
94222	37-10-071-10	5340-00-492-2313	165	11
94222	37-10-071-10	5340-00-492-2313	165	22
68505	37-123	5330-01-190-7509	KITS	41
94222	37-20-086-20	5340-01-130-9437	196G	24
19728	37X-4914		50	76
6W728	38-00204	5305-01-420-6770	281	3
6W728	38-00205	5306-01-465-2822	281	10
62380	38634A	5340-01-475-3171	249A	35
3M915	39105002H400A	5340-01-571-8804	200B	14
6W728	40-00410	6105-01-460-4950	286	17
19207	400-080-330-140		BULK	31
5A257	400518-A		119A	2
5A257	400708-A		119A	4
75418	4026-38368-01	2930-01-189-8643	44	17
01276	402X3	4730-01-199-1878	126A	27
01276	402X3	4730-01-199-1878	127A	12
51377	4040-38442-01		44	7

CAGE	PART NUMBER	STOCK NUMBER	FIG.	ITEM
51377	4043-38443-01	2930-01-189-1744	44	4
51377	4073-38424-01		44	15
51377	4079-38441-01		44	18
60250	40-8007	5360-01-566-1150	124A	6
95021	4080-08	5120-00-516-4979	290	16
95021	4080-12	5120-00-683-8597	299	5
80045	4201-87-23	5305-00-582-9501	72	1
80045	4201-87-23	5305-00-582-9501	79	14
80045	4201-87-23	5305-00-582-9501	80	12
80045	4201-87-23	5305-00-582-9501	139	17
80045	4201-87-23	5305-00-582-9501	214	12
80045	4201-87-23	5305-00-582-9501	228	45
80045	4201-87-23	5305-00-582-9501	267	6
80045	4201-87-23	5305-00-582-9501	228A	44
77824	4215-5116-0 28IN	5330-01-421-4967	BULK	46
24161	4219-3681	4720-01-163-7833	BULK	5
60250	43-8891	5306-01-565-8902	124A	1
60250	43-9092	5305-01-565-8910	124A	7
60250	43-9171	5315-01-566-1401	124A	4
60250	43-9200	5315-01-565-7674	124A	3
6W728	4397000-003	5305-01-564-0589	169E	20
6W728	4397000-005	5306-01-433-9180	167E	5
6W728	4397000-005	5306-01-433-9180	169E	24
6W728	4397000-005	5306-01-433-9180	196E	4
6W728	4397000-006	5306-01-430-7399	185	7
6W728	4397000-006	5306-01-430-7399	192	9
6W728	4397000-006	5306-01-430-7399	279	8
6W728	4397000-006	5306-01-430-7399	167M	9
6W728	4397000-006	5306-01-430-7399	167N	3
6W728	4397000-006	5306-01-430-7399	169B	6
6W728	4397000-006	5306-01-430-7399	169C	7
6W728	4397000-006	5306-01-430-7399	169E	5
6W728	4397000-006	5306-01-430-7399	188C	7
6W728	4397000-006	5306-01-430-7399	195A	7
6W728	4397000-006	5306-01-430-7399	201A	9
6W728	4397000-006	5306-01-430-7399	201C	4
6W728	4397000-006	5306-01-430-7399	249G	5
6W728	4397000-006	5306-01-430-7399	249I	8
6W728	4397000-006	5306-01-430-7399	249J	1
6W728	4397000-006	5306-01-430-7399	265G	4
6W728	4397000-006	5306-01-430-7399	266D	7
6W728	4397000-006	5306-01-430-7399	269A	9
6W728	4397000-006	5306-01-430-7399	276C	8
6W728	4397000-006	5306-01-430-7399	282A	1
6W728	4397000-007	5306-01-433-9181	265J	12

CROSS REFERENCE INDEXES
PART NUMBER

CAGE	PART NUMBER	STOCK NUMBER	FIG.	ITEM
6W728	4397000-008	5305-01-436-6379	167	24
6W728	4397000-008	5305-01-436-6379	206	7
6W728	4397000-008	5305-01-436-6379	274	8
6W728	4397000-008	5305-01-436-6379	167A	21
6W728	4397000-008	5305-01-436-6379	201A	3
6W728	4397000-008	5305-01-436-6379	225G	1
6W728	4397000-010	5306-01-436-5392	206	8
6W728	4397000-010	5306-01-436-5392	169G	5
6W728	4397000-010	5306-01-436-5392	188I	6
6W728	4397000-010	5306-01-436-5392	195A	8
6W728	4397000-010	5306-01-436-5392	225G	7
6W728	4397000-012	5306-01-420-6635	174	14
6W728	4397000-012	5306-01-420-6635	167E	6
6W728	4397000-012	5306-01-420-6635	188G	12
6W728	4397000-012	5306-01-420-6635	188L	3
6W728	4397000-012	5306-01-420-6635	188M	6
6W728	4397000-012	5306-01-420-6635	195A	1
6W728	4397000-012	5306-01-420-6635	201A	4
6W728	4397000-012	5306-01-420-6635	201C	2
6W728	4397000-012	5306-01-420-6635	265G	5
6W728	4397000-013	5306-01-433-9185	160	30
6W728	4397000-013	5306-01-433-9185	188A	1
6W728	4397000-013	5306-01-433-9185	188B	4
6W728	4397000-013	5306-01-433-9185	188D	5
6W728	4397000-013	5306-01-433-9185	188E	4
6W728	4397000-013	5306-01-433-9185	197A	9
6W728	4397000-014	5306-01-433-9186	188C	4
6W728	4397000-014	5306-01-433-9186	188E	3
6W728	4397000-014	5306-01-433-9186	188L	5
6W728	4397000-014	5306-01-433-9186	188M	5
6W728	4397000-014	5306-01-433-9186	249I	7
6W728	4397000-015	5306-01-433-9187	188	13
6W728	4397000-015	5306-01-433-9187	189	11
6W728	4397000-015	5306-01-433-9187	167P	1
6W728	4397000-015	5306-01-433-9187	169F	4
6W728	4397000-015	5306-01-433-9187	188G	7
6W728	4397000-015	5306-01-433-9187	188M	7
6W728	4397000-015	5306-01-433-9187	249G	7
6W728	4397000-017	5306-01-433-9188	210	18
6W728	4397000-017	5306-01-433-9188	188A	8
6W728	4397000-017	5306-01-433-9188	188B	6
6W728	4397000-017	5306-01-433-9188	188H	5
6W728	4397000-017	5306-01-433-9188	196E	11
6W728	4397000-018	5306-01-433-9189	167	13
6W728	4397000-018	5306-01-433-9189	167A	15

CAGE	PART NUMBER	STOCK NUMBER	FIG.	ITEM
6W728	4397000-032	5305-01-530-4758	193	5
6W728	4397000-032	5305-01-530-4758	169H	13
6W728	4397000-032	5305-01-530-4758	188D	6
6W728	4397000-033	5305-01-428-9197	210	17
6W728	4397000-034	5305-01-420-6637	171	10
6W728	4397000-034	5305-01-420-6637	185	3
6W728	4397000-034	5305-01-420-6637	187	5
6W728	4397000-034	5305-01-420-6637	210	19
6W728	4397000-034	5305-01-420-6637	167Q	1
6W728	4397000-034	5305-01-420-6637	169H	10
6W728	4397000-034	5305-01-420-6637	265J	9
6W728	4397000-034	5305-01-420-6637	266F	11
6W728	4397000-036	5306-01-433-9183	171	9
6W728	4397000-036	5306-01-433-9183	200	30
6W728	4397000-036	5306-01-433-9183	167M	1
6W728	4397000-036	5306-01-433-9183	169E	29
6W728	4397000-036	5306-01-433-9183	169H	15
6W728	4397000-036	5306-01-433-9183	169I	11
6W728	4397000-036	5306-01-433-9183	188G	9
6W728	4397000-036	5306-01-433-9183	249F	8
6W728	4397000-036	5306-01-433-9183	266E	1
6W728	4397000-038	5306-01-433-9213	169G	1
6W728	4397000-038	5306-01-433-9213	188I	3
6W728	4397000-039	5305-01-564-0482	169E	8
6W728	4397000-040	5305-01-428-2938	167Q	11
6W728	4397000-040	5305-01-428-2938	188F	5
6W728	4397000-041	5305-01-530-5159	167Q	5
6W728	4397000-041	5305-01-530-5159	188F	4
6W728	4397000-041	5305-01-530-5159	188N	15
6W728	4397000-041	5305-01-530-5159	188O	6
6W728	4397000-049	5306-01-433-9214	219	10
6W728	4397000-059	5305-01-513-5667	192	23
6W728	4397000-059	5305-01-513-5667	193	21
6W728	4397000-059	5305-01-513-5667	194	8
6W728	4397000-059	5305-01-513-5667	195	15
6W728	4397000-059	5305-01-513-5667	196E	14
6W728	4397000-059	5305-01-513-5667	197A	29
6W728	4397000-060	5306-01-433-9196	167O	7
6W728	4397000-060	5306-01-433-9196	167Q	14
6W728	4397000-060	5306-01-433-9196	196E	15
6W728	4397000-060	5306-01-433-9196	196F	11
6W728	4397000-062	5306-01-433-9197	190	7
6W728	4397000-062	5306-01-433-9197	191	4
6W728	4397000-062	5306-01-433-9197	169E	1
6W728	4397000-062	5306-01-433-9197	196F	19

CAGE	PART NUMBER	STOCK NUMBER	FIG.	ITEM
6W728	4397000-062	5306-01-433-9197	198A	3
6W728	4397000-062	5306-01-433-9197	249J	7
6W728	4397000-062	5306-01-433-9197	265C	5
6W728	4397000-062	5306-01-433-9197	265G	9
6W728	4397000-062	5306-01-433-9197	266D	1
6W728	4397000-064	5305-01-436-6377	177	5
6W728	4397000-064	5305-01-436-6377	182	8
6W728	4397000-064	5305-01-436-6377	191	5
6W728	4397000-064	5305-01-436-6377	194	11
6W728	4397000-064	5305-01-436-6377	167D	7
6W728	4397000-064	5305-01-436-6377	169E	18
6W728	4397000-064	5305-01-436-6377	196F	1
6W728	4397000-064	5305-01-436-6377	197A	19
6W728	4397000-064	5305-01-436-6377	265B	7
6W728	4397000-064	5305-01-436-6377	266D	15
6W728	4397000-065	5306-01-433-9198	195	12
6W728	4397000-065	5306-01-433-9198	167M	6
6W728	4397000-065	5306-01-433-9198	169C	4
6W728	4397000-065	5306-01-433-9198	188D	9
6W728	4397000-065	5306-01-433-9198	196F	33
6W728	4397000-066	5306-01-448-5073	175	9
6W728	4397000-066	5306-01-448-5073	188G	5
6W728	4397000-066	5306-01-448-5073	188H	4
6W728	4397000-066	5306-01-448-5073	189G	27
6W728	4397000-066	5306-01-448-5073	196F	25
6W728	4397000-067	5305-01-436-6376	167Q	15
6W728	4397000-067	5305-01-436-6376	188H	7
6W728	4397000-068	5305-01-436-6375	188N	1
6W728	4397000-068	5305-01-436-6375	188O	3
6W728	4397000-069	5305-01-542-0550	188A	9
6W728	4397000-069	5305-01-542-0550	188B	5
6W728	4397000-069	5305-01-542-0550	188G	8
6W728	4397000-069	5305-01-542-0550	188N	9
6W728	4397000-069	5305-01-542-0550	188O	7
6W728	4397000-070	5306-01-446-4661	189G	35
6W728	4397000-072	5305-01-475-0404	175	7
6W728	4397000-072	5305-01-475-0404	176	12
6W728	4397000-072	5305-01-475-0404	188N	13
6W728	4397000-072	5305-01-475-0404	189G	21
6W728	4397000-074	5305-01-475-0361	188A	7
6W728	4397000-074	5305-01-475-0361	188B	8
6W728	4397000-074	5305-01-475-0361	188H	6
6W728	4397000-074	5305-01-475-0361	195B	2
6W728	4397000-074	5305-01-475-0361	195C	4
6W728	4397000-075	5305-00-781-3929	195	21

CROSS REFERENCE INDEXES
PART NUMBER

CAGE	PART NUMBER	STOCK NUMBER	FIG.	ITEM
6W728	4397000-078	5305-01-535-5709	195C	6
6W728	4397000-078	5305-01-535-5709	196F	30
6W728	4397001-032	5306-01-433-9257	168	19
6W728	4397001-036	5305-01-535-5634	167	30
6W728	4397001-036	5305-01-535-5634	167A	27
6W728	4397001-062	5306-01-436-5393	167	4
6W728	4397001-062	5306-01-436-5393	167A	4
6W728	4397001-062	5306-01-436-5393	167P	16
6W728	4397001-065	5305-01-535-5773	167	31
6W728	4397001-065	5305-01-535-5773	167A	28
6W728	4397001-067	5305-01-536-8029	196F	31
6W728	4397001-067	5305-01-536-8029	197A	25
6W728	4397001-068	5305-01-536-8039	196E	17
6W728	4397001-071	5305-00-269-3247	197A	24
6W728	4397001-071	5305-00-269-3247	198A	1
6W728	4397001-071	5305-00-269-3247	265D	13
6W728	4397001-073		197	7
6W728	4397001-389	5305-01-564-2943	169I	5
6W728	4397001-390	5305-01-564-0964	169I	6
6W728	4397002-002	5310-01-417-9042	181	15
6W728	4397002-002	5310-01-417-9042	249F	4
6W728	4397002-022	5310-01-419-3336	169	27
6W728	4397003-002	5310-01-433-0940	168	17
6W728	4397004-005	5310-01-434-1385	167	3
6W728	4397004-005	5310-01-434-1385	168	9
6W728	4397004-005	5310-01-434-1385	169	18
6W728	4397004-005	5310-01-434-1385	170	25
6W728	4397004-005	5310-01-434-1385	207	31
6W728	4397004-005	5310-01-434-1385	286	16
6W728	4397004-005	5310-01-434-1385	167A	3
6W728	4397004-005	5310-01-434-1385	169F	16
6W728	4397004-005	5310-01-434-1385	197A	22
6W728	4397004-005	5310-01-434-1385	200D	4
6W728	4397004-005	5310-01-434-1385	265J	15
6W728	4397004-005	5310-01-434-1385	265K	2
6W728	4397004-006	5310-01-433-0941	167	25
6W728	4397004-006	5310-01-433-0941	169	2
6W728	4397004-006	5310-01-433-0941	167A	22
6W728	4397004-006	5310-01-433-0941	167E	4
6W728	4397004-006	5310-01-433-0941	167M	10
6W728	4397004-006	5310-01-433-0941	167N	4
6W728	4397004-006	5310-01-433-0941	167P	9
6W728	4397004-006	5310-01-433-0941	169B	7
6W728	4397004-006	5310-01-433-0941	169C	13
6W728	4397004-006	5310-01-433-0941	169E	6

CROSS REFERENCE INDEXES
PART NUMBER

CAGE	PART NUMBER	STOCK NUMBER	FIG.	ITEM
6W728	4397004-006	5310-01-433-0941	169F	3
6W728	4397004-006	5310-01-433-0941	169H	11
6W728	4397004-006	5310-01-433-0941	189G	36
6W728	4397004-006	5310-01-433-0941	195A	2
6W728	4397004-006	5310-01-433-0941	265J	11
6W728	4397004-006	5310-01-433-0941	266D	8
6W728	4397004-007	5310-01-417-9942	167	29
6W728	4397004-007	5310-01-417-9942	168	5
6W728	4397004-007	5310-01-417-9942	217	8
6W728	4397004-007	5310-01-417-9942	167A	26
6W728	4397004-007	5310-01-417-9942	167E	15
6W728	4397004-007	5310-01-417-9942	167M	2
6W728	4397004-007	5310-01-417-9942	167Q	2
6W728	4397004-007	5310-01-417-9942	169C	2
6W728	4397004-007	5310-01-417-9942	169E	9
6W728	4397004-007	5310-01-417-9942	169G	2
6W728	4397004-007	5310-01-417-9942	169H	4
6W728	4397004-007	5310-01-417-9942	249F	5
6W728	4397004-007	5310-01-417-9942	266F	10
6W728	4397004-008	5310-01-417-7273	167	5
6W728	4397004-008	5310-01-417-7273	192	22
6W728	4397004-008	5310-01-417-7273	193	22
6W728	4397004-008	5310-01-417-7273	194	9
6W728	4397004-008	5310-01-417-7273	195	14
6W728	4397004-008	5310-01-417-7273	205	36
6W728	4397004-008	5310-01-417-7273	167A	5
6W728	4397004-008	5310-01-417-7273	167D	6
6W728	4397004-008	5310-01-417-7273	167M	7
6W728	4397004-008	5310-01-417-7273	167P	15
6W728	4397004-008	5310-01-417-7273	169C	5
6W728	4397004-008	5310-01-417-7273	169E	2
6W728	4397004-008	5310-01-417-7273	189G	26
6W728	4397004-008	5310-01-417-7273	196E	16
6W728	4397004-008	5310-01-417-7273	196F	2
6W728	4397004-008	5310-01-417-7273	197A	28
6W728	4397004-008	5310-01-417-7273	265B	6
6W728	4397004-008	5310-01-417-7273	265C	3
6W728	4397004-008	5310-01-417-7273	265H	11
6W728	4397004-008	5310-01-417-7273	266D	5
6W728	4397004-009	5310-01-559-1319	169I	4
6W728	4397005-008	5310-01-417-7333	25	27
6W728	4397005-008	5310-01-417-7333	167	7
6W728	4397005-008	5310-01-417-7333	168	8
6W728	4397005-008	5310-01-417-7333	169	17
6W728	4397005-008	5310-01-417-7333	170	26

CROSS REFERENCE INDEXES
PART NUMBER

CAGE	PART NUMBER	STOCK NUMBER	FIG.	ITEM
6W728	4397005-008	5310-01-417-7333	196	24
6W728	4397005-008	5310-01-417-7333	204	25
6W728	4397005-008	5310-01-417-7333	207	32
6W728	4397005-008	5310-01-417-7333	286	15
6W728	4397005-008	5310-01-417-7333	167A	7
6W728	4397005-008	5310-01-417-7333	169F	17
6W728	4397005-008	5310-01-417-7333	200D	3
6W728	4397005-008	5310-01-417-7333	265J	14
6W728	4397005-008	5310-01-417-7333	265K	3
6W728	4397005-008	5310-01-417-7333	269A	12
6W728	4397005-008	5310-01-417-7333	276C	5
6W728	4397005-010	5310-01-435-7784	167	26
6W728	4397005-010	5310-01-435-7784	170	28
6W728	4397005-010	5310-01-435-7784	181	4
6W728	4397005-010	5310-01-435-7784	182	10
6W728	4397005-010	5310-01-435-7784	188	4
6W728	4397005-010	5310-01-435-7784	189	2
6W728	4397005-010	5310-01-435-7784	192	4
6W728	4397005-010	5310-01-435-7784	193	4
6W728	4397005-010	5310-01-435-7784	206	10
6W728	4397005-010	5310-01-435-7784	207	8
6W728	4397005-010	5310-01-435-7784	210	21
6W728	4397005-010	5310-01-435-7784	274	9
6W728	4397005-010	5310-01-435-7784	275	11
6W728	4397005-010	5310-01-435-7784	279	7
6W728	4397005-010	5310-01-435-7784	283	12
6W728	4397005-010	5310-01-435-7784	284	4
6W728	4397005-010	5310-01-435-7784	167A	23
6W728	4397005-010	5310-01-435-7784	167E	3
6W728	4397005-010	5310-01-435-7784	167M	11
6W728	4397005-010	5310-01-435-7784	169C	8
6W728	4397005-010	5310-01-435-7784	188A	2
6W728	4397005-010	5310-01-435-7784	188B	2
6W728	4397005-010	5310-01-435-7784	188C	5
6W728	4397005-010	5310-01-435-7784	188E	2
6W728	4397005-010	5310-01-435-7784	188G	13
6W728	4397005-010	5310-01-435-7784	188H	9
6W728	4397005-010	5310-01-435-7784	188I	5
6W728	4397005-010	5310-01-435-7784	188J	2
6W728	4397005-010	5310-01-435-7784	188K	2
6W728	4397005-010	5310-01-435-7784	188M	8
6W728	4397005-010	5310-01-435-7784	196E	5
6W728	4397005-010	5310-01-435-7784	197A	10
6W728	4397005-010	5310-01-435-7784	201A	2
6W728	4397005-010	5310-01-435-7784	201C	3

CROSS REFERENCE INDEXES
PART NUMBER

CAGE	PART NUMBER	STOCK NUMBER	FIG.	ITEM
6W728	4397005-010	5310-01-435-7784	225G	8
6W728	4397005-010	5310-01-435-7784	249G	4
6W728	4397005-010	5310-01-435-7784	249I	10
6W728	4397005-010	5310-01-435-7784	249J	3
6W728	4397005-010	5310-01-435-7784	265J	10
6W728	4397005-010	5310-01-435-7784	269A	8
6W728	4397005-010	5310-01-435-7784	282A	2
6W728	4397005-011	5340-01-417-8995	171	4
6W728	4397005-011	5340-01-417-8995	210	13
6W728	4397005-011	5340-01-417-8995	167N	5
6W728	4397005-011	5340-01-417-8995	167P	2
6W728	4397005-011	5340-01-417-8995	169B	8
6W728	4397005-011	5340-01-417-8995	169E	7
6W728	4397005-011	5340-01-417-8995	169F	2
6W728	4397005-011	5340-01-417-8995	169G	6
6W728	4397005-011	5340-01-417-8995	188D	4
6W728	4397005-011	5340-01-417-8995	188L	4
6W728	4397005-011	5340-01-417-8995	188M	2
6W728	4397005-011	5340-01-417-8995	195A	3
6W728	4397005-012	5310-01-422-9287	167	28
6W728	4397005-012	5310-01-422-9287	192	10
6W728	4397005-012	5310-01-422-9287	193	6
6W728	4397005-012	5310-01-422-9287	200	34
6W728	4397005-012	5310-01-422-9287	210	6
6W728	4397005-012	5310-01-422-9287	167A	25
6W728	4397005-012	5310-01-422-9287	167E	14
6W728	4397005-012	5310-01-422-9287	169H	5
6W728	4397005-012	5310-01-422-9287	188D	2
6W728	4397005-012	5310-01-422-9287	188F	2
6W728	4397005-012	5310-01-422-9287	188G	10
6W728	4397005-012	5310-01-422-9287	188N	4
6W728	4397005-012	5310-01-422-9287	208A	4
6W728	4397005-012	5310-01-422-9287	265J	3
6W728	4397005-012	5310-01-422-9287	266E	4
6W728	4397005-013	5310-01-436-3741	167M	3
6W728	4397005-013	5310-01-436-3741	167Q	3
6W728	4397005-013	5310-01-436-3741	169C	3
6W728	4397005-013	5310-01-436-3741	169D	10
6W728	4397005-013	5310-01-436-3741	169E	12
6W728	4397005-013	5310-01-436-3741	169G	3
6W728	4397005-013	5310-01-436-3741	169H	8
6W728	4397005-013	5310-01-436-3741	169I	10
6W728	4397005-013	5310-01-436-3741	188N	12
6W728	4397005-013	5310-01-436-3741	188O	5
6W728	4397005-013	5310-01-436-3741	266F	9

CROSS REFERENCE INDEXES
PART NUMBER

CAGE	PART NUMBER	STOCK NUMBER	FIG.	ITEM
6W728	4397005-014	5310-01-419-2413	167	32
6W728	4397005-014	5310-01-419-2413	173	11
6W728	4397005-014	5310-01-419-2413	176	8
6W728	4397005-014	5310-01-419-2413	177	3
6W728	4397005-014	5310-01-419-2413	182	15
6W728	4397005-014	5310-01-419-2413	183	6
6W728	4397005-014	5310-01-419-2413	197	10
6W728	4397005-014	5310-01-419-2413	198	21
6W728	4397005-014	5310-01-419-2413	200	2
6W728	4397005-014	5310-01-419-2413	201	15
6W728	4397005-014	5310-01-419-2413	202	6
6W728	4397005-014	5310-01-419-2413	275	9
6W728	4397005-014	5310-01-419-2413	167A	29
6W728	4397005-014	5310-01-419-2413	167D	5
6W728	4397005-014	5310-01-419-2413	167E	22
6W728	4397005-014	5310-01-419-2413	188A	4
6W728	4397005-014	5310-01-419-2413	188B	7
6W728	4397005-014	5310-01-419-2413	188G	3
6W728	4397005-014	5310-01-419-2413	188H	3
6W728	4397005-014	5310-01-419-2413	188J	8
6W728	4397005-014	5310-01-419-2413	188K	8
6W728	4397005-014	5310-01-419-2413	188N	7
6W728	4397005-014	5310-01-419-2413	189G	19
6W728	4397005-014	5310-01-419-2413	196E	13
6W728	4397005-014	5310-01-419-2413	197A	26
6W728	4397005-014	5310-01-419-2413	198A	2
6W728	4397005-014	5310-01-419-2413	249J	6
6W728	4397005-014	5310-01-419-2413	265B	12
6W728	4397005-014	5310-01-419-2413	265G	10
6W728	4397005-014	5310-01-419-2413	265H	3
6W728	4397005-015	5310-01-436-3742	167	20
6W728	4397005-015	5310-01-436-3742	173	13
6W728	4397005-015	5310-01-436-3742	182	20
6W728	4397005-015	5310-01-436-3742	183	9
6W728	4397005-015	5310-01-436-3742	190	3
6W728	4397005-015	5310-01-436-3742	191	1
6W728	4397005-015	5310-01-436-3742	192	21
6W728	4397005-015	5310-01-436-3742	193	23
6W728	4397005-015	5310-01-436-3742	194	7
6W728	4397005-015	5310-01-436-3742	195	13
6W728	4397005-015	5310-01-436-3742	198	17
6W728	4397005-015	5310-01-436-3742	167M	8
6W728	4397005-015	5310-01-436-3742	167O	4
6W728	4397005-015	5310-01-436-3742	167Q	13
6W728	4397005-015	5310-01-436-3742	169C	6

CAGE	PART NUMBER	STOCK NUMBER	FIG.	ITEM
6W728	4397005-015	5310-01-436-3742	169D	5
6W728	4397005-015	5310-01-436-3742	169E	3
6W728	4397005-015	5310-01-436-3742	188D	10
6W728	4397005-015	5310-01-436-3742	188N	2
6W728	4397005-015	5310-01-436-3742	188O	2
6W728	4397005-015	5310-01-436-3742	196F	3
6W728	4397005-015	5310-01-436-3742	265B	5
6W728	4397005-015	5310-01-436-3742	265C	4
6W728	4397005-017	5310-01-559-1296	169I	3
6W728	4397005-046	5310-01-444-0226	168	2
6W728	4397005-075	5310-01-435-7791	174	10
6W728	4397005-075	5310-01-435-7791	183	24
6W728	4397005-075	5310-01-435-7791	194	12
6W728	4397005-075	5310-01-435-7791	195	11
6W728	4397005-075	5310-01-435-7791	189G	23
6W728	4397005-076	5310-01-472-7216	217	9
6W728	4397007-008	5315-01-433-8419	170	21
6W728	4397007-008	5315-01-433-8419	169E	21
6W728	4397008-052	5305-01-433-9259	170	5
6W728	4397008-072	5305-01-433-9258	170	14
6W728	4397008-072	5305-01-433-9258	167D	2
6W728	4397008-093	5305-01-437-1324	173	1
6W728	4397010-006	5306-01-437-6309	172	4
6W728	4397010-006	5306-01-437-6309	180	10
6W728	4397010-006	5306-01-437-6309	182	5
6W728	4397010-006	5306-01-437-6309	183	15
6W728	4397010-006	5306-01-437-6309	190	8
6W728	4397010-006	5306-01-437-6309	195	1
6W728	4397010-006	5306-01-437-6309	201	12
6W728	4397010-006	5306-01-437-6309	202	10
6W728	4397010-013	5305-01-475-0798	189	12
6W728	4397010-033	5306-01-433-9190	210	14
6W728	4397011-059	5306-01-434-3282	171	17
6W728	4397011-060	5306-01-434-7263	198	25
6W728	4397011-062	5306-01-434-7261	197	14
6W728	4397011-070	5306-01-434-3284	197	8
6W728	4397011-070	5306-01-434-3284	196E	12
6W728	4397012-056	5305-01-465-2821	229	1
6W728	4397012-072	5305-01-438-1201	167	21
6W728	4397012-072	5305-01-438-1201	219	1
6W728	4397012-072	5305-01-438-1201	283	6
6W728	4397013-070	5305-01-434-0832	197	22
6W728	4397013-070	5305-01-434-0832	200	18
6W728	4397013-070	5305-01-434-0832	219	16
6W728	4397013-070	5305-01-434-0832	197A	23

CROSS REFERENCE INDEXES
PART NUMBER

CAGE	PART NUMBER	STOCK NUMBER	FIG.	ITEM
6W728	4397013-070	5305-01-434-0832	200D	8
6W728	4397013-072	5305-01-430-7397	196	18
6W728	4397013-072	5305-01-430-7397	235	8
6W728	4397013-072	5305-01-430-7397	200D	5
6W728	4397013-074	5305-01-434-0831	265K	1
6W728	4397013-074	5305-01-434-0831	269A	11
6W728	4397013-074	5305-01-434-0831	276C	6
6W728	4397013-076	5305-01-563-4565	265J	16
6W728	4397013-077	5305-01-434-2820	196	14
6W728	4397014-070	5305-01-439-8170	219	3
6W728	4397015-030	5305-01-434-7258	170	11
6W728	4397015-030	5305-01-434-7258	167D	22
6W728	4397015-090	5305-01-433-9255	196	21
6W728	4397015-090	5305-01-433-9255	197A	4
6W728	4397015-093	5305-01-475-0553	170	12
6W728	4397015-093	5305-01-475-0553	167I	6
6W728	4397015-093	5305-01-475-0553	167T	40
6W728	4397015-093	5305-01-475-0553	169J	38
6W728	4397015-107	5306-01-420-6039	216	17
6W728	4397015-107	5306-01-420-6039	217	7
6W728	4397015-109	5305-01-475-0608	187	4
6W728	4397018-030	5305-01-550-1827	167E	23
6W728	4397018-072	5305-01-446-4660	167	2
6W728	4397018-072	5305-01-446-4660	170	24
6W728	4397018-072	5305-01-446-4660	167A	2
6W728	4397018-072	5305-01-446-4660	169F	15
6W728	4397018-073	5305-01-465-2823	167	8
6W728	4397018-073	5305-01-465-2823	167A	8
6W728	4397018-074	5305-01-430-7406	167	9
6W728	4397018-074	5305-01-430-7406	168	10
6W728	4397018-074	5305-01-430-7406	167A	9
6W728	4397018-074	5305-01-430-7406	167E	16
6W728	4397018-077	5305-01-436-5402	169	19
6W728	4397018-094	5305-01-436-5414	169	1
6W728	4397018-094	5305-01-436-5414	249G	14
6W728	4397018-096	5305-01-564-2962	169H	12
6W728	4397020-023	5340-01-513-4903	167E	21
6W728	4397020-023	5340-01-513-4903	274A	2
6W728	4397025-026	5315-01-564-2916	167O	6
6W728	4397025-026	5315-01-564-2916	169D	8
6W728	4397031-089	5305-01-564-1213	169H	1
6W728	4397031-090	5305-01-560-2571	167D	15
6W728	4397031-093	5305-01-564-3112	167P	11
6W728	4397031-093	5305-01-564-3112	169F	21
6W728	4397037-006	5310-01-419-4436	168	14

CAGE	PART NUMBER	STOCK NUMBER	FIG.	ITEM
6W728	4397037-006	5310-01-419-4436	187	2
6W728	4397040-020		269A	6
6W728	4397042-022	5320-01-434-0758	197	18
6W728	4397042-621	5320-01-436-5552	183	18
6W728	4397042-621	5320-01-436-5552	198	10
6W728	4397042-621	5320-01-436-5552	197A	30
6W728	4397042-621	5320-01-436-5552	198A	8
6W728	4397044-008	5320-01-516-7019	238	20
6W728	4397044-021	5320-01-473-2768	171	14
6W728	4397050-022	5310-01-469-1183	25	35
6W728	4397050-022	5310-01-469-1183	223	24
6W728	4397050-022	5310-01-469-1183	276C	3
6W728	4397050-025	5310-01-521-2135	182	17
6W728	4397050-025	5310-01-521-2135	195	2
6W728	4397050-025	5310-01-521-2135	228	36
6W728	4397050-025	5310-01-521-2135	274	10
6W728	4397050-025	5310-01-521-2135	275	10
6W728	4397050-025	5310-01-521-2135	167D	4
6W728	4397050-025	5310-01-521-2135	189E	1
6W728	4397050-025	5310-01-521-2135	201A	7
6W728	4397050-025	5310-01-521-2135	201C	12
6W728	4397050-025	5310-01-521-2135	210B	3
6W728	4397050-025	5310-01-521-2135	249G	2
6W728	4397050-025	5310-01-521-2135	249I	13
6W728	4397050-025	5310-01-521-2135	249J	8
6W728	4397050-025	5310-01-521-2135	276C	10
6W728	4397050-028	5310-01-525-1238	201A	8
6W728	4397050-028	5310-01-525-1238	201C	10
6W728	4397050-049	5325-01-474-9732	201C	19
6W728	4397051-037	5306-01-436-5429	169	29
6W728	4397051-037	5306-01-436-5429	167E	19
6W728	4397053-010	5305-01-433-9254	275	14
6W728	4397054-030	5305-01-434-3286	204	26
6W728	4397054-032	5305-01-513-5711	196E	7
6W728	4397056-094	5305-01-560-2574	185	12
6W728	4397057-029	5310-01-437-3838	196	12
6W728	4397058-023	5310-01-437-3837	196	5
6W728	4397059-016	5331-01-439-8821	196	13
6W728	4397060-001	5305-01-560-3585	167E	20
6W728	4397060-030	5305-01-437-6313	196	9
6W728	4397061-072	5305-01-440-3672	196	2
6W728	4397061-073	5305-01-437-7295	196	19
6W728	4397061-073	5305-01-437-7295	197A	1
6W728	4397062-071	5305-01-440-3673	178	1
6W728	4397062-076	5305-01-440-3664	180	7

CROSS REFERENCE INDEXES
PART NUMBER

CAGE	PART NUMBER	STOCK NUMBER	FIG.	ITEM
6W728	4397062-076	5305-01-440-3664	181	19
6W728	4397063-070	5305-01-437-9169	198	3
6W728	4397063-072	5305-01-465-2817	205	32
6W728	4397063-072	5305-01-465-2817	223	5
6W728	4397063-072	5305-01-465-2817	224	1
6W728	4397063-072	5305-01-465-2817	279	5
6W728	4397064-001	5310-01-439-8173	167	15
6W728	4397064-001	5310-01-439-8173	169	9
6W728	4397064-001	5310-01-439-8173	170	10
6W728	4397064-001	5310-01-439-8173	173	2
6W728	4397064-001	5310-01-439-8173	179	4
6W728	4397064-001	5310-01-439-8173	180	3
6W728	4397064-001	5310-01-439-8173	181	1
6W728	4397064-001	5310-01-439-8173	182	4
6W728	4397064-001	5310-01-439-8173	185	10
6W728	4397064-001	5310-01-439-8173	188	5
6W728	4397064-001	5310-01-439-8173	189	1
6W728	4397064-001	5310-01-439-8173	192	7
6W728	4397064-001	5310-01-439-8173	193	18
6W728	4397064-001	5310-01-439-8173	196	23
6W728	4397064-001	5310-01-439-8173	198	5
6W728	4397064-001	5310-01-439-8173	200	8
6W728	4397064-001	5310-01-439-8173	206	11
6W728	4397064-001	5310-01-439-8173	207	9
6W728	4397064-001	5310-01-439-8173	210	15
6W728	4397064-001	5310-01-439-8173	284	3
6W728	4397064-001	5310-01-439-8173	167A	17
6W728	4397064-001	5310-01-439-8173	167D	3
6W728	4397064-001	5310-01-439-8173	167E	1
6W728	4397064-001	5310-01-439-8173	167P	22
6W728	4397064-001	5310-01-439-8173	169F	8
6W728	4397064-001	5310-01-439-8173	169G	9
6W728	4397064-001	5310-01-439-8173	188A	6
6W728	4397064-001	5310-01-439-8173	188B	1
6W728	4397064-001	5310-01-439-8173	188C	6
6W728	4397064-001	5310-01-439-8173	188D	1
6W728	4397064-001	5310-01-439-8173	188E	1
6W728	4397064-001	5310-01-439-8173	188G	15
6W728	4397064-001	5310-01-439-8173	188H	8
6W728	4397064-001	5310-01-439-8173	188J	3
6W728	4397064-001	5310-01-439-8173	188K	1
6W728	4397064-001	5310-01-439-8173	188L	8
6W728	4397064-001	5310-01-439-8173	188M	1
6W728	4397064-001	5310-01-439-8173	189G	14
6W728	4397064-001	5310-01-439-8173	195A	10

CROSS REFERENCE INDEXES
PART NUMBER

CAGE	PART NUMBER	STOCK NUMBER	FIG.	ITEM
6W728	4397064-001	5310-01-439-8173	197A	6
6W728	4397064-001	5310-01-439-8173	202A	12
6W728	4397064-001	5310-01-439-8173	225G	9
6W728	4397064-001	5310-01-439-8173	249G	19
6W728	4397064-001	5310-01-439-8173	249I	11
6W728	4397064-001	5310-01-439-8173	249J	4
6W728	4397064-001	5310-01-439-8173	282A	4
6W728	4397064-001	5310-01-439-8173	288A	6
6W728	4397064-003	5310-01-439-8172	171	3
6W728	4397064-003	5310-01-439-8172	179	5
6W728	4397064-003	5310-01-439-8172	185	5
6W728	4397064-003	5310-01-439-8172	187	1
6W728	4397064-003	5310-01-439-8172	196	7
6W728	4397064-003	5310-01-439-8172	200	35
6W728	4397064-003	5310-01-439-8172	210	10
6W728	4397064-003	5310-01-439-8172	219	14
6W728	4397064-003	5310-01-439-8172	167P	5
6W728	4397064-003	5310-01-439-8172	167Q	8
6W728	4397064-003	5310-01-439-8172	169D	9
6W728	4397064-003	5310-01-439-8172	169F	7
6W728	4397064-003	5310-01-439-8172	169H	9
6W728	4397064-003	5310-01-439-8172	188F	1
6W728	4397064-003	5310-01-439-8172	188I	1
6W728	4397064-003	5310-01-439-8172	188N	5
6W728	4397064-003	5310-01-439-8172	265J	2
6W728	4397064-003	5310-01-439-8172	266E	5
6W728	4397064-005	5310-01-439-8177	173	4
6W728	4397064-005	5310-01-439-8177	174	5
6W728	4397064-005	5310-01-439-8177	175	5
6W728	4397064-005	5310-01-439-8177	176	5
6W728	4397064-005	5310-01-439-8177	177	2
6W728	4397064-005	5310-01-439-8177	182	16
6W728	4397064-005	5310-01-439-8177	183	1
6W728	4397064-005	5310-01-439-8177	188	7
6W728	4397064-005	5310-01-439-8177	190	4
6W728	4397064-005	5310-01-439-8177	191	7
6W728	4397064-005	5310-01-439-8177	195	19
6W728	4397064-005	5310-01-439-8177	200	1
6W728	4397064-005	5310-01-439-8177	202	8
6W728	4397064-005	5310-01-439-8177	275	8
6W728	4397064-005	5310-01-439-8177	167O	3
6W728	4397064-005	5310-01-439-8177	169D	7
6W728	4397064-005	5310-01-439-8177	188A	5
6W728	4397064-005	5310-01-439-8177	188B	9
6W728	4397064-005	5310-01-439-8177	188G	2

CROSS REFERENCE INDEXES
PART NUMBER

CAGE	PART NUMBER	STOCK NUMBER	FIG.	ITEM
6W728	4397064-005	5310-01-439-8177	188H	1
6W728	4397064-005	5310-01-439-8177	188N	6
6W728	4397064-005	5310-01-439-8177	188O	12
6W728	4397064-005	5310-01-439-8177	189G	24
6W728	4397064-005	5310-01-439-8177	195B	6
6W728	4397064-005	5310-01-439-8177	195C	7
6W728	4397064-005	5310-01-439-8177	196F	22
6W728	4397064-005	5310-01-439-8177	197A	18
6W728	4397064-005	5310-01-439-8177	265B	11
6W728	4397064-005	5310-01-439-8177	265C	10
6W728	4397064-005	5310-01-439-8177	265G	13
6W728	4397064-005	5310-01-439-8177	266D	6
6W728	4397064-006	5310-01-437-3845	197	9
6W728	4397064-006	5310-01-437-3845	198	24
6W728	4397064-006	5310-01-437-3845	188J	4
6W728	4397064-006	5310-01-437-3845	188K	3
6W728	4397064-006	5310-01-437-3845	198A	7
6W728	4397064-006	5310-01-437-3845	265H	15
6W728	4397064-008	5310-01-439-8178	200	32
6W728	4397064-013	5310-01-439-8179	182	24
6W728	4397064-014	5310-01-542-0447	168	1
6W728	4397066-147	5305-01-440-3669	183	10
6W728	4397067-120	5305-01-440-3670	192	16
6W728	4397067-120	5305-01-440-3670	193	14
6W728	4397067-120	5305-01-440-3670	195	17
6W728	4397067-121	5305-01-437-6312	197	5
6W728	4397068-003	5310-01-437-3836	196	4
6W728	4397071-030	5305-01-475-0878	179	7
6W728	4397073-001	5310-01-465-9608	283	7
6W728	4397073-002	5310-01-437-3839	169	22
6W728	4397073-003	5310-01-439-8180	178	5
6W728	4397073-003	5310-01-439-8180	196	25
6W728	4397073-003	5310-01-439-8180	219	5
6W728	4397073-003	5310-01-439-8180	235	10
6W728	4397076-001	5325-01-441-3160	169	21
6W728	4397080-002-30		31	14
6W728	4397081-009	5320-01-529-9455	171	12
6W728	4397081-010	5320-01-440-0320	219	12
6W728	4397081-011	5320-01-439-9728	167A	18
6W728	4397081-011	5320-01-439-9728	167C	9
6W728	4397083-001	5310-01-439-8181	172	2
6W728	4397083-001	5310-01-439-8181	174	2
6W728	4397083-001	5310-01-439-8181	175	2
6W728	4397083-001	5310-01-439-8181	185	9
6W728	4397083-001	5310-01-439-8181	188	1

CAGE	PART NUMBER	STOCK NUMBER	FIG.	ITEM
6W728	4397083-001	5310-01-439-8181	189	6
6W728	4397083-001	5310-01-439-8181	190	5
6W728	4397083-001	5310-01-439-8181	190	9
6W728	4397083-001	5310-01-439-8181	284	5
6W728	4397083-001	5310-01-439-8181	188G	14
6W728	4397083-001	5310-01-439-8181	188I	2
6W728	4397083-001	5310-01-439-8181	188L	6
6W728	4397083-001	5310-01-439-8181	188M	3
6W728	4397083-001	5310-01-439-8181	188N	19
6W728	4397084-020	5305-01-437-9168	269A	1
6W728	4397084-020	5305-01-437-9168	276C	2
6W728	4397089-039	5305-01-465-2814	209	1
6W728	4397089-039	5305-01-465-2814	283	5
6W728	4397089-054	5305-01-475-0290	186	4
6W728	4397091-030	5305-01-466-7937	192	13
6W728	4397091-030	5305-01-466-7937	193	16
6W728	4397091-030	5305-01-466-7937	194	13
6W728	4397091-030	5305-01-466-7937	195	9
31272	43977-12	5340-01-271-4282	201B	29
6W728	44-00267	5945-01-421-1785	283	8
6W728	44-00268	5945-01-421-1784	283	2
31272	44647-10	5340-01-203-5634	201K	19
31272	44647-10	5340-01-203-5634	207A	42
31272	44648-12	5340-01-570-8985	201O	2
31272	44702-10	5340-01-203-6542	249	9
31272	44702-10	5340-01-203-6542	227B	6
31272	44702-10	5340-01-203-6542	227C	4
31272	44943-11	5340-01-198-3457	208	31
31272	44943-11	5340-01-198-3457	209B	4
31272	45053-10	5340-01-199-1662	204	14
31272	45053-11	5340-01-198-2253	201J	4
31272	45262-10	5340-01-253-8971	166A	2
31272	45262-10	5340-01-253-8971	167B	2
31272	45262-11	5340-01-255-9918	166A	2
31272	45262-11	5340-01-255-9918	167B	2
31272	45410-11	5340-01-254-7190	222	1
31272	45410-14	5340-01-259-0329	223	1
31272	45410-16	5340-01-258-6158	209	3
31272	45410-16	5340-01-258-6158	222	1
31272	45410-16	5340-01-258-6158	224	8
0VU83	45410-18	5340-01-259-0330	223	10
0VU83	45410-18	5340-01-259-0330	223	13
0VU83	45410-18	5340-01-259-0330	223A	9
31272	45410-21	5340-01-275-8568	205C	16
31272	45460-10	5340-01-253-8933	196D	14

CAGE	PART NUMBER	STOCK NUMBER	FIG.	ITEM
31272	45460-10	5340-01-253-8933	196G	60
31272	45481-01	2590-01-260-0214	201B	5
31272	45602-10	2590-01-262-4981	201B	6
31272	45602-10	2590-01-262-4981	201L	15
31272	45602-11	2590-01-262-4980	201B	3
31272	45606-12	5340-01-256-4655	223A	15
31272	45608-10	2590-01-261-0523	201B	21
31272	45610-10	5307-01-286-6007	201B	23
31272	45610-10	5307-01-286-6007	201L	26
31272	45611-10	5310-01-298-4686	201B	4
31272	45611-10	5310-01-298-4686	201L	14
31272	45613-10	5365-01-267-6769	201B	12
31272	45613-10	5365-01-267-6769	201L	23
31272	45615-10	5340-01-260-0218	201B	20
31272	45615-10	5340-01-260-0218	201L	27
31272	45616-11	2590-01-260-0217	201B	19
31272	45616-11	2590-01-260-0217	201L	19
31272	45617-13	3040-01-264-9554	201B	7
31272	45617-13	3040-01-264-9554	201L	24
31272	45618-10	5340-01-271-4281	201B	24
31272	45619-11	2590-01-260-0216	201B	14
31272	45619-11	2590-01-260-0216	201L	22
31272	45621-10	5306-01-269-6254	201B	8
31272	45621-10	5306-01-269-6254	201L	13
31272	45623-10	4010-01-271-2598	201B	15
31272	45623-10	4010-01-271-2598	201L	12
31272	45721-10	5342-01-260-0215	201B	9
31272	45721-10	5342-01-260-0215	201L	21
13445	46211-03	5940-01-180-3655	66	5
6W728	4660003-010P32		271	1
6W728	4660003-010P33		271	3
6W728	4660003-010P34		271	4
6W728	4660003-010P35		271	2
6W728	4660003-011P1		269	1
6W728	4660003-011P2		269	2
6W728	4660003-011P3		269	3
6W728	4660003-011P4		269	4
6W728	4660003-011P5		269	5
6W728	4660003-012P11		270	2
6W728	4660003-012P12		270	3
6W728	4660003-012P13		270	4
6W728	4660003-012P14		270	5
6W728	4660003-012P15		270	1
6W728	4660003-013P21		272	6
6W728	4660003-013P22		272	4

CAGE	PART NUMBER	STOCK NUMBER	FIG.	ITEM
6W728	4660003-013P23		272	3
6W728	4660003-013P24		272	1
6W728	4660003-013P25		272	5
6W728	4660003-013P26		272	2
6W728	4660310-002	2540-01-417-9362	167E	2
6W728	4660311-002	2540-01-419-0486	167E	2
6W728	4660451-002	2510-01-475-4743	173	3
6W728	4660453-002	2510-01-475-4735	174	8
6W728	4660545-011	5365-01-437-6323	183	21
6W728	4660545-012	5365-01-439-6498	183	20
6W728	4660567-002	5340-01-475-3668	181	21
6W728	4660608-001		167D	24
6W728	4660617-000	5330-01-524-8863	167D	10
6W728	4660639-000	5340-01-536-0557	141A	30
6W728	4660639-000	5340-01-536-0557	189A	10
6W728	4660639-000	5340-01-536-0557	189B	19
6W728	4660639-000	5340-01-536-0557	189C	14
6W728	4660639-000	5340-01-536-0557	189D	8
6W728	4660639-000	5340-01-536-0557	189I	20
6W728	4660639-000	5340-01-536-0557	189J	25
6W728	4660639-000	5340-01-536-0557	189K	14
6W728	4660639-000	5340-01-536-0557	189L	11
6W728	4660656-000	5340-01-531-4949	189G	38
6W728	4660680-001		189H	6
6W728	4660680-002	5340-01-524-9543	189K	19
6W728	4660680-002	5340-01-524-9543	189L	8
6W728	4660814-000	5640-01-475-3698	170	7
6W728	4660868-002	5365-01-436-1234	173	18
6W728	4660868-002	5365-01-436-1234	174	6
6W728	4660868-002	5365-01-436-1234	175	14
6W728	4660868-002	5365-01-436-1234	176	6
6W728	4660868-002	5365-01-436-1234	195	20
6W728	4660868-002	5365-01-436-1234	195B	4
6W728	4660868-002	5365-01-436-1234	195C	8
6W728	4660899-011	5365-01-433-3729	178	3
6W728	4660899-012	5365-01-433-3728	178	4
6W728	4660911-011	3040-01-433-6215	168	18
6W728	4660911-012	3040-01-433-6212	168	18
6W728	4660911-013	3040-01-433-6207	168	20
6W728	4660911-014	3040-01-433-6556	168	20
6W728	4660920-002	2540-01-435-7697	191	3
6W728	4660963-011	5365-01-438-7025	180	12
6W728	4660963-012	5365-01-438-7026	180	12
6W728	4660966-002	5340-01-473-3280	206	9
6W728	4660969-002	5365-01-474-7982	191	6

CAGE	PART NUMBER	STOCK NUMBER	FIG.	ITEM
6W728	4662065-010	2540-01-513-4068	249F	1
6W728	4662065-011	4710-01-513-4070	249I	5
6W728	4662065-012	4710-01-513-4015	249I	6
6W728	4662065-013	4710-01-513-3959	249I	16
6W728	4662065-014	4710-01-513-4030	249I	15
6W728	4662065-015	4730-01-513-4021	249I	18
6W728	4662065-016	4730-01-513-4027	249I	19
6W728	4662065-017	4730-01-513-4042	249I	3
6W728	4662065-018	6150-01-513-4094	249H	3
6W728	4662065-019	6150-01-513-4093	249H	2
6W728	4662065-023	5340-01-560-3248	249I	12
6W728	4662065-024	4730-01-513-4061	249I	9
6W728	4662065-025	4730-01-513-4003	249F	2
6W728	4662065-025	4730-01-513-4003	249I	2
6W728	4662065-026	4720-01-560-3079	249I	21
6W728	4662065-027	5975-01-513-4103	249H	1
6W728	4662400-003	3830-01-536-4083	KITS	42
6W728	4662402-003	5340-01-536-2054	196E	2
6W728	4662403-002	5340-01-560-4417	196E	1
6W728	4662414-002	5340-01-535-5705	196E	6
6W728	4662415-002	1005-01-561-0879	198	15
6W728	4662416-002	5340-01-535-5708	196E	3
6W728	4662418-002	5340-01-536-4213	196E	10
6W728	4668025-002	9905-01-435-5173	238	19
6W728	4668216-001	2540-01-418-0027	230	19
6W728	4668216-001	2540-01-418-0027	230	21
6W728	4668216-001	2540-01-418-0027	167M	15
6W728	4668360-000	5340-01-433-8444	192	18
6W728	4668360-000	5340-01-433-8444	193	12
6W728	4668360-000	5340-01-433-8444	194	2
6W728	4668360-000	5340-01-433-8444	195	5
6W728	4668367-28		202	11
6W728	4668368-25		202	12
6W728	4668621-002	5365-01-524-8800	169H	7
6W728	4668622-002	5365-01-524-8686	171	6
6W728	4668633-002	5340-01-530-6348	167D	26
6W728	4668901-001	5325-01-560-2690	206	4
6W728	4668914-001	5330-01-434-2852	192	12
6W728	4668914-001	5330-01-434-2852	193	9
6W728	4668914-001	5330-01-434-2852	194	3
6W728	4668914-001	5330-01-434-2852	195	3
6W728	4668923-003		211	6
6W728	4668945-001	5340-01-419-3312	169	14
62728	4668945-003	5340-01-444-9074	169	15
6W728	4668946-004	5360-01-444-1585	169	24

CAGE	PART NUMBER	STOCK NUMBER	FIG.	ITEM
6W728	4668946-005	5360-01-445-6258	169	12
6W728	4668947-001	5340-01-419-5188	167D	20
6W728	4668948 & 100214	5330-01-421-4967	BULK	47
6W728	4668948-016		170	2
6W728	4668948-24		170	1
6W728	4668956-001	3120-01-420-2257	169E	10
6W728	4668956-002	3120-01-419-9184	169E	27
6W728	4668958-002	5365-01-417-7792	189G	18
6W728	4668958-003	5365-01-474-6596	198	16
6W728	4668962-100		197	15
6W728	4668962-68		202	15
6W728	4668969-004	5340-01-436-4363	197	21
6W728	4668969-004	5340-01-436-4363	197A	21
6W728	4668969-004	5340-01-436-4363	200D	7
6W728	4668980-001	5340-01-134-5937	284	1
6W728	4668987-001	2540-01-474-8719	167	22
6W728	4668987-001	2540-01-474-8719	167A	20
6W728	4668988-000	5340-01-456-3917	189I	21
6W728	4668988-000	5340-01-456-3917	189J	26
6W728	4668988-000	5340-01-456-3917	189K	15
6W728	4668988-000	5340-01-456-3917	189L	12
60250	471-8084-S	2530-01-566-1525	124A	9
60250	471-8085-S	2530-01-566-1534	124A	9
51377	4735-42599-103	2930-01-420-8622	43	1
51377	4735-43782-18	2930-01-565-7984	44A	15
76599	4816-SS-305	4730-01-088-7798	14	4
12204	4883434AA	5330-00-409-5291	267	19
79470	49X4X4	4730-00-366-3011	140	15
19220	4A-M8639-52PK		167I	30
19200	4A-M8639-52PK	2540-01-564-2896	167T	36
19200	4A-M8639-52PK	2540-01-564-2896	169J	34
62380	5000286A	2540-01-476-6062	249A	11
6W728	50-00335	2930-01-431-5459	286	19
13499	500-1114-003	5310-01-042-8391	46	31
79136	5008-125MD	5325-00-514-1299	113	21
79136	5008-125MD	5325-00-514-1299	119	21
62380	5029842A	4720-01-475-2616	249A	10
60602	51078-1	5340-01-456-1500	84	11
70412	51-11	2540-01-199-7778	228	5
70412	51-11	2540-01-199-7778	228A	5
72447	5-174X	2520-01-359-8444	KITS	43
6H404	52-068	4730-01-569-9915	44A	5
95019	5-213X	2520-01-189-2135	KITS	44
62161	528236-05		299	7
80201	534059-60	5330-01-456-3884	113	11

CROSS REFERENCE INDEXES
PART NUMBER

CAGE	PART NUMBER	STOCK NUMBER	FIG.	ITEM
80201	534059-60	5330-01-456-3884	119	11
6W728	55-01996	5340-01-420-5376	274	5
6W728	55-03352	5340-01-459-9500	286	6
6W728	55-03357	5340-01-420-5373	275	13
6W728	55-03873	2510-01-460-2452	288	16
6W728	55-03880	5340-01-460-2443	287	6
6W728	55-03884	5340-01-460-2424	281	15
6W728	55-03885	5340-01-460-3305	281	15
6W728	55-03892	2510-01-459-9501	283	9
6W728	55-03903	5340-01-460-3304	281	5
6W728	55-03904	5340-01-460-2446	281	5
6W728	55-03924	5340-01-460-2420	281	8
6W728	55-03925	5340-01-460-2422	281	8
6W728	55-03987	5340-01-460-2455	281	12
6W728	55-04030	2510-01-460-4955	288	5
6W728	55-04054	2510-01-459-9496	274	11
6W728	55-04056	5340-01-474-6310	181	13
6W728	55-04057	5340-01-474-6331	181	3
6W728	55-04063	2510-01-459-9499	207	33
6W728	55-04205	5340-01-460-2421	282	3
6W728	55-04299	5340-01-460-3306	286	3
6W728	55-04300	5340-01-460-4954	286	14
6W728	55-05258	4940-01-461-7810	282	5
34623	5573534-27		29	17
34623	5577765-B	5995-01-201-4128	237	3
34623	5578306-B	5935-01-209-5594	73	3
34623	5579445-54	5365-01-381-4487	117	16
34623	5579445-55	5365-01-382-3676	117	16
34623	5579445-56	5365-01-382-0973	117	16
34623	5579445-57	5365-01-382-3710	117	16
34623	5579445-58	5365-01-382-1170	117	16
34623	5579445-59	5365-01-382-1235	117	16
34623	5579445-60	5365-01-382-1181	117	16
34623	5579445-61	5365-01-382-1135	117	16
34623	5579445-62	5365-01-382-1177	117	16
34623	5579445-63	5365-01-382-1162	117	16
34623	5579445-64	5365-01-382-3693	117	16
34623	5579445-65	5365-01-382-3726	117	16
34623	5579445-66	5365-01-382-1273	117	16
34623	5579445-67	5365-01-382-1166	117	16
34623	5579445-68	5365-01-382-1157	117	16
34623	5579445-69	5365-01-382-1240	117	16
34623	5579445-70	5365-01-382-3718	117	16
34623	5579445-71	5365-01-382-1132	117	16
34623	5579445-72	5365-01-382-1171	117	16

CAGE	PART NUMBER	STOCK NUMBER	FIG.	ITEM
34623	5579445-73	5365-01-382-3715	117	16
34623	5579445-74	5365-01-388-4449	117	16
34623	5579445-75	5365-01-382-3694	117	16
34623	5579445-76	5365-01-382-1159	117	16
34623	5579445-77	5365-01-382-3447	117	16
34623	5579445-78	5365-01-382-3700	117	16
34623	5579445-79	5365-01-382-1058	117	16
34623	5579453-44	5365-01-381-5166	117	19
34623	5579453-45	5365-01-381-9582	117	19
34623	5579453-46	5365-01-381-5174	117	19
34623	5579453-47	5365-01-381-6332	117	19
34623	5579453-48	5365-01-381-6120	117	19
34623	5579453-49	5365-01-380-5345	117	19
34623	5579453-50	5365-01-381-6151	117	19
34623	5579453-51	5365-01-381-6276	117	19
34623	5579453-52	5365-01-381-6223	117	19
34623	5579453-53	5365-01-381-6080	117	19
34623	5579453-54	5365-01-381-6250	117	19
34623	5579453-55	5365-01-381-6145	117	19
34623	5579453-56	5365-01-381-6174	117	19
34623	5579453-57	5365-01-381-6210	117	19
34623	5579453-58	5365-01-381-6292	117	19
34623	5579453-59	5365-01-381-6110	117	19
34623	5579453-60	5365-01-381-6158	117	19
34623	5579453-61	5365-01-381-6313	117	19
34623	5579453-62	5365-01-381-6226	117	19
34623	5579453-63	5365-01-381-6076	117	19
34623	5579453-64	5365-01-381-6303	117	19
34623	5579453-65	5365-01-381-6164	117	19
34623	5579453-66	5365-01-381-6197	117	19
34623	5579453-67	5365-01-381-6229	117	19
34623	5579453-68	5365-01-381-6086	117	19
34623	5579453-69	5365-01-381-6122	117	19
34623	5579453-70	5365-01-381-6154	117	19
34623	5579453-71	5365-01-381-6188	117	19
34623	5579453-72	5365-01-381-6317	117	19
34623	5579453-73	5365-01-381-6240	117	19
34623	5579453-74	5365-01-381-6112	117	19
34623	5579453-75	5365-01-381-6258	117	19
34623	5579453-76	5365-01-381-6165	117	19
34623	5579453-77	5365-01-381-6211	117	19
34623	5579453-78	5365-01-381-9588	117	19
34623	5579453-79	5365-01-438-1556	117	19
34623	5579453-80	5365-01-381-6113	117	19
34623	5579453-81	5365-01-381-6261	117	19

CAGE	PART NUMBER	STOCK NUMBER	FIG.	ITEM
34623	5579453-82	5365-01-381-6175	117	19
34623	5579453-83	5365-01-381-6278	117	19
05BU0	55845-4	4210-01-442-8750	266H	4
05BU0	55845-4	4210-01-442-8750	266I	3
05BU0	55845-4	4210-01-442-8750	266J	15
05BU0	55845-4	4210-01-442-8750	266L	9
05BU0	55845-4	4210-01-442-8750	266N	10
34623	5585143-B	5365-01-252-8026	165	27
34623	5588767-26		31	12
34623	5590001-C	5340-01-218-7739	204	33
34623	5591577-B	5365-01-252-9214	163	12
34623	5591577-B	5365-01-252-9214	163A	13
34623	5593493-C	5340-01-466-2425	266B	18
34623	5594101-C	5340-01-297-2800	33	6
34623	5594531-B	5365-01-414-2902	113	23
34623	5594531-B	5365-01-414-2902	119	23
19220	5631-11-DG	2590-01-563-3677	167I	20
19200	5631-11-DG	2590-01-563-3677	167T	55
19200	5631-11-DG	2590-01-563-3677	169J	52
19220	565698-4	5315-01-300-3012	166A	24
19220	565698-4	5315-01-300-3012	167B	24
34623	5715976G1	2590-01-466-7250	196B	6
19207	57K0107	2510-01-364-3120	KITS	47
19207	57K0155	2540-01-329-8075	227D	KIT
19207	57K0156	2540-01-329-8072	227	KIT
19207	57K0157	2540-01-329-8073	227B	KIT
19207	57K0160	2540-01-450-4022	227B	KIT
19207	57K0161	2540-01-412-0929	227D	KIT
19207	57K0162	2540-01-399-4692	227	KIT
19207	57K0236	5180-01-357-9692	295	KIT
19207	57K0240	5330-01-361-8014	KITS	48
19207	57K0241	5330-01-361-8015	KITS	49
19207	57K0242	2530-01-361-8012	KITS	50
19207	57K0266	5180-01-389-7561	296	KIT
19207	57K0267	5180-01-387-5455	299	KIT
19207	57K0268	5180-01-389-7560	299	KIT
19207	57K0297	2640-01-419-6205	KITS	51
19207	57K1640	5340-01-410-7036	263	KIT
34623	57K3205	2530-01-413-8886	KITS	52
19207	57K3218	5180-01-408-7050	301	KIT
19207	57K3219	5180-01-410-8467	301	KIT
19207	57K3222	2540-01-431-1338	KITS	53
19207	57K3238	5980-01-438-8939	KITS	54
19207	57K3242	2590-01-429-3007	264	KIT
19207	57K3243	2510-01-433-8551	266	KIT

CAGE	PART NUMBER	STOCK NUMBER	FIG.	ITEM
19207	57K3489	5330-01-459-6477	KITS	55
19207	57K3493	2540-01-538-4388	266C	KIT
19207	57K3494	2540-01-476-0522	266C	KIT
19207	57K3496	2540-01-434-8600	227	KIT
19207	57K3497	2540-01-475-4919	249E	KIT
19207	57K3500	2540-01-434-8602	227B	KIT
19207	57K3501	2540-01-434-8598	227D	KIT
19207	57K3512	2530-01-455-9330	KITS	55A
19207	57K3515	2530-01-457-1337	KITS	56
19207	57K3522	2520-01-439-6831	KITS	57
19207	57K3527	2530-01-443-3405	KITS	58
19207	57K3540	2520-01-459-8531	KITS	59
19207	57K3542	5340-01-455-8700	262	KIT
19207	57K3548	2520-01-461-7077	KITS	60
19207	57K3553	2990-01-496-3766	252	KIT
19207	57K3559	2520-01-475-1083	KITS	61
19207	57K3562	2590-01-480-5656	252H	KIT
34623	57K3565	2530-01-477-4194	KITS	69
19207	57K3568	2815-01-439-8164	1	1
19207	57K3570	2520-01-489-0850	KITS	62
19207	57K4387	2510-01-491-6919	265	KIT
19207	57K4389	5330-01-495-9370	56	3
19207	57K4399	2590-01-529-9541	264	KIT
19207	57K4403	2540-01-539-1558	KITS	63
19207	57K4470	2510-01-498-4996	266D	KIT
19207	57K4882	2590-01-554-3458	KITS	64
19207	57K4899		KITS	65
19207	57K4907	2990-01-570-8973	KITS	66
19200	57KTBDOGPK		265L	KIT
60602	59267-1	5355-01-447-9655	84	3
34623	5934835B1	2510-01-432-9896	141	4
34623	5934955B1	2510-01-462-5010	141	17
81343	6 100110B	4730-01-048-7873	29	6
81343	6 100115B	4730-01-048-5260	29	5
34623	6000329-8		28	40
34623	6000331-9.85		28	39
34623	6005274-B1	2510-01-423-2877	154	3
34623	6005790-A	2520-01-413-2595	83	1
34623	6019768-1	2540-01-560-2757	213A	24
34623	6023082-11.25		189J	32
34623	6023082-11.25		189L	3
34623	6023083-3.5		189J	33
34623	6023083-3.5		189L	21
34623	6025205-1		202B	8
34623	6029020-3		189J	17

CROSS REFERENCE INDEXES
PART NUMBER

CAGE	PART NUMBER	STOCK NUMBER	FIG.	ITEM
34623	6029020-3		189M	7
34623	6031218G1	2990-01-565-9400	35	9
34623	6033320-C	2590-01-566-3635	144A	20
34623	6037172-30IN		138C	14
34623	6037172-35IN		138C	7
34623	6037172-60IN		138C	10
34623	6039219-1.86	5365-01-568-3403	167T	50
34623	6039219-1.86	5365-01-568-3403	169J	46
34623	6039219-2.14	5365-01-568-4001	167T	51
34623	6039219-2.14	5365-01-568-4001	169J	47
34623	6039518-12		170A	7
34623	6042796-7.5IN		103A	2
34623	6043145-32IN		138C	6
34623	6043146-32IN		138C	13
34623	6043147-60IN		138C	8
34623	6043355-20.5IN		103A	3
97271	606279-2	2520-01-574-4828	116A	9
64829	62309-14	5331-00-171-6649	128	5
19220	6411B	5340-00-489-5684	204	40
19220	6411B	5340-00-489-5684	205A	8
19220	6411B	5340-00-489-5684	207A	43
6W728	6430528-05M1	5310-01-564-2919	167Q	4
6W728	6430528-05M1	5310-01-564-2919	266F	8
6W728	6430529-06M1	5310-01-563-3837	265H	12
6W728	6430679-200M1	9515-01-544-2262	189B	14
6W728	6430680-200M1	9515-01-544-2269	189A	16
6W728	6430681-200M1	5340-01-536-0607	189B	25
0UY67	6430710-02M1	2540-01-536-1421	210B	6
6W728	6430718-200M1	5340-01-535-8780	189B	24
6W728	6430718-200M1	5340-01-535-8780	189J	31
6W728	6430720-01M1	2540-01-434-6622	195	7
6W728	6430929-01M1	2540-01-434-6625	193	7
6W728	6430930-01M1	2540-01-434-5235	192	11
6W728	6431262-01M1	2540-01-525-3627	167E	7
6W728	6431267-01M1	2540-01-525-3630	167E	7
6W728	6431368-01M2	2540-01-535-0837	167	27
6W728	6431368-01M3	2540-01-535-0836	167	27
6W728	6431369-01M2	2540-01-535-0852	167A	24
6W728	6431369-01M3	2540-01-535-0851	167A	24
6W728	6431468-05M1		265A	6
6W728	6431493-200M1	9515-01-536-1118	196F	13
6W728	6431495-200M1	9515-01-537-0521	196F	6
6W728	6431496-200M1	9515-01-538-2843	196F	10
6W728	6431500-200M1	9515-01-538-2875	196F	12
6W728	6431560-200M1	5340-01-535-8684	196F	17

CAGE	PART NUMBER	STOCK NUMBER	FIG.	ITEM
6W728	6431561-200M1	5340-01-535-6359	196F	7
6W728	6431569-01M1	2590-01-560-2698	197A	11
6W728	6431570-01M1	5360-01-551-0831	197A	15
6W728	6431571-01M1	5360-01-551-0841	197A	15
6W728	6431573-01M1	2540-01-560-3654	197A	8
6W728	6431611-200M1	5340-01-535-8702	196F	14
6W728	6431611-200M1	5340-01-535-8702	265C	8
6W728	6431612-200M1	5340-01-536-0543	196F	16
6W728	6431613-200M1	9515-01-538-9578	196F	8
6W728	6431614-200M1	9515-01-536-0645	196F	15
6W728	6431616-200M1	5340-01-535-9424	196F	18
6W728	6431616-200M1	5340-01-535-9424	265C	1
6W728	6431617-200M1	5340-01-535-6843	196F	20
6W728	6431617-200M1	5340-01-535-6843	265C	1
6W728	6431637-200M1	5340-01-536-0005	196F	32
6W728	6431637-200M1	5340-01-536-0005	265C	11
6W728	6431638-200M1	3040-01-535-9715	196F	4
6W728	6431639-200M1	5340-01-535-5662	189G	33
6W728	6431639-200M1	5340-01-535-5662	196F	29
6W728	6431642-200M1	5340-01-535-5671	196F	23
6W728	6431644-200M1	5340-01-535-5666	196F	27
6W728	6431645-200M1	5340-01-536-0494	196F	28
6W728	6431647-200M1	5340-01-535-5640	196F	24
6W728	6431768-002	5340-01-536-0999	196E	9
6W728	6431807-118	5305-01-539-1128	196E	8
6W728	6432253-200M1	9515-01-536-1260	189I	12
6W728	6432256-01M1	2510-01-540-3430	167D	1
6W728	6432257-200M1	2510-01-535-6000	210B	8
6W728	6432258-200M1	2510-01-535-6001	210B	7
6W728	6432265-01M1	2510-01-560-2380	167D	14
6W728	6432284-200M1	9515-01-544-2279	189B	4
6W728	6432285-200M1	9515-01-544-2303	189A	3
6W728	6432286-200M1	9515-01-544-2295	189B	21
6W728	6432287-200M1	9515-01-544-2299	189A	7
6W728	6432288-200M1	9515-01-544-2303	189A	2
6W728	6432288-200M1	9515-01-544-2303	189B	5
6W728	6432288-200M1	9515-01-544-2303	189J	5
6W728	6432310-200M1	9515-01-544-2256	189C	9
6W728	6432361-200M1	9515-01-538-3506	189B	17
6W728	6432361-200M1	9515-01-538-3506	189J	19
6W728	6432362-200M1	9515-01-538-3523	189A	8
6W728	6432362-200M1	9515-01-538-3523	189I	10
6W728	6432427-200M1	2540-01-536-4078	189G	22
6W728	6432428-200M1	2540-01-536-3021	189G	22
6W728	6432429-200M1	9515-01-538-4337	189G	6

CAGE	PART NUMBER	STOCK NUMBER	FIG.	ITEM
6W728	6432430-200M1	9515-01-536-4092	189G	6
6W728	6432432-200M1	9515-01-538-2884	189H	2
6W728	6432433-200M1	9515-01-538-3042	189H	2
6W728	6432434-200M1	5340-01-536-0480	189G	15
6W728	6432435-200M1	2540-01-536-4093	210B	5
6W728	6432436-200M1	2540-01-536-5762	210B	4
6W728	6432437-200M1	2540-01-537-1090	210B	1
6W728	6432438-200M1	9515-01-538-3499	189B	1
6W728	6432438-200M1	9515-01-538-3499	189J	36
6W728	6432451-200M1	2540-01-536-5776	210B	5
6W728	6432458-01M1	5310-01-560-2745	197A	14
6W728	6432459-01M1	5355-01-560-2999	197A	13
6W728	6432460-01M1	5315-01-560-3540	197A	12
6W728	6432495-01M1	5340-01-560-3953	189A	13
6W728	6432495-01M1	5340-01-560-3953	189B	16
6W728	6432495-01M1	5340-01-560-3953	189C	11
6W728	6432495-01M1	5340-01-560-3953	189D	10
6W728	6432495-01M1	5340-01-560-3953	189I	13
6W728	6432495-01M1	5340-01-560-3953	189J	15
6W728	6432495-01M1	5340-01-560-3953	189K	11
6W728	6432495-01M1	5340-01-560-3953	189L	13
6W728	6432497-01M1		265G	11
6W728	6432501-01M1	5340-01-563-4700	265G	6
6W728	6432502-200M1	5340-01-563-4979	265H	5
6W728	6432515-01M1	3020-01-564-2317	265G	7
6W728	6432516-01M1	3020-01-564-2324	265G	8
6W728	6432525-01M1	5920-01-552-4502	265J	17
6W728	6432525-01M1	5920-01-552-4502	265K	5
6W728	6432525-200M1	5340-01-535-8707	189C	16
6W728	6432526-01M1	6140-01-556-4352	265J	7
6W728	6432528-200M1	1290-01-552-4497	265H	17
6W728	6432531-01M1	6150-01-560-0229	265H	7
6W728	6432531-01M1	6150-01-560-0229	265J	8
6W728	6432546-01M1	5306-01-563-4924	265J	6
6W728	6432550-200M1	5340-01-535-7729	189A	11
6W728	6432550-200M1	5340-01-535-7729	189B	18
6W728	6432550-200M1	5340-01-535-7729	189C	13
6W728	6432550-200M1	5340-01-535-7729	189D	7
6W728	6432550-200M1	5340-01-535-7729	189I	19
6W728	6432550-200M1	5340-01-535-7729	189J	27
6W728	6432550-200M1	5340-01-535-7729	189K	13
6W728	6432550-200M1	5340-01-535-7729	189L	10
6W728	6432564-200M1	5340-01-536-4636	189D	6
6W728	6432564-200M1	5340-01-536-4636	189L	7
6W728	6432565-200M1	5340-01-535-8707	189K	18

CAGE	PART NUMBER	STOCK NUMBER	FIG.	ITEM
6W728	6432570-200M1	5340-01-535-8682	189G	15
6W728	6432572-200M1	5340-01-536-0605	189G	31
6W728	6432585-200M1	2510-01-537-1092	189G	28
6W728	6432588-200M1	2510-01-536-3001	189G	28
6W728	6432589-01M1		167D	11
6W728	6432590-01M1	5330-01-560-2670	167D	13
6W728	6432599-200M1	9515-01-544-2736	189C	2
6W728	6432610-200M1	9515-01-538-3535	189B	7
6W728	6432617-200M1	9515-01-538-3531	189F	1
6W728	6432623-200M1	9515-01-538-3565	189F	1
6W728	6432624-200M1	5340-01-536-4362	189F	5
6W728	6432625-200M1	5340-01-535-8280	189G	13
6W728	6432625-200M1	5340-01-535-8280	189P	21
6W728	6432626-200M1	9515-01-538-3191	202A	7
6W728	6432629-200M1	9515-01-538-3132	202A	7
6W728	6432630-200M1	2540-01-541-7309	189A	23
6W728	6432634-200M1	9515-01-538-3560	189C	8
6W728	6432639-200M1	9515-01-538-3564	189D	16
6W728	6432641-200M1	9515-01-538-3201	189E	4
6W728	6432646-200M1	9515-01-538-3205	189E	4
6W728	6432650-200M1	9515-01-538-3550	189A	20
6W728	6432651-200M1		189I	29
6W728	6432658-200M1	5340-01-536-0547	189G	13
6W728	6432658-200M1	5340-01-536-0547	189P	21
6W728	6432661-200M1	9515-01-536-4210	189G	30
6W728	6432670-200M1	9515-01-536-6163	189G	25
6W728	6432673-200M1	9515-01-538-3217	189E	2
6W728	6432684-200M1	9515-01-552-1631	197A	16
6W728	6432686-200M1	9515-01-552-1719	197A	27
6W728	6432698-200M1	5365-01-560-3051	167D	9
6W728	6432699-200M1	5365-01-560-2670	167D	12
6W728	6432702-200M1	5340-01-536-4269	189A	17
6W728	6432702-200M1	5340-01-536-4269	189C	17
6W728	6432702-200M1	5340-01-536-4269	189D	5
6W728	6432706-01M1	5330-01-560-4055	167D	18
6W728	6432706-02M1		167D	18
6W728	6432711-200M1	2590-01-560-9348	167C	3
6W728	6432713-200M1	2540-01-535-9671	189G	32
6W728	6432714-200M1	2540-01-536-1442	189G	32
6W728	6432718-200M1	9515-01-538-2319	189E	2
6W728	6432722-200M1	9515-01-536-4108	189G	37
6W728	6432731-01M1	2510-01-560-4018	167D	17
6W728	6432732-01M1	2540-01-560-2711	167D	16
6W728	6432733-01M1		167D	19
6W728	6432733-02M1		167D	21

CAGE	PART NUMBER	STOCK NUMBER	FIG.	ITEM
6W728	6432733-03M1		167D	23
6W728	6432759-200M1	2540-01-553-5282	202A	13
6W728	6432761-200M1	2540-01-553-5303	202A	13
6W728	6432762-200M1	2510-01-535-2778	167C	1
6W728	6432763-200M1	2510-01-535-2780	167C	1
6W728	6432764-200M1	2510-01-535-2781	167C	1
6W728	6432765-200M1	2510-01-535-2779	167C	1
6W728	6432768-200M1	9501-01-538-3566	189G	12
6W728	6432769-200M1	9515-01-538-3570	189G	12
6W728	6432772-200M1	5340-01-535-5700	189E	5
6W728	6432773-200M1	5340-01-536-0653	189E	5
45829	6432774-01M1	5365-01-551-0810	197A	31
6W728	6432776-200M1	5340-01-535-7920	202A	6
6W728	6432777-200M1	5340-01-536-0506	202A	6
6W728	6432783-200M1	9515-01-538-4301	189G	1
6W728	6432786-200M1	9515-01-538-4310	189G	3
6W728	6432862-200M1	6160-01-563-7506	265J	4
6W728	6432864-200M1	2540-01-542-5421	188A	3
6W728	6432865-200M1	2540-01-542-8249	188B	3
6W728	6432866-200M1	2540-01-542-5492	188G	4
6W728	6432867-200M1	2540-01-542-6059	188H	2
6W728	6432868-200M1	2540-01-542-8219	188G	1
6W728	6432872-200M1	2540-01-542-5768	188D	8
6W728	6432874-200M1	2540-01-542-4973	188F	3
6W728	6432875-200M1	2540-01-542-5777	188D	3
6W728	6432878-01M1	5330-01-563-5636	265H	6
6W728	6432884-01M1	5305-01-564-1659	265H	4
6W728	6432889-200M1	2540-01-546-4279	188E	5
6W728	6432894-200M1	2540-01-542-5996	188C	1
6W728	6432911-200M1	2540-01-546-4286	188C	3
6W728	6432911-200M1	2540-01-546-4286	188E	6
6W728	6432915-200M1	2540-01-542-6032	188D	7
6W728	6432924-200M1	2540-01-547-2665	188C	2
6W728	6433221-200M1	2510-01-560-9337	197A	7
6W728	6433249-01M1	3020-01-564-3309	265G	12
6W728	6433255-01M1	1005-01-563-6476	265G	1
6W728	6433260-01M1	5340-01-536-8390	196E	1
6W728	6433328-01M1	5340-01-536-8755	KITS	79
6W728	6433342-01M1		167	1
6W728	6433343-01M1		167	1
6W728	6433433-200M1		189O	25
6W728	6433434-200M1		189P	14
6W728	6433435-200M1		189O	27
6W728	6433436-200M1		189O	25
6W728	6433499-200M1	5340-01-542-0506	188I	4

CAGE	PART NUMBER	STOCK NUMBER	FIG.	ITEM
6W728	6433860-200M1		202B	24
6W728	6433862-200M1		189P	14
6W728	6433864-200M1		202B	6
6W728	6433867-200M1		189Q	4
6W728	6434101-16M1	5310-01-564-1632	265G	3
6W728	6434121-200M1		189O	10
6W728	6434139-200M1		189O	14
6W728	6434240-200M1	9515-01-552-7026	195A	4
6W728	6434241-200M1	9515-01-552-2159	195C	1
6W728	6434242-01M1	6105-01-552-5659	265G	2
6W728	6434243-200M1	9515-01-552-7022	195A	9
6W728	6434245-200M1	9515-01-552-7037	195A	11
6W728	6434368-200M1	9515-01-552-7042	195C	2
6W728	6434369-400M1	5310-01-552-8302	195B	7
6W728	6434369-400M1	5310-01-552-8302	195C	3
6W728	6434829-01M1	5340-01-563-6839	265I	2
6W728	6434835-200M1	9515-01-552-7048	195A	5
6W728	6434836-200M1	9515-01-552-7068	195B	1
6W728	6434875-200M1	9515-01-552-1624	195A	6
6W728	6434950-200M1		189O	9
6W728	6434955-200M1		189O	22
6W728	6434958-200M1		189O	24
6W728	6434959-200M1		189O	16
6W728	6434960-200M1		189O	1
6W728	6435007-200M1	2540-01-563-5875	188J	5
6W728	6435008-200M1	2540-01-563-6242	188K	4
6W728	6435010-200M1	2540-01-563-7530	188O	4
6W728	6435011-200M1	2540-01-563-8903	188N	10
6W728	6435012-200M1	2540-01-563-6254	188N	17
6W728	6435013-200M1	2540-01-563-5643	188N	14
6W728	6435015-200M1	2540-01-563-8850	188M	9
6W728	6435016-200M1	2540-01-563-5671	188L	1
6W728	6435017-200M1	2540-01-563-6551	188N	3
6W728	6435017-200M1	2540-01-563-6551	188O	1
6W728	6435019-200M1	2590-01-563-6268	188N	16
6W728	6435031-200M1		189O	28
6W728	6435032-200M1		189O	8
6W728	6435033-200M1		189O	26
6W728	6435049-01M1	6140-01-556-4352	265J	5
6W728	6435090-200M1		167L	2
6W728	6435092-200M1		167M	5
6W728	6435092-200M1		169C	11
6W728	6435094-01M1	2510-01-564-3304	167O	9
6W728	6435094-01M1	2510-01-564-3304	169D	4
6W728	6435095-200M1		169A	2

CROSS REFERENCE INDEXES
PART NUMBER

CAGE	PART NUMBER	STOCK NUMBER	FIG.	ITEM
6W728	6435100-01M1		169E	30
6W728	6435101-200M1	2540-01-565-7257	169I	7
6W728	6435106-200M1	2540-01-564-2552	169I	7
6W728	6435123-01M1	5330-01-563-4578	265H	8
6W728	6435128-01M1		265A	5
6W728	6435139-200M1	5340-01-564-1216	169E	4
6W728	6435140-200M1	2590-01-564-2918	169E	26
6W728	6435141-200M1	2590-01-564-3177	169E	13
6W728	6435146-01M1	2510-01-545-5856	169E	32
6W728	6435148-200M1	2540-01-565-7586	167Q	7
6W728	6435149-200M1		169E	17
6W728	6435151-200M1	5340-01-564-3316	169E	19
6W728	6435156-200M1	5340-01-564-0475	169E	28
6W728	6435157-01M1	2540-01-564-0509	169E	30
6W728	6435193-01M1	5340-01-564-2924	167Q	19
6W728	6435205-200M1	5340-01-564-3380	167M	14
6W728	6435205-200M1	5340-01-564-3380	169C	12
6W728	6435211-200M1		167L	2
6W728	6435216-01M1	2590-01-564-0773	167P	12
6W728	6435217-01M1		167P	14
6W728	6435218-01M1	5340-01-564-2797	167Q	19
6W728	6435220-200M1	2540-01-564-2935	167Q	7
6W728	6435222-200M1	2540-01-563-5801	188M	4
6W728	6435223-200M1	2540-01-563-5799	188L	7
6W728	6435224-200M1	2540-01-563-7234	188N	8
6W728	6435225-200M1	2540-01-563-6567	188O	11
6W728	6435226-200M1	2540-01-564-2875	167M	14
6W728	6435226-200M1	2540-01-564-2875	169C	12
6W728	6435228-01M1	5340-01-564-3407	169H	6
6W728	6435234-01M1	2510-01-564-2109	167O	9
6W728	6435234-01M1	2510-01-564-2109	169D	4
6W728	6435235-01M1	5340-01-564-3184	167Q	18
6W728	6435236-200M1	2540-01-565-7305	169I	8
6W728	6435240-200M1	2540-01-565-7579	169I	8
6W728	6435258-200M1	2540-01-564-1235	169I	2
6W728	6435262-01M1	5340-01-564-0513	169D	3
6W728	6435263-01M1		169E	31
6W728	6435264-200M1		169A	2
6W728	6435286-200M1	5340-01-564-2966	167M	12
6W728	6435287-200M1	5340-01-564-3385	167M	13
6W728	6435293-01M1	5340-01-564-2961	169G	4
6W728	6435298-01M1	5340-01-564-2816	167N	6
6W728	6435298-01M1	5340-01-564-2816	169B	9
6W728	6435303-200M1		167M	5
6W728	6435303-200M1		169C	11

CAGE	PART NUMBER	STOCK NUMBER	FIG.	ITEM
6W728	6435307-200M1		169E	16
6W728	6435309-200M1	5340-01-564-0500	169C	9
6W728	6435310-200M1	5340-01-564-0488	169C	10
6W728	6435313-01M1	5340-01-564-3122	167P	13
6W728	6435313-01M1	5340-01-564-3122	169F	19
6W728	6435314-01M1	5340-01-564-0751	167P	10
6W728	6435314-01M1	5340-01-564-0751	169F	22
6W728	6435317-01M1	5340-01-564-2015	169F	18
6W728	6435318-01M1	5340-01-564-1263	167N	6
6W728	6435318-01M1	5340-01-564-1263	169B	9
6W728	6435320-200M1		167M	12
6W728	6435321-200M1	5340-01-564-3368	167M	13
6W728	6435322-200M1		169C	9
6W728	6435323-200M1		169C	10
6W728	6435324-02M1	5365-01-564-2001	167P	21
6W728	6435324-03M1	5365-01-564-2060	167P	21
6W728	6435341-01M1	5365-01-564-1212	169F	13
6W728	6435342-01M1	5365-01-564-0781	169F	20
6W728	6435350-200M1	5340-01-564-2412	167Q	16
6W728	6435405-01M1		169F	9
6W728	6435451-200M1	6160-01-563-2976	265J	13
6W728	6435453-200M1	6160-01-563-2953	265J	1
6W728	6435488-01M1		169B	1
6W728	6435488-01M1		169E	15
6W728	6435489-200M1	5340-01-563-7568	188N	18
6W728	6435490-01M1	5340-01-565-7654	167Q	6
6W728	6435491-01M1	2590-01-564-0785	169H	14
6W728	6435627-01M1	5340-01-564-0794	167P	17
6W728	6435628-01M1	5365-01-564-3944	169F	14
6W728	6435629-01M1	5340-01-565-2595	167P	6
6W728	6435629-01M1	5340-01-565-2595	169F	6
6W728	6435630-01M1	5340-01-564-2822	167Q	17
6W728	6435643-200M1	2590-01-564-2964	169I	9
6W728	6435644-200M1	2590-01-564-1208	169I	9
6W728	6435645-01M1		169E	22
6W728	6435651-01M1	5340-01-564-2411	167O	10
6W728	6435651-02M1		167O	10
6W728	6435652-01M1	5340-01-564-2788	167O	2
6W728	6435652-01M1	5340-01-564-2788	169D	2
6W728	6435658-01M1	5365-01-564-0825	169G	8
6W728	6435659-01M1	5340-01-564-1284	169G	7
6W728	6435668-01M1	5365-01-564-0776	169G	8
6W728	6435669-01M1	5340-01-564-2148	169G	7
6W728	6435676-01M1	2590-01-564-3310	169H	14
6W728	6435677-01M1	2590-01-564-0498	266F	5

CAGE	PART NUMBER	STOCK NUMBER	FIG.	ITEM
6W728	6435678-01M1	5340-01-564-3181	266F	5
6W728	6435679-01M1	2590-01-564-3169	169H	16
6W728	6435680-01M1	2590-01-564-0820	169H	16
6W728	6435682-01M1	2540-01-564-2759	167N	2
6W728	6435683-01M1	2540-01-564-3981	167N	1
6W728	6435684-01M1		167N	9
6W728	6435685-01M1	2540-01-564-2842	167N	8
6W728	6435686-01M1	2540-01-564-2407	167N	10
6W728	6435686-01M1	2540-01-564-2407	169B	2
6W728	6435687-01M1	2540-01-564-2765	169B	3
6W728	6435688-01M1	2540-01-564-0903	169B	1
6W728	6435689-01M1	2540-01-564-2119	169B	5
6W728	6435690-01M1	2540-01-564-3188	169B	4
6W728	6436911-200M1	5340-01-564-3354	167M	4
6W728	6437012-200M1		169E	23
6W728	6437013-200M1		169E	14
6W728	6437057-200M1	5340-01-564-0772	167Q	9
6W728	6437068-200M1		167Q	10
6W728	6437069-200M1		167Q	10
6W728	6437133-01M1	5340-01-564-2921	169H	2
6W728	6437172-01M1	5330-01-552-8710	167L	3
6W728	6437172-01M1	5330-01-552-8710	169A	3
6W728	6437172-02M1	5330-01-552-0708	BULK	54
6W728	6437248-01M1	6110-01-552-4505	265H	10
6W728	6437560-200M1	5340-01-563-4698	265G	6
6W728	6437561-01M1	3020-01-563-2216	265G	12
6W728	6437652-200M1		265G	11
6W728	6437880-200M1	5340-01-563-4462	265H	5
6W728	6437881-01M1	5330-01-563-5695	265H	6
6W728	6438242-200M1	2510-01-545-5865	167L	1
6W728	6438243-200M1	2510-01-545-5863	169A	1
6W728	6438244-200M1	2510-01-545-5861	167L	1
6W728	6438245-200M1	2510-01-545-5859	169A	1
6W728	6438800-01M1	1005-01-563-6481	265G	1
19220	6-5624-52		167H	11
19200	6-5624-52	2540-01-563-5843	167T	8
19200	6-5624-52	2540-01-563-5843	169J	8
62380	65759B	2930-01-475-3976	249A	34
81343	6-6 100202BA	4730-01-274-1825	29	4
81343	6-6-6 070429		225K	7
81343	6-6-6-130425B	4730-00-125-7979	29	7
63208	667-43	4730-01-473-5537	25	11
63208	667-69	4730-01-478-5151	25	6
24975	66X-3331	5310-01-250-7844	50	29
62380	67133A	5999-01-476-3674	249A	40

CAGE	PART NUMBER	STOCK NUMBER	FIG.	ITEM
62380	67133A	5999-01-476-3674	249C	3
62380	67134A	5999-01-475-0215	249A	32
62380	67582C	2540-01-501-2690	249A	31
82942	68-412121-1	5330-01-281-6523	BULK	27
70485	698W	5340-00-565-5378	196B	12
96881	6L11-F	3120-00-251-4172	196G	27
30780	6M16F82EDMXS	4730-01-522-1312	138C	15
19207	6TMF/TYPEI	6140-01-446-9498	66	23
19728	6X-4336		50	23
6W728	70-04659	4820-01-460-9079	KITS	80
6W728	70-04710	4130-01-420-8312	285	1
6W728	70-04710	4130-01-420-8312	286	12
6W728	70-04738	5340-01-420-5377	275	6
6W728	70-05237	2540-01-460-3302	286	11
6W728	70-05263	5340-01-460-9075	286	4
6W728	70-05428	4130-01-460-4956	288	4
6W728	70-05429	2540-01-461-5222	287	1
6W728	70-05432	2590-01-461-5213	279	6
6W728	70-05433	2510-01-475-4737	279	3
6W728	70-05466	2540-01-460-2428	275	3
6W728	70-06429	6150-01-512-6679	283	1
77335	71-510	5120-00-618-6902	298	14
04NP3	743-123-154	2610-01-333-7632	132	1
04NP3	750-110-215	2610-01-563-8328	132A	1
3B481	7530-1705	2540-01-516-8369	215	2
3NSN1	7-5624-52-DG	2540-01-563-5845	167G	13
12361	7-790-140853	5305-01-272-7422	100A	13
11083	7N7782	5935-01-150-8322	77	14
6W728	7P0013	5330-01-525-1972	BULK	23
6W728	7P0013-AR		211	5
62226	8.6046-01	2540-01-381-8392	216	1
62226	8.6046-02	2540-01-516-8389	216	1
62226	8.6272-01	2540-01-436-4175	215	2
62226	8.6272-01	2540-01-436-4175	216	1
62226	8.6272-01	2540-01-436-4175	217	1
62226	8.6272-01	2540-01-436-4175	217A	1
62226	8.6272-02	2540-01-476-9353	216	1
62226	8.6272-02	2540-01-476-9353	217	1
62226	8.6272-02	2540-01-476-9353	217A	1
60703	81087-5	4730-01-074-0060	228	26
60703	81087-5	4730-01-074-0060	228A	26
44MG9	82463A		249A	37
39428	8367A26	5120-01-053-4159	290	17
39428	8451A22		BULK	60
60703	846-50	4720-01-164-7803	BULK	11

CAGE	PART NUMBER	STOCK NUMBER	FIG.	ITEM
81343	8-6 100302BA	4730-01-091-2809	28	12
81343	8-6-100202BA	4730-01-095-7717	29	8
19207	8712289-4	5310-00-840-6222	133	15
19204	8712289-5	5310-00-044-3342	101	9
19204	8712289-5	5310-00-044-3342	141	14
19204	8712289-5	5310-00-044-3342	101A	10
19204	8712289-5	5310-00-044-3342	141A	20
13445	88587A	5310-01-185-7208	66	8
13445	88587A	5310-01-185-7208	67	2
81343	8-8-6 100425BA	4730-01-119-6895	28	16
62380	89093B	2540-01-475-3944	249A	33
76760	89331A	5325-01-358-7960	102	20
11083	8S4680	5330-00-493-3876	KITS	83
19728	8X-1681		50	22
19728	8X-179		50	59
19728	8X-3439		50	81
19728	8X-349		50	34
19728	8X-4678		50	19
19728	8X-830		50	61
98624	9002-00181-48	5331-01-194-8966	44	9
51377	9002-00741-58	5331-01-195-1500	44	8
39428	90096A581	5305-01-563-4897	266M	15
1EAW9	900-US-07301	4240-01-542-8160	201C	23
39428	90170A221	5315-01-398-6610	201H	9
1EAW9	901-US-07301-1	2540-01-543-0747	201C	5
1EAW9	901-US-07301-2	2590-01-542-5024	201C	11
1EAW9	901-US-07301-3	2540-01-542-6366	201C	24
1EAW9	901-US-07301-4	2540-01-542-6364	201C	21
1EAW9	901-US-07301-5	2590-01-542-0372	201C	18
1EAW9	901-US-07301-6		201C	15
24975	90-2206	2920-00-302-6342	KITS	92
24975	90-2225	2920-01-068-7182	KITS	93
24975	90-2836	5305-01-188-9707	KITS	94
24975	90-2837	2920-01-192-2956	KITS	95
24975	90-2838	2920-01-192-4473	KITS	96
19728	90-2840	3120-01-191-4637	KITS	97
24975	90-2841	2920-01-191-6534	KITS	98
62380	905782A	6150-01-475-1843	249A	13
41885	90619D	4730-01-346-1063	131	11
41885	90619D	4730-01-346-1063	131A	12
24975	90-816	2920-01-192-2959	KITS	91
6W728	91-00086	5305-01-465-2813	207	30
6W728	91-00086	5305-01-465-2813	287	5
6W728	91-00086	5305-01-465-2813	288	10
6W728	91-00160	5305-01-465-2811	288	7

CROSS REFERENCE INDEXES
PART NUMBER

CAGE	PART NUMBER	STOCK NUMBER	FIG.	ITEM
6W728	91-00164	5305-01-465-2820	279	9
39428	91251A382	5305-01-563-5532	265D	18
39428	91253A357	5305-01-563-3101	265B	19
39428	91280A534	5305-01-554-4493	126A	32
39428	91306A373	5305-01-573-3907	201I	1
1S0R6	91427EBKBC	2530-01-417-4908	131	2
41885	91428EBKBC	2530-01-417-8450	131	6
K1076	9145-105-00B	5310-01-127-2456	79	33
62380	91473A	2910-01-475-3937	249E	10
72447	915027-18	2530-01-566-0968	133	18
95019	919800-2109	2520-01-424-0425	109	1
13940	91-BS-78403-1E	5325-00-853-9713	226	5
13940	91-BS-78403-1E	5325-00-853-9713	249	3
13940	91-BS-78403-1E	5325-00-853-9713	249	8
13940	91-BS-78403-1E	5325-00-853-9713	227B	2
6W728	92-00007	5310-01-466-4461	282	2
6W728	92-00007	5310-01-466-4461	283	10
6W728	92-00065	5310-01-420-8727	274	7
6W728	92-00144	5310-01-463-2124	287	3
6W728	92-00145	5310-01-463-2122	288	6
07BY4	92210A638	5305-01-535-4716	196F	21
07BY4	92210A638	5305-01-535-4716	265B	10
24975	92-2923	5310-01-214-4955	50	50
07BY4	92949A632	5305-01-535-9887	196F	26
6W728	93-00004	5310-01-465-5111	274	6
6W728	93-00045	5310-01-465-5109	288	2
6W728	93-00052	5340-01-421-0461	286	10
6W728	93-00059	5310-01-463-0620	281	9
19220	9-300-U-L	2540-01-197-4900	169	3
19220	9-300-U-L	2540-01-197-4900	166A	22
19220	9-300-U-L	2540-01-197-4900	167E	24
19220	9-300-U-R	2540-01-196-5317	169	3
19220	9-300-U-R	2540-01-196-5317	166A	22
19220	9-300-U-R	2540-01-196-5317	167B	22
19220	9-300-U-R	2540-01-196-5317	167E	24
39428	9306K14	5340-01-419-5188	170	13
39428	9306K14	5340-01-419-5188	196	22
39428	9306K14	5340-01-419-5188	197	19
39428	9306K14	5340-01-419-5188	197A	2
39428	9306K14	5340-01-419-5188	200E	2
60250	93-8171	5340-01-566-1120	124A	2
60250	93-8172	2590-01-566-1391	124A	2
60250	93-8210	2590-01-566-1327	124A	8
60250	93-8211	2590-01-566-1809	124A	8
6W728	94-00004	5305-01-465-2818	281	1

CROSS REFERENCE INDEXES
PART NUMBER

CAGE	PART NUMBER	STOCK NUMBER	FIG.	ITEM
6W728	94-00004	5305-01-465-2818	282	4
6W728	94-00031	5305-01-420-6769	284	8
6W728	94-00031	5305-01-420-6769	286	8
6W728	94-00077	5305-01-461-8147	288	17
6W728	94-00086	5305-01-461-8225	287	4
6W728	94-00140	5305-01-466-4358	281	6
6W728	94-00150	5305-01-465-2825	279	1
76700	94252A	2530-01-488-6147	138A	6
24617	9436356-AR		249D	7
24617	9436711-2.0		249A	24
24617	9436711-2.0		249D	5
24617	9436711-2.5		249A	7
24617	9438218-6.3		27	24
07BY4	94850A129	5310-01-564-2063	167N	7
07BY4	94850A129	5310-01-564-2063	169B	10
39428	95390A422	5325-01-554-8797	266J	11
39428	95390A422	5325-01-554-8797	266L	16
39428	95390A422	5325-01-554-8797	266N	6
39428	95630A480		167T	22
39428	95630A480		167T	32
39428	95630A480		169J	17
39428	95795A012	5310-01-533-6150	266F	12
39428	95795A012	5310-01-533-6150	266I	10
6W728	96-00010	5320-01-422-1224	286	5
6W728	96-00034	5320-01-474-9677	286	1
6W728	96-00035	5320-01-422-1712	286	2
0B8Y6	9606060-004	6680-01-484-5367	64	4
54646	974HW-1750	5340-01-565-9385	141A	29
54646	974JG-1500	5340-01-568-8432	141A	32
0GZB7	983-0007	5310-01-495-8545	252F	10
0GZB7	983-0027		252F	9
0GZB7	983-0070		225A	2
0GZB7	983-0070		252B	2
0GZB7	983-19-50025	4010-01-496-3987	225A	17
0GZB7	983-19-50025	4010-01-496-3987	252E	3
0GZB7	983-19-50711	4030-01-496-2315	225A	18
0GZB7	983-19-50711	4030-01-496-2315	252E	4
0GZB7	983-19-51202		252E	5
0GZB7	983-19-512023		225A	19
0GZB7	983-60-50085-A	3940-01-475-4983	225B	3
0GZB7	983-60-50085-A	3940-01-475-4983	252C	3
0GZB7	983-60-50089	5340-01-475-3650	225B	2
0GZB7	983-60-50089	5340-01-475-3650	252C	2
0GZB7	983-90-50115	5305-01-495-2914	225A	16
0GZB7	983-90-50115	5305-01-495-2914	252E	2

CAGE	PART NUMBER	STOCK NUMBER	FIG.	ITEM
0GZB7	983-90-50121	5305-01-495-1670	252F	12
0GZB7	983-90-50123	5305-01-495-2916	252F	13
0GZB7	983-90-50201	4710-01-475-3753	225B	1
0GZB7	983-90-50201	4710-01-475-3753	252C	1
0GZB7	983-WH11-001	5315-01-495-8461	225J	3
0GZB7	983-WH11-002	5340-01-496-0752	225J	7
0GZB7	983-WH11-003	5340-01-496-0756	225J	4
0GZB7	983-WH11-008	3830-01-506-8307	225I	3
0GZB7	983-WH11-010	3120-01-495-5549	225I	4
0GZB7	983-WH11-023	5325-01-495-3930	225I	13
0GZB7	983-WH11-025	5360-01-495-5710	225I	18
0GZB7	983-WH11-026		225J	8
0GZB7	983-WH11-028	3020-01-506-9172	225I	17
0GZB7	983-WH11-029	3120-01-495-5557	225I	19
0GZB7	983-WH11-034	3020-01-505-2366	225I	11
0GZB7	983-WH11-042	5340-01-495-4867	225J	11
0GZB7	983-WH11-043	5360-01-495-3945	225J	2
0GZB7	983-WH11-046	5310-01-495-8559	225J	5
0GZB7	983-WH11-048	3120-01-495-5563	225I	12
0GZB7	983-WH11-049	5310-01-495-8552	225I	9
0GZB7	983-WH11-088	3040-01-495-1286	225I	1
0GZB7	983-WH11-096	5360-01-495-3942	225I	14
0GZB7	983-WH11-097	5360-01-495-3951	225J	9
0GZB7	983-WH11-103	3020-01-505-5317	225I	15
0GZB7	983-WH11-200		225I	8
0GZB7	983-WH11-401	3040-01-495-1788	225I	6
0GZB7	983-WH11-402	3040-01-495-1374	225J	1
0GZB7	983-WH11-403	5340-01-498-8836	225J	10
0GZB7	983-WH11-404	2590-01-496-0116	225I	10
0GZB7	983-WH-8	2590-01-485-5455	225A	1
0GZB7	983-WH-8	2590-01-485-5455	252B	1
0GZB7	983-WH8-1		225A	6
0GZB7	983-WH8-1		252B	6
0GZB7	983-WH8-2		225A	5
0GZB7	983-WH8-2		252B	5
0GZB7	983-WH8-3		225A	7
0GZB7	983-WH8-3		252B	7
0GZB7	983-WH8-4		225A	3
0GZB7	983-WH8-4		252B	3
0GZB7	983-WH8-5		225A	4
0GZB7	983-WH8-5		252B	4
0GZB7	983-WH8-6		225A	8
0GZB7	983-WH8-6		252B	8
0ZM57	99221173P		150A	2
0GZB7	993-0002	5340-01-486-8886	252A	3

CROSS REFERENCE INDEXES
PART NUMBER

CAGE	PART NUMBER	STOCK NUMBER	FIG.	ITEM
0GZB7	993-0003	5340-01-487-0292	252A	2
0GZB7	993-0065		252F	4
0GZB7	993-75-50050CV	2590-01-494-3532	252E	1
0GZB7	993-97-50071	2540-01-496-3466	252F	1
0GZB7	994-74-1001	6150-01-485-4379	225E	1
0GZB7	994-90-50080 SL	4320-01-495-6971	225H	5
0GZB7	994-90-50080 SS	4320-01-495-6948	225H	4
0GZB7	994-95000470-C	4810-01-485-8109	225G	10
0GZB7	994-97-50071	2540-01-496-0001	225H	1
0GZB7	994-W002	2590-01-485-8343	225A	15
0GZB7	9DD000667	5310-01-495-8556	252F	7
19220	9-M8639-L	2540-01-569-1135	167U	25
19220	9-M8639-R		167U	25
0GZB7	9P000233/8	4730-01-495-5135	252F	5

By Order of the Secretary of the Army:

DENNIS J. REIMER
General, United States Army
Chief of Staff

Official:

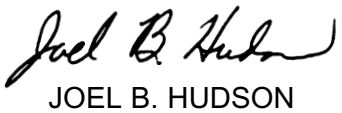

JOEL B. HUDSON
Administrative Assistant to the
Secretary of the Army
0126703

By Order of the Secretary of the Air Force:

RONALD R. FOGLEMAN
General, United States Air Force
Chief of Staff

Official:

HENRY VICCELLIO, JR.
General, United States Air Force
Commander, Air Force Materiel Command

Distribution:

To be distributed in accordance with the initial distribution number (IDN) 381020, requirements for TM 9-2320-387-24P.

RECOMMENDED CHANGES TO PUBLICATIONS AND BLANK FORMS For use of this form, see AR 25-30; the proponent agency is ODISC4.	Use Part II (reverse) for Repair Parts and Special Tools Lists (RPSTL) and Supply Catalogs/Supply Manuals (SC/SM).	**DATE:**

TO: *(Forward to proponent of publication or form) (include ZIP code)* AMSTA-LC-CI Tech Pubs, TACOM-RI 1 Rock Island Arsenal Rock Island, IL 61299-7630	**FROM:** *(Activity and location) (include ZIP code)*

PART I - ALL PUBLICATIONS (EXCEPT RPSTL AND SC/SM) AND BLANK FORMS

PUBLICATION/FORM NUMBER	DATE	TITLE

ITEM NO.	PAGE NO.	PARA-GRAPH	LINE NO.*	FIGURE NO.	TABLE NO.	RECOMMENDED CHANGES AND REASON *(Provide exact wording of recommended changes, if possible).*

SAMPLE

**Reference to line numbers within the paragraph or subparagraph.*

TYPED NAME, GRADE, OR TITLE	TELEPHONE EXCHANGE/AUTOVON, PLUS EXTENSION	SIGNATURE

TO: *(Forward direct to addressee listed in publication)*	**FROM:** *(Activity and location) (include ZIP code)*	**DATE:**
AMSTA-LC-CI Tech Pubs, TACOM-RI 1 Rock Island Arsenal Rock Island, IL 61299-7630	Co. B, 1st BN, 2nd Brigade Ft. Hood, TX 76445	14 Dec 2001

PART II - REPAIR PARTS AND SPECIAL TOOLS LISTS AND SUPPLY CATALOGS/SUPPLY MANUALS

PUBLICATION/FORM NUMBER	DATE	TITLE
TM 9-2320-387-24P	**31 MARCH 2002**	**TECHNICAL MANUAL, UNIT, DIRECT SUPPORT AND GENERAL SUPPORT MAINTENANCE REPAIR PARTS AND SPECIAL TOOLS LIST**

PAGE NO.	COLM NO.	LINE NO.	NATIONAL STOCK NUMBER	REFERENCE NO.	FIGURE NO.	ITEM NO.	TOTAL NO. OF MAJOR ITEMS SUPPORTED	RECOMMENDED ACTION
0052 00-1	5	24	5310-00-696-5172	271168	51	24	2	Change part number to read 271166.

SAMPLE

PART III - REMARKS *(Any general remarks or recommendations, or suggestions for improvement of publications and blank forms. Additional blank sheets may be used if more space is needed.)*

TYPED NAME, GRADE, OR TITLE	TELEPHONE EXCHANGE/AUTOVON, PLUS EXTENSION	SIGNATURE

RECOMMENDED CHANGES TO PUBLICATIONS AND BLANK FORMS For use of this form, see AR 25-30; the proponent agency is ODISC4.	Use Part II (reverse) for Repair Parts and Special Tools Lists (RPSTL) and Supply Catalogs/Supply Manuals (SC/SM).	**DATE:**

TO: *(Forward to proponent of publication or form) (include ZIP code)* AMSTA-LC-CI Tech Pubs, TACOM-RI 1 Rock Island Arsenal Rock Island, IL 61299-7630	**FROM:** *(Activity and location) (include ZIP code)*

PART I - ALL PUBLICATIONS (EXCEPT RPSTL AND SC/SM) AND BLANK FORMS

PUBLICATION/FORM NUMBER	DATE	TITLE

ITEM NO.	PAGE NO.	PARA-GRAPH	LINE NO.*	FIGURE NO.	TABLE NO.	RECOMMENDED CHANGES AND REASON *(Provide exact wording of recommended changes, if possible).*

**Reference to line numbers within the paragraph or subparagraph.*

TYPED NAME, GRADE, OR TITLE	TELEPHONE EXCHANGE/AUTOVON, PLUS EXTENSION	SIGNATURE

TO: *(Forward direct to addressee listed in publication)*	**FROM:** *(Activity and location)* *(include ZIP code)*	**DATE:**
AMSTA-LC-CI Tech Pubs, TACOM-RI 1 Rock Island Arsenal Rock Island, IL 61299-7630		

PART II - REPAIR PARTS AND SPECIAL TOOLS LISTS AND SUPPLY CATALOGS/SUPPLY MANUALS

PUBLICATION/FORM NUMBER	DATE	TITLE
TM 9-2320-387-24P	**31 MARCH 2002**	**TECHNICAL MANUAL, UNIT, DIRECT SUPPORT AND GENERAL SUPPORT MAINTENANCE REPAIR PARTS AND SPECIAL TOOLS LIST**

PAGE NO.	COLM NO.	LINE NO.	NATIONAL STOCK NUMBER	REFERENCE NO.	FIGURE NO.	ITEM NO.	TOTAL NO. OF MAJOR ITEMS SUPPORTED	RECOMMENDED ACTION

PART III - REMARKS *(Any general remarks or recommendations, or suggestions for improvement of publications and blank forms. Additional blank sheets may be used if more space is needed.)*

TYPED NAME, GRADE, OR TITLE	TELEPHONE EXCHANGE/AUTOVON, PLUS EXTENSION	SIGNATURE

USAPPC V3.00

PIN: 077076-000